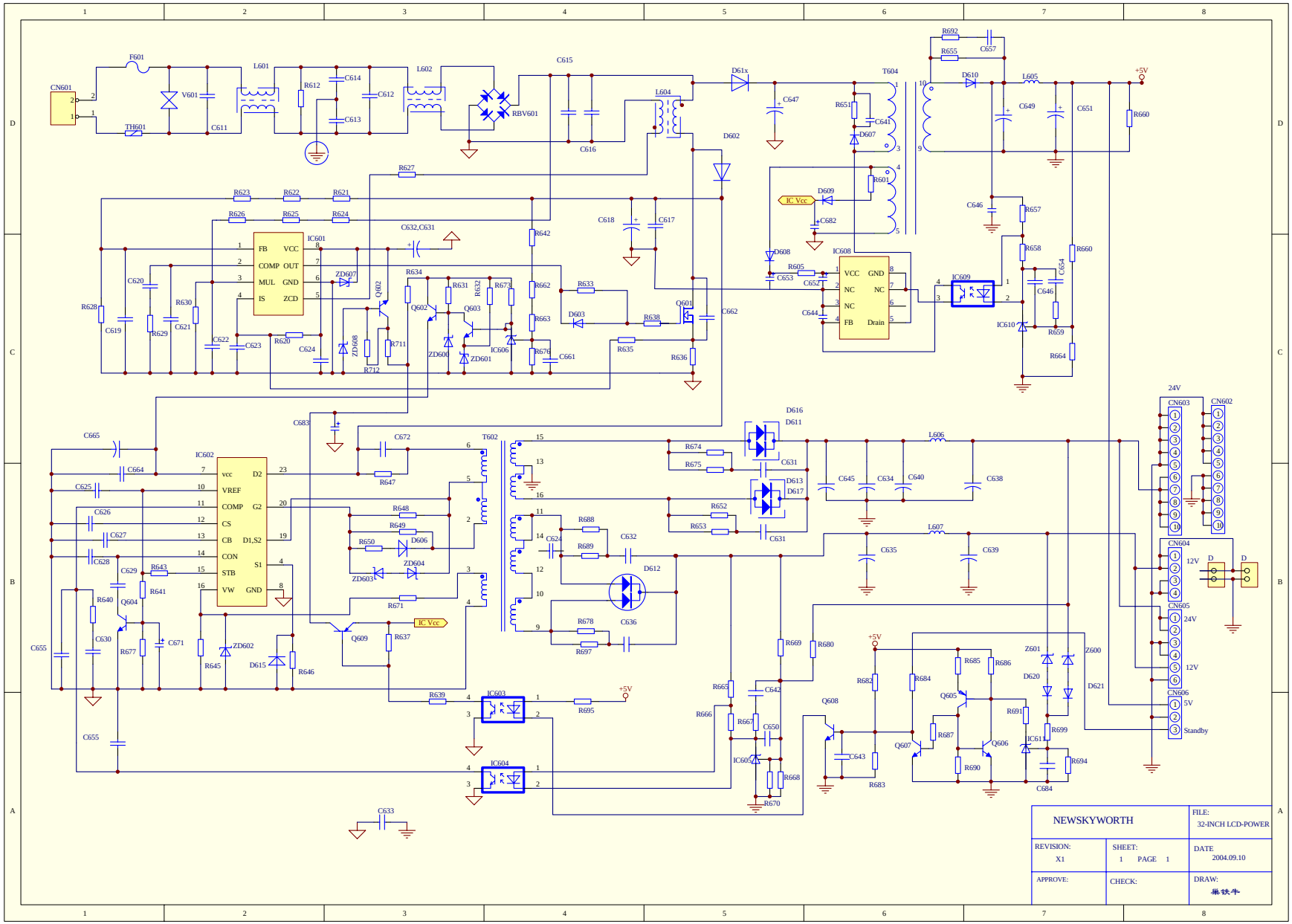
CN601
F601
TH601
V601
C611
L601
R612
C614
C613
C612
L602
RBV601
C615
C616
L604
D61x
D602
C647
T604
R651
C641
D607
R692
R655
C657
D610
L605
C649
C651
R660
+5V
R627
R623
R622
R621
R626
R625
R624
C632,C631
IC601
FB
COMP
MUL
IS
VCC
OUT
GND
ZCD
ZD607
Q602
R634
Q602
R631
R632
Q603
R673
R662
R663
R676
C661
R642
R633
D603
R638
Q601
C662
R635
R636
C618
C617
R628
C619
C620
R629
R630
C621
C622
C623
R620
C624
ZD608
R712
R711
ZD600
ZD601
IC606
IC Vcc
D609
C682
D608
R605
C653
C652
C644
IC608
VCC
NC
NC
FB
GND
NC
Drain
IC609
IC610
R601
C646
R657
R658
C654
C646
R659
R664
R660
C683
C665
C664
C625
C626
C627
C628
C629
R643
R641
Q604
R640
C630
R677
C671
C655
C655
IC602
vcc
VREF
COMP
CS
CB
CON
STB
VW
D2
G2
D1,S2
S1
GND
C672
R647
T602
R648
R649
R650
D606
ZD603
ZD604
R671
IC Vcc
Q609
R637
R645
ZD602
D615
R646
R639
IC603
IC604
R695
+5V
C633
D616
D611
R674
R675
C631
D613
D617
R652
R653
C631
L606
C645
C634
C640
C638
L607
C635
C639
R688
C624
R689
C632
D612
R678
C636
R697
R669
R680
R665
R666
C642
R667
C650
IC605
R668
R670
+5V
R682
R684
R685
R686
Q605
Q606
Q607
R687
R690
R691
IC611
R699
R694
C684
Q608
C643
R683
Z601
Z600
D620
D621
24V
CN603
CN602
CN604
12V
D
D
CN605
24V
12V
CN606
5V
Standby
NEWSKYWORTH
FILE:
32-INCH LCD-POWER
REVISION:
X1
SHEET:
1 PAGE 1
DATE
2004.09.10
APPROVE:
CHECK:
DRAW:
巢铁牛