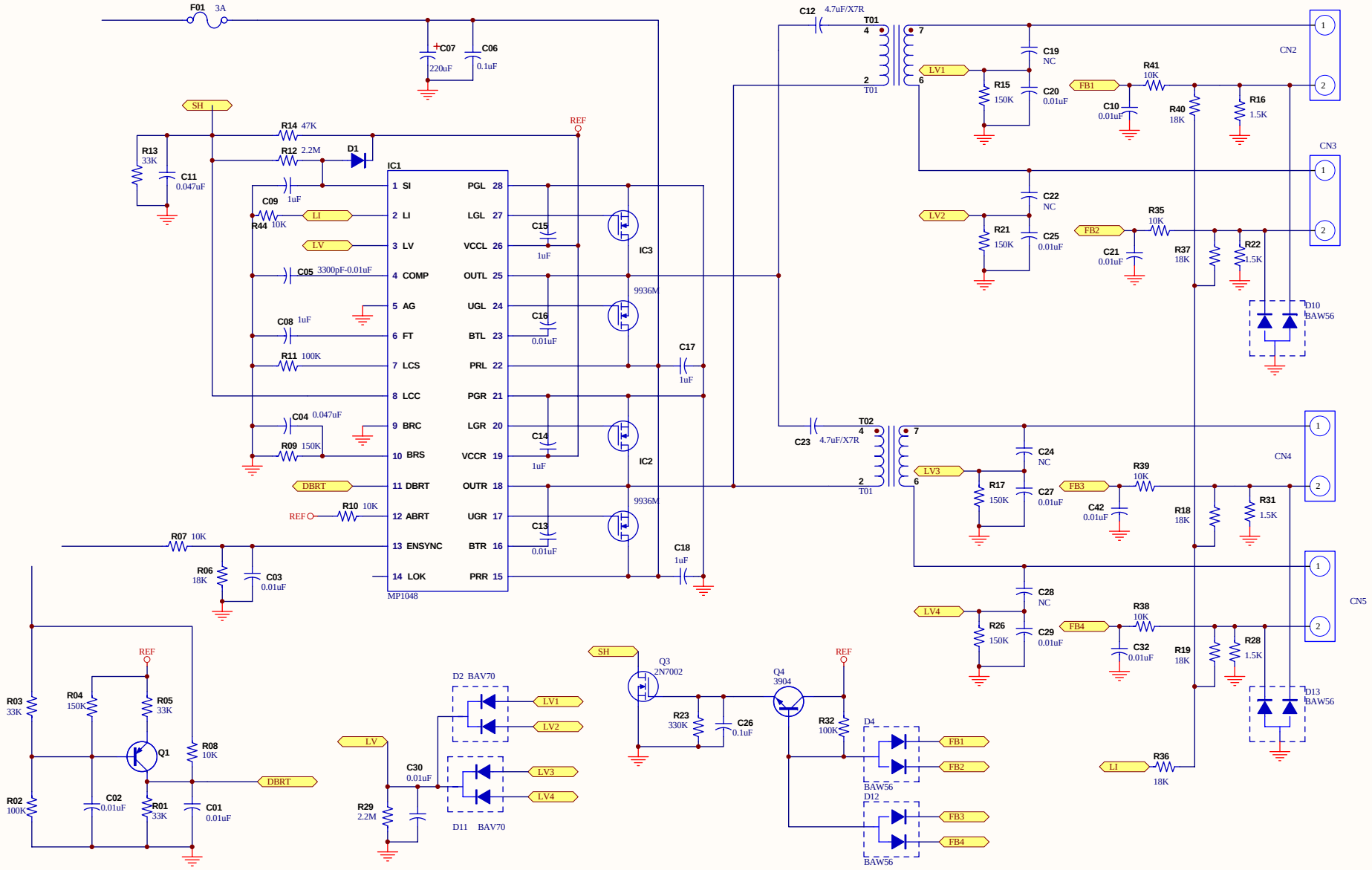

Title		
Size A3	Number	Revision
Date: 3-Dec-2007	Sheet of	
File: G:\研档专用\168P-P19TBN-00 534L-0919 Drawn By: \G1D0-P19TJM00000-0000.DDB		