COMPAL CONFIDENTIAL

MODEL NAME : ***JBL01***

PCB NO : ***LA-3803P (DAA00000O1L)***

BOM P/N : ***43152231L01***

M09 Roush DIS

uFCPGA Mobile Penryn
Intel Cantiga PM + ICH9M

2008-06-12

REV : 1.0(A00)

@ : Nopop Component
1@ : Use PCMCIA card only
2@ : Use Express card only
4@ : Use CHINA TPM only
5@ : Use Broadcom TPM only
6@ : All TPM Disabled for CCC - Depop D70, Pop R483

MB PCB

Part Number	Description
DAA0000000L	PCB 03J LA-3803P REV0 M/B DIS

PROPRIETARY NOTE: THIS SHEET OF ENGINEERING DRAWING AND SPECIFICATIONS CONTAINS CONFIDENTIAL TRADE SECRET AND OTHER PROPRIETARY INFORMATION OF DELL INC. ("DELL") THIS DOCUMENT MAY NOT BE TRANSFERRED OR COPIED WITHOUT THE EXPRESS WRITTEN AUTHORIZATION OF DELL. IN ADDITION, NEITHER THIS SHEET NOR THE INFORMATION IT CONTAINS WAY BE USED BY OR DISCLOSED TO ANY THIRD PARTY WITHOUT DELL'S EXPRESS WRITTEN CONSENT.

DELL CONFIDENTIAL/PROPRIETARY

Compal Electronics, Inc.

Title: Cover Sheet		
Size	Document Number: LA-3803P	Rev 0.8
Date: Thursday, June 12, 2008	Sheet 1 of 71	

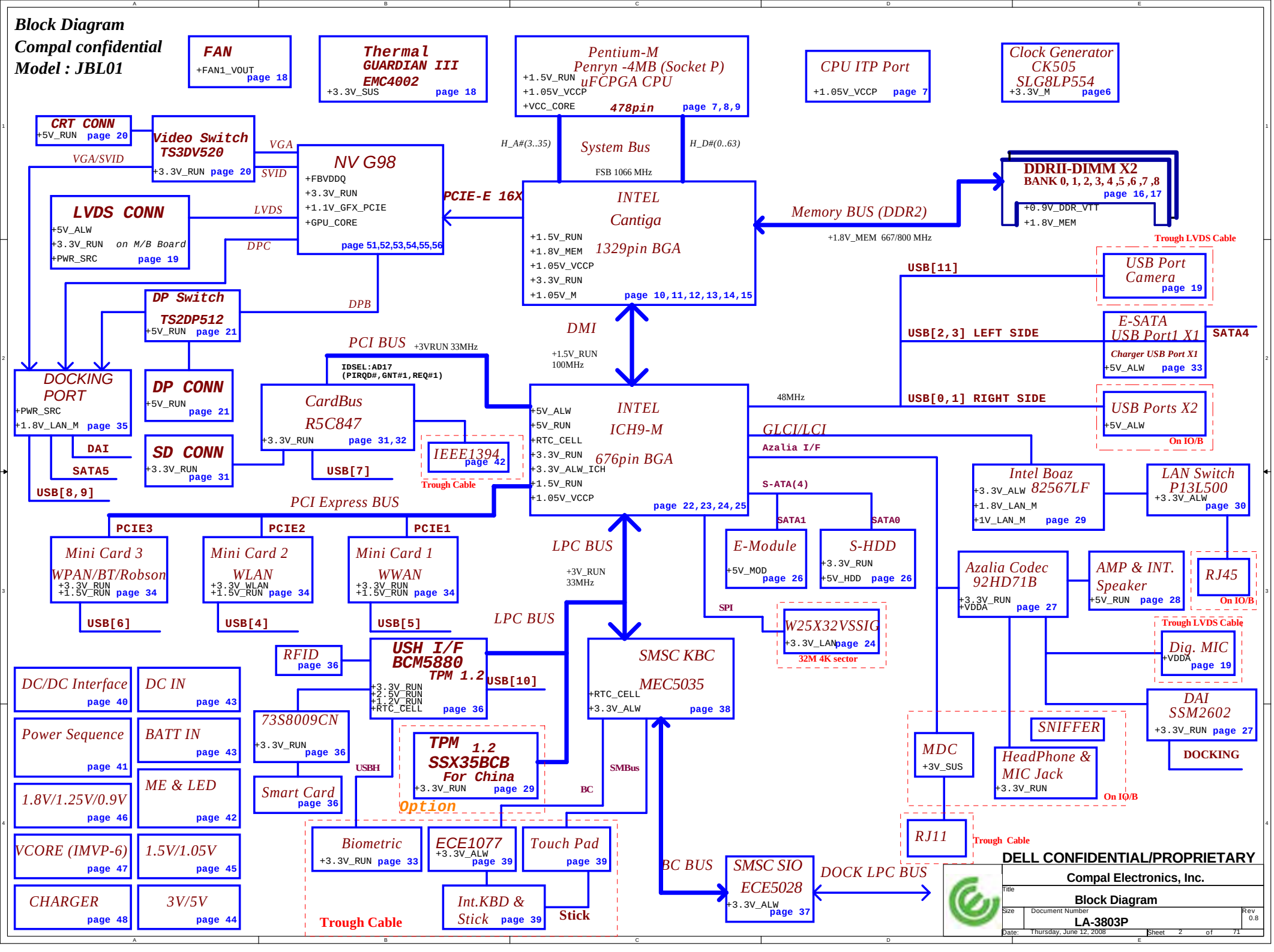
Block Diagram
Compal confidential
Model : JBL01
FAN
+FAN1_VOUT
page 18
Thermal
GUARDIAN III
EMC4002
+3.3V_SUS
page 18
Pentium-M
Penryn -4MB (Socket P)
uFCPGA CPU
+1.5V_RUN
+1.05V_VCCP
+VCC_CORE
478pin
page 7,8,9
CPU ITP Port
+1.05V_VCCP
page 7
Clock Generator
CK505
SLG8LP554
+3.3V_M
page6
CRT CONN
+5V_RUN
page 20
Video Switch
TS3DV520
+3.3V_RUN
page 20
VGA
VGA/SVID
SVID
NV G98
+FBVDDQ
+3.3V_RUN
+1.1V_GFX_PCIE
+GPU_CORE
page 51,52,53,54,55,56
PCIE-E 16X
H_A#(3..35)
System Bus
H_D#(0..63)
FSB 1066 MHz
DDRII-DIMM X2
BANK 0, 1, 2, 3, 4 ,5 ,6 ,7 ,8
page 16,17
+0.9V_DDR_VTT
+1.8V_MEM
LVDS CONN
+5V_ALW
+3.3V_RUN
on M/B Board
+PWR_SRC
page 19
LVDS
DPC
INTEL
Cantiga
1329pin BGA
+1.5V_RUN
+1.8V_MEM
+1.05V_VCCP
+3.3V_RUN
+1.05V_M
page 10,11,12,13,14,15
Memory BUS (DDR2)
+1.8V_MEM 667/800 MHz
Trough LVDS Cable
USB[11]
USB Port
Camera
page 19
DP Switch
TS2DP512
+5V_RUN
page 21
DPB
DMI
+1.5V_RUN
100MHz
USB[2,3] LEFT SIDE
E-SATA
USB Port1 X1
Charger USB Port X1
+5V_ALW
page 33
SATA4
PCI BUS
+3VRUN 33MHz
IDSEL:AD17
(PIRQD#,GNT#1,REQ#1)
DOCKING
PORT
+PWR_SRC
+1.8V_LAN_M
page 35
DAI
SATA5
USB[8,9]
DP CONN
+5V_RUN
page 21
CardBus
R5C847
+3.3V_RUN
page 31,32
USB[7]
IEEE1394
page 42
Trough Cable
SD CONN
+3.3V_RUN
page 31
INTEL
ICH9-M
676pin BGA
+5V_ALW
+5V_RUN
+RTC_CELL
+3.3V_RUN
+3.3V_ALW_ICH
+1.5V_RUN
+1.05V_VCCP
page 22,23,24,25
48MHz
USB[0,1] RIGHT SIDE
USB Ports X2
+5V_ALW
On IO/B
GLCI/LCI
Azalia I/F
Intel Boaz
82567LF
+3.3V_ALW
+1.8V_LAN_M
+1V_LAN_M
page 29
LAN Switch
P13L500
+3.3V_ALW
page 30
S-ATA(4)
PCI Express BUS
PCIE3
PCIE2
PCIE1
Mini Card 3
WPAN/BT/Robson
+3.3V_RUN
+1.5V_RUN
page 34
Mini Card 2
WLAN
+3.3V_WLAN
+1.5V_RUN
page 34
Mini Card 1
WWAN
+3.3V_RUN
+1.5V_RUN
page 34
LPC BUS
+3V_RUN
33MHz
SATA1
SATA0
E-Module
+5V_MOD
page 26
S-HDD
+3.3V_RUN
+5V_HDD
page 26
Azalia Codec
92HD71B
+3.3V_RUN
+VDDA
page 27
AMP & INT.
Speaker
+5V_RUN
page 28
RJ45
On IO/B
USB[6]
USB[4]
USB[5]
LPC BUS
SPI
W25X32VSSIG
+3.3V_LAN
page 24
32M 4K sector
Trough LVDS Cable
Dig. MIC
+VDDA
page 19
RFID
page 36
USH I/F
BCM5880
TPM 1.2
+3.3V_RUN
+2.5V_RUN
+1.2V_RUN
+RTC_CELL
page 36
USB[10]
SMSC KBC
MEC5035
+RTC_CELL
+3.3V_ALW
page 38
DC/DC Interface
page 40
DC IN
page 43
73S8009CN
+3.3V_RUN
page 36
Smart Card
page 36
USBH
TPM 1.2
SSX35BCB
For China
+3.3V_RUN
page 29
Option
BC
SMBus
DAI
SSM2602
+3.3V_RUN
page 27
DOCKING
Power Sequence
page 41
BATT IN
page 43
ME & LED
page 42
1.8V/1.25V/0.9V
page 46
VCORE (IMVP-6)
page 47
1.5V/1.05V
page 45
CHARGER
page 48
3V/5V
page 44
SNIFFER
MDC
+3V_SUS
HeadPhone &
MIC Jack
+3.3V_RUN
On IO/B
RJ11
Trough Cable
Biometric
+3.3V_RUN
page 33
ECE1077
+3.3V_ALW
page 39
Touch Pad
page 39
Int.KBD &
Stick
page 39
Stick
Trough Cable
BC BUS
SMSC SIO
ECE5028
+3.3V_ALW
page 37
DOCK LPC BUS
DELL CONFIDENTIAL/PROPRIETARY
Compal Electronics, Inc.
Title
Block Diagram
Size
Document Number
LA-3803P
Rev
0.8
Date:
Thursday, June 12, 2008
Sheet
2
of
71

POWER STATES

State \ Signal	SLP S3#	SLP S4#	SLP S5#	S4 STATE#	SLP M#	ALWAYS PLANE	M PLANE	SUS PLANE	RUN PLANE	CLOCKS
S0 (Full ON) / M0	HIGH	HIGH	HIGH	HIGH	HIGH	ON	ON	ON	ON	ON
S3 (Suspend to RAM) / M1	LOW	HIGH	HIGH	HIGH	HIGH	ON	ON	ON	OFF	ON
S4 (Suspend to DISK) / M1	LOW	HIGH	HIGH	LOW	HIGH	ON	ON	ON	OFF	ON
S5 (SOFT OFF) / M1	LOW	HIGH	LOW	LOW	HIGH	ON	ON	ON	OFF	ON
S3 (Suspend to RAM) / M-OFF	LOW	HIGH	HIGH	HIGH	LOW	ON	OFF	ON	OFF	OFF
S4 (Suspend to DISK) / M-OFF	LOW	LOW	HIGH	LOW	LOW	ON	OFF	OFF	OFF	OFF
S5 (SOFT OFF) / M-OFF	LOW	LOW	LOW	LOW	LOW	ON	OFF	OFF	OFF	OFF

PM TABLE

State \ power plane	+15V_ALW +5V_ALW +3.3V_ALW_ICH +3.3V_RTC_LDO	+3.3V_SUS +1.8V_MEM	+5V_RUN +3.3V_RUN +1.8V_RUN +1.5V_RUN +0.9V_DDR_VTT +GPU_CORE +VCC_CORE +1.05V_VCCP +FBVDDQ	+3.3V_M +1.05V_M	+3.3V_M +1.05V_M (M-OFF)
S0	ON	ON	ON	ON	ON
S3	ON	ON	OFF	ON	OFF
S5 S4/AC	ON	OFF	OFF	ON	OFF
S5 S4/AC don't exist	OFF	OFF	OFF	OFF	OFF

PCI TABLE

PCI DEVICE	IDSEL	REQ#/GNT#	PIRQ
R5C847	AD17	REQ#1 / GNT#1	PIRQ[B..D]

	USB PORT#	DESTINATION
ICH9-M	0	JUSB1 (Ext Right Side Top)
	1	JUSB1 (Ext Right Side Bottom)
	2	JESA1 (Ext Left Side Top)
	3	JESA1 (Ext Left Side Bottom)
	4	WLAN
	5	WWAN
	6	WPAN
	7	Card Bus/Express card
	8	DOCKING
	9	DOCKING
	10	USH->BIO
	11	Camera

PCI EXPRESS	DESTINATION
Lane 1	MINI CARD-1 WWAN
Lane 2	MINI CARD-2 WLAN
Lane 3	MINI CARD-3 BT/UWB
Lane 4	EXPRESS CARD
Lane 5	None
Lane 6	10/100/1G LAN

PROPRIETARY NOTE: THIS SHEET OF ENGINEERING DRAWING AND SPECIFICATIONS CONTAINS CONFIDENTIAL TRADE SECRET AND OTHER PROPRIETARY INFORMATION OF DELL INC. ("DELL") THIS DOCUMENT MAY NOT BE TRANSFERRED OR COPIED WITHOUT THE EXPRESS WRITTEN AUTHORIZATION OF DELL. IN ADDITION, NEITHER THIS SHEET NOR THE INFORMATION IT CONTAINS WAY BE USED BY OR DISCLOSED TO ANY THIRD PARTY WITHOUT DELL'S EXPRESS WRITTEN CONSENT.

DELL CONFIDENTIAL/PROPRIETARY

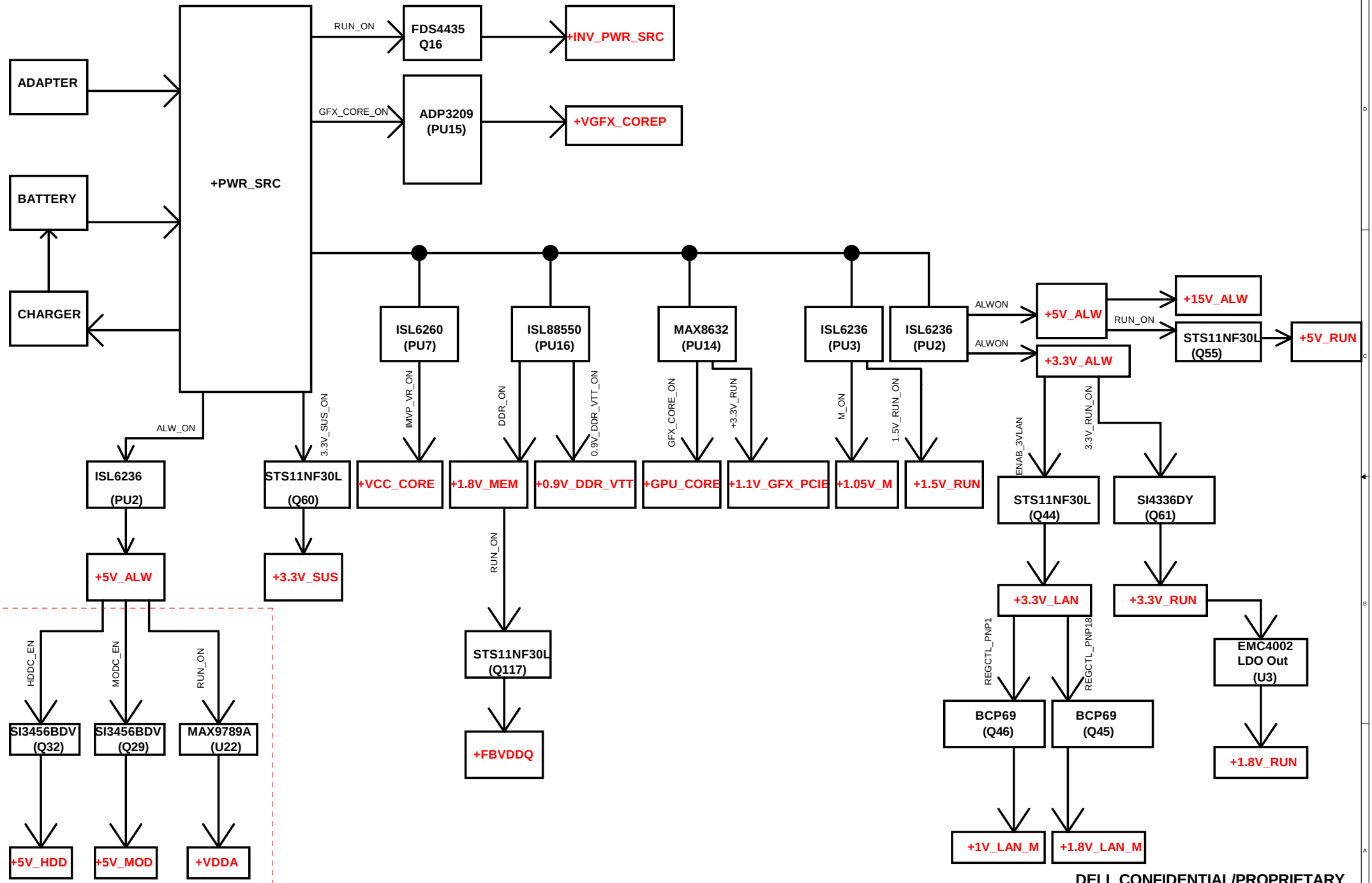

DELL CONFIDENTIAL/PROPRIETARY

PROPRIETARY NOTE: THIS SHEET OF ENGINEERING DRAWING AND SPECIFICATIONS CONTAINS CONFIDENTIAL TRADE SECRET AND OTHER PROPRIETARY INFORMATION OF DELL INC. ("DELL") THIS DOCUMENT MAY NOT BE TRANSFERRED OR COPIED WITHOUT THE EXPRESS WRITTEN AUTHORIZATION OF DELL. IN ADDITION, NEITHER THIS SHEET NOR THE INFORMATION IT CONTAINS WAY BE USED BY OR DISCLOSED TO ANY THIRD PARTY WITHOUT DELL'S EXPRESS WRITTEN CONSENT.

Compal Electronics, Inc.

Title: Power Rail

Size | Document Number: LA-3803P | Rev: 0.8

Date: Thursday, June 12, 2008 | Sheet 4 of 71

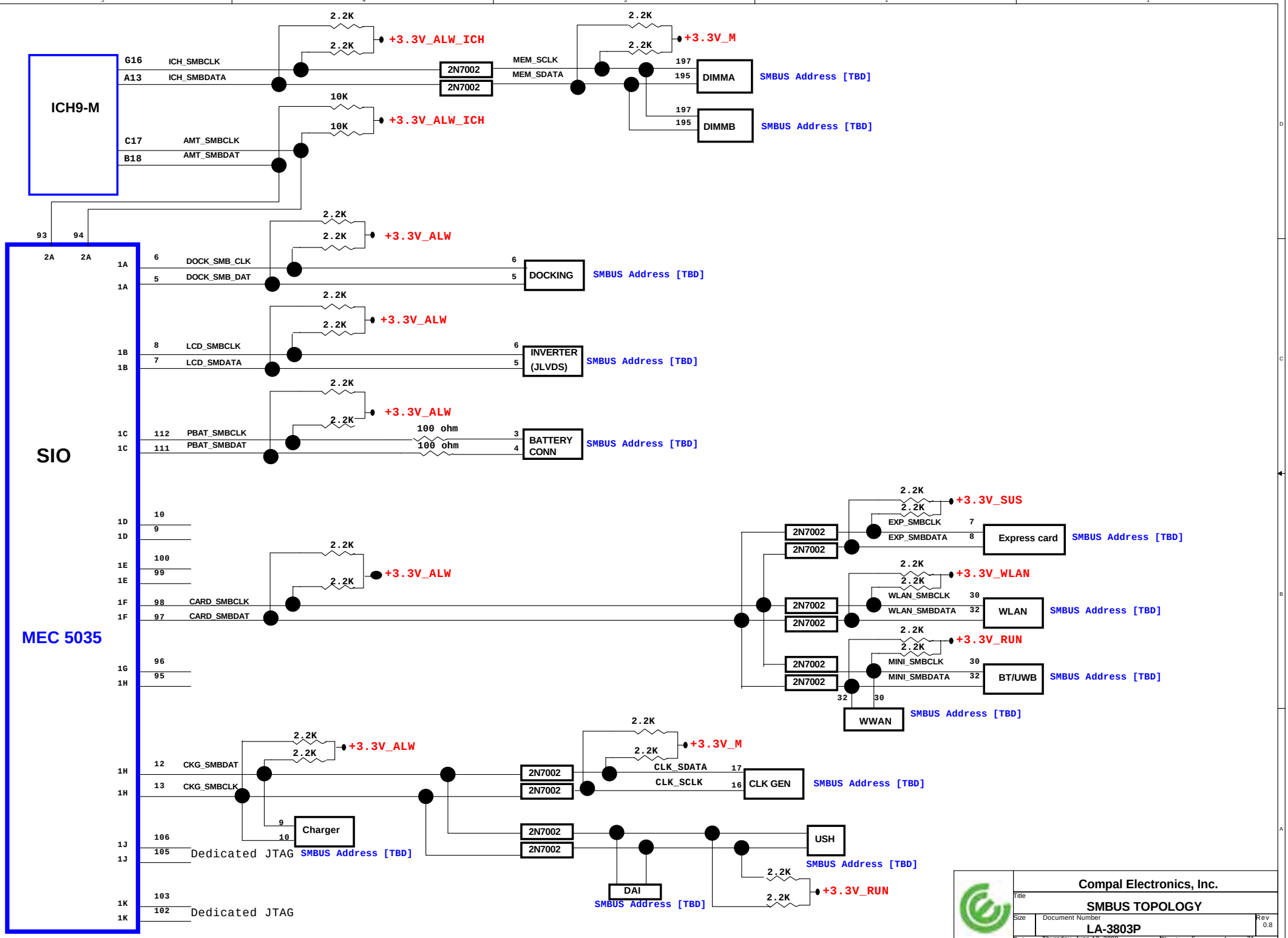

Compal Electronics, Inc.

Title: SMBUS TOPOLOGY

Size | Document Number: LA-3803P | Rev 0.8

Date: Thursday, June 12, 2008 | Sheet 5 of 71

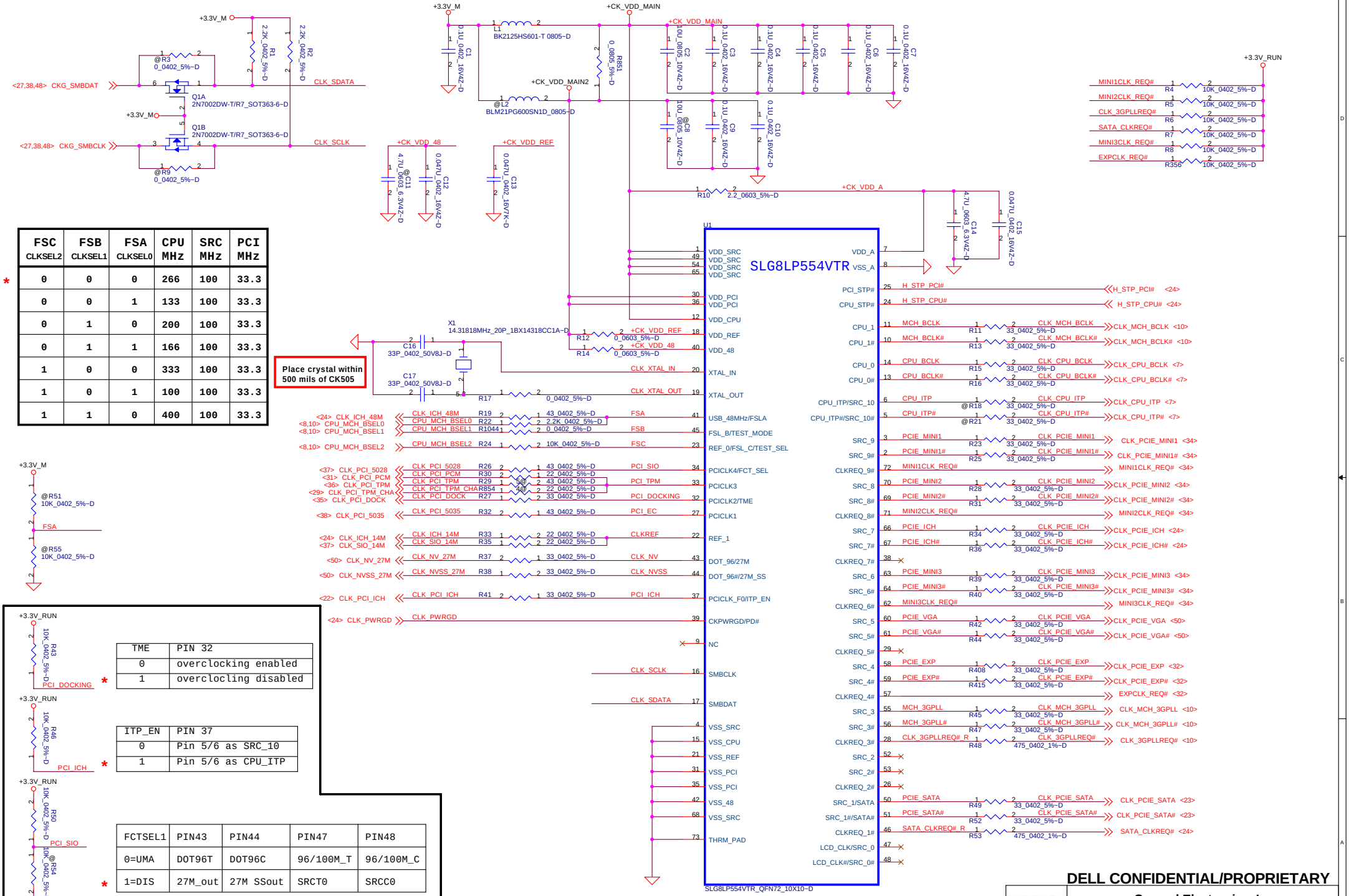

FSC CLKSEL2	FSB CLKSEL1	FSA CLKSEL0	CPU MHz	SRC MHz	PCI MHz
* 0	0	0	266	100	33.3
0	0	1	133	100	33.3
0	1	0	200	100	33.3
0	1	1	166	100	33.3
1	0	0	333	100	33.3
1	0	1	100	100	33.3
1	1	0	400	100	33.3

TME	PIN 32
0	overclocking enabled
* 1	overclocling disabled

ITP_EN	PIN 37
0	Pin 5/6 as SRC_10
* 1	Pin 5/6 as CPU_ITP

FCTSEL1	PIN43	PIN44	PIN47	PIN48
0=UMA	DOT96T	DOT96C	96/100M_T	96/100M_C
* 1=DIS	27M_out	27M SSout	SRCT0	SRCC0

0=UMA
1=Disc. GRFX down

PROPRIETARY NOTE: THIS SHEET OF ENGINEERING DRAWING AND SPECIFICATIONS CONTAINS CONFIDENTIAL TRADE SECRET AND OTHER PROPRIETARY INFORMATION OF DELL INC. ("DELL") THIS DOCUMENT MAY NOT BE TRANSFERRED OR COPIED WITHOUT THE EXPRESS WRITTEN AUTHORIZATION OF DELL. IN ADDITION, NEITHER THIS SHEET NOR THE INFORMATION IT CONTAINS WAY BE USED BY OR DISCLOSED TO ANY THIRD PARTY WITHOUT DELL'S EXPRESS WRITTEN CONSENT.

DELL CONFIDENTIAL/PROPRIETARY

Compal Electronics, Inc.

Title: Clock Generator

Size: | Document Number: LA-3803P | Rev: 0.8

Date: Thursday, June 12, 2008 | Sheet 6 of 71

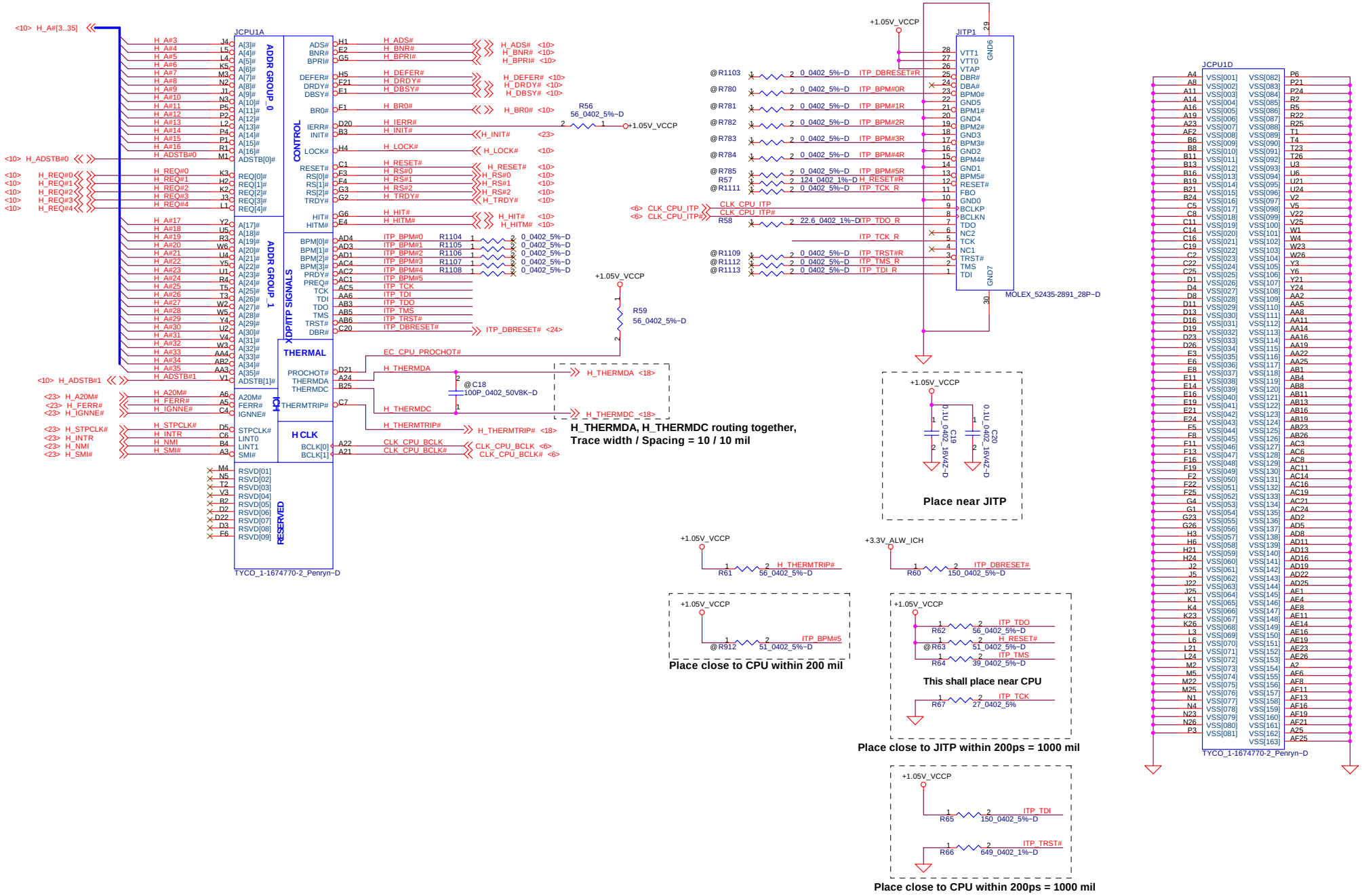

PROPRIETARY NOTE: THIS SHEET OF ENGINEERING DRAWING AND SPECIFICATIONS CONTAINS CONFIDENTIAL TRADE SECRET AND OTHER PROPRIETARY INFORMATION OF DELL INC. ("DELL") THIS DOCUMENT MAY NOT BE TRANSFERRED OR COPIED WITHOUT THE EXPRESS WRITTEN AUTHORIZATION OF DELL. IN ADDITION, NEITHER THIS SHEET NOR THE INFORMATION IT CONTAINS WAY BE USED BY OR DISCLOSED TO ANY THIRD PARTY WITHOUT DELL'S EXPRESS WRITTEN CONSENT.

DELL CONFIDENTIAL/PROPRIETARY

Compal Electronics, Inc.

Title: Penryn Processor(1/2)

Size: | Document Number: LA-3803P | Rev: 0.8

Date: Thursday, June 12, 2008 | Sheet 7 of 71

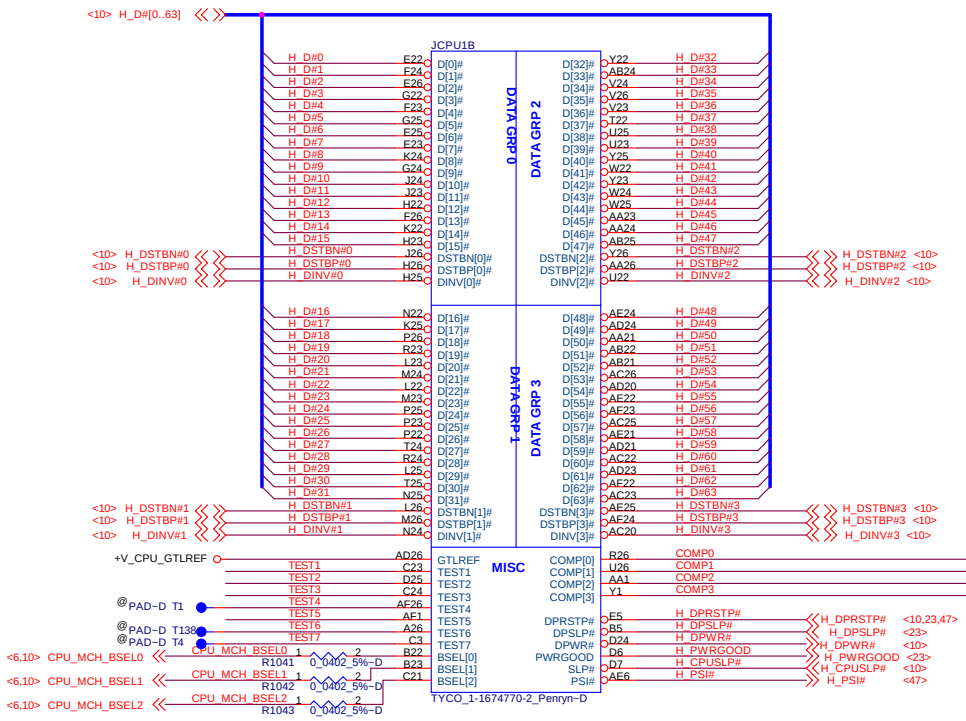

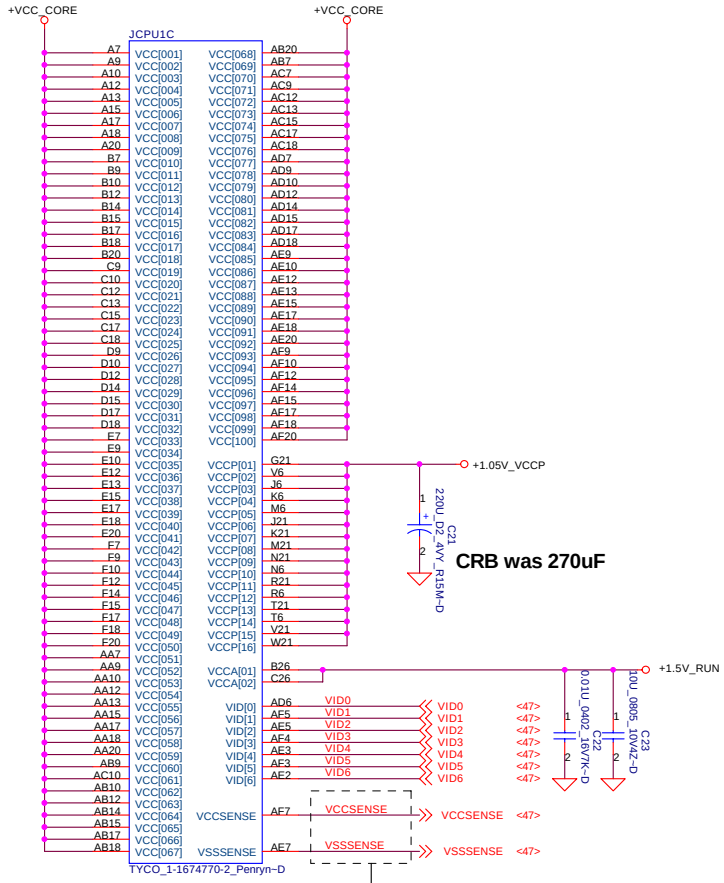

Resistor placed within 0.5" of CPU pin.Trace should be at least 25 mils away from any other toggling signal. COMP0, COMP2 trace should be 27.4 ohm. COMP1, COMP3 should be 55 ohm.

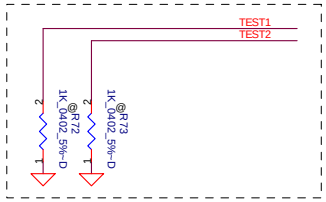

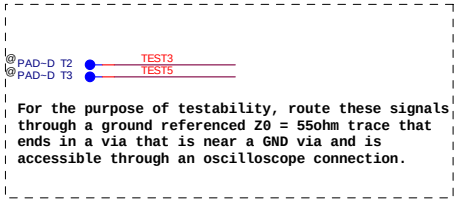

For the purpose of testability, route these signals through a ground referenced Z0 = 55ohm trace that ends in a via that is near a GND via and is accessible through an oscilloscope connection.

FSB	BCLK	BSEL2	BSEL1	BSEL0
533	133	0	0	1
667	166	0	1	1
800	200	0	1	0
1067	266	0	0	0

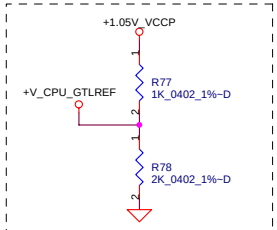

Layout close CPU PIN AD26 55 ohm, 0.5 inch (max)

Place R75 and R76 near CPU

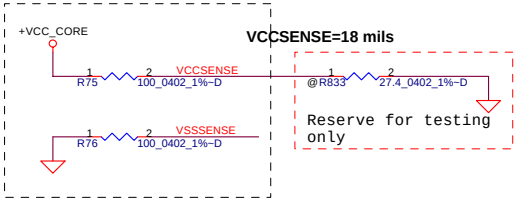

Route VCCSENSE and VSSSENSE trace at 27.4 ohms, 7 mils spacing and R75 & R76 keep to pad max 1 inch

PROPRIETARY NOTE: THIS SHEET OF ENGINEERING DRAWING AND SPECIFICATIONS CONTAINS CONFIDENTIAL TRADE SECRET AND OTHER PROPRIETARY INFORMATION OF DELL INC. ("DELL") THIS DOCUMENT MAY NOT BE TRANSFERRED OR COPIED WITHOUT THE EXPRESS WRITTEN AUTHORIZATION OF DELL. IN ADDITION, NEITHER THIS SHEET NOR THE INFORMATION IT CONTAINS WAY BE USED BY OR DISCLOSED TO ANY THIRD PARTY WITHOUT DELL'S EXPRESS WRITTEN CONSENT.

DELL CONFIDENTIAL/PROPRIETARY

Compal Electronics, Inc.

Title: Penryn Processor(2/2)

Size: | Document Number: LA-3803P | Rev: 0.8

Date: Thursday, June 12, 2008 | Sheet 8 of 71

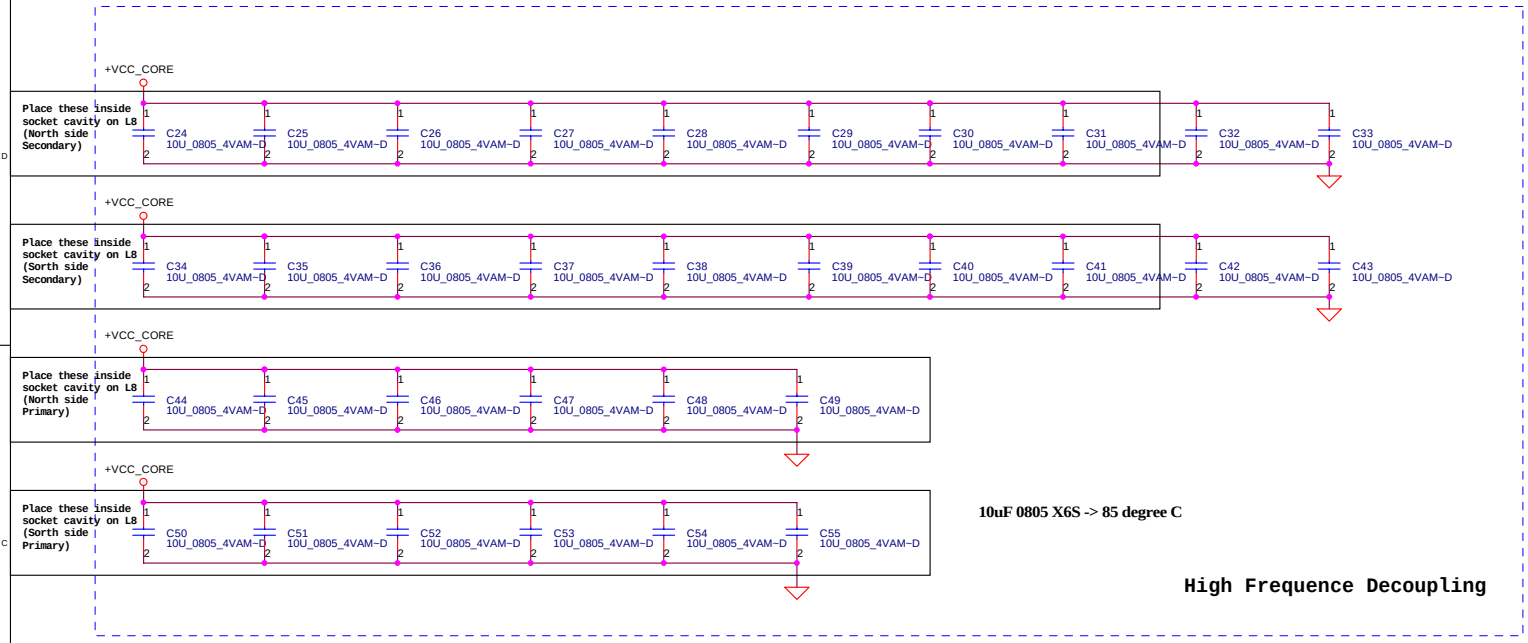

10uF 0805 X6S -> 85 degree C

High Frequence Decoupling

Near VCORE regulator.

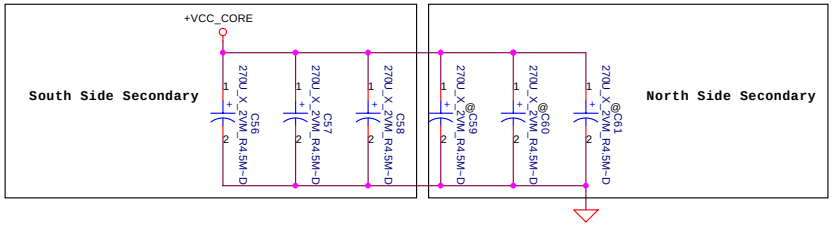

ESR <= 1.5m ohm
Capacitor > 1320uF

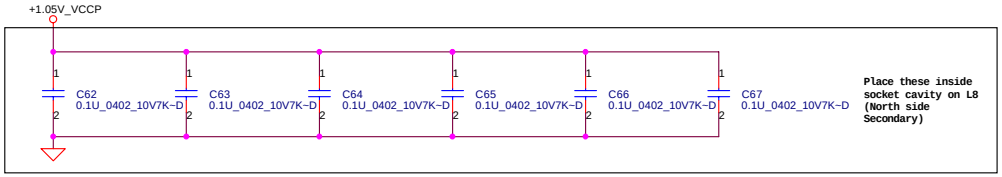

DELL CONFIDENTIAL/PROPRIETARY

PROPRIETARY NOTE: THIS SHEET OF ENGINEERING DRAWING AND SPECIFICATIONS CONTAINS CONFIDENTIAL TRADE SECRET AND OTHER PROPRIETARY INFORMATION OF DELL INC. ("DELL") THIS DOCUMENT MAY NOT BE TRANSFERRED OR COPIED WITHOUT THE EXPRESS WRITTEN AUTHORIZATION OF DELL. IN ADDITION, NEITHER THIS SHEET NOR THE INFORMATION IT CONTAINS WAY BE USED BY OR DISCLOSED TO ANY THIRD PARTY WITHOUT DELL'S EXPRESS WRITTEN CONSENT.

Compal Electronics, Inc.

Title: CPU Bypass

Size: | Document Number: LA-3803P | Rev: 0.8

Date: Thursday, June 12, 2008 | Sheet 9 of 71

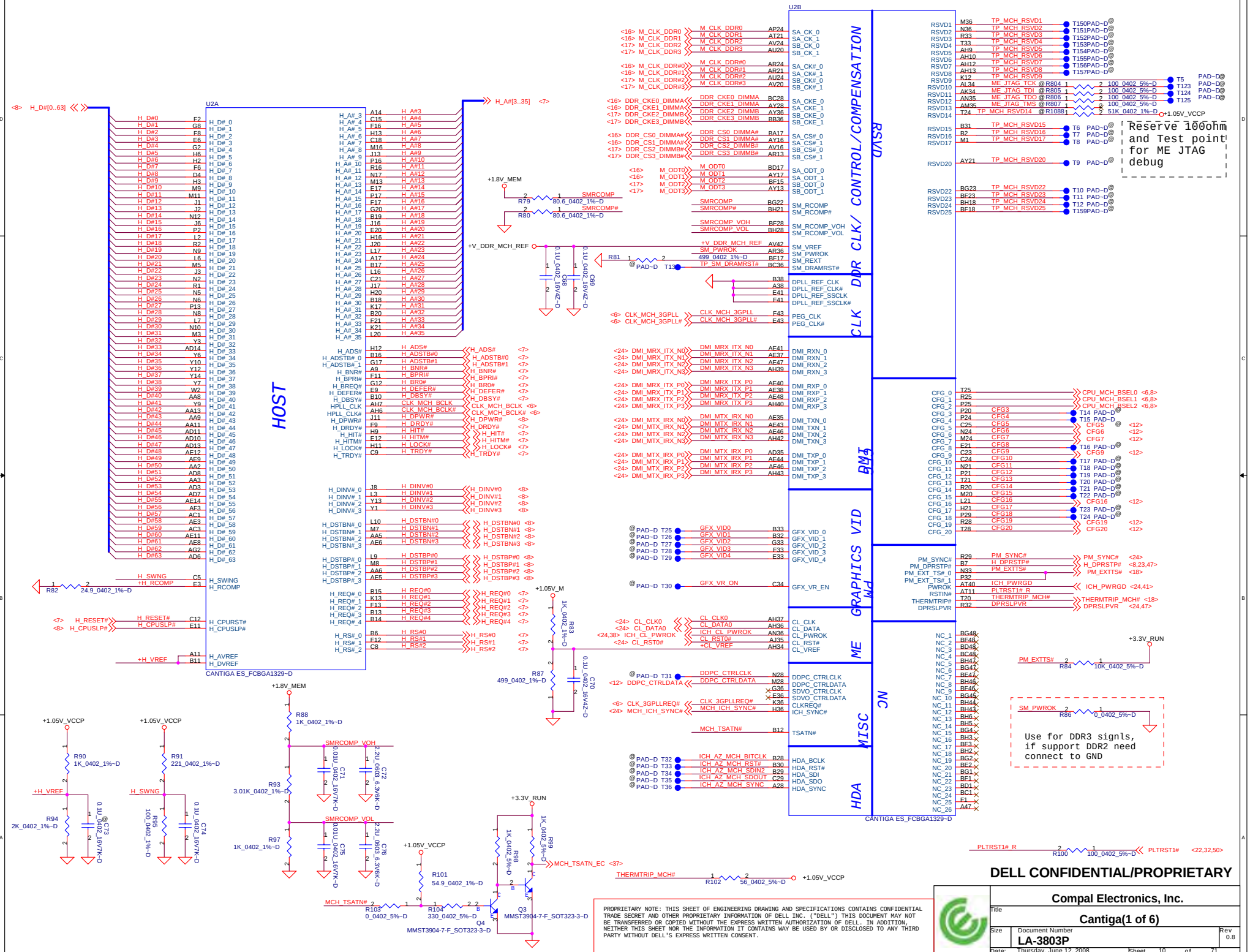
U2B
U2A
HOST
DDR CLK/ CONTROL/COMPENSATION
RSVD
CLK
DMI
GRAPHICS VID
PM
ME
MISC
NC
HDA
CANTIGA ES_FCBGA1329~D
Reserve 100ohm and Test point for ME JTAG debug
Use for DDR3 signls, if support DDR2 need connect to GND
DELL CONFIDENTIAL/PROPRIETARY
Compal Electronics, Inc.
Title
Cantiga(1 of 6)
Size
Document Number
LA-3803P
Rev
0.8
Date: Thursday, June 12, 2008
Sheet 10 of 71

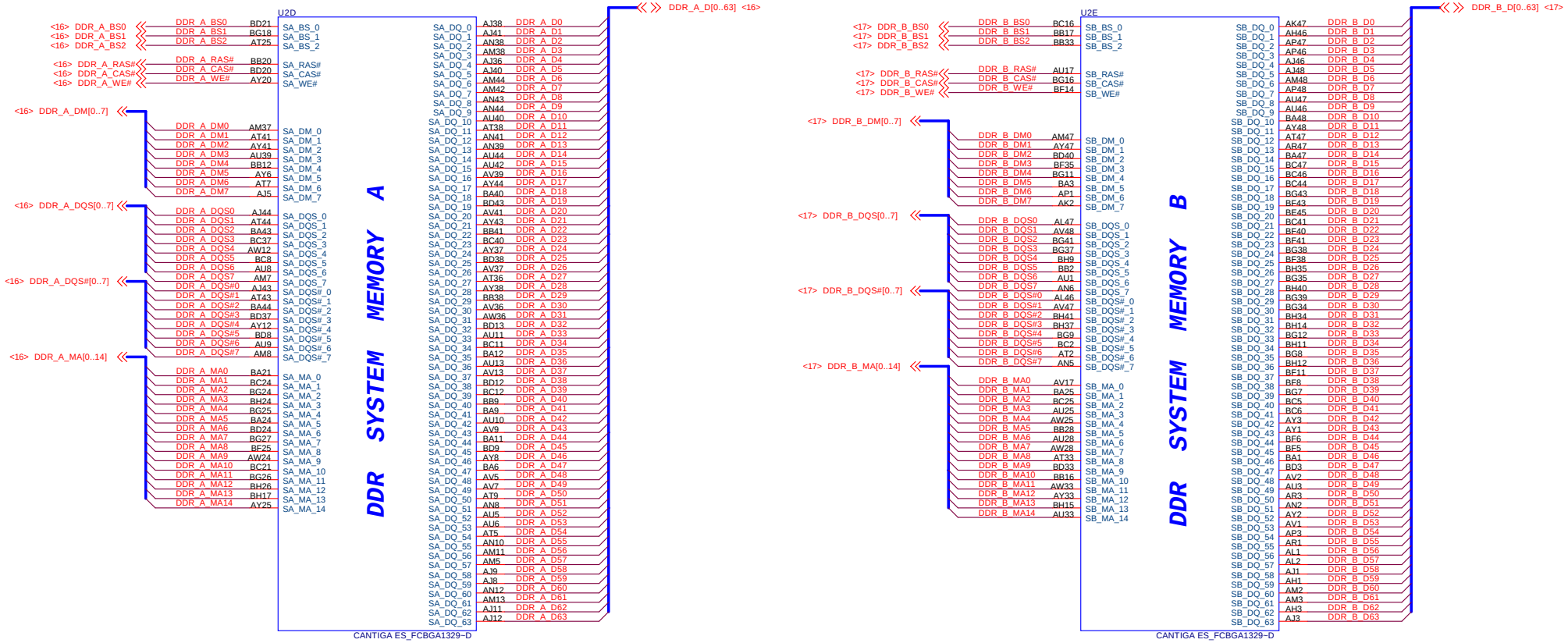

PROPRIETARY NOTE: THIS SHEET OF ENGINEERING DRAWING AND SPECIFICATIONS CONTAINS CONFIDENTIAL TRADE SECRET AND OTHER PROPRIETARY INFORMATION OF DELL INC. ("DELL") THIS DOCUMENT MAY NOT BE TRANSFERRED OR COPIED WITHOUT THE EXPRESS WRITTEN AUTHORIZATION OF DELL. IN ADDITION, NEITHER THIS SHEET NOR THE INFORMATION IT CONTAINS WAY BE USED BY OR DISCLOSED TO ANY THIRD PARTY WITHOUT DELL'S EXPRESS WRITTEN CONSENT.

DELL CONFIDENTIAL/PROPRIETARY

Compal Electronics, Inc.

Title: **Cantiga(2 of 6)**

Size: | Document Number: **LA-3803P** | Rev: 0.8

Date: Thursday, June 12, 2008 | Sheet 11 of 71

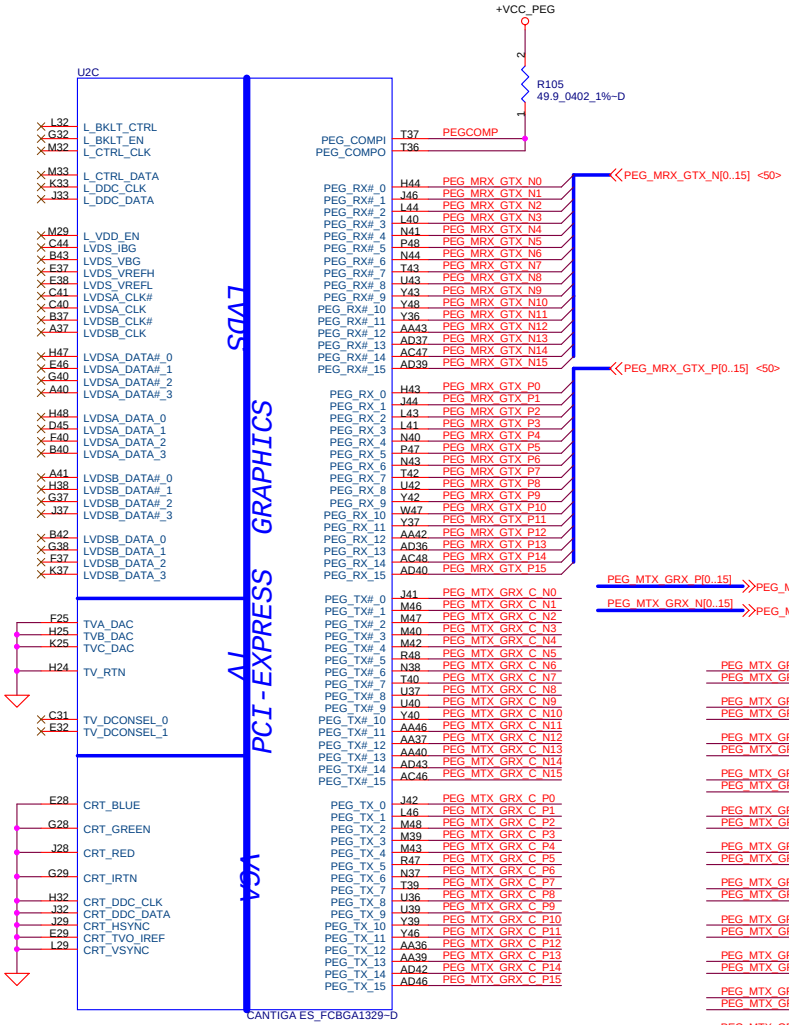

Strap Pin Table

CFG5	DMI X2 Select	Low = DMI x 2 High = DMI x 4 (Default)
CFG6	iTPM Host Interface	Low = iTPM enable High = iTPM disable(Defult)
CFG7	Management Engine Crypto Strap	Low = TLS cipher suite with no confidentiality High = TLS cipher suite with confidentiality(Default)
CFG9	PCI Express Graphic Lane	Low = Reverse Lane High = Normal Operation(Default)
CFG16	FSB Dynamic ODT	Low=Dynamic ODT Disable High=Dynamic ODT Enable(default)
CFG19	DMI Lane Reversal	Low=Normal (default) High=Lane Reversed
CFG20	Digital Display Port Concurrent Operation	Low=Only digital display port (SDVO/DP/iHDMI) or PCIe is operational (default) High = Digital display port (SDVO/DP/iHDMI) and PCIe are operating simultaneously via the PEG port
SDVO_CRTL_DATA		Low=No SDVO Device Present (default) High=SDVO Device Present
DDPC_CTRLDATA		Low=DisplayPort disabled (default) High=DisplayPort device present

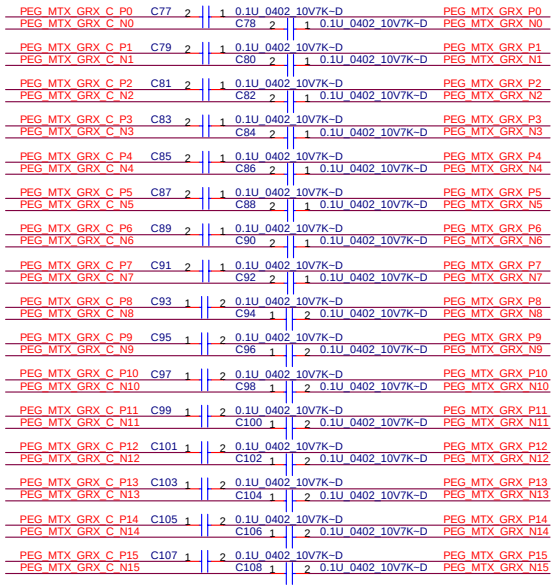

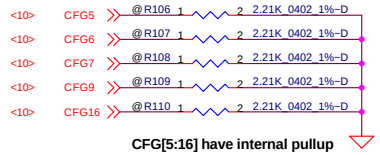

CFG[5:16] have internal pullup

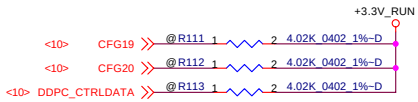

CFG[19:20] have internal pulldown

PROPRIETARY NOTE: THIS SHEET OF ENGINEERING DRAWING AND SPECIFICATIONS CONTAINS CONFIDENTIAL TRADE SECRET AND OTHER PROPRIETARY INFORMATION OF DELL INC. ("DELL") THIS DOCUMENT MAY NOT BE TRANSFERRED OR COPIED WITHOUT THE EXPRESS WRITTEN AUTHORIZATION OF DELL. IN ADDITION, NEITHER THIS SHEET NOR THE INFORMATION IT CONTAINS WAY BE USED BY OR DISCLOSED TO ANY THIRD PARTY WITHOUT DELL'S EXPRESS WRITTEN CONSENT.

DELL CONFIDENTIAL/PROPRIETARY

Compal Electronics, Inc.

Title: Cantiga(3 of 6)

Size | Document Number: LA-3803P | Rev: 0.8

Date: Thursday, June 12, 2008 | Sheet 12 of 71

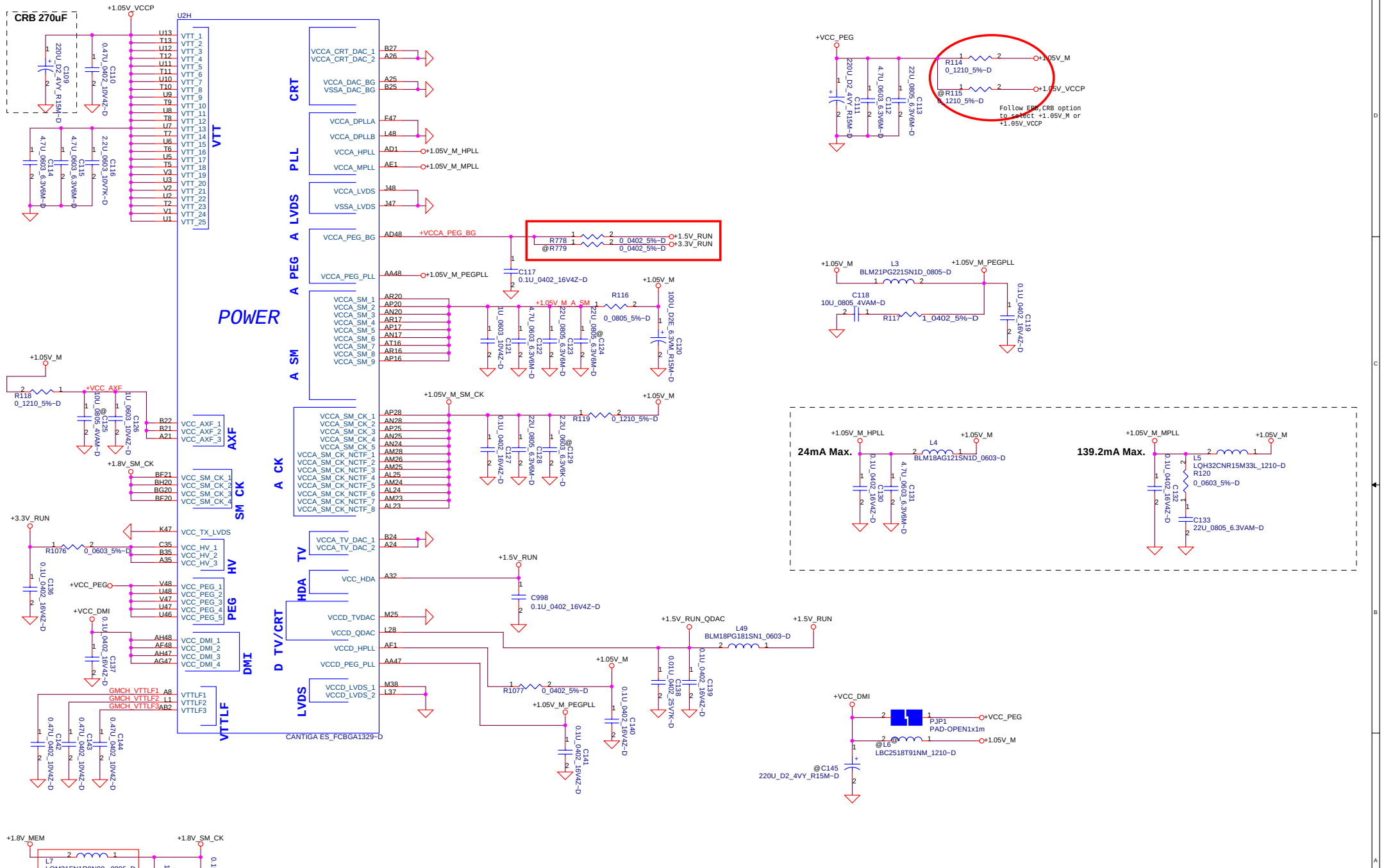

DELL CONFIDENTIAL/PROPRIETARY

PROPRIETARY NOTE: THIS SHEET OF ENGINEERING DRAWING AND SPECIFICATIONS CONTAINS CONFIDENTIAL TRADE SECRET AND OTHER PROPRIETARY INFORMATION OF DELL INC. ("DELL") THIS DOCUMENT MAY NOT BE TRANSFERRED OR COPIED WITHOUT THE EXPRESS WRITTEN AUTHORIZATION OF DELL. IN ADDITION, NEITHER THIS SHEET NOR THE INFORMATION IT CONTAINS WAY BE USED BY OR DISCLOSED TO ANY THIRD PARTY WITHOUT DELL'S EXPRESS WRITTEN CONSENT.

Compal Electronics, Inc.	
Title	Cantiga(4 of 6)
Size	
Document Number	LA-3803P
Rev	0.8
Date: Thursday, June 12, 2008	Sheet 13 of 71

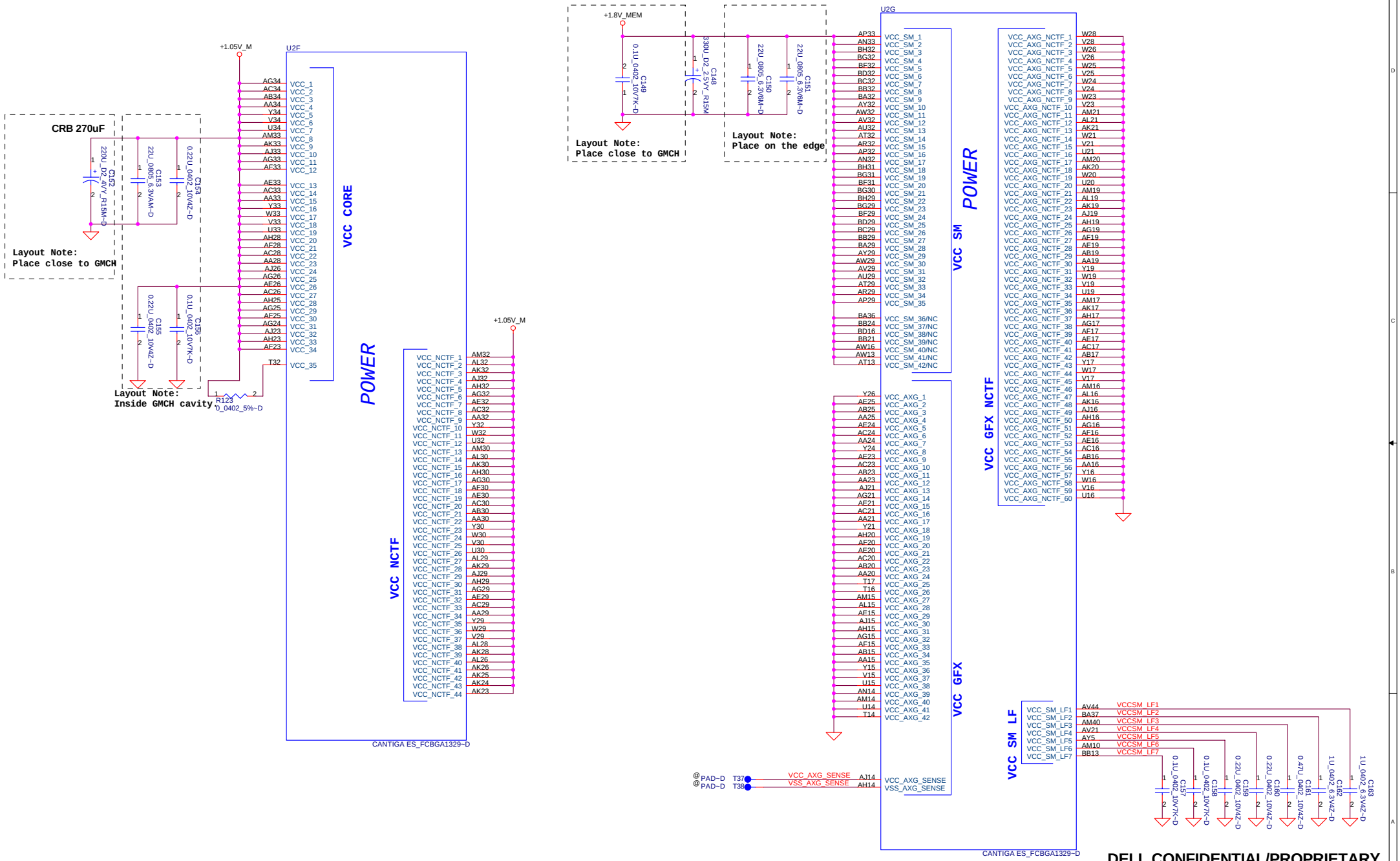

PROPRIETARY NOTE: THIS SHEET OF ENGINEERING DRAWING AND SPECIFICATIONS CONTAINS CONFIDENTIAL TRADE SECRET AND OTHER PROPRIETARY INFORMATION OF DELL INC. ("DELL") THIS DOCUMENT MAY NOT BE TRANSFERRED OR COPIED WITHOUT THE EXPRESS WRITTEN AUTHORIZATION OF DELL. IN ADDITION, NEITHER THIS SHEET NOR THE INFORMATION IT CONTAINS WAY BE USED BY OR DISCLOSED TO ANY THIRD PARTY WITHOUT DELL'S EXPRESS WRITTEN CONSENT.

DELL CONFIDENTIAL/PROPRIETARY

Compal Electronics, Inc.

Title: Cantiga(5 of 6)

Size | Document Number: LA-3803P | Rev: 0.8

Date: Thursday, June 12, 2008 | Sheet 14 of 71

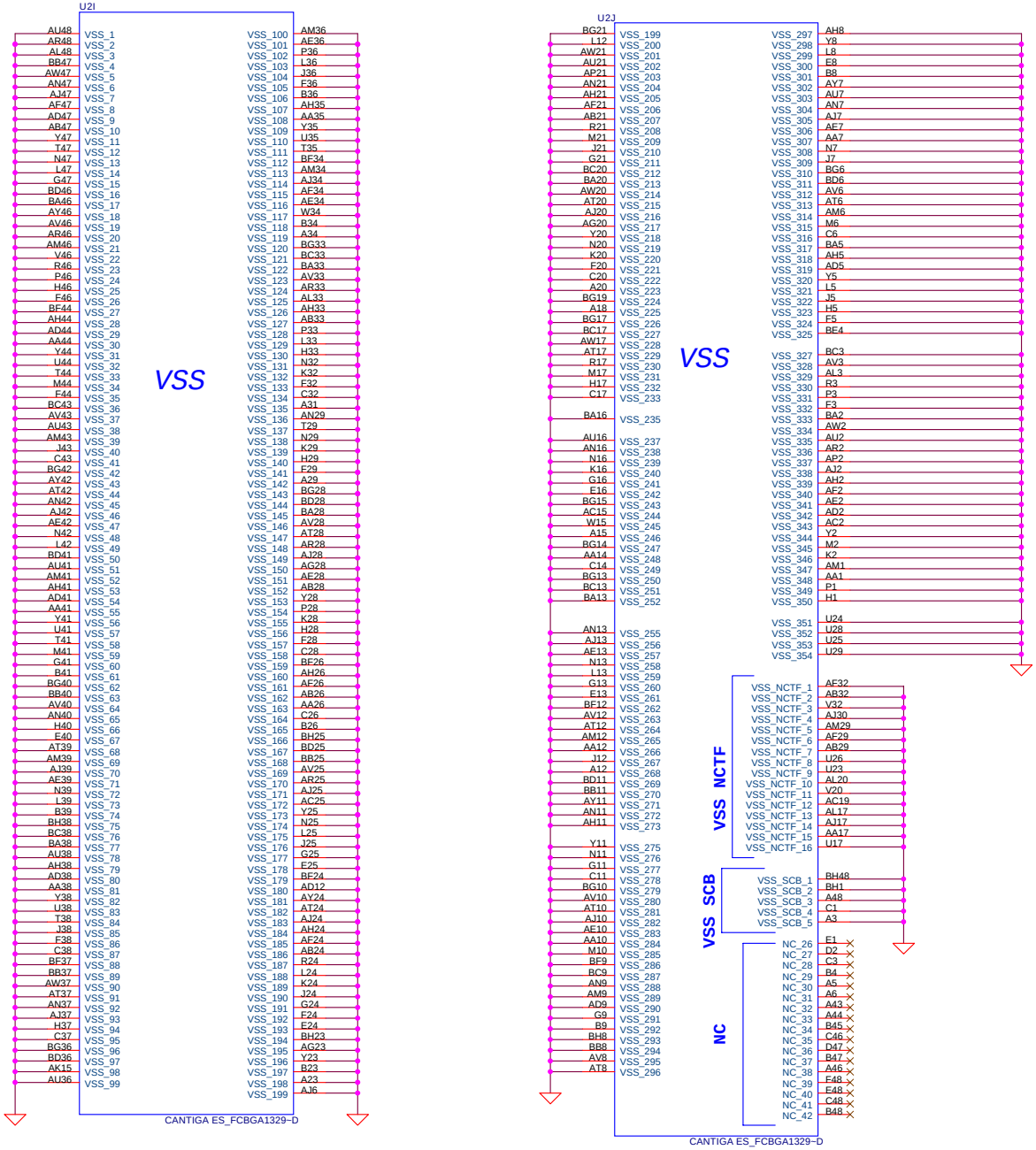

PROPRIETARY NOTE: THIS SHEET OF ENGINEERING DRAWING AND SPECIFICATIONS CONTAINS CONFIDENTIAL TRADE SECRET AND OTHER PROPRIETARY INFORMATION OF DELL INC. ("DELL") THIS DOCUMENT MAY NOT BE TRANSFERRED OR COPIED WITHOUT THE EXPRESS WRITTEN AUTHORIZATION OF DELL. IN ADDITION, NEITHER THIS SHEET NOR THE INFORMATION IT CONTAINS WAY BE USED BY OR DISCLOSED TO ANY THIRD PARTY WITHOUT DELL'S EXPRESS WRITTEN CONSENT.

DELL CONFIDENTIAL/PROPRIETARY

Compal Electronics, Inc.

Title: **Cantiga(6 of 6)**

Size | Document Number: **LA-3803P** | Rev: 0.8

Date: Thursday, June 12, 2008 | Sheet 15 of 71

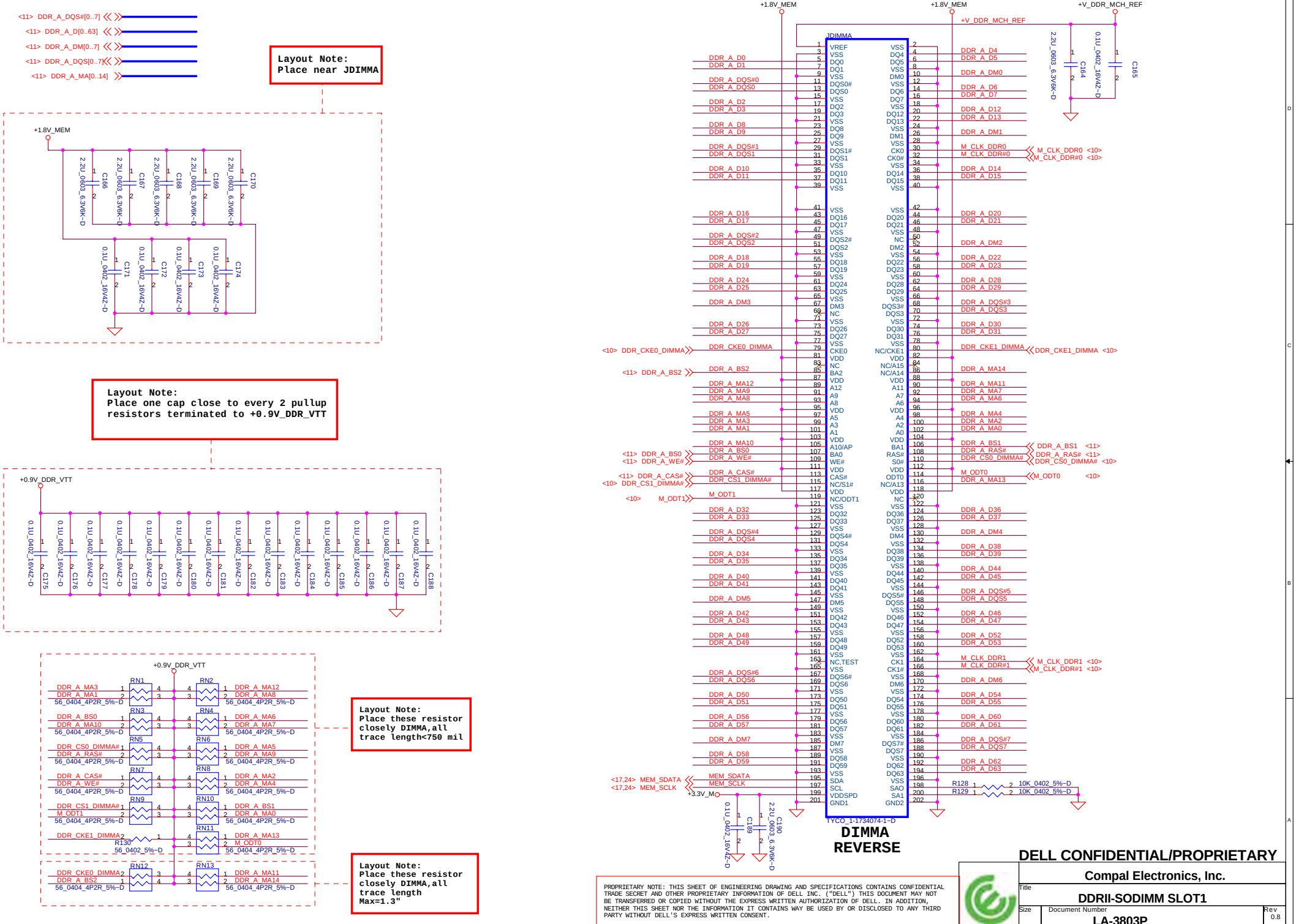
Layout Note:
Place near JDIMMA
Layout Note:
Place one cap close to every 2 pullup resistors terminated to +0.9V_DDR_VTT
Layout Note:
Place these resistor closely DIMMA,all trace length<750 mil
Layout Note:
Place these resistor closely DIMMA,all trace length Max=1.3"
JDIMMA
DIMMA REVERSE
TYCO_1-1734074-1-D
DELL CONFIDENTIAL/PROPRIETARY
Compal Electronics, Inc.
DDRII-SODIMM SLOT1
LA-3803P
Rev 0.8
Thursday, June 12, 2008
Sheet 16 of 71

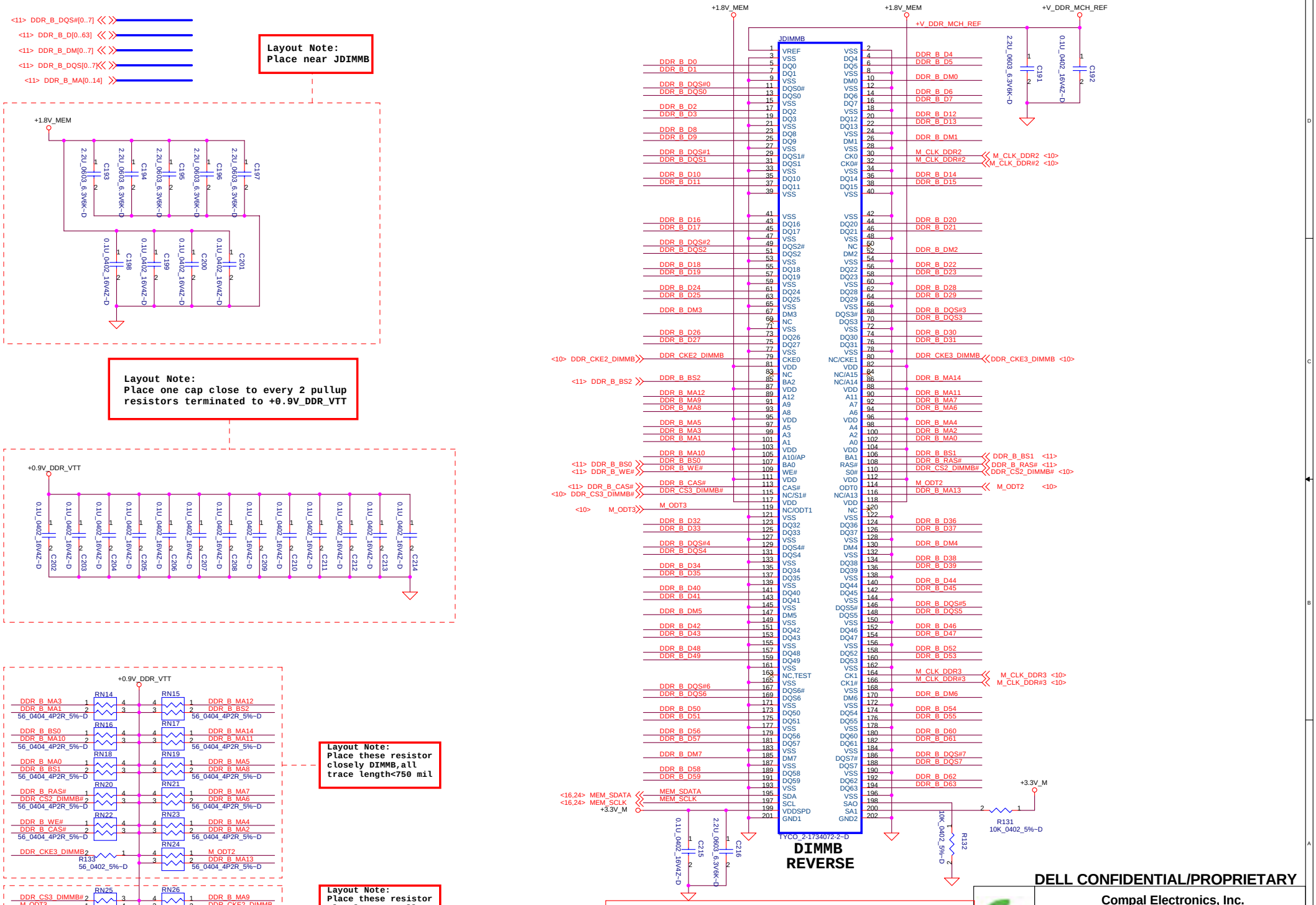
Layout Note:
Place near JDIMMB
Layout Note:
Place one cap close to every 2 pullup resistors terminated to +0.9V_DDR_VTT
Layout Note:
Place these resistor closely DIMMB,all trace length<750 mil
Layout Note:
Place these resistor closely DIMMB,all trace length Max=1.3"
JDIMMB
DIMMB REVERSE
TYCO_2-1734072-2-D
+1.8V_MEM
+V_DDR_MCH_REF
+0.9V_DDR_VTT
+3.3V_M
DELL CONFIDENTIAL/PROPRIETARY
Compal Electronics, Inc.
Title
DDRII-SODIMM SLOT2
Size
Document Number
LA-3803P
Rev
0.8
Date: Thursday, June 12, 2008
Sheet 17 of 71

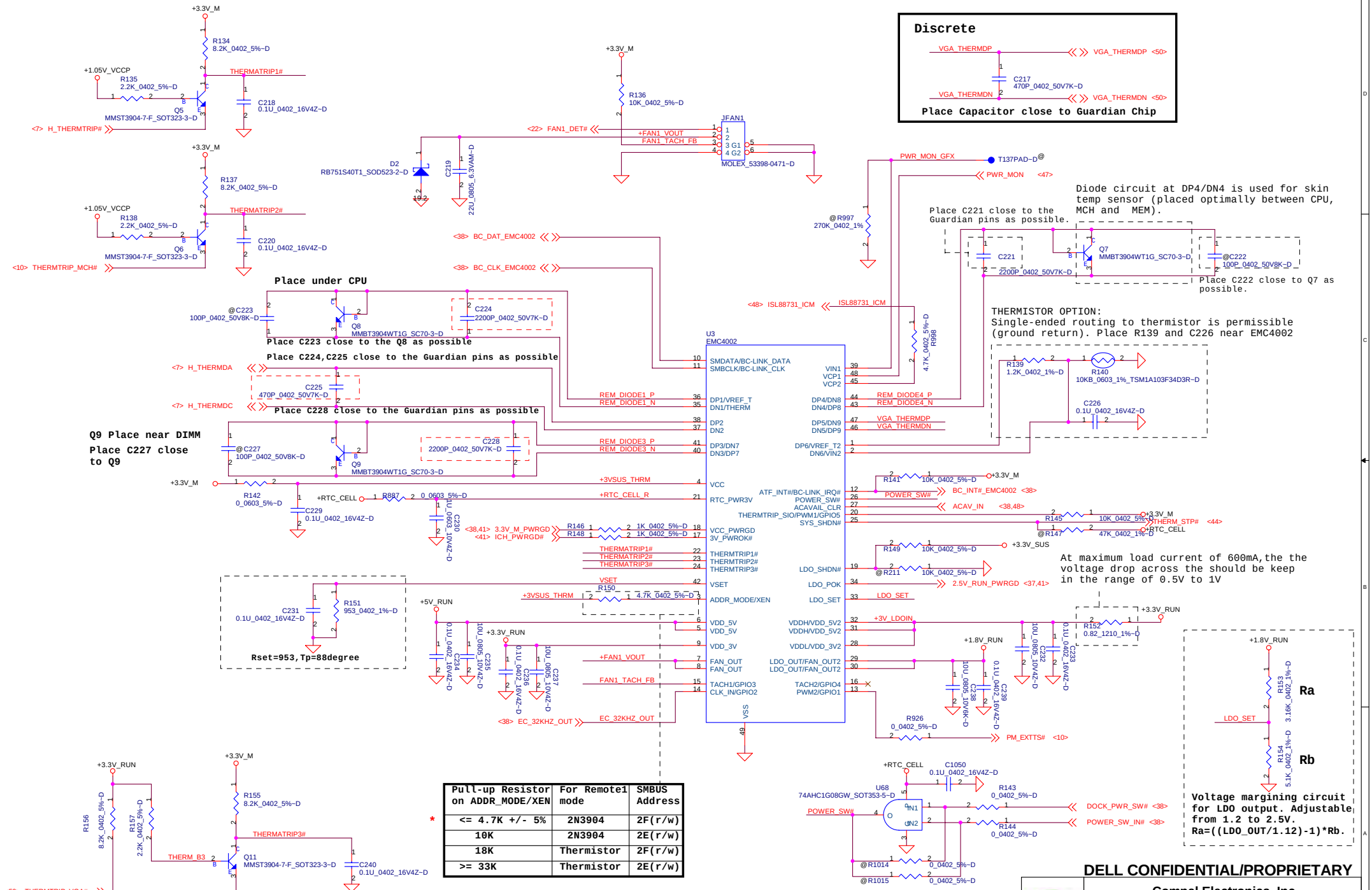

Pull-up Resistor on ADDR_MODE/XEN	For Remote1 mode	SMBUS Address
<= 4.7K +/- 5%	2N3904	2F(r/w)
10K	2N3904	2E(r/w)
18K	Thermistor	2F(r/w)
>= 33K	Thermistor	2E(r/w)

PROPRIETARY NOTE: THIS SHEET OF ENGINEERING DRAWING AND SPECIFICATIONS CONTAINS CONFIDENTIAL TRADE SECRET AND OTHER PROPRIETARY INFORMATION OF DELL INC. ("DELL") THIS DOCUMENT MAY NOT BE TRANSFERRED OR COPIED WITHOUT THE EXPRESS WRITTEN AUTHORIZATION OF DELL. IN ADDITION, NEITHER THIS SHEET NOR THE INFORMATION IT CONTAINS WAY BE USED BY OR DISCLOSED TO ANY THIRD PARTY WITHOUT DELL'S EXPRESS WRITTEN CONSENT.

DELL CONFIDENTIAL/PROPRIETARY

Compal Electronics, Inc.

Title: FAN & Thermal Sensor

Size: | Document Number: LA-3803P | Rev: 0.8

Date: Thursday, June 12, 2008 | Sheet 18 of 71

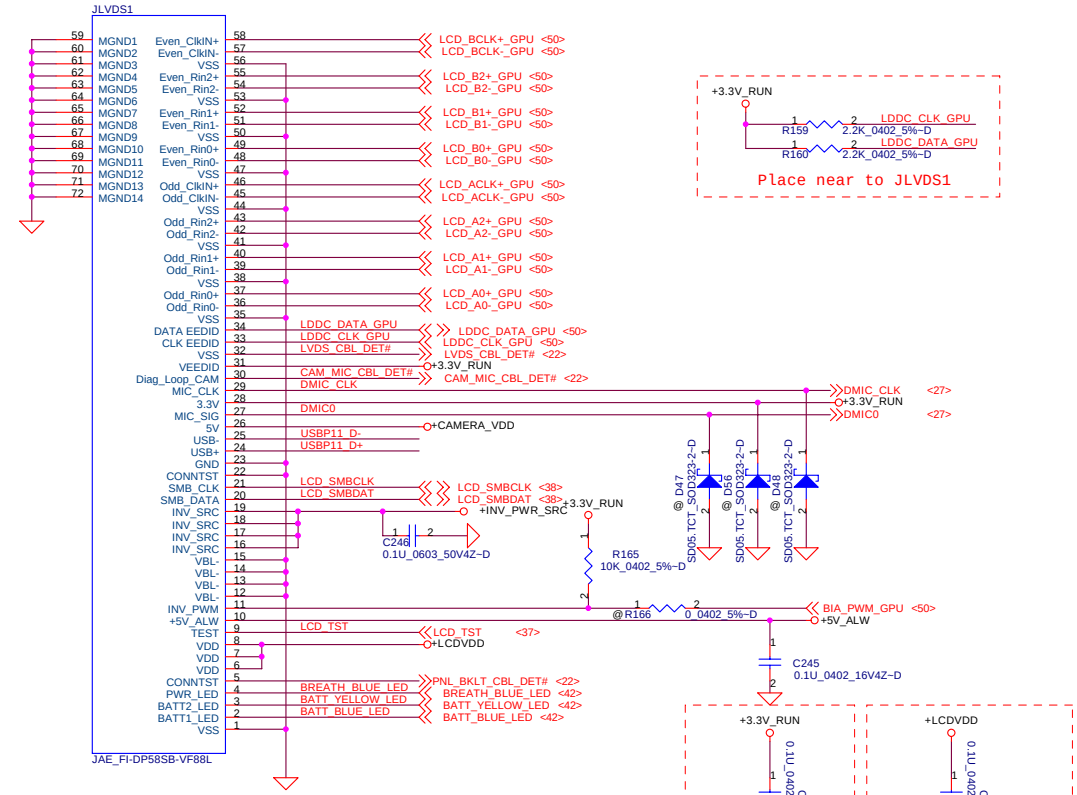

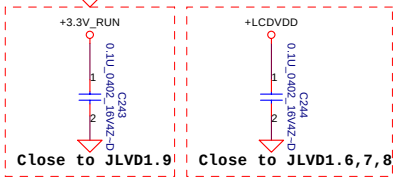

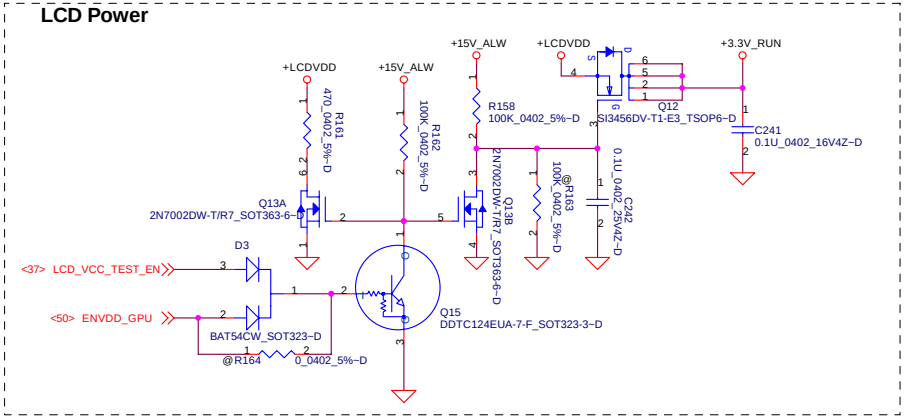

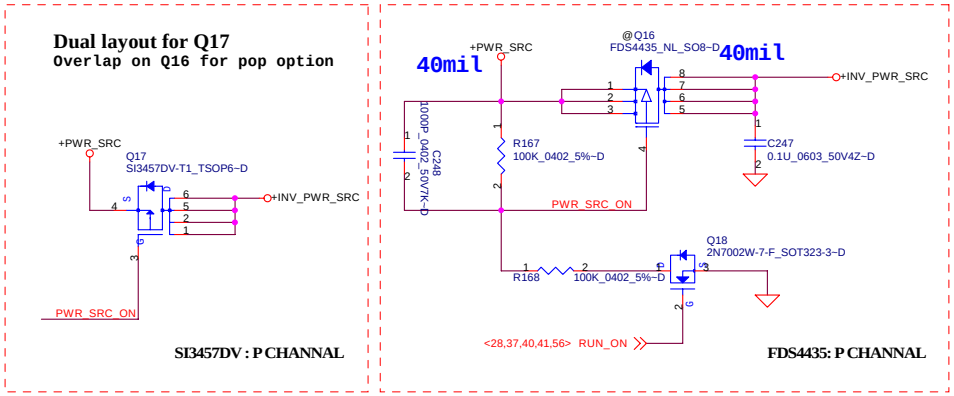

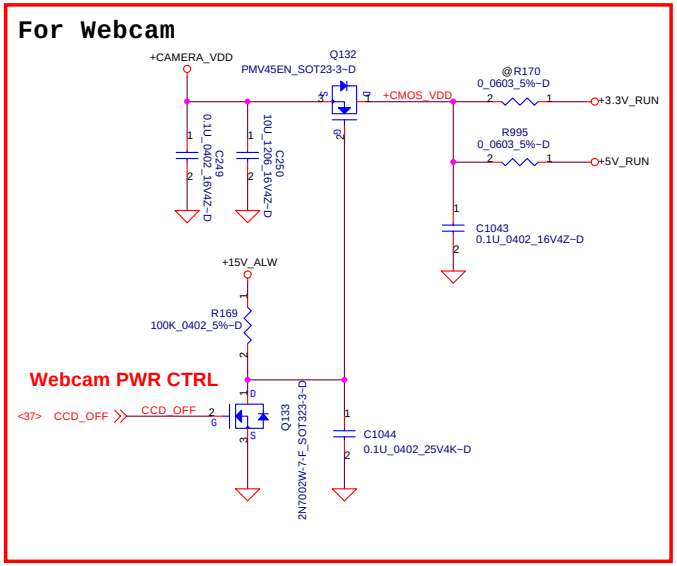

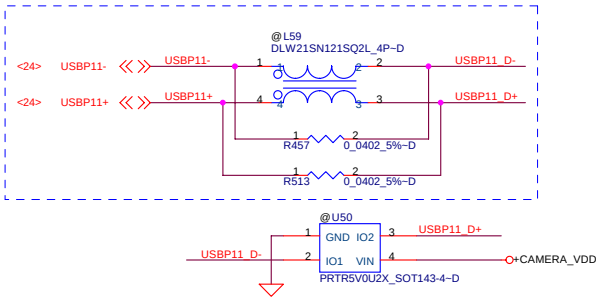

PROPRIETARY NOTE: THIS SHEET OF ENGINEERING DRAWING AND SPECIFICATIONS CONTAINS CONFIDENTIAL TRADE SECRET AND OTHER PROPRIETARY INFORMATION OF DELL INC. ("DELL") THIS DOCUMENT MAY NOT BE TRANSFERRED OR COPIED WITHOUT THE EXPRESS WRITTEN AUTHORIZATION OF DELL. IN ADDITION, NEITHER THIS SHEET NOR THE INFORMATION IT CONTAINS WAY BE USED BY OR DISCLOSED TO ANY THIRD PARTY WITHOUT DELL'S EXPRESS WRITTEN CONSENT.

DELL CONFIDENTIAL/PROPRIETARY

Compal Electronics, Inc.

Title: LVDS Conn

Size | Document Number: LA-3803P | Rev: 0.8

Date: Thursday, June 12, 2008 | Sheet 19 of 71

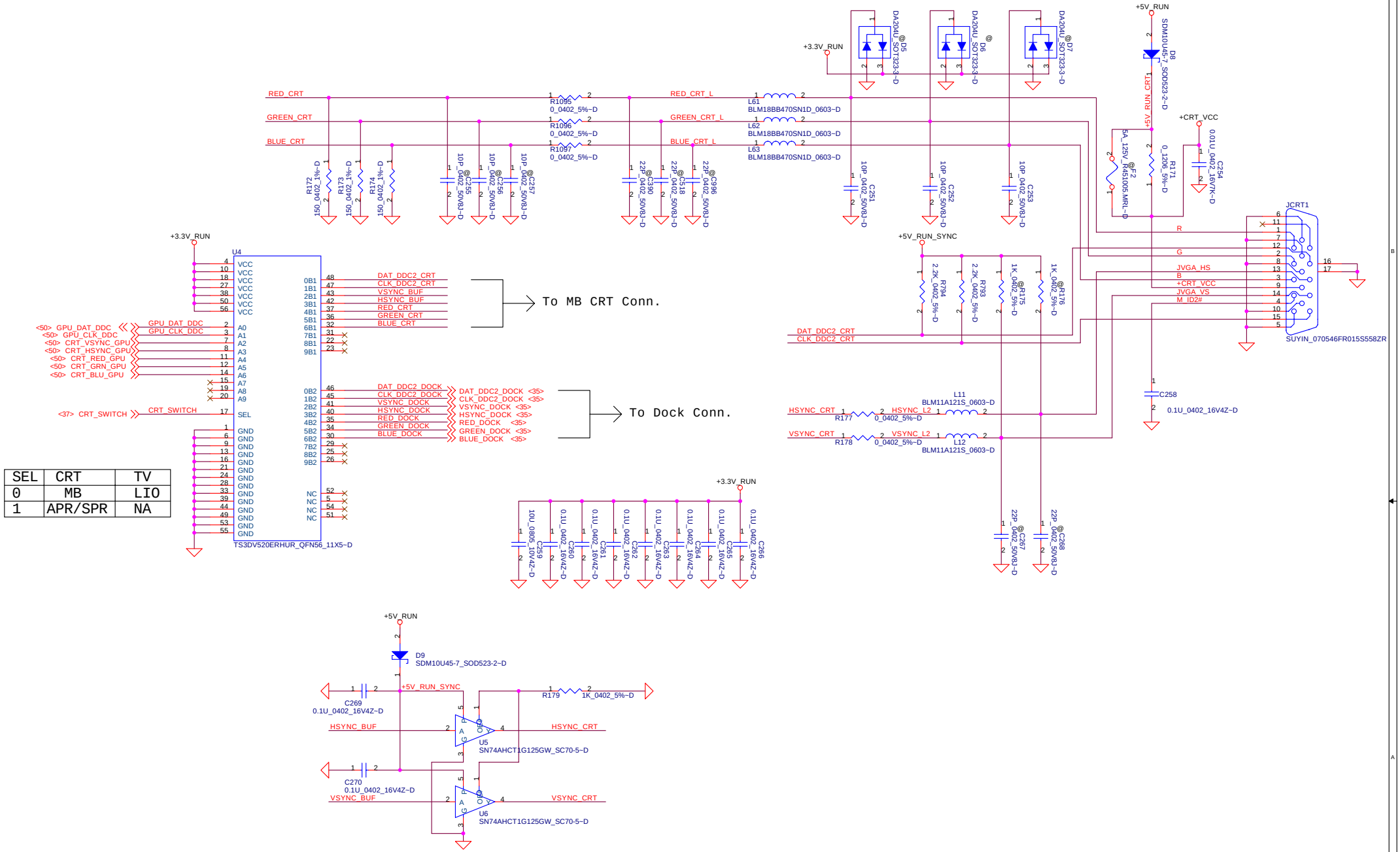

SEL	CRT	TV
0	MB	LIO
1	APR/SPR	NA

DELL CONFIDENTIAL/PROPRIETARY

PROPRIETARY NOTE: THIS SHEET OF ENGINEERING DRAWING AND SPECIFICATIONS CONTAINS CONFIDENTIAL TRADE SECRET AND OTHER PROPRIETARY INFORMATION OF DELL INC. ("DELL") THIS DOCUMENT MAY NOT BE TRANSFERRED OR COPIED WITHOUT THE EXPRESS WRITTEN AUTHORIZATION OF DELL. IN ADDITION, NEITHER THIS SHEET NOR THE INFORMATION IT CONTAINS WAY BE USED BY OR DISCLOSED TO ANY THIRD PARTY WITHOUT DELL'S EXPRESS WRITTEN CONSENT.

Compal Electronics, Inc.

Title: CRT/Video switch

Size: | Document Number: LA-3803P | Rev: 0.8

Date: Thursday, June 12, 2008 | Sheet 20 of 71

SW for MB side

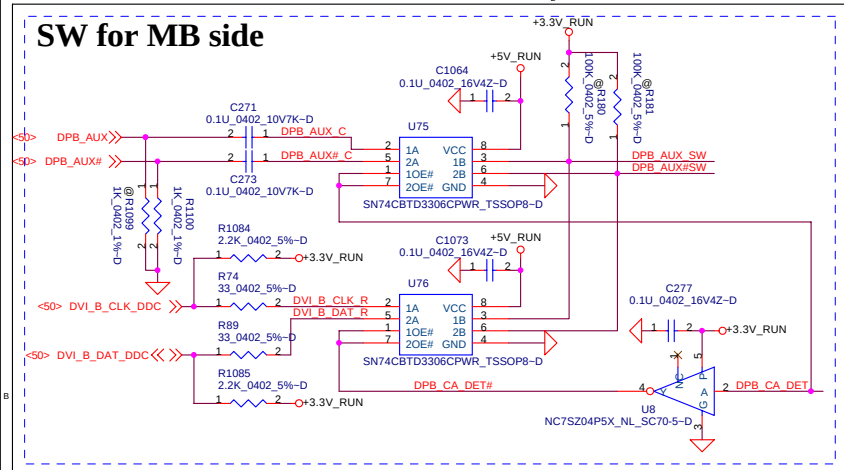

SW for eDOCK side

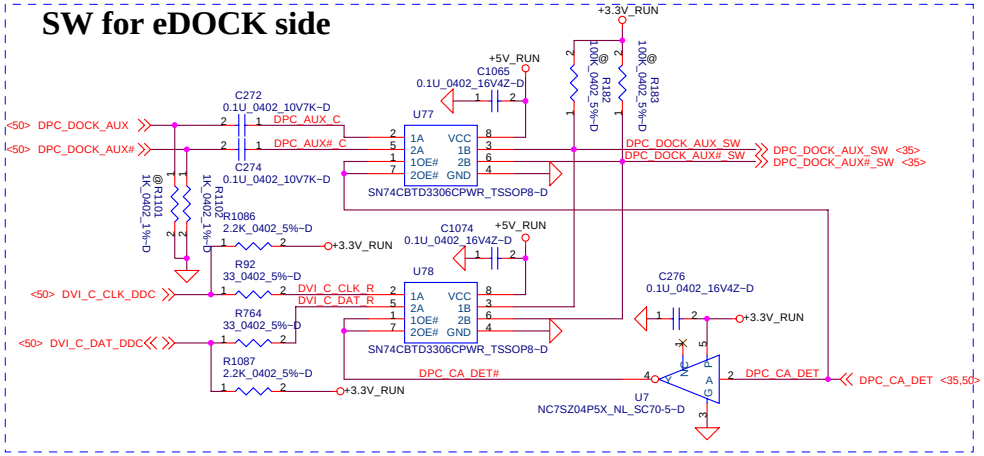

Display port Connector

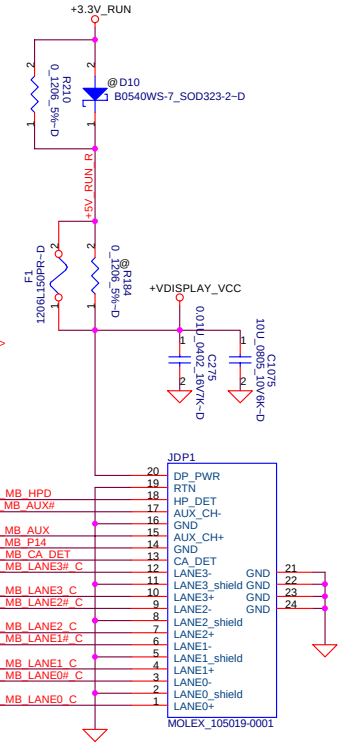

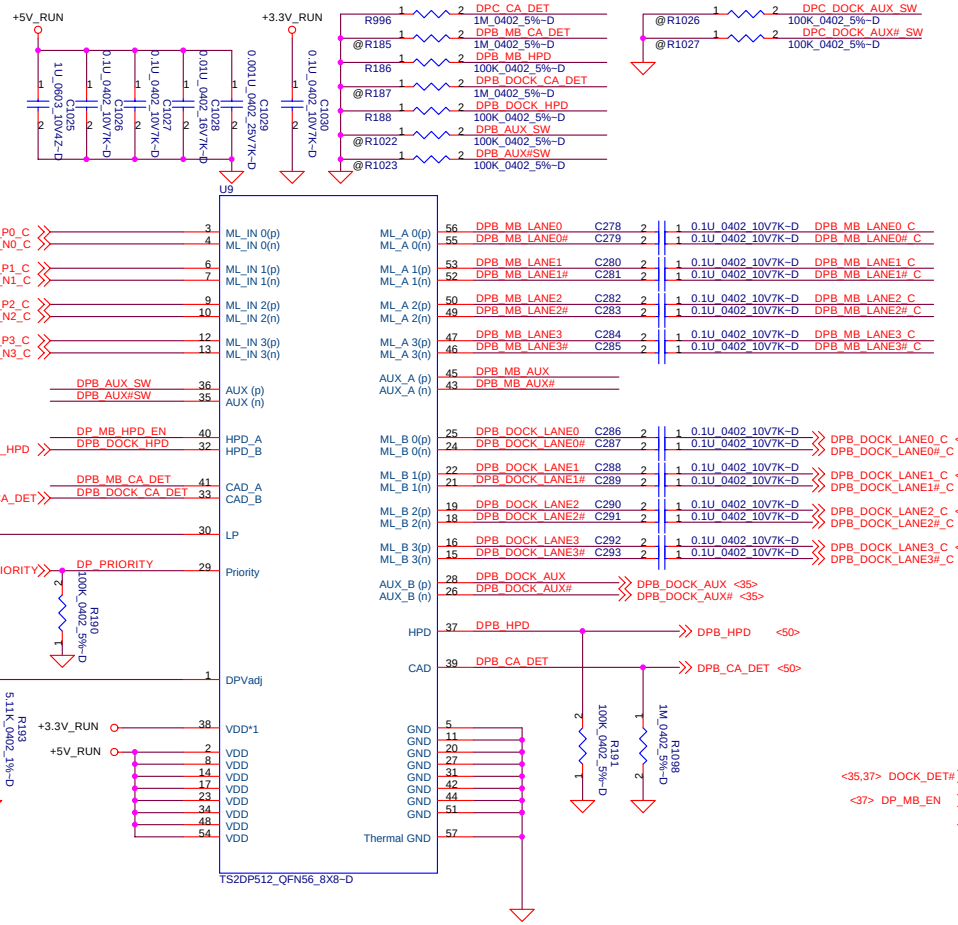

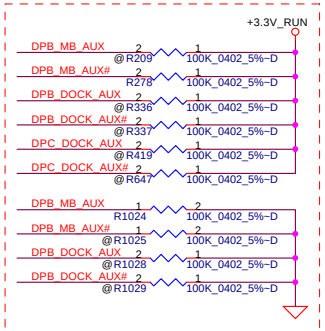

Pads for interoperability, remove in X01 if not needed.

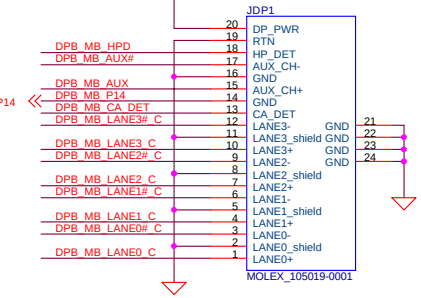

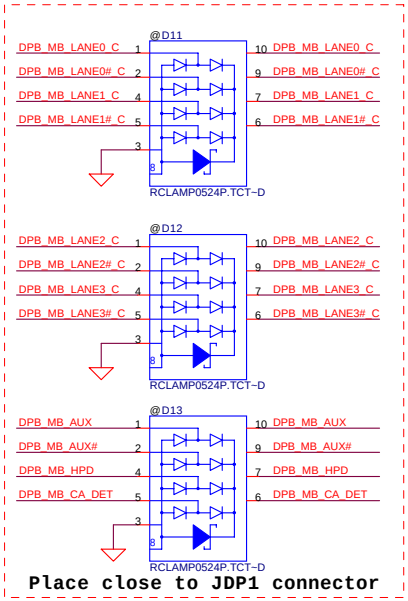

Place close to JDP1 connector

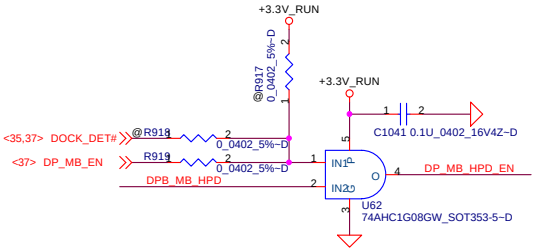

Pin30	Level	State	Description
LP	Hi	Normal Mode	Standard operational mode for device
	Low	Low power Mode	Device is forced into a low power mode causing the output s to go to a high-Z state, all other inputs are ignore

PROPRIETARY NOTE: THIS SHEET OF ENGINEERING DRAWING AND SPECIFICATIONS CONTAINS CONFIDENTIAL TRADE SECRET AND OTHER PROPRIETARY INFORMATION OF DELL INC. ("DELL") THIS DOCUMENT MAY NOT BE TRANSFERRED OR COPIED WITHOUT THE EXPRESS WRITTEN AUTHORIZATION OF DELL. IN ADDITION, NEITHER THIS SHEET NOR THE INFORMATION IT CONTAINS WAY BE USED BY OR DISCLOSED TO ANY THIRD PARTY WITHOUT DELL'S EXPRESS WRITTEN CONSENT.

DELL CONFIDENTIAL/PROPRIETARY

Compal Electronics, Inc.

Title: Display port

Size: | Document Number: LA-3803P | Rev: 0.8

Date: Thursday, June 12, 2008 | Sheet 21 of 71

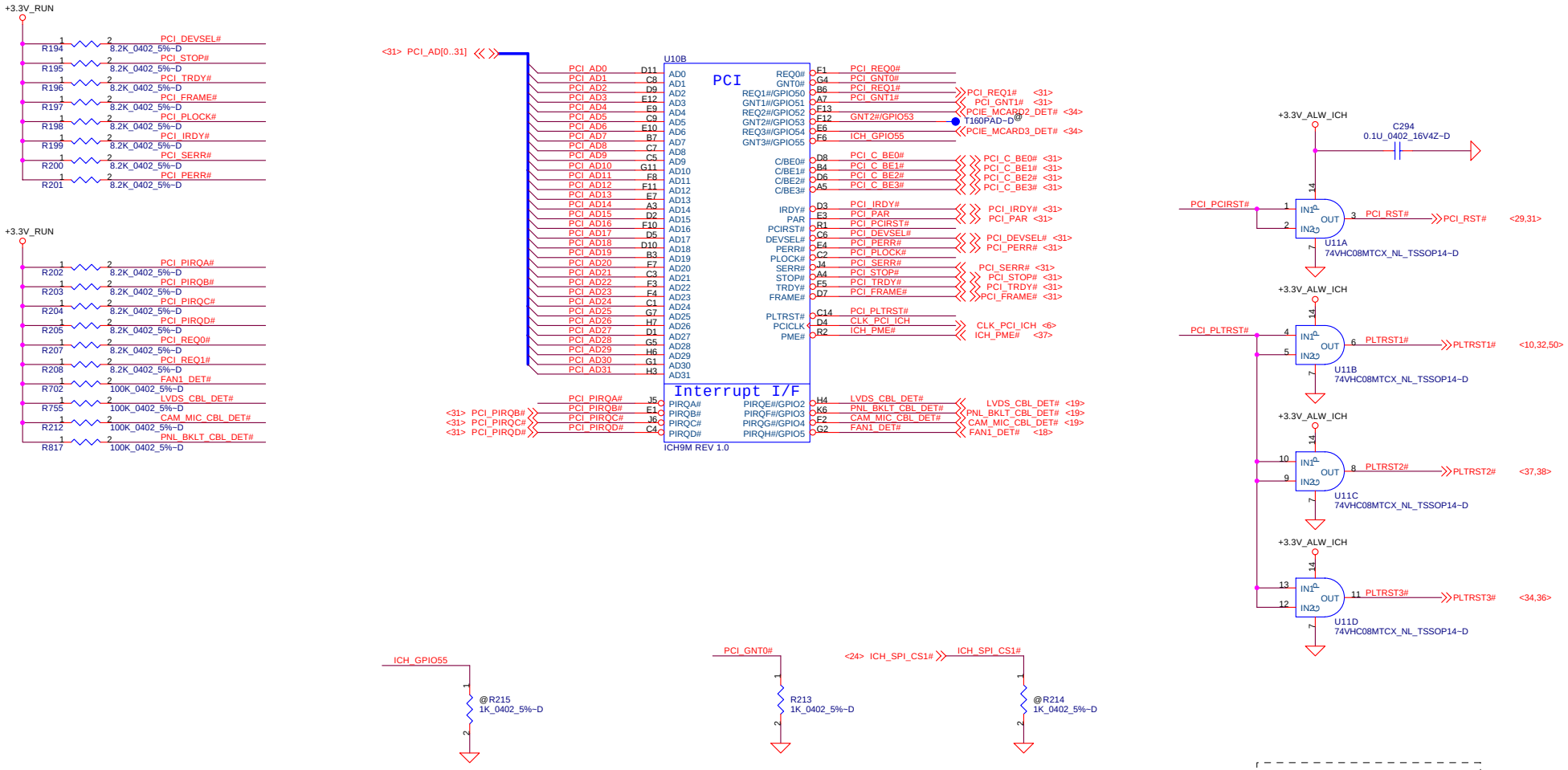

A16 away override strap.	
PCI_GNT3#/(MDC_RST_DIS#)	Low = A16 swap override enabled. High = Default.

*

Boot BIOS Strap		
PCI_GNT0#	SPI_CS1#	Boot BIOS Location
0	1	SPI
1	0	PCI
1	1	LPC

PROPRIETARY NOTE: THIS SHEET OF ENGINEERING DRAWING AND SPECIFICATIONS CONTAINS CONFIDENTIAL TRADE SECRET AND OTHER PROPRIETARY INFORMATION OF DELL INC. ("DELL") THIS DOCUMENT MAY NOT BE TRANSFERRED OR COPIED WITHOUT THE EXPRESS WRITTEN AUTHORIZATION OF DELL. IN ADDITION, NEITHER THIS SHEET NOR THE INFORMATION IT CONTAINS WAY BE USED BY OR DISCLOSED TO ANY THIRD PARTY WITHOUT DELL'S EXPRESS WRITTEN CONSENT.

DELL CONFIDENTIAL/PROPRIETARY

Compal Electronics, Inc.

Title: ICH9-M(1/4)

Size | Document Number: LA-3803P | Rev: 0.8

Date: Thursday, June 12, 2008 | Sheet 22 of 71

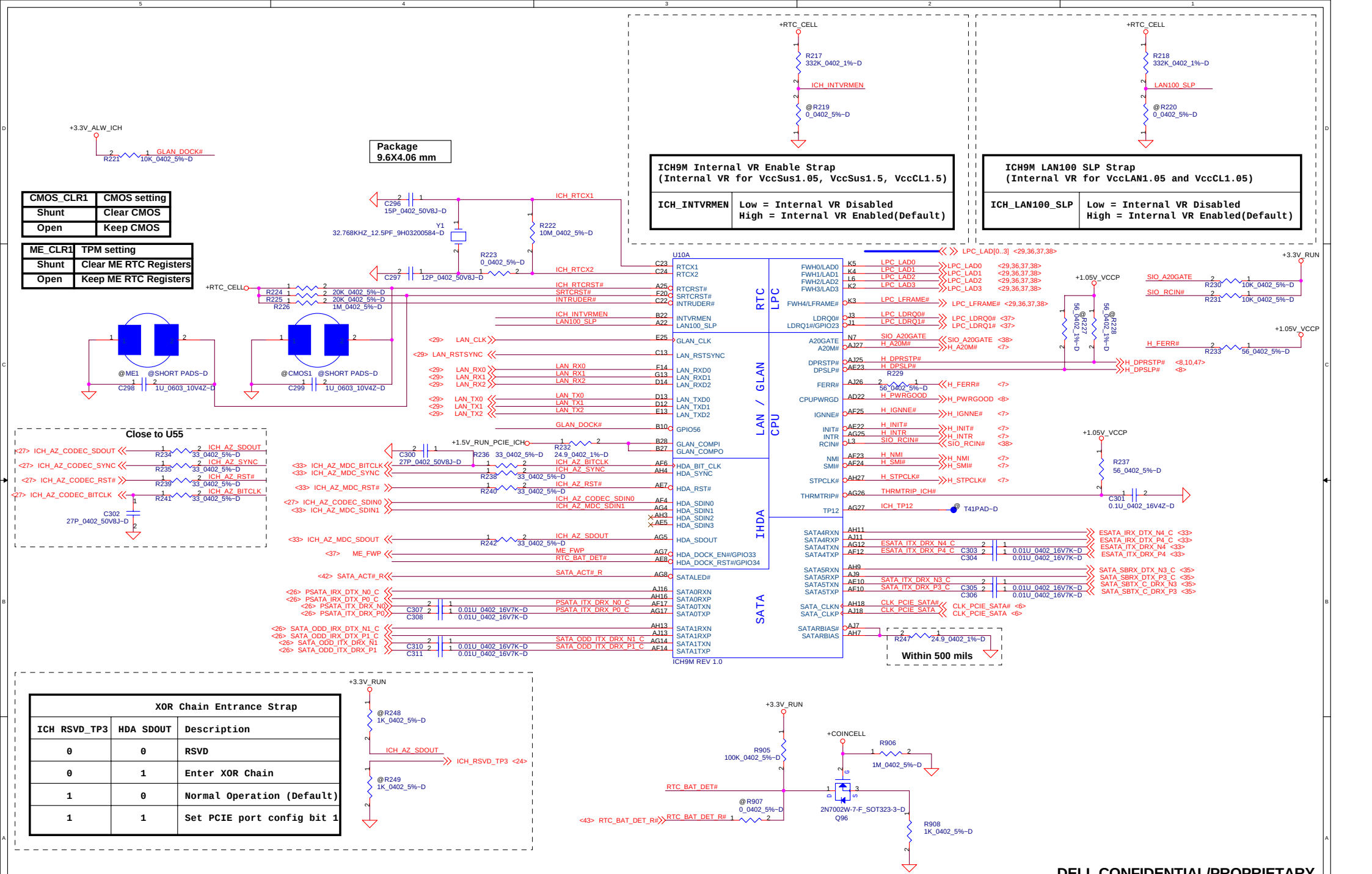

CMOS_CLR1	CMOS setting
Shunt	Clear CMOS
Open	Keep CMOS

ME_CLR1	TPM setting
Shunt	Clear ME RTC Registers
Open	Keep ME RTC Registers

ICH9M Internal VR Enable Strap (Internal VR for VccSus1.05, VccSus1.5, VccCL1.5)	
ICH_INTVRMEN	Low = Internal VR Disabled High = Internal VR Enabled(Default)

ICH9M LAN100 SLP Strap (Internal VR for VccLAN1.05 and VccCL1.05)	
ICH_LAN100_SLP	Low = Internal VR Disabled High = Internal VR Enabled(Default)

XOR Chain Entrance Strap		
ICH RSVD_TP3	HDA SDOUT	Description
0	0	RSVD
0	1	Enter XOR Chain
1	0	Normal Operation (Default)
1	1	Set PCIE port config bit 1

PROPRIETARY NOTE: THIS SHEET OF ENGINEERING DRAWING AND SPECIFICATIONS CONTAINS CONFIDENTIAL TRADE SECRET AND OTHER PROPRIETARY INFORMATION OF DELL INC. ("DELL") THIS DOCUMENT MAY NOT BE TRANSFERRED OR COPIED WITHOUT THE EXPRESS WRITTEN AUTHORIZATION OF DELL. IN ADDITION, NEITHER THIS SHEET NOR THE INFORMATION IT CONTAINS WAY BE USED BY OR DISCLOSED TO ANY THIRD PARTY WITHOUT DELL'S EXPRESS WRITTEN CONSENT.

DELL CONFIDENTIAL/PROPRIETARY

Compal Electronics, Inc.

Title: ICH9-M(2/4)

Size: | Document Number: LA-3803P | Rev: 0.8

Date: Thursday, June 12, 2008 | Sheet 23 of 71

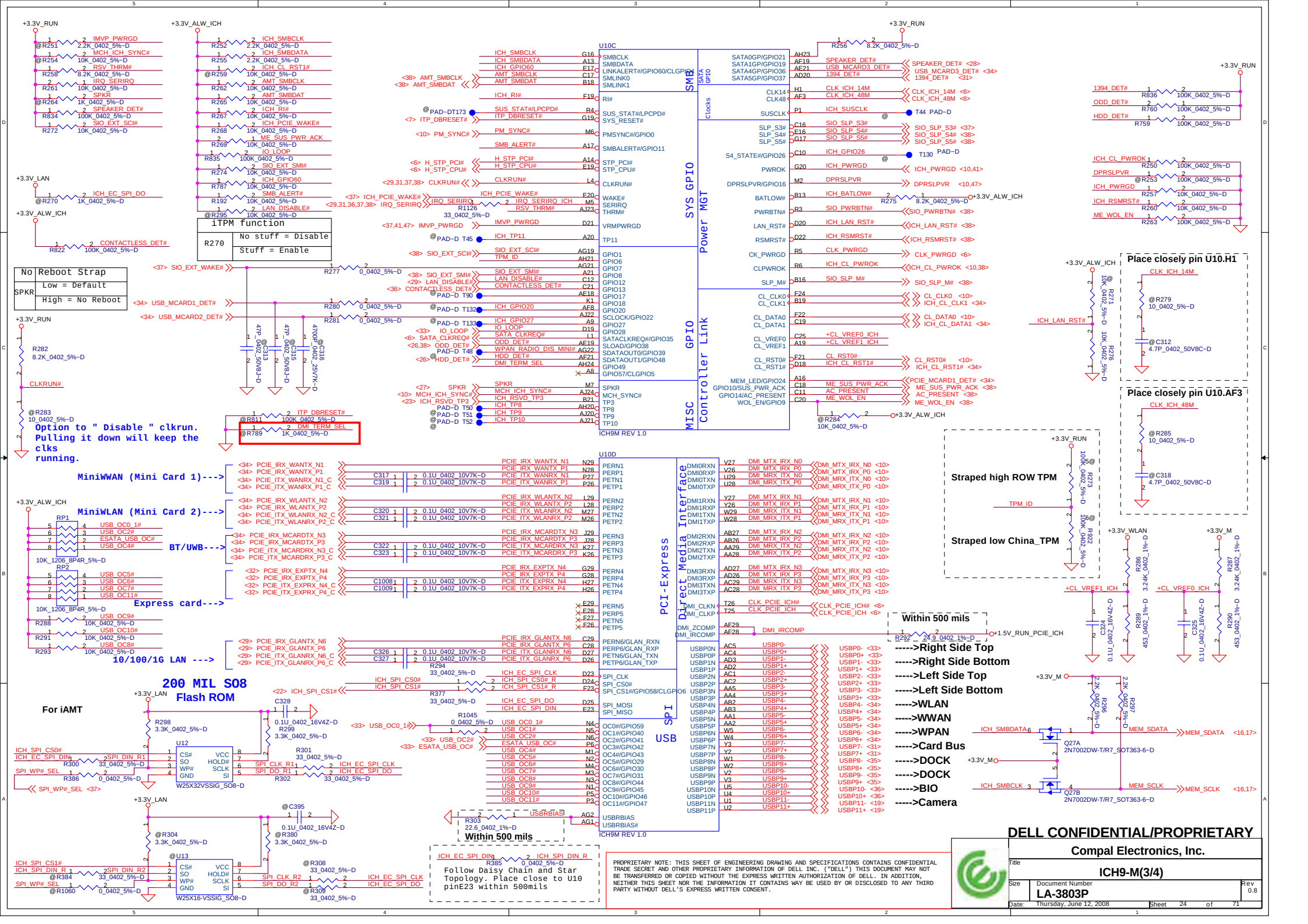
U10C
SYS GPIO
Power MGT
GPIO
Controller Link
MISC
ICH9M REV 1.0
U10D
PCI-Express
Direct Media Interface
SPI
USB
ICH9M REV 1.0
iTPM function
R270
No stuff = Disable
Stuff = Enable
No Reboot Strap
SPKR
Low = Default
High = No Reboot
Option to " Disable " clkrun. Pulling it down will keep the clks running.
MiniWWAN (Mini Card 1)--->
MiniWLAN (Mini Card 2)--->
BT/UWB--->
Express card--->
10/100/1G LAN --->
200 MIL SO8
Flash ROM
For iAMT
Place closely pin U10.H1
Place closely pin U10.AF3
Straped high ROW TPM
Straped low China_TPM
Within 500 mils
----->Right Side Top
----->Right Side Bottom
----->Left Side Top
----->Left Side Bottom
----->WLAN
----->WWAN
----->WPAN
----->Card Bus
----->DOCK
----->DOCK
----->BIO
----->Camera
Follow Daisy Chain and Star Topology. Place close to U10 pinE23 within 500mils
DELL CONFIDENTIAL/PROPRIETARY
Compal Electronics, Inc.
ICH9-M(3/4)
LA-3803P
Rev 0.8
Thursday, June 12, 2008
Sheet 24 of 71

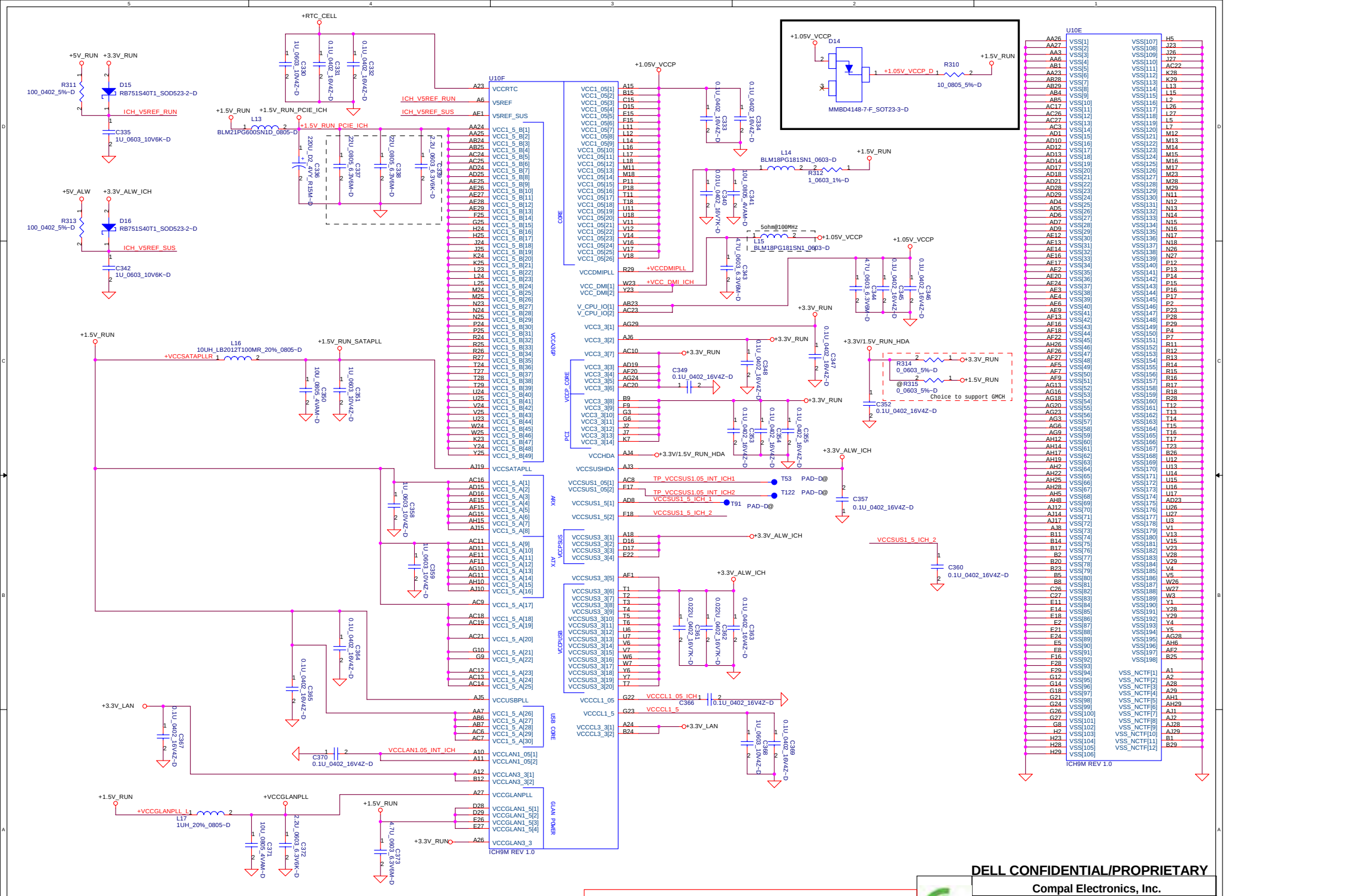

DELL CONFIDENTIAL/PROPRIETARY

PROPRIETARY NOTE: THIS SHEET OF ENGINEERING DRAWING AND SPECIFICATIONS CONTAINS CONFIDENTIAL TRADE SECRET AND OTHER PROPRIETARY INFORMATION OF DELL INC. ("DELL") THIS DOCUMENT MAY NOT BE TRANSFERRED OR COPIED WITHOUT THE EXPRESS WRITTEN AUTHORIZATION OF DELL. IN ADDITION, NEITHER THIS SHEET NOR THE INFORMATION IT CONTAINS WAY BE USED BY OR DISCLOSED TO ANY THIRD PARTY WITHOUT DELL'S EXPRESS WRITTEN CONSENT.

Compal Electronics, Inc.

Title: ICH8(4/4)

Size: | Document Number: LA-3803P | Rev: 0.8

Date: Thursday, June 12, 2008 | Sheet 25 of 71

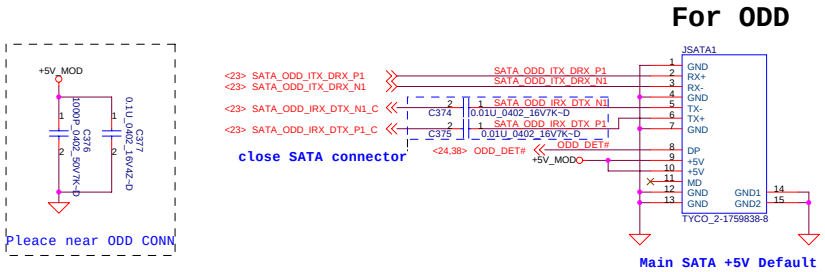

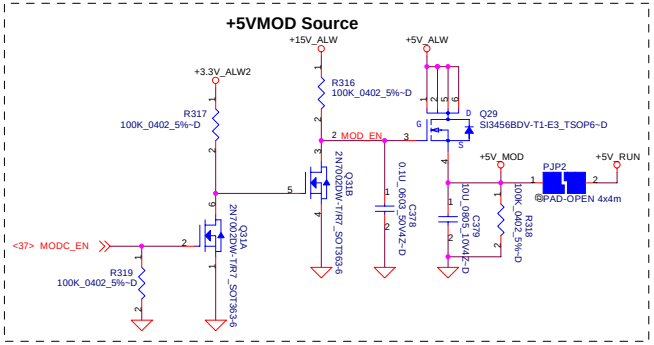

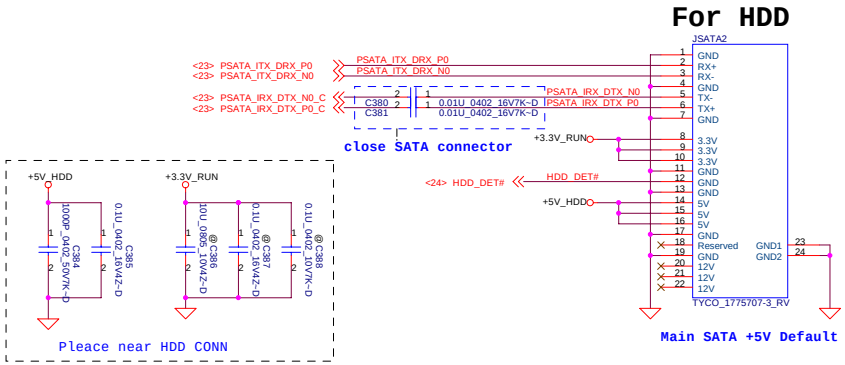

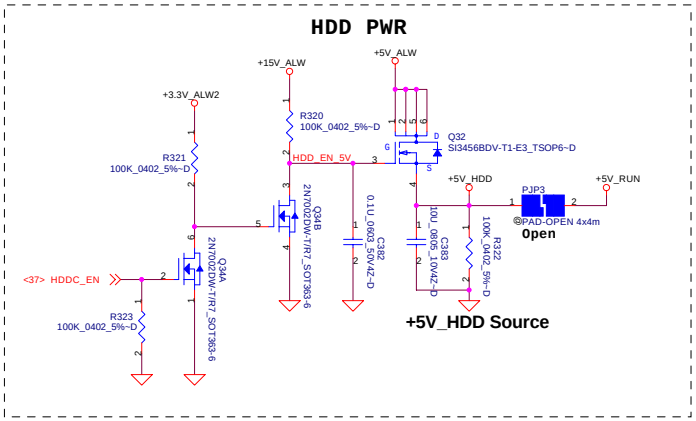

PROPRIETARY NOTE: THIS SHEET OF ENGINEERING DRAWING AND SPECIFICATIONS CONTAINS CONFIDENTIAL TRADE SECRET AND OTHER PROPRIETARY INFORMATION OF DELL INC. ("DELL") THIS DOCUMENT MAY NOT BE TRANSFERRED OR COPIED WITHOUT THE EXPRESS WRITTEN AUTHORIZATION OF DELL. IN ADDITION, NEITHER THIS SHEET NOR THE INFORMATION IT CONTAINS WAY BE USED BY OR DISCLOSED TO ANY THIRD PARTY WITHOUT DELL'S EXPRESS WRITTEN CONSENT.

DELL CONFIDENTIAL/PROPRIETARY

Compal Electronics, Inc.

Title: ODD/HDD CONNECTOR

Size | Document Number: LA-3803P | Rev: 0.8

Date: Thursday, June 12, 2008 | Sheet 26 of 71

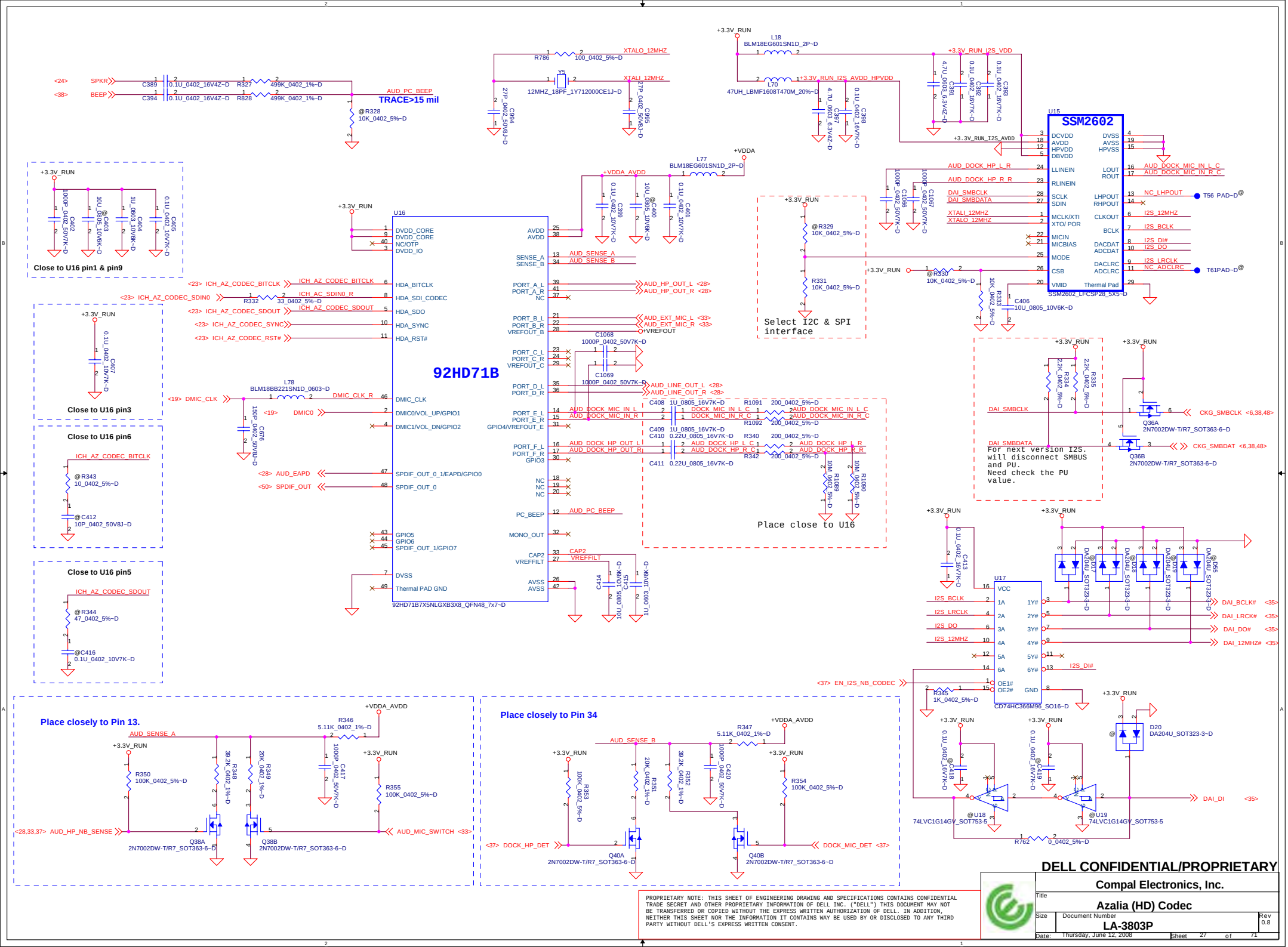

PROPRIETARY NOTE: THIS SHEET OF ENGINEERING DRAWING AND SPECIFICATIONS CONTAINS CONFIDENTIAL TRADE SECRET AND OTHER PROPRIETARY INFORMATION OF DELL INC. ("DELL") THIS DOCUMENT MAY NOT BE TRANSFERRED OR COPIED WITHOUT THE EXPRESS WRITTEN AUTHORIZATION OF DELL. IN ADDITION, NEITHER THIS SHEET NOR THE INFORMATION IT CONTAINS WAY BE USED BY OR DISCLOSED TO ANY THIRD PARTY WITHOUT DELL'S EXPRESS WRITTEN CONSENT.

DELL CONFIDENTIAL/PROPRIETARY

Compal Electronics, Inc.

Title: Azalia (HD) Codec

Size | Document Number: LA-3803P | Rev: 0.8

Date: Thursday, June 12, 2008 | Sheet 27 of 71

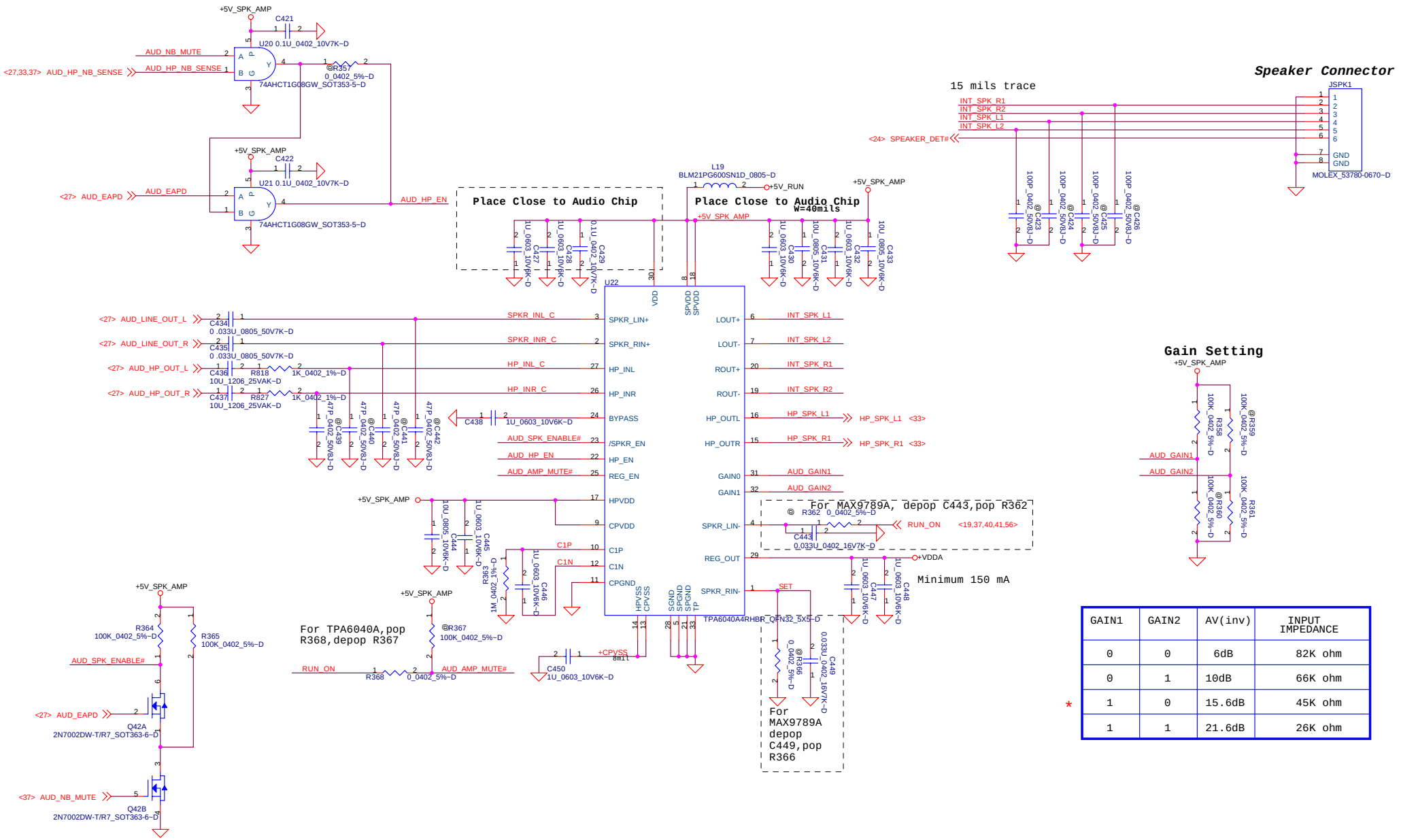

GAIN1	GAIN2	AV(inv)	INPUT IMPEDANCE
0	0	6dB	82K ohm
0	1	10dB	66K ohm
1	0	15.6dB	45K ohm
1	1	21.6dB	26K ohm

*

DELL CONFIDENTIAL/PROPRIETARY

PROPRIETARY NOTE: THIS SHEET OF ENGINEERING DRAWING AND SPECIFICATIONS CONTAINS CONFIDENTIAL TRADE SECRET AND OTHER PROPRIETARY INFORMATION OF DELL INC. ("DELL") THIS DOCUMENT MAY NOT BE TRANSFERRED OR COPIED WITHOUT THE EXPRESS WRITTEN AUTHORIZATION OF DELL. IN ADDITION, NEITHER THIS SHEET NOR THE INFORMATION IT CONTAINS WAY BE USED BY OR DISCLOSED TO ANY THIRD PARTY WITHOUT DELL'S EXPRESS WRITTEN CONSENT.

Compal Electronics, Inc.
Title: AMP and PHONE JACK
Size | Document Number: LA-3803P | Rev 0.8
Date: Thursday, June 12, 2008 | Sheet 28 of 71

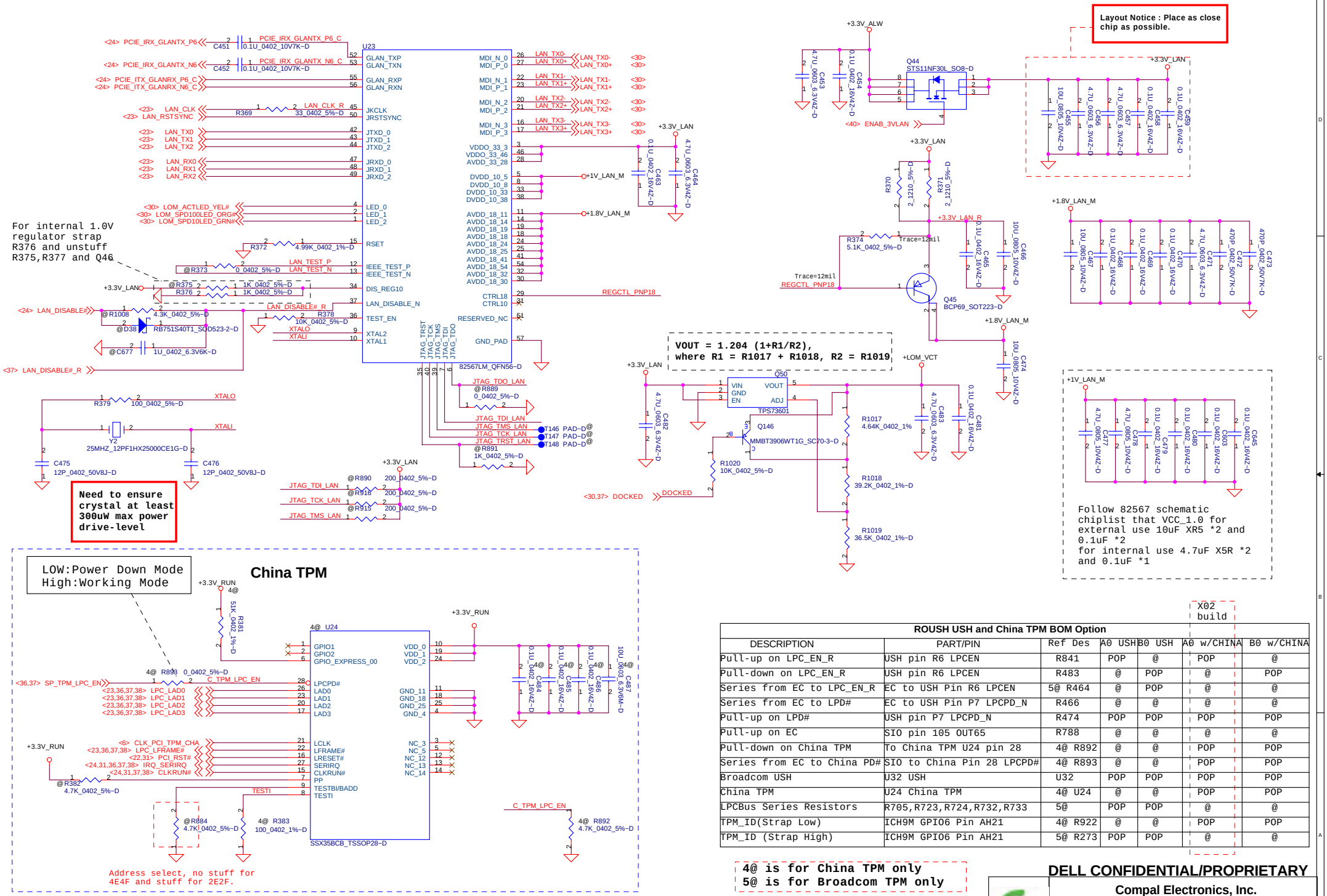

X02 build

ROUSH USH and China TPM BOM Option						
DESCRIPTION	PART/PIN	Ref Des	A0 USH	B0 USH	A0 w/CHINA	B0 w/CHINA
Pull-up on LPC_EN_R	USH pin R6 LPCEN	R841	POP	@	POP	@
Pull-down on LPC_EN_R	USH pin R6 LPCEN	R483	@	POP	@	POP
Series from EC to LPC_EN_R	EC to USH Pin R6 LPCEN	5@ R464	@	POP	@	@
Series from EC to LPD#	EC to USH Pin P7 LPCPD_N	R466	@	@	@	@
Pull-up on LPD#	USH pin P7 LPCPD_N	R474	POP	POP	POP	POP
Pull-up on EC	SIO pin 105 OUT65	R788	@	@	@	@
Pull-down on China TPM	To China TPM U24 pin 28	4@ R892	@	@	POP	POP
Series from EC to China PD#	SIO to China Pin 28 LPCPD#	4@ R893	@	@	POP	POP
Broadcom USH	U32 USH	U32	POP	POP	POP	POP
China TPM	U24 China TPM	4@ U24	@	@	POP	POP
LPCBus Series Resistors	R705,R723,R724,R732,R733	5@	POP	POP	@	@
TPM_ID(Strap Low)	ICH9M GPIO6 Pin AH21	4@ R922	@	@	POP	POP
TPM_ID (Strap High)	ICH9M GPIO6 Pin AH21	5@ R273	POP	POP	@	@

4@ is for China TPM only
5@ is for Broadcom TPM only

PROPRIETARY NOTE: THIS SHEET OF ENGINEERING DRAWING AND SPECIFICATIONS CONTAINS CONFIDENTIAL TRADE SECRET AND OTHER PROPRIETARY INFORMATION OF DELL INC. ("DELL") THIS DOCUMENT MAY NOT BE TRANSFERRED OR COPIED WITHOUT THE EXPRESS WRITTEN AUTHORIZATION OF DELL. IN ADDITION, NEITHER THIS SHEET NOR THE INFORMATION IT CONTAINS WAY BE USED BY OR DISCLOSED TO ANY THIRD PARTY WITHOUT DELL'S EXPRESS WRITTEN CONSENT.

DELL CONFIDENTIAL/PROPRIETARY

Compal Electronics, Inc.

Title: LAN-82567LM

Size: | Document Number: LA-3803P | Rev: 0.8

Date: Thursday, June 12, 2008 | Sheet 29 of 71

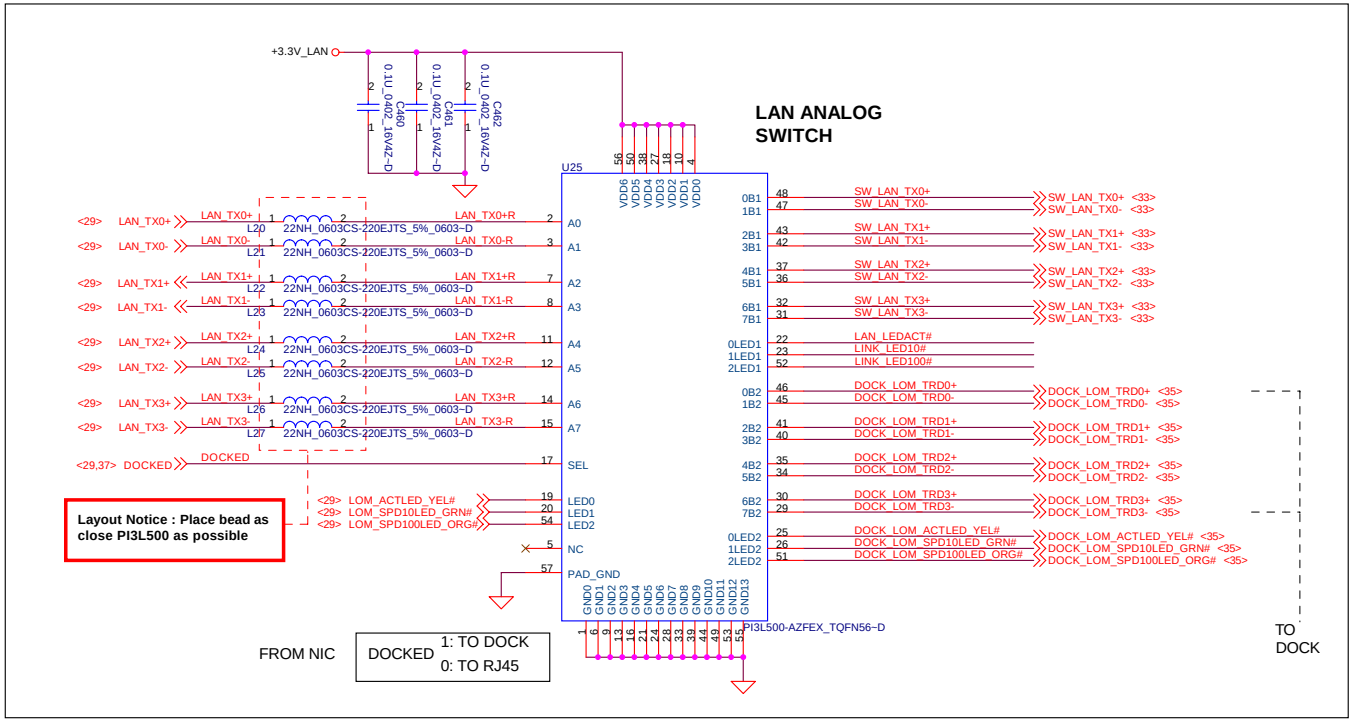

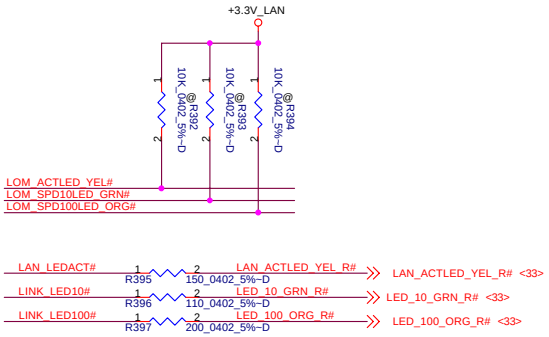

PROPRIETARY NOTE: THIS SHEET OF ENGINEERING DRAWING AND SPECIFICATIONS CONTAINS CONFIDENTIAL TRADE SECRET AND OTHER PROPRIETARY INFORMATION OF DELL INC. ("DELL") THIS DOCUMENT MAY NOT BE TRANSFERRED OR COPIED WITHOUT THE EXPRESS WRITTEN AUTHORIZATION OF DELL. IN ADDITION, NEITHER THIS SHEET NOR THE INFORMATION IT CONTAINS WAY BE USED BY OR DISCLOSED TO ANY THIRD PARTY WITHOUT DELL'S EXPRESS WRITTEN CONSENT.

DELL CONFIDENTIAL/PROPRIETARY

Compal Electronics, Inc.

Title: LAN TRANSFOMER

Size: | Document Number: LA-3803P | Rev: 0.8

Date: Thursday, June 12, 2008 | Sheet 30 of 71

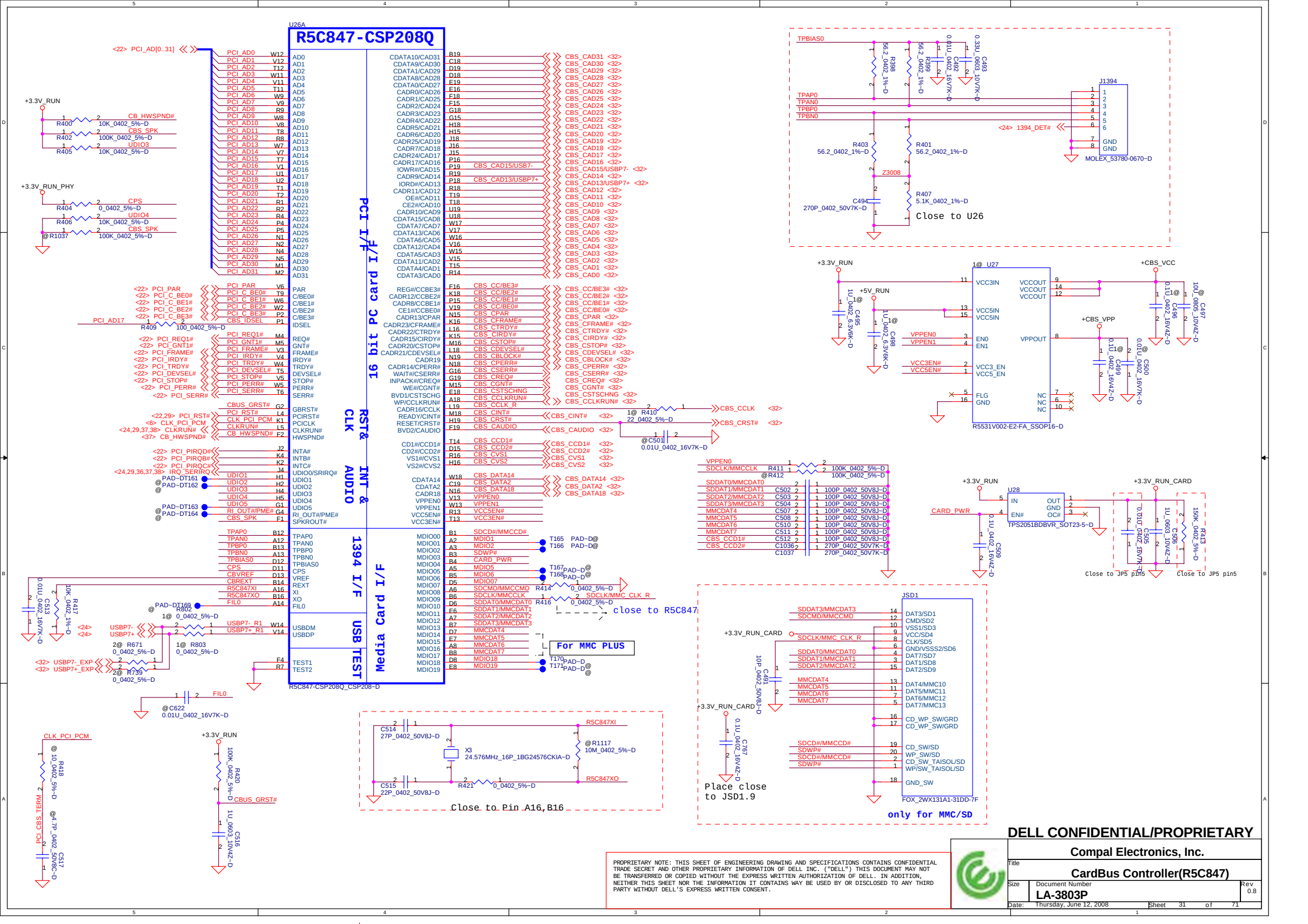

PROPRIETARY NOTE: THIS SHEET OF ENGINEERING DRAWING AND SPECIFICATIONS CONTAINS CONFIDENTIAL TRADE SECRET AND OTHER PROPRIETARY INFORMATION OF DELL INC. ("DELL") THIS DOCUMENT MAY NOT BE TRANSFERRED OR COPIED WITHOUT THE EXPRESS WRITTEN AUTHORIZATION OF DELL. IN ADDITION, NEITHER THIS SHEET NOR THE INFORMATION IT CONTAINS WAY BE USED BY OR DISCLOSED TO ANY THIRD PARTY WITHOUT DELL'S EXPRESS WRITTEN CONSENT.

DELL CONFIDENTIAL/PROPRIETARY

Compal Electronics, Inc.

Title: CardBus Controller(R5C847)

Size: | Document Number: LA-3803P | Rev: 0.8

Date: Thursday, June 12, 2008 | Sheet 31 of 71

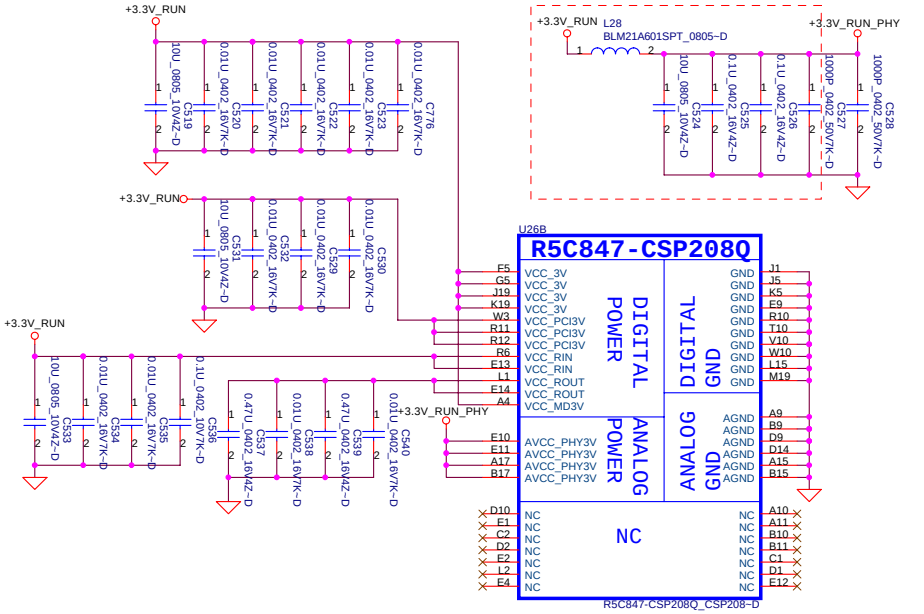

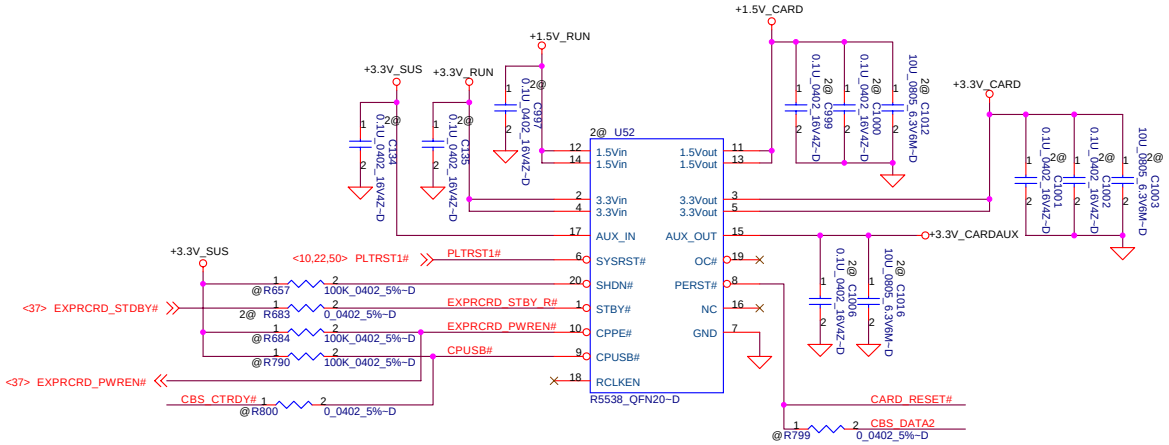

Express Card

+1.5V_CARD: Max. 650mA, Average 500mA
+3.3V_CARD: Max. 1300mA, Average 1000mA

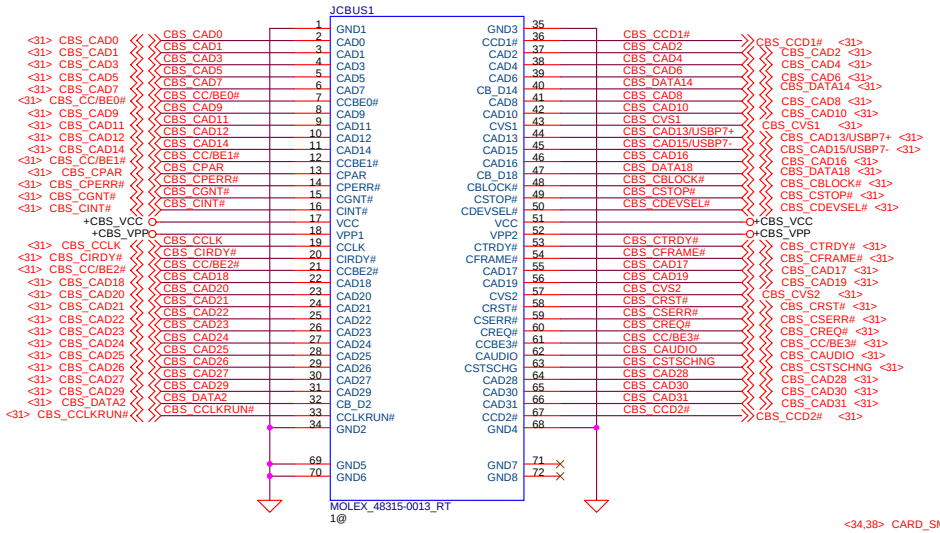

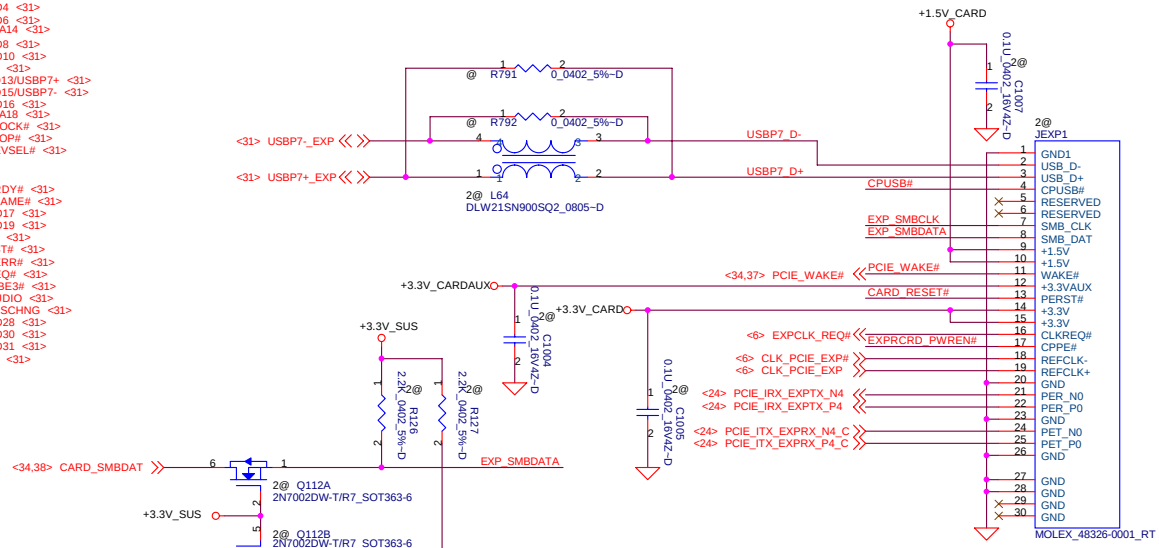

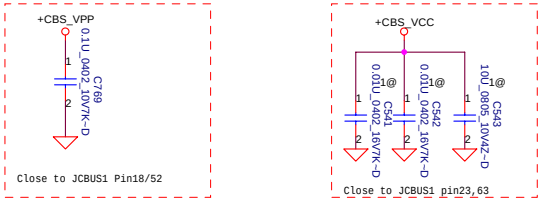

PROPRIETARY NOTE: THIS SHEET OF ENGINEERING DRAWING AND SPECIFICATIONS CONTAINS CONFIDENTIAL TRADE SECRET AND OTHER PROPRIETARY INFORMATION OF DELL INC. ("DELL") THIS DOCUMENT MAY NOT BE TRANSFERRED OR COPIED WITHOUT THE EXPRESS WRITTEN AUTHORIZATION OF DELL. IN ADDITION, NEITHER THIS SHEET NOR THE INFORMATION IT CONTAINS WAY BE USED BY OR DISCLOSED TO ANY THIRD PARTY WITHOUT DELL'S EXPRESS WRITTEN CONSENT.

DELL CONFIDENTIAL/PROPRIETARY

Compal Electronics, Inc.

Title: CardBus/SD card Socket

Size | Document Number: LA-3803P | Rev: 0.8

Date: Thursday, June 12, 2008 | Sheet 32 of 71

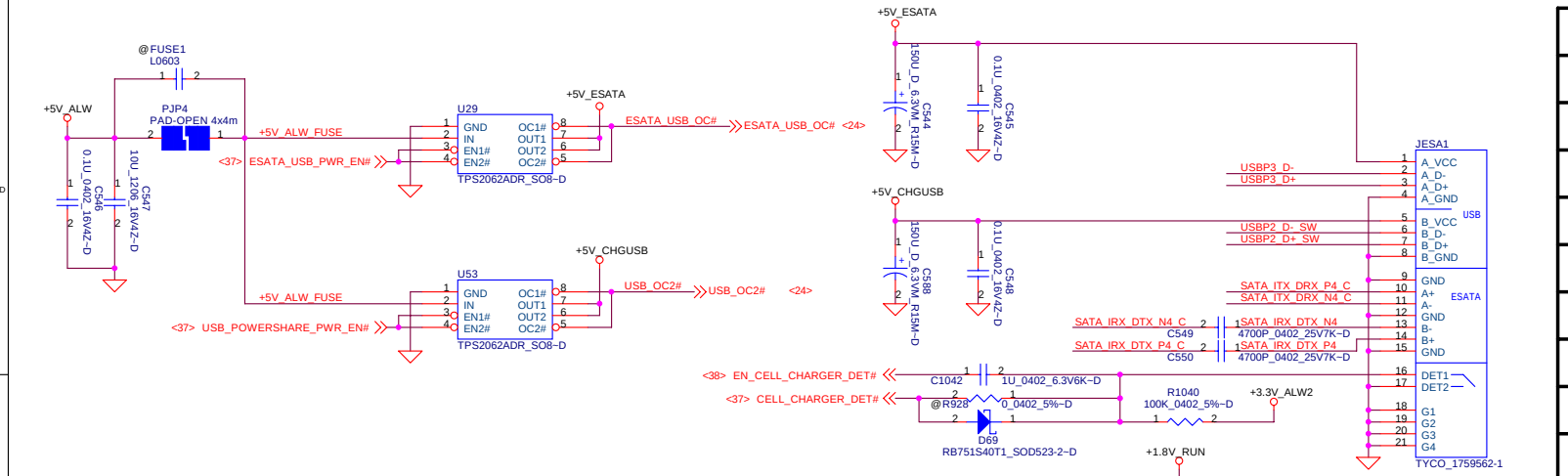

USB PORT#	DESTINATION
0	JUSB1 (Ext Right Side Top)
1	JUSB1 (Ext Right Side Bottom)
2	JESA1 (Ext Left Side Top)
3	JESA1 (Ext Left Side Bottom)
4	WLAN
5	WWAN
6	WPAN
7	Card Bus/Express card
8	DOCKING
9	DOCKING
10	USH->BIO
11	Camera

Output Swing Control

SEL2_ [A:B]	Swing
* 0	1x
1	1.2x

Output De-emphasis Adjustment

SEL3_ [A:B]	De-emphasis
* 0	0dB
1	-3.5dB

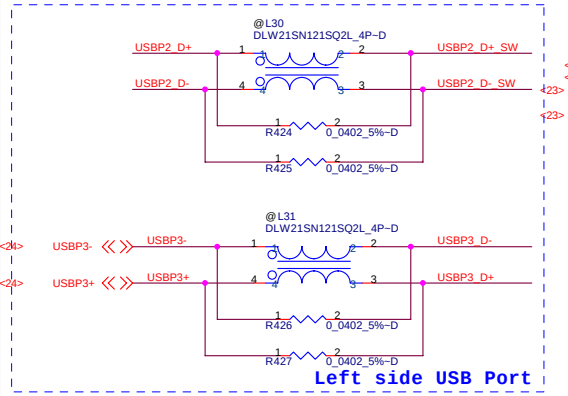

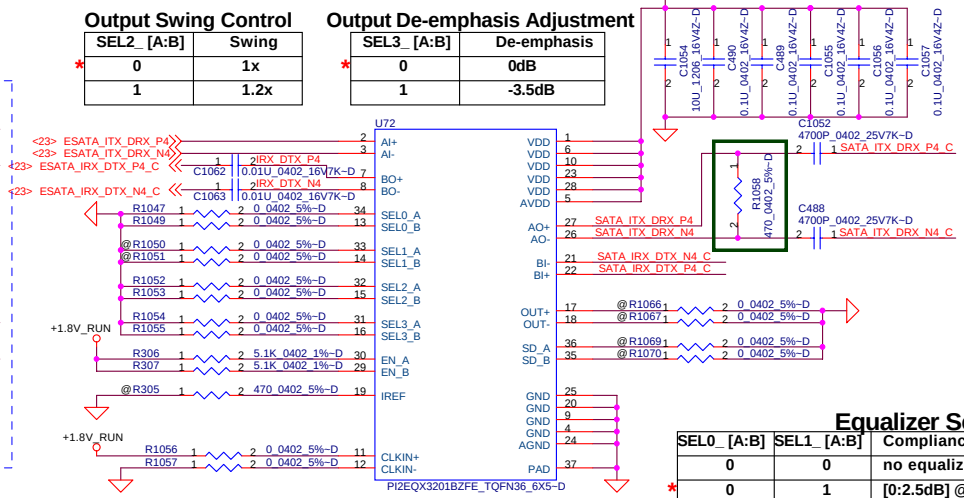

Equalizer Selection

SEL0_ [A:B]	SEL1_ [A:B]	Compliance Channel
0	0	no equalization
* 0	1	[0:2.5dB] @ 1.6 GHz
1	0	[2.5:4.5dB] @ 1.6 GHz
1	1	[4.5:6.5dB] @ 1.6 GHz

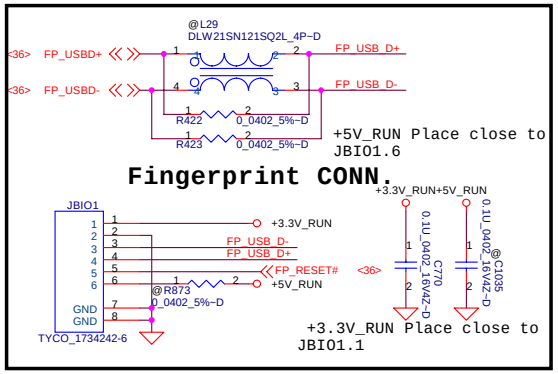

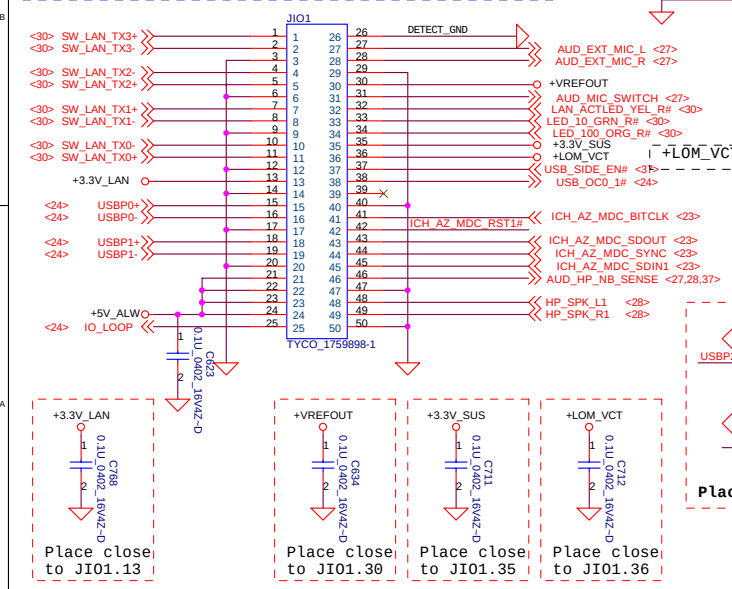

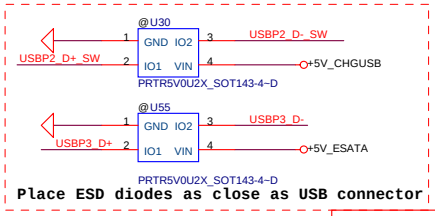

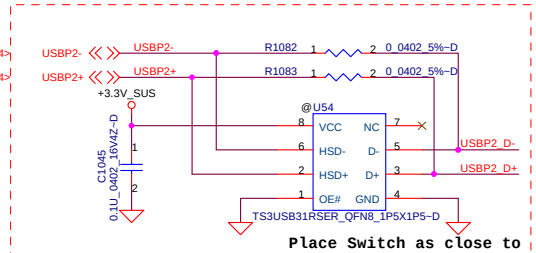

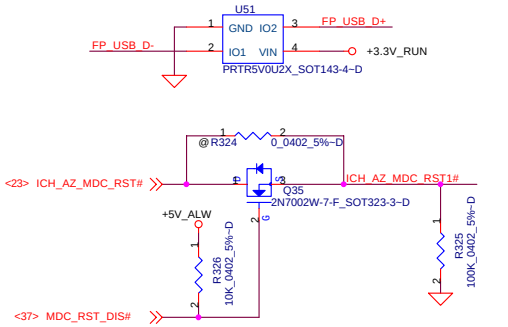

DELL CONFIDENTIAL/PROPRIETARY

PROPRIETARY NOTE: THIS SHEET OF ENGINEERING DRAWING AND SPECIFICATIONS CONTAINS CONFIDENTIAL TRADE SECRET AND OTHER PROPRIETARY INFORMATION OF DELL INC. ("DELL") THIS DOCUMENT MAY NOT BE TRANSFERRED OR COPIED WITHOUT THE EXPRESS WRITTEN AUTHORIZATION OF DELL. IN ADDITION, NEITHER THIS SHEET NOR THE INFORMATION IT CONTAINS WAY BE USED BY OR DISCLOSED TO ANY THIRD PARTY WITHOUT DELL'S EXPRESS WRITTEN CONSENT.

Compal Electronics, Inc.

Title: USB 2.0 PORT

Size: | Document Number: LA-3803P | Rev: 0.8

Date: Thursday, June 12, 2008 | Sheet 33 of 71

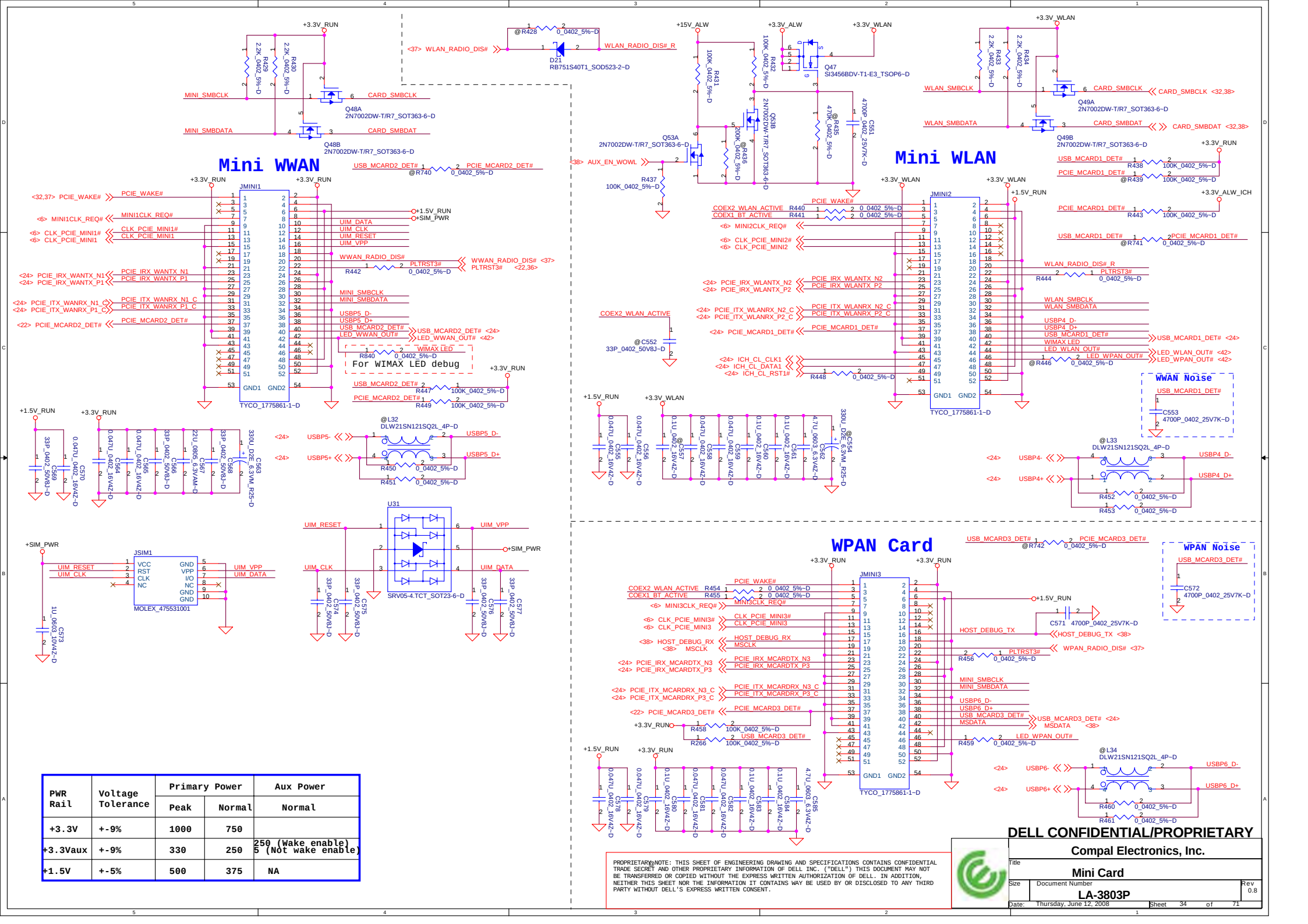

PWR Rail	Voltage Tolerance	Primary Power		Aux Power
		Peak	Normal	Normal
+3.3V	+-9%	1000	750	
+3.3Vaux	+-9%	330	250	250 (Wake enable) 5 (Not wake enable)
+1.5V	+-5%	500	375	NA

PROPRIETARY NOTE: THIS SHEET OF ENGINEERING DRAWING AND SPECIFICATIONS CONTAINS CONFIDENTIAL TRADE SECRET AND OTHER PROPRIETARY INFORMATION OF DELL INC. ("DELL") THIS DOCUMENT MAY NOT BE TRANSFERRED OR COPIED WITHOUT THE EXPRESS WRITTEN AUTHORIZATION OF DELL. IN ADDITION, NEITHER THIS SHEET NOR THE INFORMATION IT CONTAINS WAY BE USED BY OR DISCLOSED TO ANY THIRD PARTY WITHOUT DELL'S EXPRESS WRITTEN CONSENT.

DELL CONFIDENTIAL/PROPRIETARY

Compal Electronics, Inc.

Title: Mini Card

Size: | Document Number: LA-3803P | Rev: 0.8

Date: Thursday, June 12, 2008 | Sheet 34 of 71

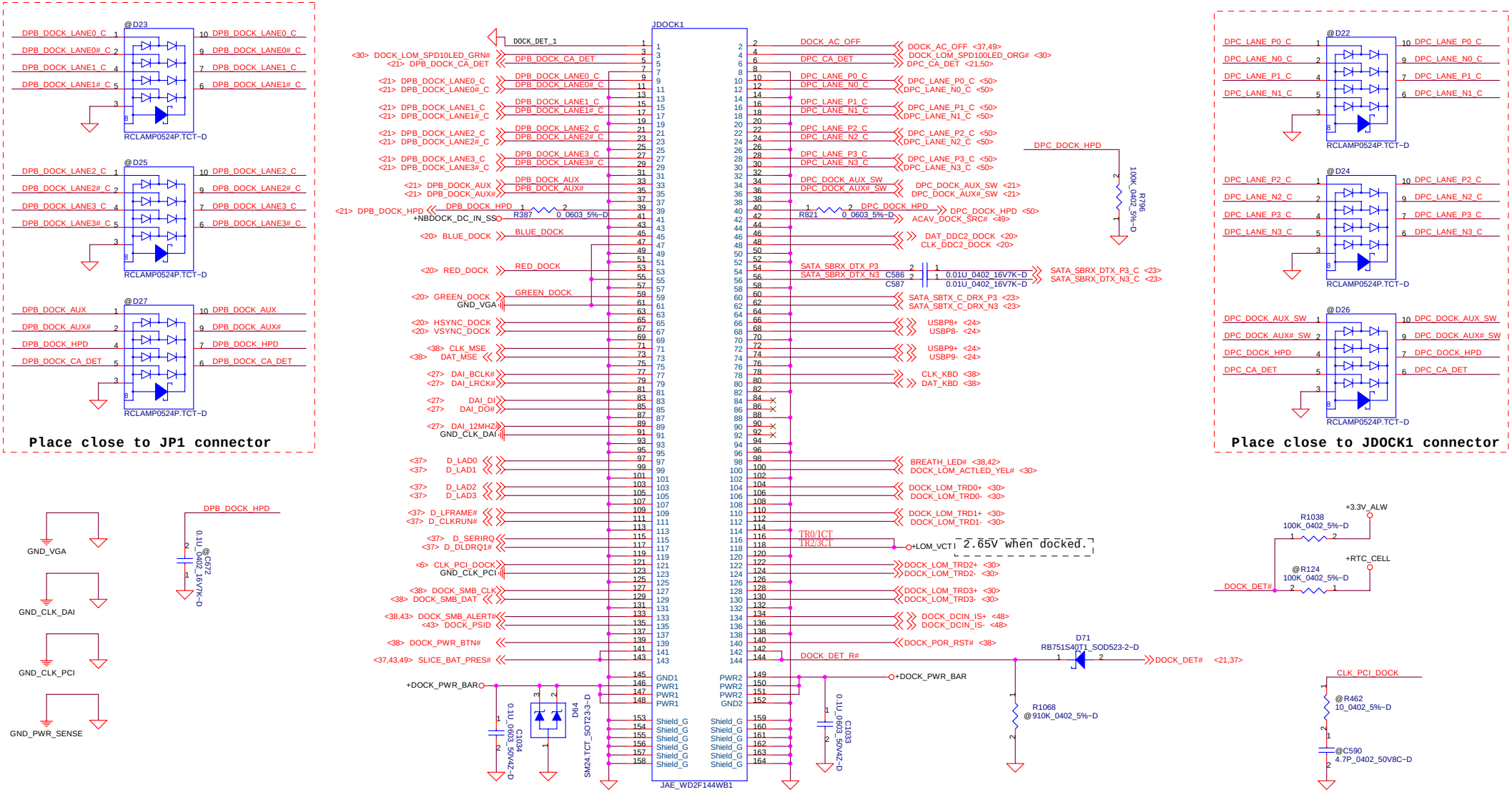

PROPRIETARY NOTE: THIS SHEET OF ENGINEERING DRAWING AND SPECIFICATIONS CONTAINS CONFIDENTIAL TRADE SECRET AND OTHER PROPRIETARY INFORMATION OF DELL INC. ("DELL") THIS DOCUMENT MAY NOT BE TRANSFERRED OR COPIED WITHOUT THE EXPRESS WRITTEN AUTHORIZATION OF DELL. IN ADDITION, NEITHER THIS SHEET NOR THE INFORMATION IT CONTAINS WAY BE USED BY OR DISCLOSED TO ANY THIRD PARTY WITHOUT DELL'S EXPRESS WRITTEN CONSENT.

Compal Electronics, Inc.			
Title: DOCKING CONN			
Size	Document Number: LA-3803P		Rev 0.8
Date: Thursday, June 12, 2008	Sheet 35 of 71		

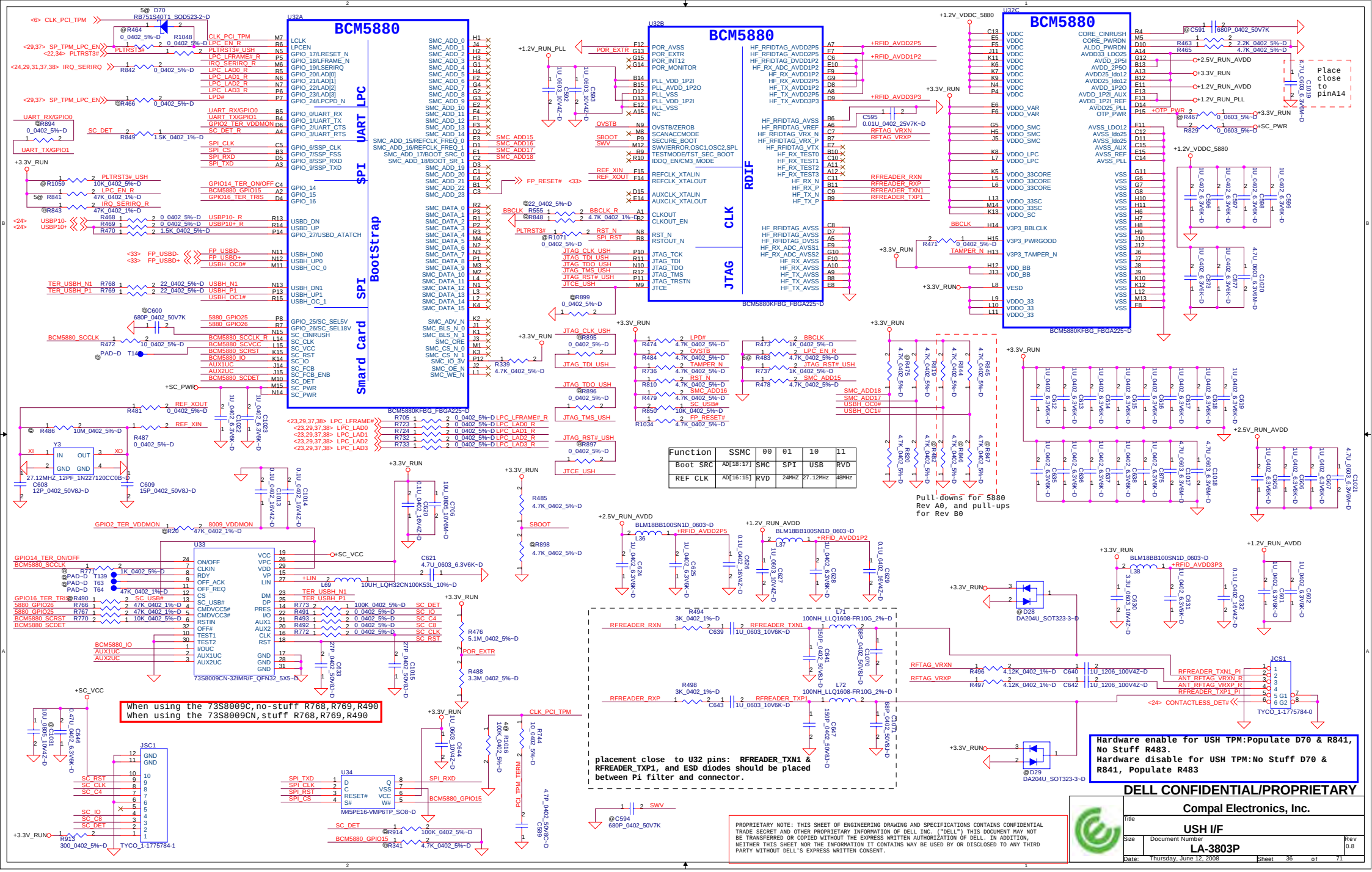
BCM5880
U32A
U32B
U32C
BootStrap
UART LPC
SPI
Smard Card
RDIF
CLK
JTAG
BCM5880KFBG_FBGA225-D
Function | SSMC | 00 | 01 | 10 | 11
Boot SRC | AD[18:17] | SMC | SPI | USB | RVD
REF CLK | AD[16:15] | RVD | 24MHZ | 27.12MHz | 48MHz
Pull-downs for 5880 Rev A0, and pull-ups for Rev B0
U33
73S8009CN-32IMR/F_QFN32_5X5-D
When using the 73S8009C,no-stuff R768,R769,R490
When using the 73S8009CN,stuff R768,R769,R490
JSC1
TYCO_1-1775784-1
U34
M45PE16-VMP6TP_SO8-D
placement close to U32 pins: RFREADER_TXN1 & RFREADER_TXP1, and ESD diodes should be placed between Pi filter and connector.
JCS1
TYCO_1-1775784-0
Hardware enable for USH TPM:Populate D70 & R841, No Stuff R483.
Hardware disable for USH TPM:No Stuff D70 & R841, Populate R483
DELL CONFIDENTIAL/PROPRIETARY
Compal Electronics, Inc.
USH I/F
LA-3803P
Date: Thursday, June 12, 2008
Sheet 36 of 71

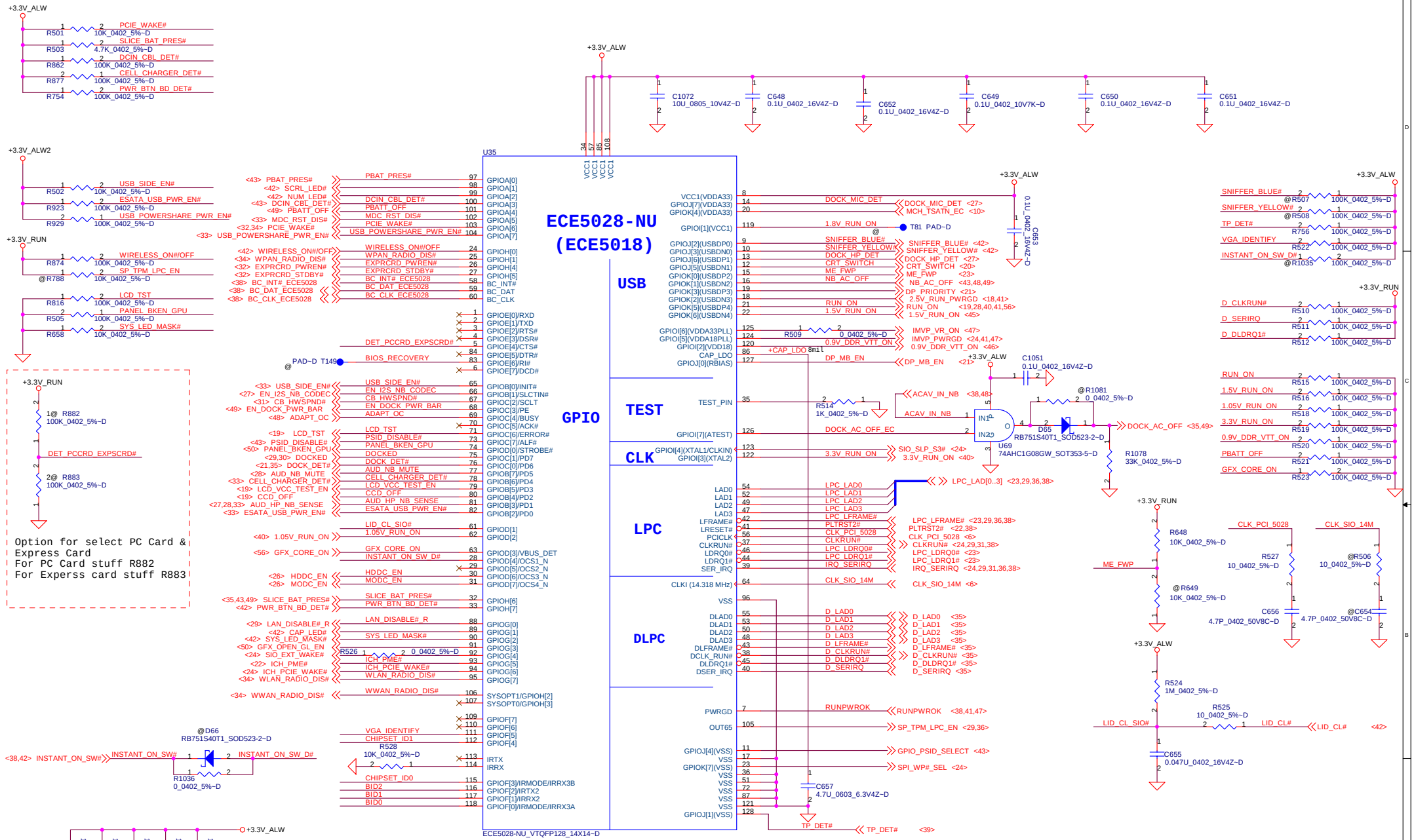

BID2	BID1	BID0	REV
0	0	0	X00
0	0	1	X01
0	1	0	X02
0	1	1	X03
1	0	0	X04
1	0	1	X05
1	1	0	X06
1	1	1	X07

CHIPSET_ID0	CHIPSET_ID1	Note
0	0	
0	0	

DELL CONFIDENTIAL/PROPRIETARY

PROPRIETARY NOTE: THIS SHEET OF ENGINEERING DRAWING AND SPECIFICATIONS CONTAINS CONFIDENTIAL TRADE SECRET AND OTHER PROPRIETARY INFORMATION OF DELL INC. ("DELL") THIS DOCUMENT MAY NOT BE TRANSFERRED OR COPIED WITHOUT THE EXPRESS WRITTEN AUTHORIZATION OF DELL. IN ADDITION, NEITHER THIS SHEET NOR THE INFORMATION IT CONTAINS WAY BE USED BY OR DISCLOSED TO ANY THIRD PARTY WITHOUT DELL'S EXPRESS WRITTEN CONSENT.

Compal Electronics, Inc.

Title: ECE5028

Size: | Document Number: LA-3803P | Rev: 0.8

Date: Thursday, June 12, 2008 | Sheet 37 of 71

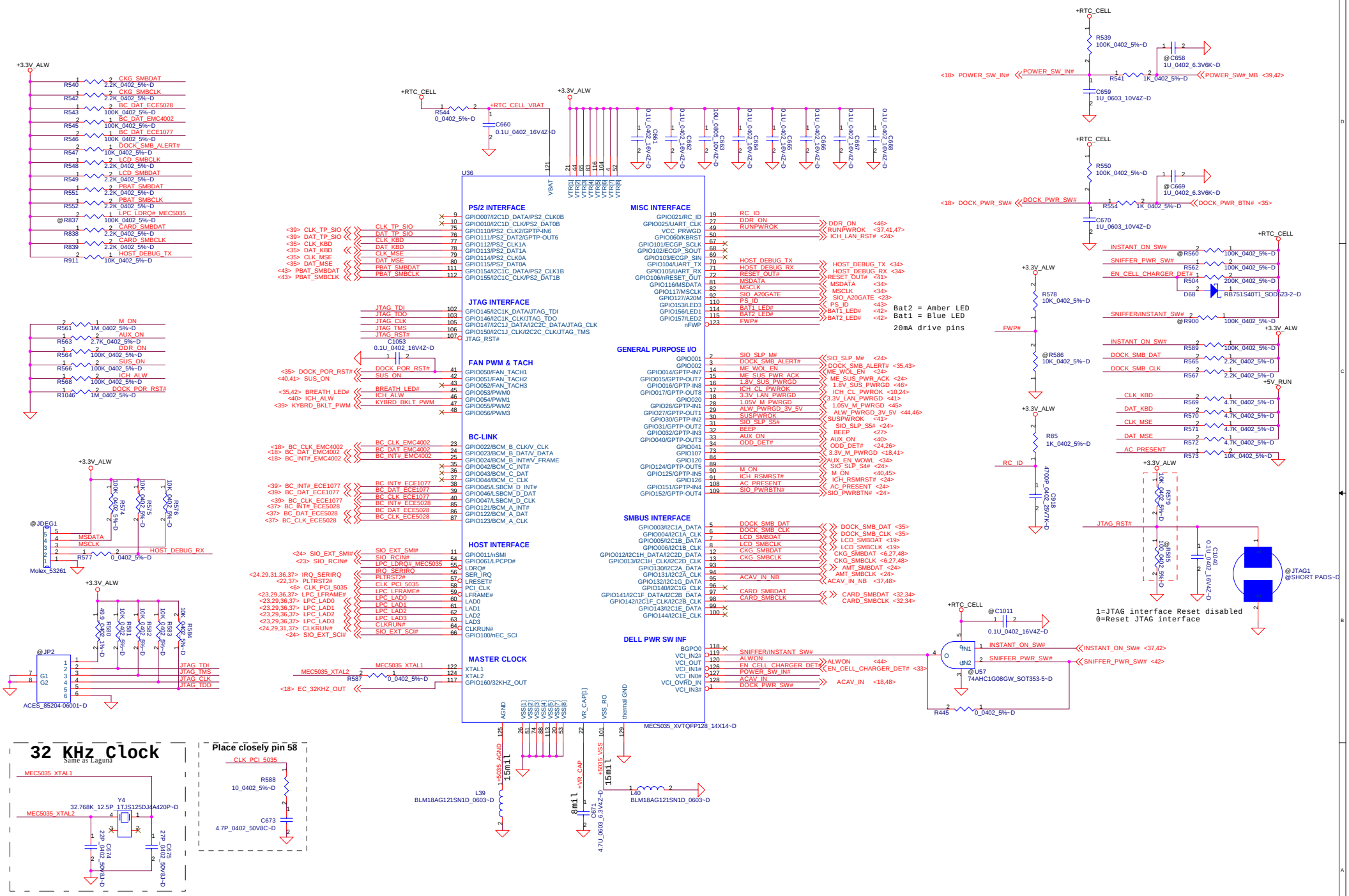

DELL CONFIDENTIAL/PROPRIETARY

PROPRIETARY NOTE: THIS SHEET OF ENGINEERING DRAWING AND SPECIFICATIONS CONTAINS CONFIDENTIAL TRADE SECRET AND OTHER PROPRIETARY INFORMATION OF DELL INC. ("DELL") THIS DOCUMENT MAY NOT BE TRANSFERRED OR COPIED WITHOUT THE EXPRESS WRITTEN AUTHORIZATION OF DELL. IN ADDITION, NEITHER THIS SHEET NOR THE INFORMATION IT CONTAINS WAY BE USED BY OR DISCLOSED TO ANY THIRD PARTY WITHOUT DELL'S EXPRESS WRITTEN CONSENT.

Compal Electronics, Inc.

Title	EMC5035
Size	
Document Number	LA-3803P
Rev	0.8
Date: Thursday, June 12, 2008	Sheet 38 of 71

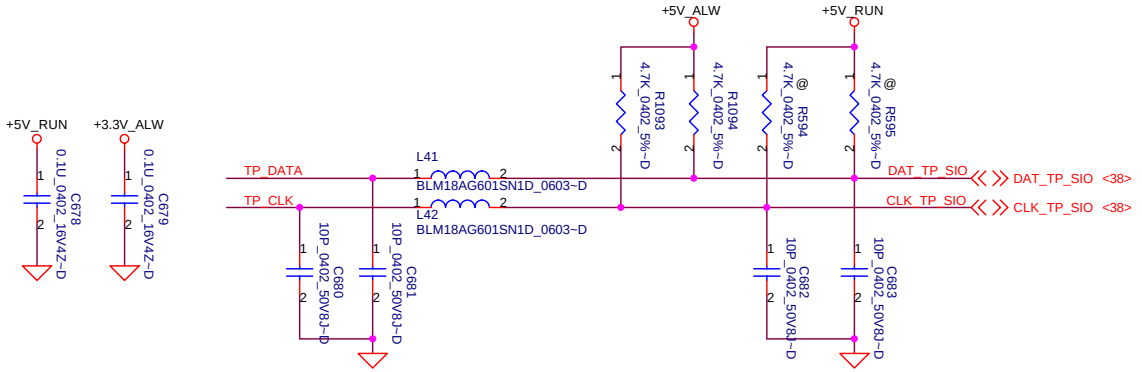

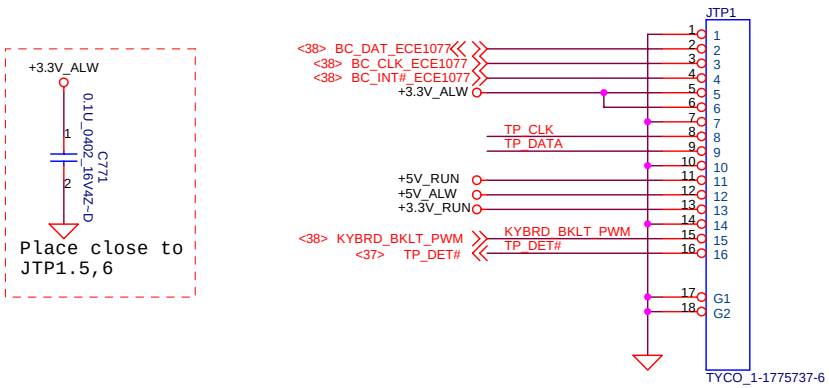

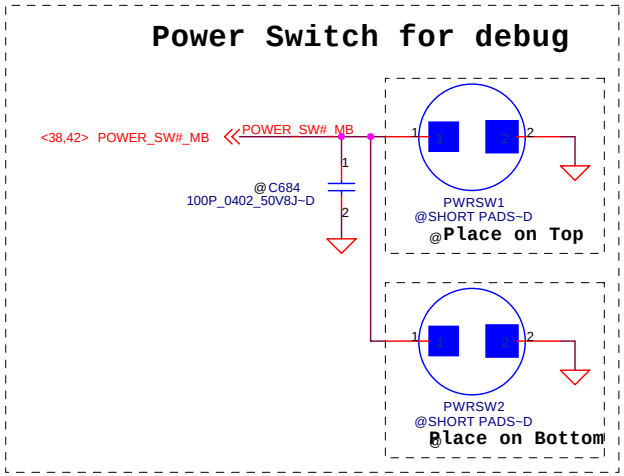

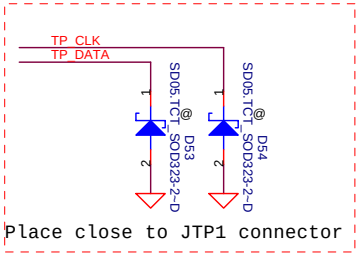

PROPRIETARY NOTE: THIS SHEET OF ENGINEERING DRAWING AND SPECIFICATIONS CONTAINS CONFIDENTIAL TRADE SECRET AND OTHER PROPRIETARY INFORMATION OF DELL INC. ("DELL") THIS DOCUMENT MAY NOT BE TRANSFERRED OR COPIED WITHOUT THE EXPRESS WRITTEN AUTHORIZATION OF DELL. IN ADDITION, NEITHER THIS SHEET NOR THE INFORMATION IT CONTAINS WAY BE USED BY OR DISCLOSED TO ANY THIRD PARTY WITHOUT DELL'S EXPRESS WRITTEN CONSENT.

DELL CONFIDENTIAL/PROPRIETARY

Compal Electronics, Inc.		
Title: Touch PAD/Int KB/LID		
Size	Document Number: LA-3803P	Rev 0.8
Date: Thursday, June 12, 2008	Sheet 39 of 71	

DC/DC Interface

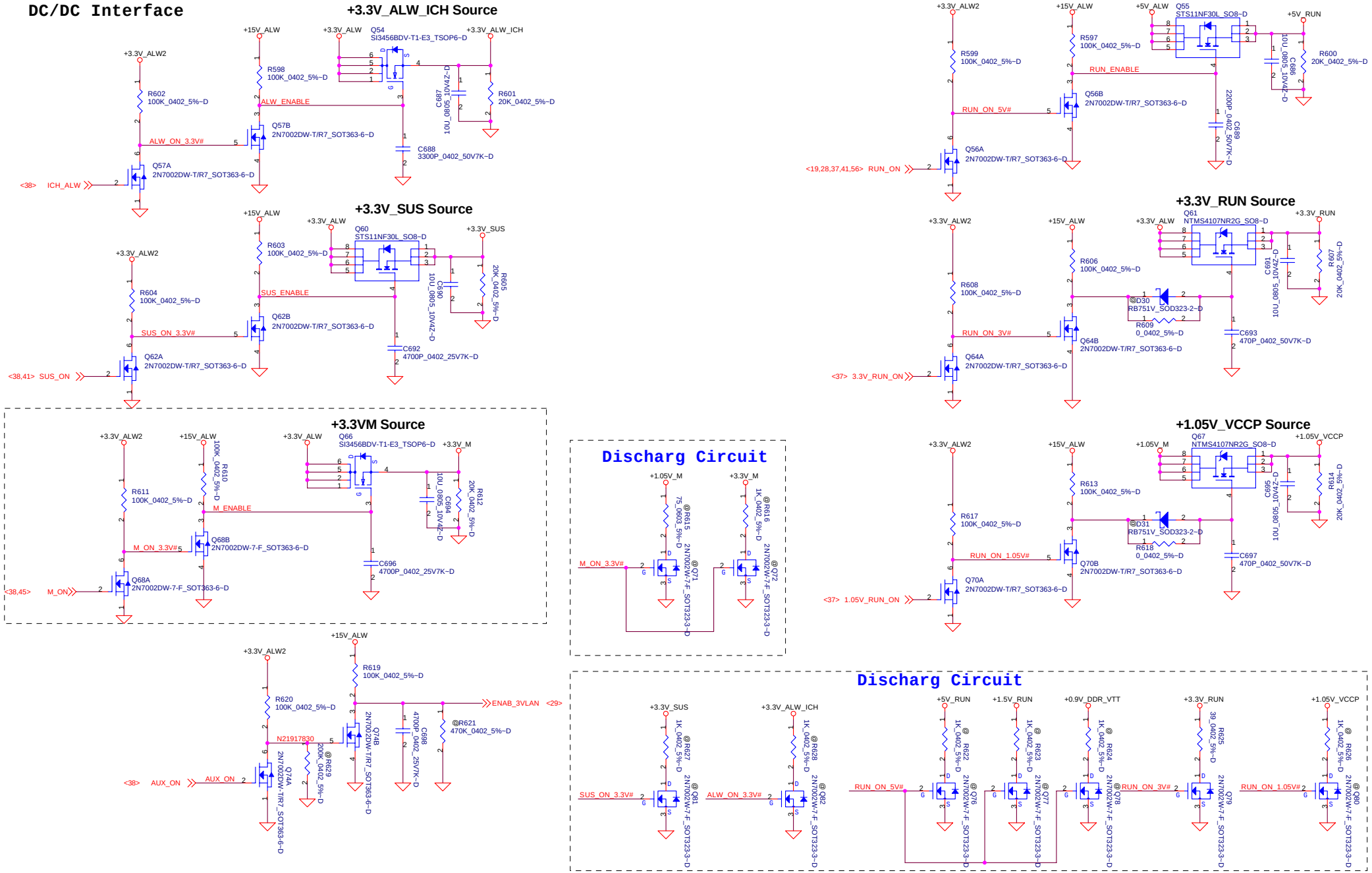

PROPRIETARY NOTE: THIS SHEET OF ENGINEERING DRAWING AND SPECIFICATIONS CONTAINS CONFIDENTIAL TRADE SECRET AND OTHER PROPRIETARY INFORMATION OF DELL INC. ("DELL") THIS DOCUMENT MAY NOT BE TRANSFERRED OR COPIED WITHOUT THE EXPRESS WRITTEN AUTHORIZATION OF DELL. IN ADDITION, NEITHER THIS SHEET NOR THE INFORMATION IT CONTAINS WAY BE USED BY OR DISCLOSED TO ANY THIRD PARTY WITHOUT DELL'S EXPRESS WRITTEN CONSENT.

DELL CONFIDENTIAL/PROPRIETARY

Compal Electronics, Inc.

Title: POWER CONTROL

Size: | Document Number: LA-3803P | Rev: 0.8

Date: Thursday, June 12, 2008 | Sheet 40 of 71

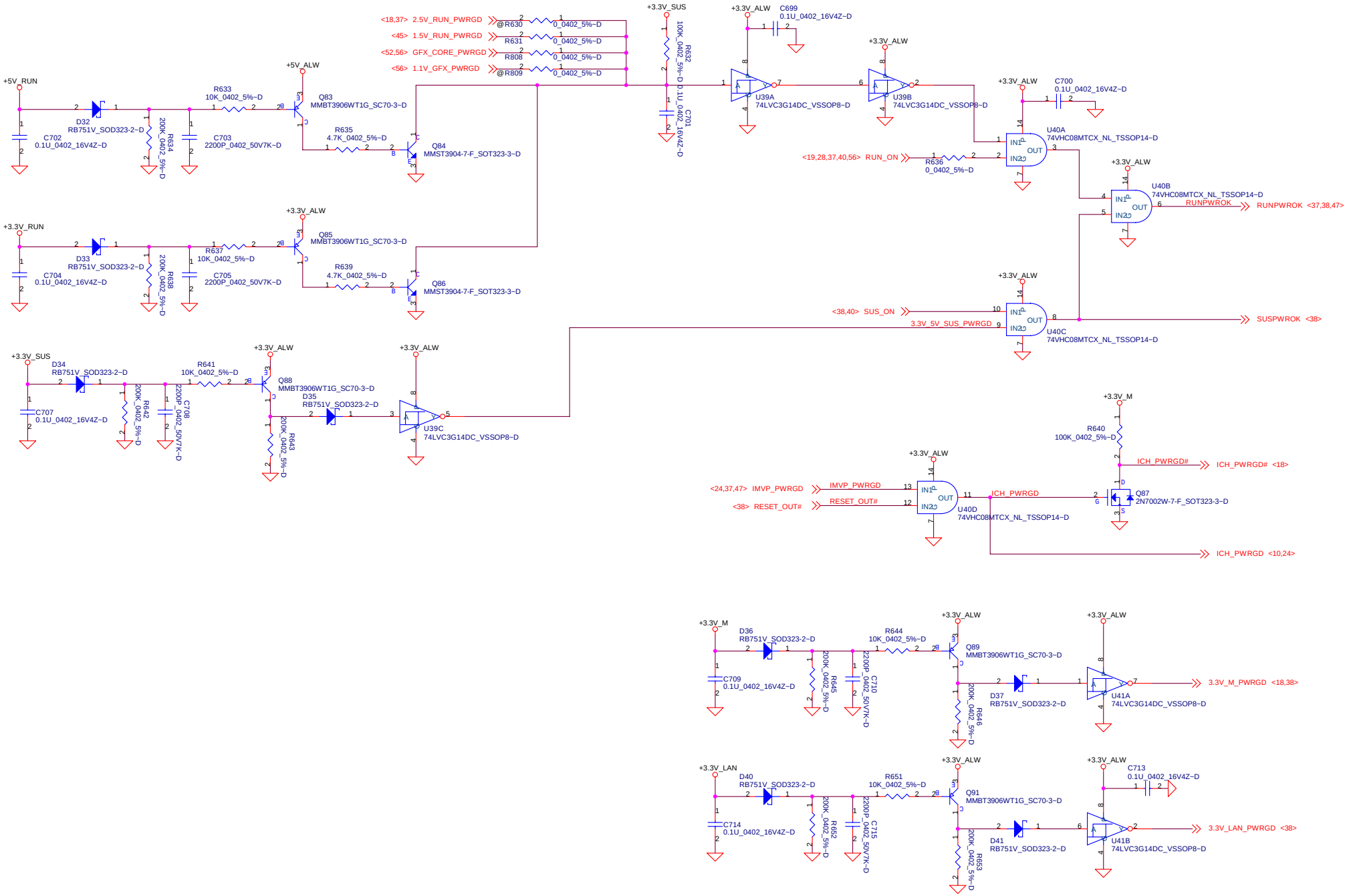

DELL CONFIDENTIAL/PROPRIETARY

PROPRIETARY NOTE: THIS SHEET OF ENGINEERING DRAWING AND SPECIFICATIONS CONTAINS CONFIDENTIAL TRADE SECRET AND OTHER PROPRIETARY INFORMATION OF DELL INC. ("DELL") THIS DOCUMENT MAY NOT BE TRANSFERRED OR COPIED WITHOUT THE EXPRESS WRITTEN AUTHORIZATION OF DELL. IN ADDITION, NEITHER THIS SHEET NOR THE INFORMATION IT CONTAINS WAY BE USED BY OR DISCLOSED TO ANY THIRD PARTY WITHOUT DELL'S EXPRESS WRITTEN CONSENT.

Compal Electronics, Inc.

Title: **Power Good**

Size | Document Number: **LA-3803P** | Rev: 0.8

Date: Thursday, June 12, 2008 | Sheet 41 of 71

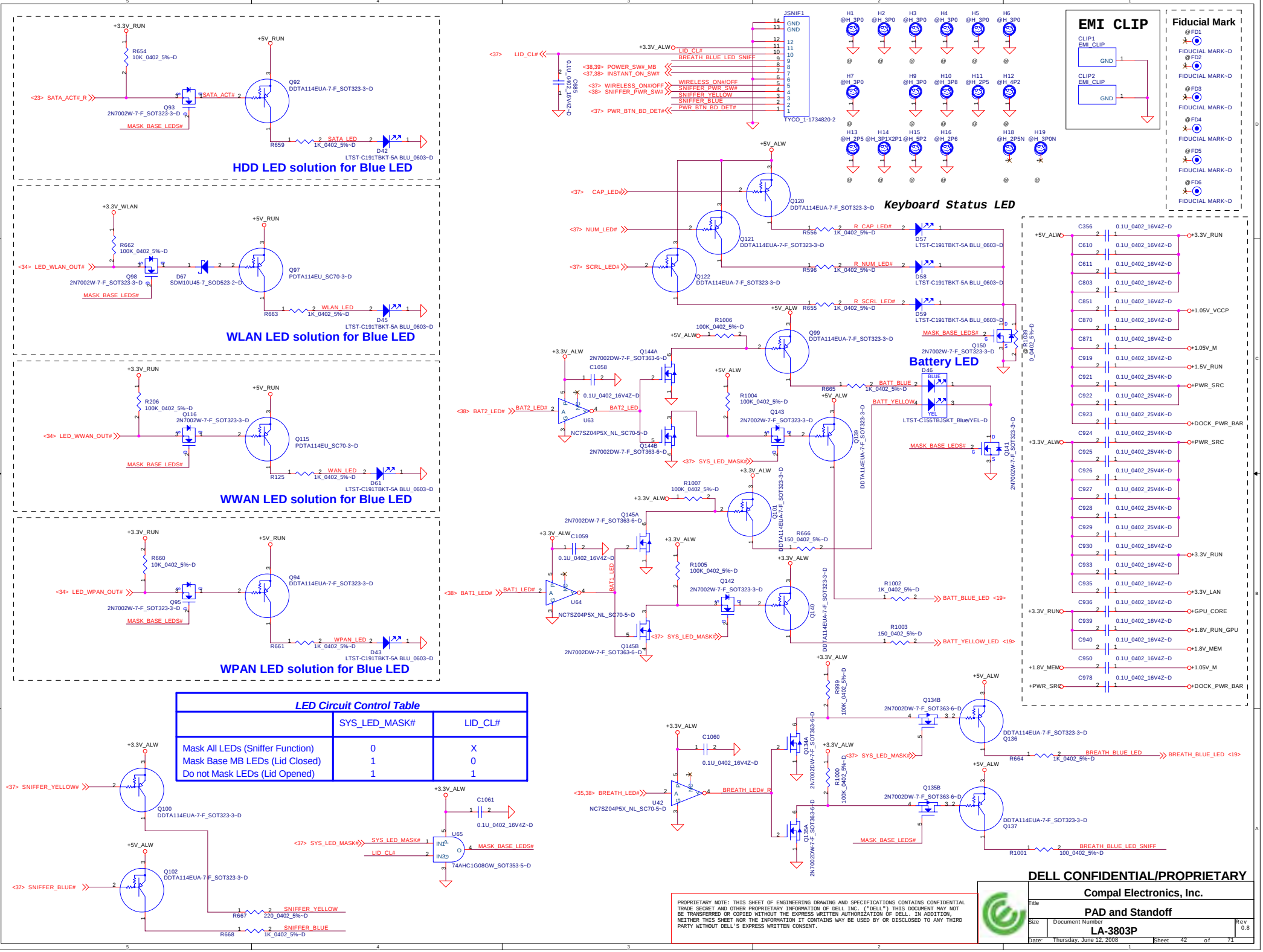

LED Circuit Control Table

	SYS_LED_MASK#	LID_CL#
Mask All LEDs (Sniffer Function)	0	X
Mask Base MB LEDs (Lid Closed)	1	0
Do not Mask LEDs (Lid Opened)	1	1

PROPRIETARY NOTE: THIS SHEET OF ENGINEERING DRAWING AND SPECIFICATIONS CONTAINS CONFIDENTIAL TRADE SECRET AND OTHER PROPRIETARY INFORMATION OF DELL INC. ("DELL") THIS DOCUMENT MAY NOT BE TRANSFERRED OR COPIED WITHOUT THE EXPRESS WRITTEN AUTHORIZATION OF DELL. IN ADDITION, NEITHER THIS SHEET NOR THE INFORMATION IT CONTAINS WAY BE USED BY OR DISCLOSED TO ANY THIRD PARTY WITHOUT DELL'S EXPRESS WRITTEN CONSENT.

DELL CONFIDENTIAL/PROPRIETARY

Compal Electronics, Inc.

Title: PAD and Standoff

Size: | Document Number: LA-3803P | Rev: 0.8

Date: Thursday, June 12, 2008 | Sheet 42 of 71

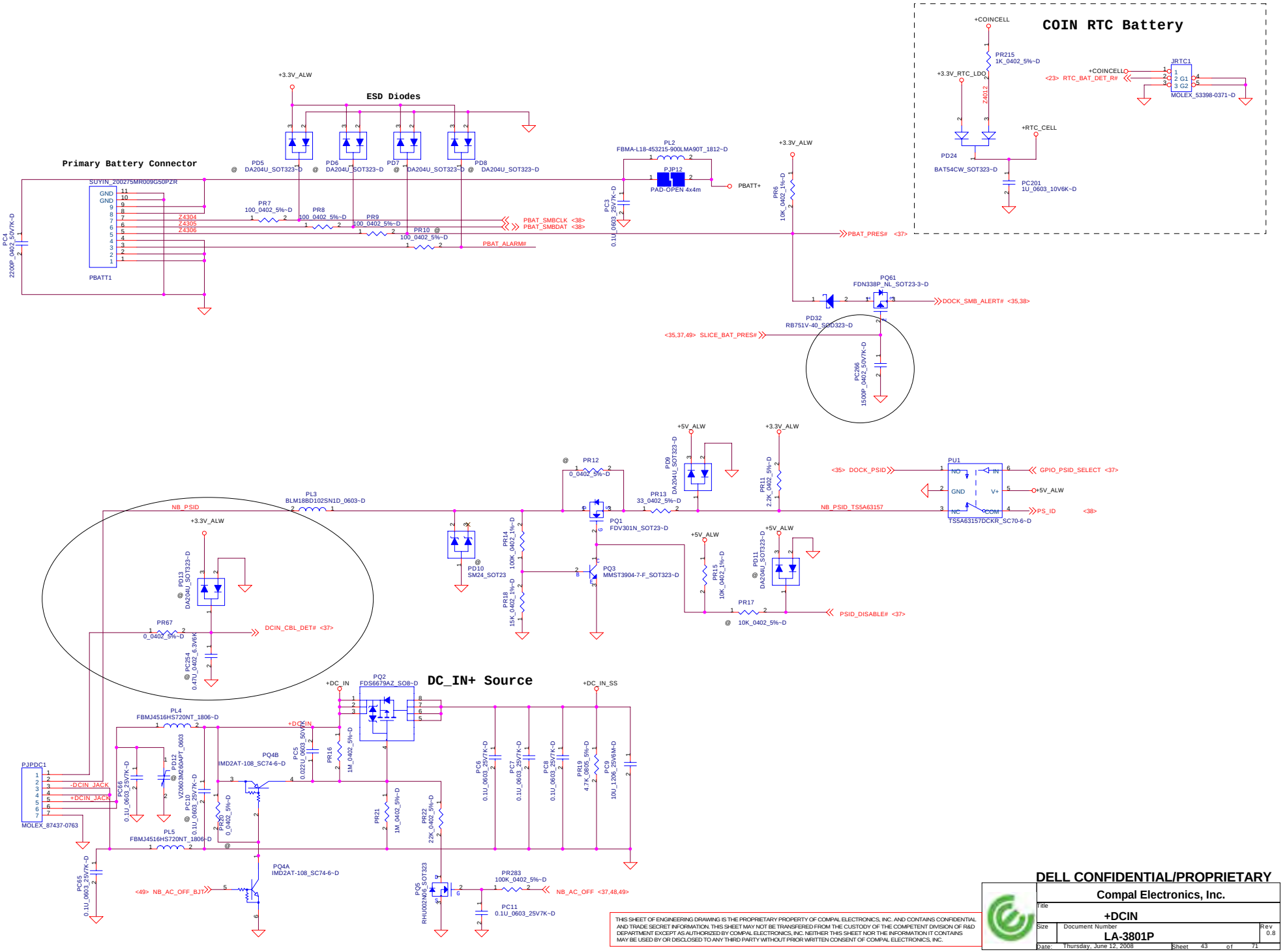

DELL CONFIDENTIAL/PROPRIETARY

Compal Electronics, Inc.

Title: +DCIN

Size: | Document Number: LA-3801P | Rev: 0.8

Date: Thursday, June 12, 2008 | Sheet 43 of 71

THIS SHEET OF ENGINEERING DRAWING IS THE PROPRIETARY PROPERTY OF COMPAL ELECTRONICS, INC. AND CONTAINS CONFIDENTIAL AND TRADE SECRET INFORMATION. THIS SHEET MAY NOT BE TRANSFERED FROM THE CUSTODY OF THE COMPETENT DIVISION OF R&D DEPARTMENT EXCEPT AS AUTHORIZED BY COMPAL ELECTRONICS, INC. NEITHER THIS SHEET NOR THE INFORMATION IT CONTAINS MAY BE USED BY OR DISCLOSED TO ANY THIRD PARTY WITHOUT PRIOR WRITTEN CONSENT OF COMPAL ELECTRONICS, INC.

+3.3V_ALWP/ +5V_ALWP/ +5V_ALW2 / +15V_ALWP

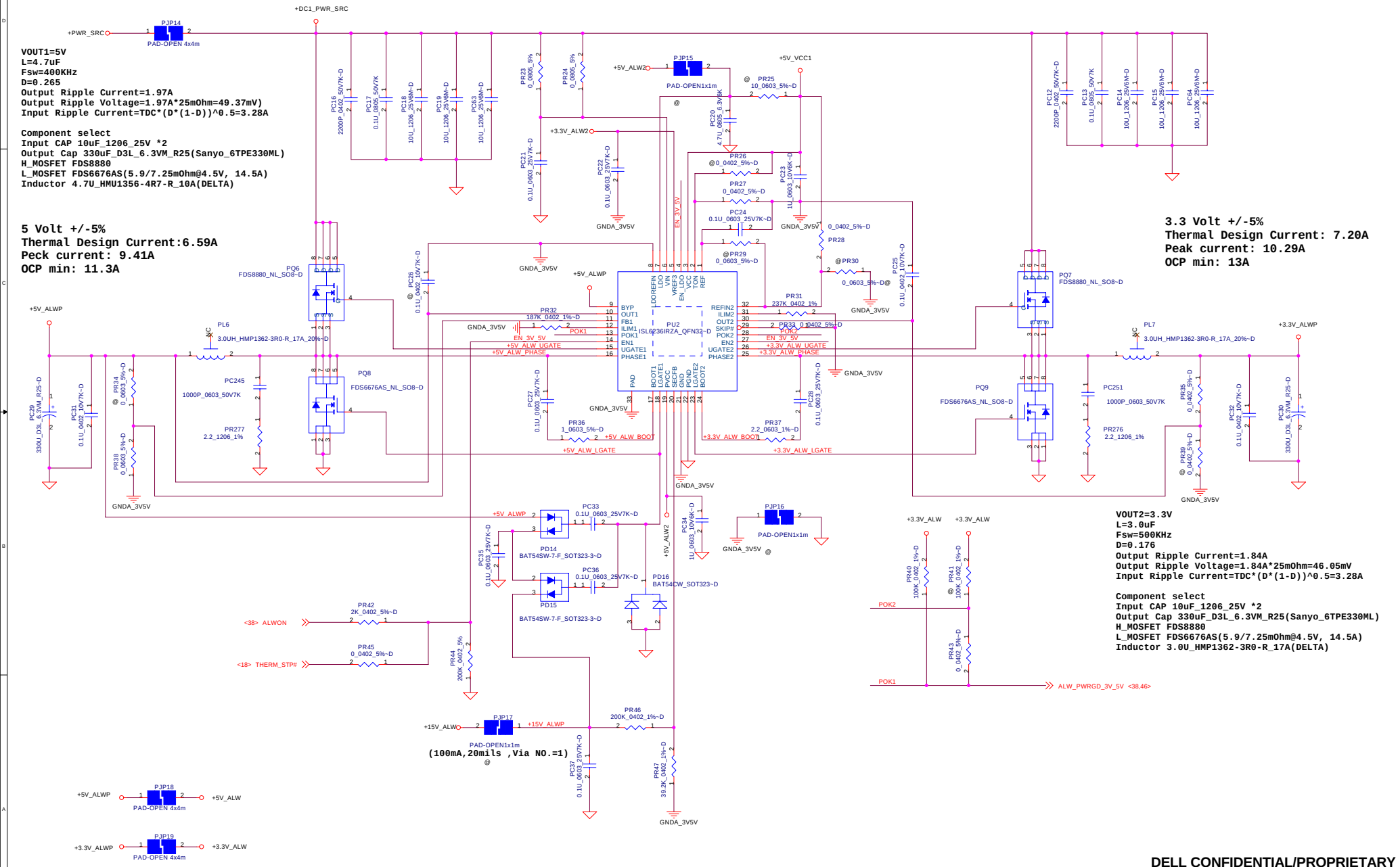

DELL CONFIDENTIAL/PROPRIETARY

THIS SHEET OF ENGINEERING DRAWING IS THE PROPRIETARY PROPERTY OF COMPAL ELECTRONICS, INC. AND CONTAINS CONFIDENTIAL AND TRADE SECRET INFORMATION. THIS SHEET MAY NOT BE TRANSFERED FROM THE CUSTODY OF THE COMPETENT DIVISION OF R&D DEPARTMENT EXCEPT AS AUTHORIZED BY COMPAL ELECTRONICS, INC. NEITHER THIS SHEET NOR THE INFORMATION IT CONTAINS

Compal Electronics, Inc.	
Title	DC/DC +3V/ +5V
Size	Document Number: LA-3803P
Rev	0.8
Date: Thursday, June 12, 2008	Sheet 44 of 71

+1.5V_RUN / +1.05V_M/ +3.3V_RTC_LDO

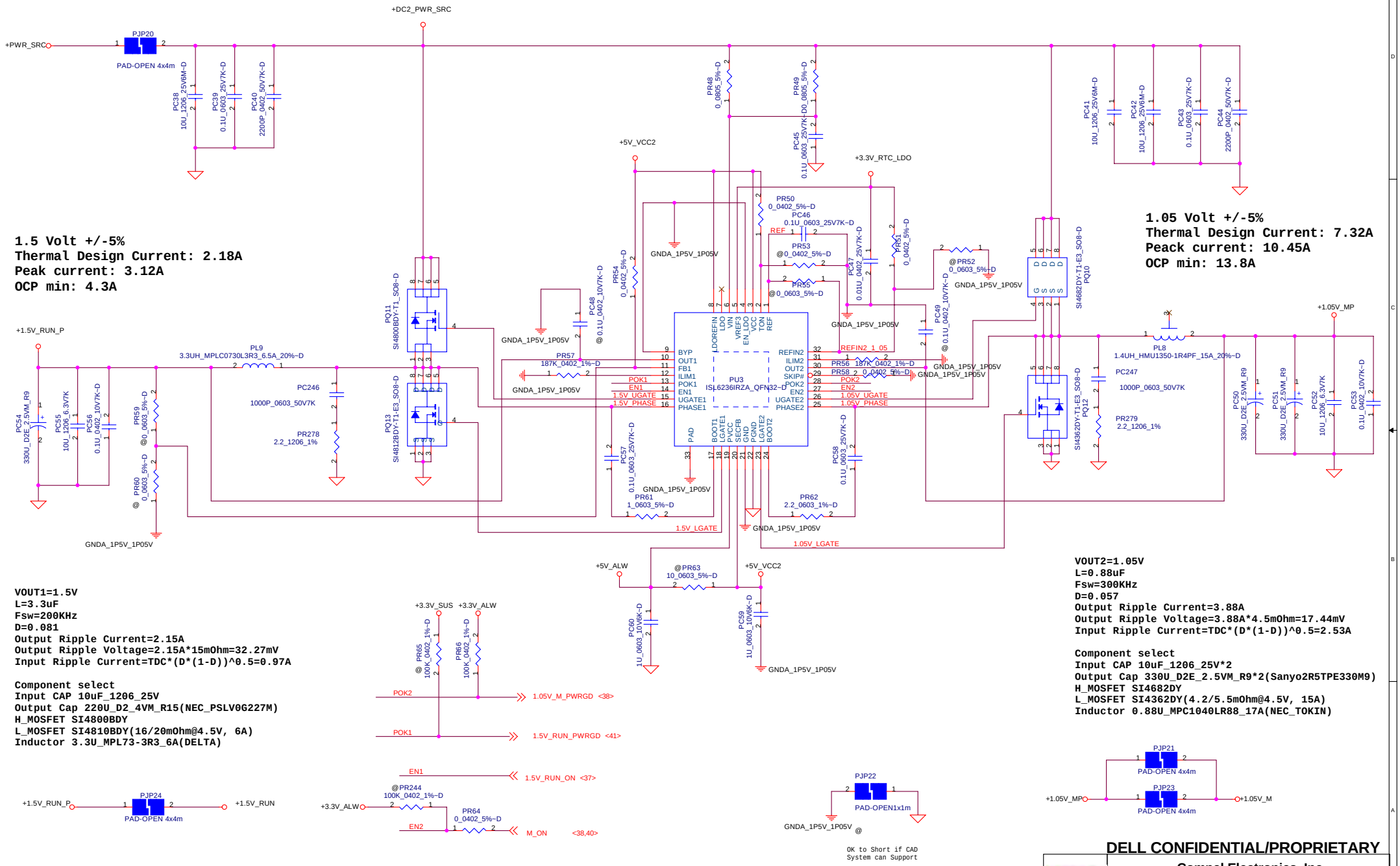

VOUT1=1.5V
L=3.3uF
Fsw=200KHz
D=0.081
Output Ripple Current=2.15A
Output Ripple Voltage=2.15A*15mOhm=32.27mV
Input Ripple Current=TDC*(D*(1-D))^0.5=0.97A

Component select
Input CAP 10uF_1206_25V
Output Cap 220U_D2_4VM_R15(NEC_PSLV0G227M)
H_MOSFET SI4800BDY
L_MOSFET SI4810BDY(16/20mOhm@4.5V, 6A)
Inductor 3.3U_MPL73-3R3_6A(DELTA)

VOUT2=1.05V
L=0.88uF
Fsw=300KHz
D=0.057
Output Ripple Current=3.88A
Output Ripple Voltage=3.88A*4.5mOhm=17.44mV
Input Ripple Current=TDC*(D*(1-D))^0.5=2.53A

Component select
Input CAP 10uF_1206_25V*2
Output Cap 330U_D2E_2.5VM_R9*2(Sanyo2R5TPE330M9)
H_MOSFET SI4682DY
L_MOSFET SI4362DY(4.2/5.5mOhm@4.5V, 15A)
Inductor 0.88U_MPC1040LR88_17A(NEC_TOKIN)

PROPRIETARY NOTE: THIS SHEET OF ENGINEERING DRAWING AND SPECIFICATIONS CONTAINS CONFIDENTIAL TRADE SECRET AND OTHER PROPRIETARY INFORMATION OF DELL INC. ("DELL") THIS DOCUMENT MAY NOT BE TRANSFERRED OR COPIED WITHOUT THE EXPRESS WRITTEN AUTHORIZATION OF DELL. IN ADDITION, NEITHER THIS SHEET NOR THE INFORMATION IT CONTAINS WAY BE USED BY OR DISCLOSED TO ANY THIRD PARTY WITHOUT DELL'S EXPRESS WRITTEN CONSENT.

THIS SHEET OF ENGINEERING DRAWING IS THE PROPRIETARY PROPERTY OF COMPAL ELECTRONICS, INC. AND CONTAINS CONFIDENTIAL AND TRADE SECRET INFORMATION. THIS SHEET MAY NOT BE TRANSFERED FROM THE CUSTODY OF THE COMPETENT DIVISION OF R&D DEPARTMENT EXCEPT AS AUTHORIZED BY COMPAL ELECTRONICS, INC. NEITHER THIS SHEET NOR THE INFORMATION IT CONTAINS

DELL CONFIDENTIAL/PROPRIETARY

Compal Electronics, Inc.		
Title: +1.5V_RUN / +1.05V_VCCP		
Size	Document Number: LA-3803P	Rev: 0.8
Date: Thursday, June 12, 2008	Sheet 45 of 71	

+1.8VSUSP/ +0.9V_DDR_VTT

DDR2 Termination

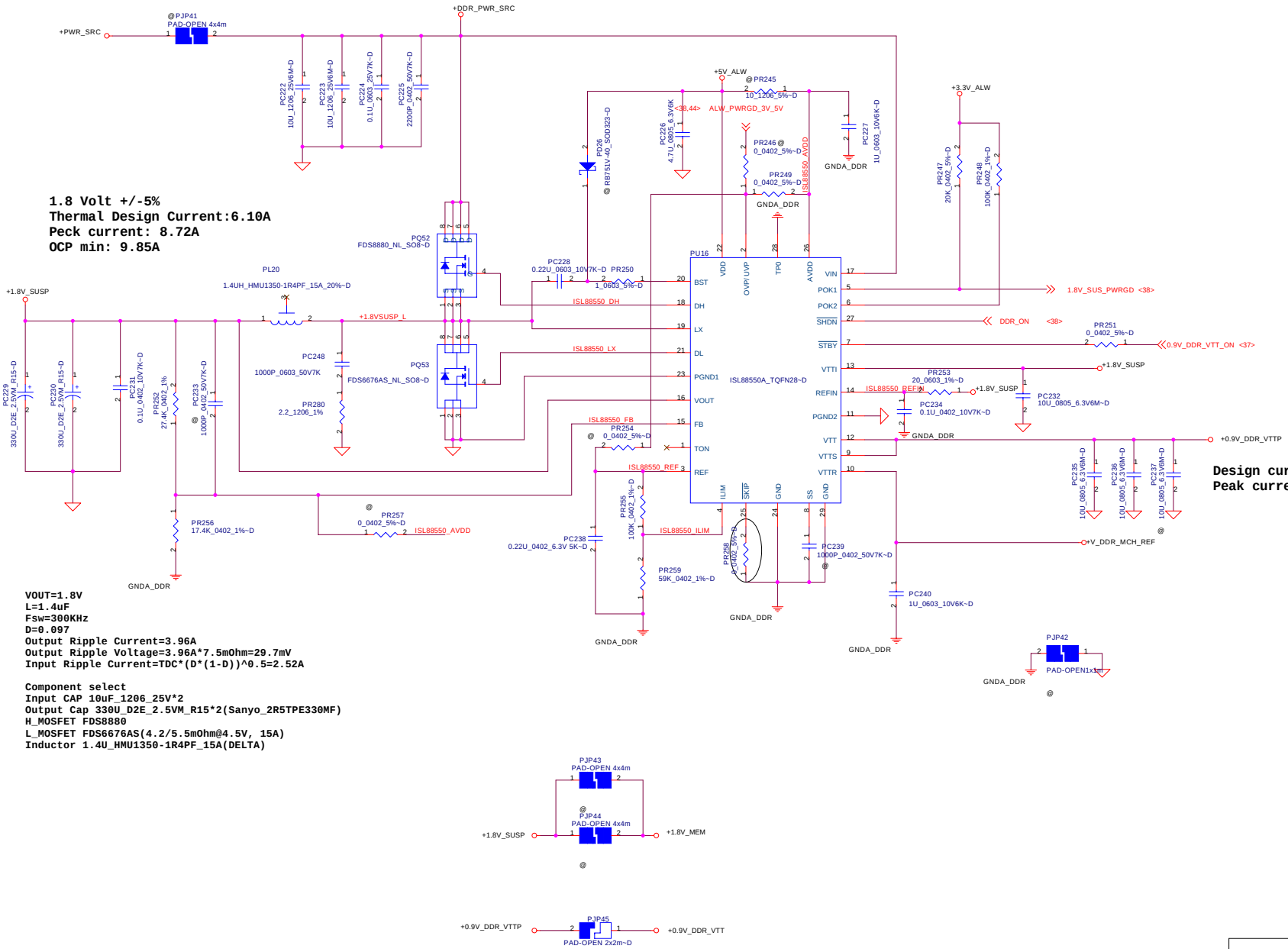

PROPRIETARY NOTE: THIS SHEET OF ENGINEERING DRAWING AND SPECIFICATIONS CONTAINS CONFIDENTIAL TRADE SECRET AND OTHER PROPRIETARY INFORMATION OF DELL INC. ("DELL") THIS DOCUMENT MAY NOT BE TRANSFERRED OR COPIED WITHOUT THE EXPRESS WRITTEN AUTHORIZATION OF DELL. IN ADDITION, NEITHER THIS SHEET NOR THE INFORMATION IT CONTAINS WAY BE USED BY OR DISCLOSED TO ANY THIRD PARTY WITHOUT DELL'S EXPRESS WRITTEN CONSENT.

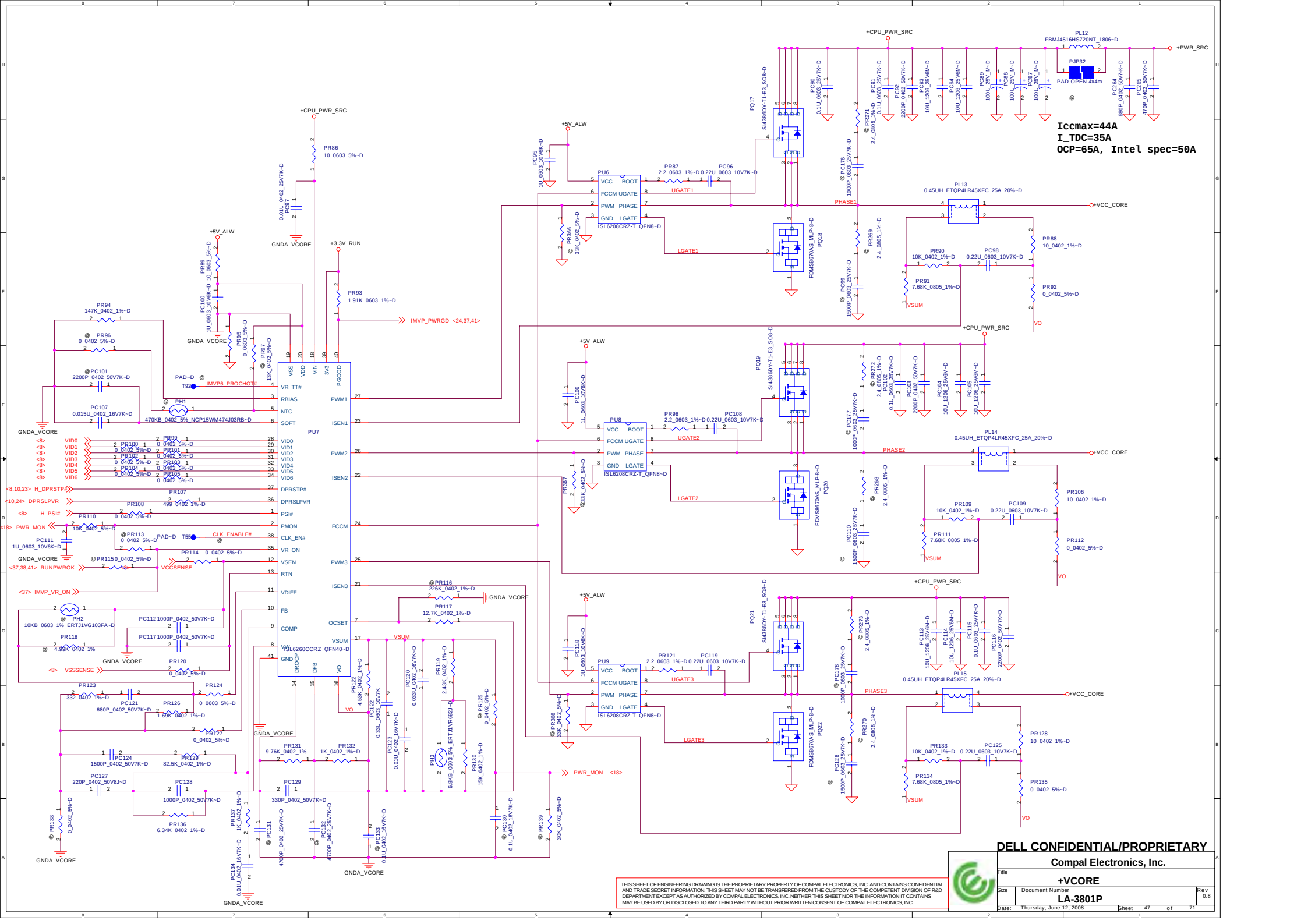

DELL CONFIDENTIAL/PROPRIETARY

Compal Electronics, Inc.

Title: +VCORE

Size: | Document Number: LA-3801P | Rev: 0.8

Date: Thursday, June 12, 2008 | Sheet 47 of 71

THIS SHEET OF ENGINEERING DRAWING IS THE PROPRIETARY PROPERTY OF COMPAL ELECTRONICS, INC. AND CONTAINS CONFIDENTIAL AND TRADE SECRET INFORMATION. THIS SHEET MAY NOT BE TRANSFERED FROM THE CUSTODY OF THE COMPETENT DIVISION OF R&D DEPARTMENT EXCEPT AS AUTHORIZED BY COMPAL ELECTRONICS, INC. NEITHER THIS SHEET NOR THE INFORMATION IT CONTAINS MAY BE USED BY OR DISCLOSED TO ANY THIRD PARTY WITHOUT PRIOR WRITTEN CONSENT OF COMPAL ELECTRONICS, INC.

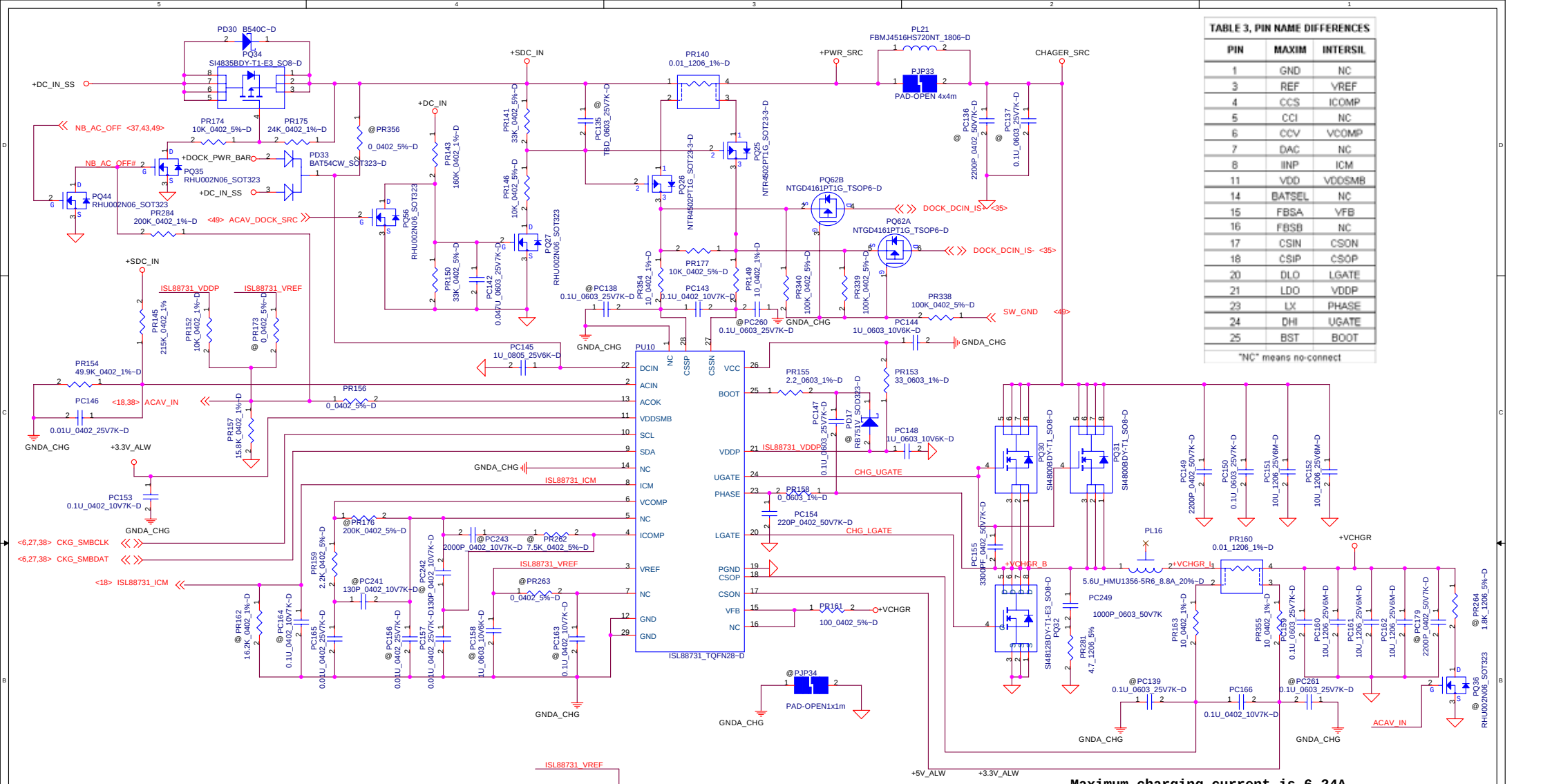

TABLE 3, PIN NAME DIFFERENCES		
PIN	MAXIM	INTERSIL
1	GND	NC
3	REF	VREF
4	CCS	ICOMP
5	CCI	NC
6	CCV	VCOMP
7	DAC	NC
8	IINP	ICM
11	VDD	VDDSMB
14	BATSEL	NC
15	FBSA	VFB
16	FBSB	NC
17	CSIN	CSON
18	CSIP	CSOP
20	DLO	LGATE
21	LDO	VDDP
23	LX	PHASE
24	DHI	UGATE
25	BST	BOOT

"NC" means no-connect

Maximum charging current is 6.24A

THIS SHEET OF ENGINEERING DRAWING IS THE PROPRIETARY PROPERTY OF COMPAL ELECTRONICS, INC. AND CONTAINS CONFIDENTIAL AND TRADE SECRET INFORMATION. THIS SHEET MAY NOT BE TRANSFERED FROM THE CUSTODY OF THE COMPETENT DIVISION OF R&D DEPARTMENT EXCEPT AS AUTHORIZED BY COMPAL ELECTRONICS, INC. NEITHER THIS SHEET NOR THE INFORMATION IT CONTAINS MAY BE USED BY OR DISCLOSED TO ANY THIRD PARTY WITHOUT PRIOR WRITTEN CONSENT OF COMPAL ELECTRONICS, INC.

DELL CONFIDENTIAL/PROPRIETARY

Compal Electronics, Inc.

Title: Charger

Size: | Document Number: LA-3801P | Rev: 0.8

Date: Thursday, June 12, 2008 | Sheet 48 of 71

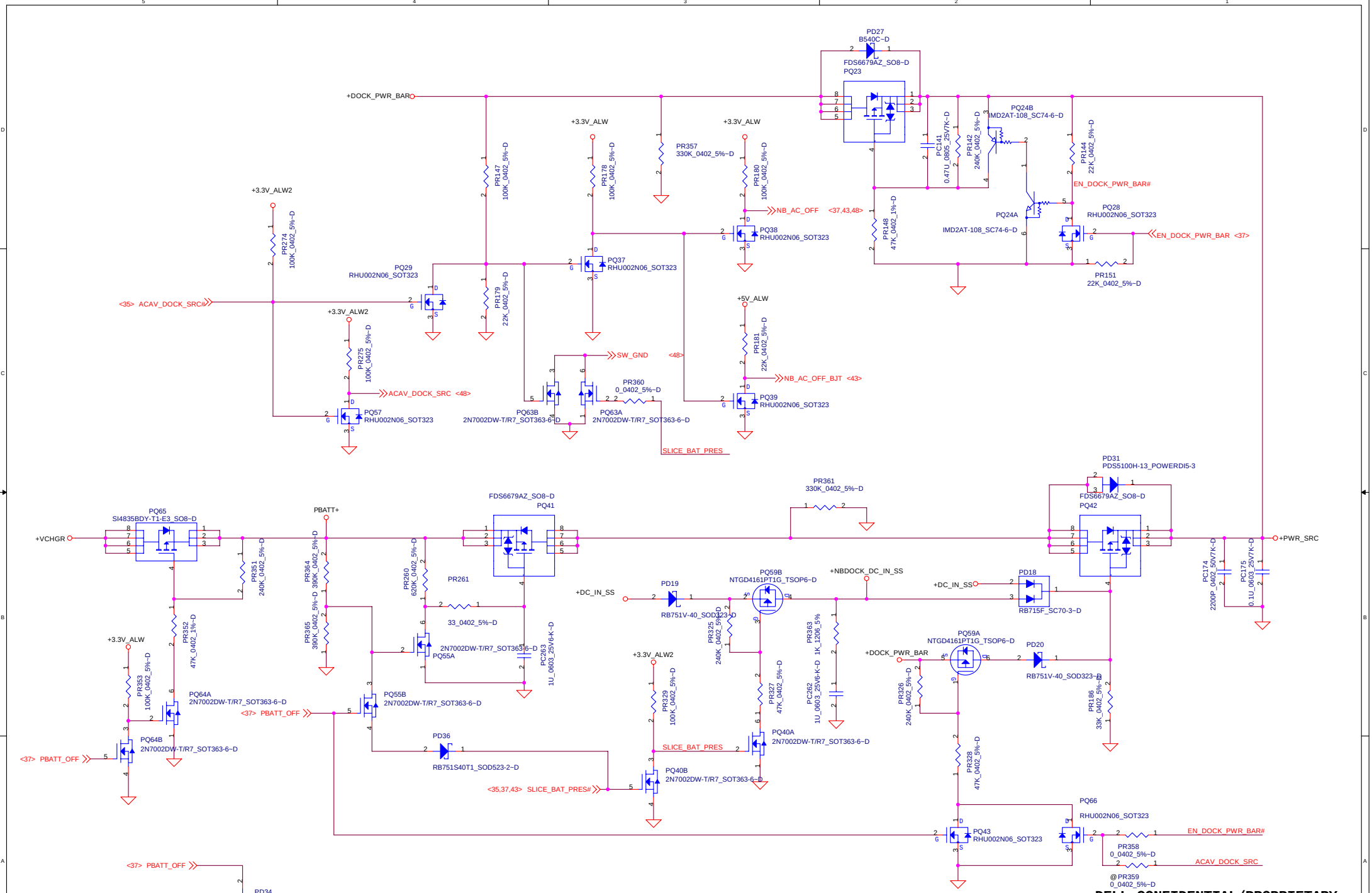

DELL CONFIDENTIAL/PROPRIETARY

PROPRIETARY NOTE: THIS SHEET OF ENGINEERING DRAWING AND SPECIFICATIONS CONTAINS CONFIDENTIAL TRADE SECRET AND OTHER PROPRIETARY INFORMATION OF DELL INC. ("DELL") THIS DOCUMENT MAY NOT BE TRANSFERRED OR COPIED WITHOUT THE EXPRESS WRITTEN AUTHORIZATION OF DELL. IN ADDITION, NEITHER THIS SHEET NOR THE INFORMATION IT CONTAINS WAY BE USED BY OR DISCLOSED TO ANY THIRD PARTY WITHOUT DELL'S EXPRESS WRITTEN CONSENT.

Compal Electronics, Inc.	
Title	Selector
Size	Document Number: LA-3803P
Rev	0.8
Date: Thursday, June 12, 2008	Sheet 49 of 71

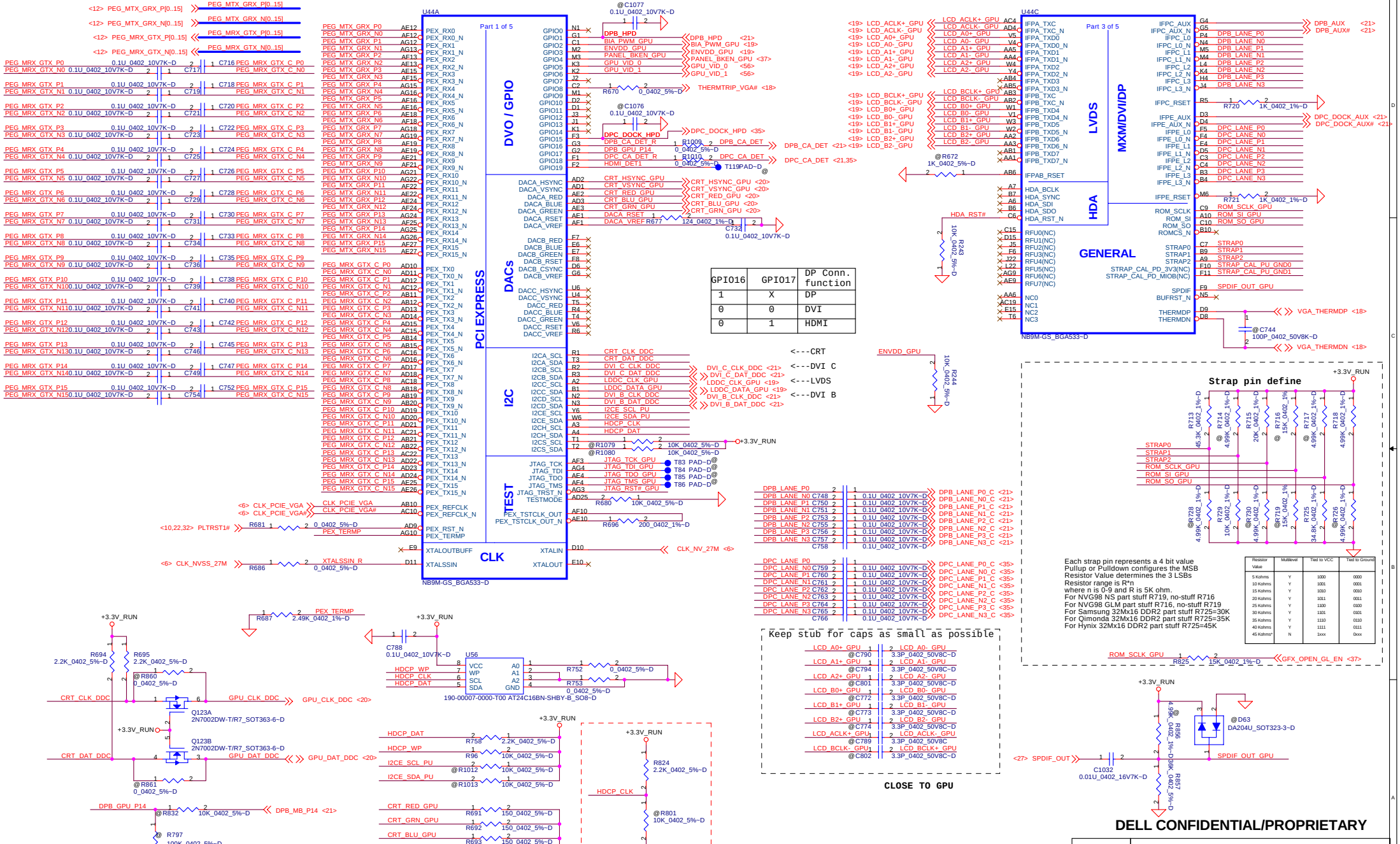

GPIO16	GPIO17	DP Conn. function
1	X	DP
0	0	DVI
0	1	HDMI

Resistor Value	Multilevel	Tied to VCC	Tied to Ground
5 Kohms	Y	1000	0000
10 Kohms	Y	1001	0001
15 Kohms	Y	1010	0010
20 Kohms	Y	1011	0011
25 Kohms	Y	1100	0100
30 Kohms	Y	1101	0101
35 Kohms	Y	1110	0110
40 Kohms	Y	1111	0111
45 Kohms*	N	1xxx	0xxx

DELL CONFIDENTIAL/PROPRIETARY

PROPRIETARY NOTE: THIS SHEET OF ENGINEERING DRAWING AND SPECIFICATIONS CONTAINS CONFIDENTIAL TRADE SECRET AND OTHER PROPRIETARY INFORMATION OF DELL INC. ("DELL") THIS DOCUMENT MAY NOT BE TRANSFERRED OR COPIED WITHOUT THE EXPRESS WRITTEN AUTHORIZATION OF DELL. IN ADDITION, NEITHER THIS SHEET NOR THE INFORMATION IT CONTAINS WAY BE USED BY OR DISCLOSED TO ANY THIRD PARTY WITHOUT DELL'S EXPRESS WRITTEN CONSENT.

Compal Electronics, Inc.

Title: NVG98 PCIE,GPIO,CLK,LVDS

Size: | Document Number: LA-3803P | Rev: 0.8

Date: Thursday, June 12, 2008 | Sheet 50 of 71

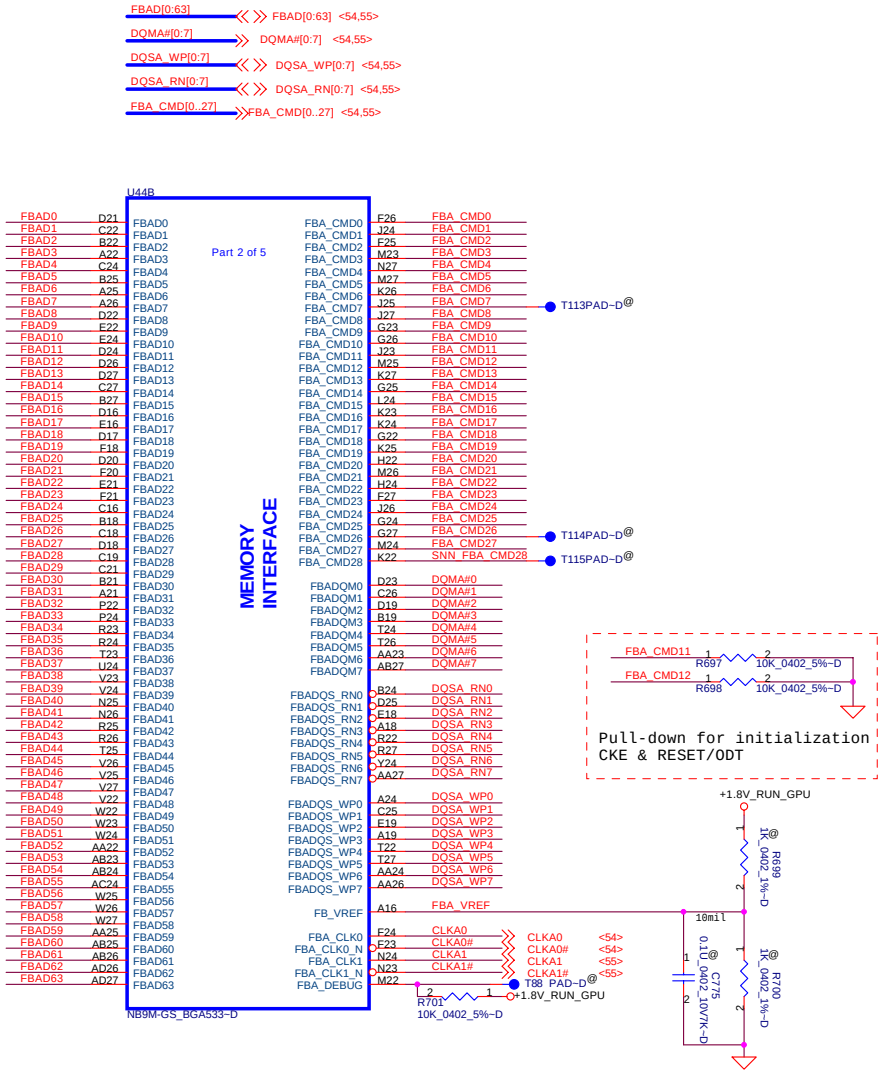

GPU CMD Maping VRAM table

CMD_Address	VRAM	Location
FBA_CMD0	A3	U46,U47
FBA_CMD1	A0	U46..U49
FBA_CMD2	A2	U46,U47
FBA_CMD3	A1	U46..U49
FBA_CMD4	A3	U48,U49
FBA_CMD5	A4	U48,U49
FBA_CMD6	A5	U48,U49
FBA_CMD7		
FBA_CMD8	CS#	U46..U49
FBA_CMD9	WE#	U46..U49
FBA_CMD10	BA0	U46..U49
FBA_CMD11	CKE	U46..U49
FBA_CMD12	ODT	U46..U49
FBA_CMD13	A2	U48,U49
FBA_CMD14	A12	U46..U49
FBA_CMD15	RAS#	U46..U49
FBA_CMD16	A11	U46..U49
FBA_CMD17	A10	U46..U49
FBA_CMD18	BA1	U46..U49
FBA_CMD19	A8	U46..U49
FBA_CMD20	A9	U46..U49
FBA_CMD21	A6	U46..U49
FBA_CMD22	A5	U46,U47
FBA_CMD23	A7	U46..U49
FBA_CMD24	A4	U46,U47
FBA_CMD25	CAS#	U46..U49
FBA_CMD26		
FBA_CMD27	NC#L1	U46..U49
FBA_CMD28		

DELL CONFIDENTIAL/PROPRIETARY

PROPRIETARY NOTE: THIS SHEET OF ENGINEERING DRAWING AND SPECIFICATIONS CONTAINS CONFIDENTIAL TRADE SECRET AND OTHER PROPRIETARY INFORMATION OF DELL INC. ("DELL") THIS DOCUMENT MAY NOT BE TRANSFERRED OR COPIED WITHOUT THE EXPRESS WRITTEN AUTHORIZATION OF DELL. IN ADDITION, NEITHER THIS SHEET NOR THE INFORMATION IT CONTAINS WAY BE USED BY OR DISCLOSED TO ANY THIRD PARTY WITHOUT DELL'S EXPRESS WRITTEN CONSENT.

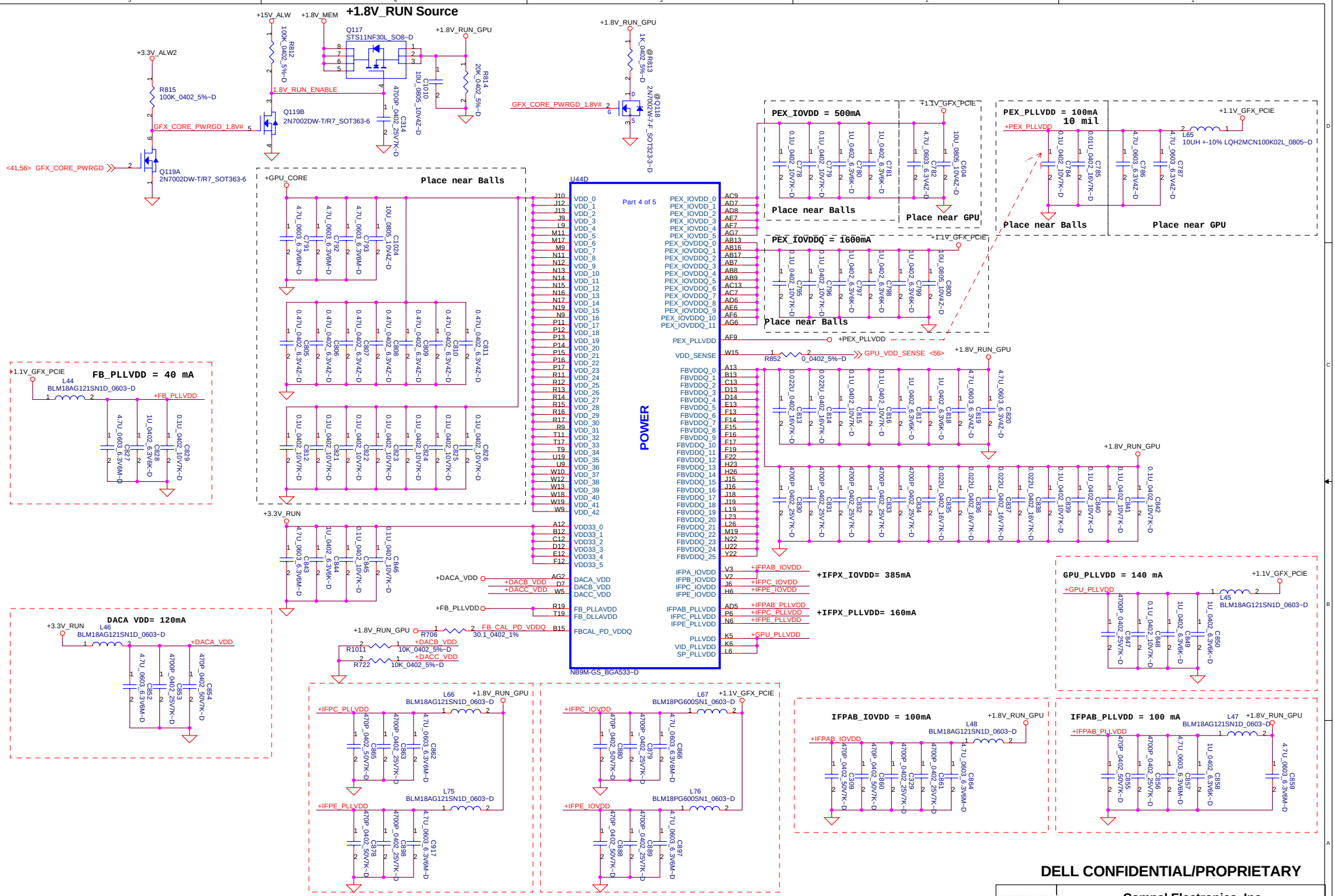

DELL CONFIDENTIAL/PROPRIETARY

PROPRIETARY NOTE: THIS SHEET OF ENGINEERING DRAWING AND SPECIFICATIONS CONTAINS CONFIDENTIAL TRADE SECRET AND OTHER PROPRIETARY INFORMATION OF DELL INC. ("DELL") THIS DOCUMENT MAY NOT BE TRANSFERRED OR COPIED WITHOUT THE EXPRESS WRITTEN AUTHORIZATION OF DELL. IN ADDITION, NEITHER THIS SHEET NOR THE INFORMATION IT CONTAINS WAY BE USED BY OR DISCLOSED TO ANY THIRD PARTY WITHOUT DELL'S EXPRESS WRITTEN CONSENT.

Compal Electronics, Inc.

Title: NVG98 POWER

Size: | Document Number: LA-3803P | Rev: 0.8

Date: Thursday, June 12, 2008 | Sheet 52 of 71

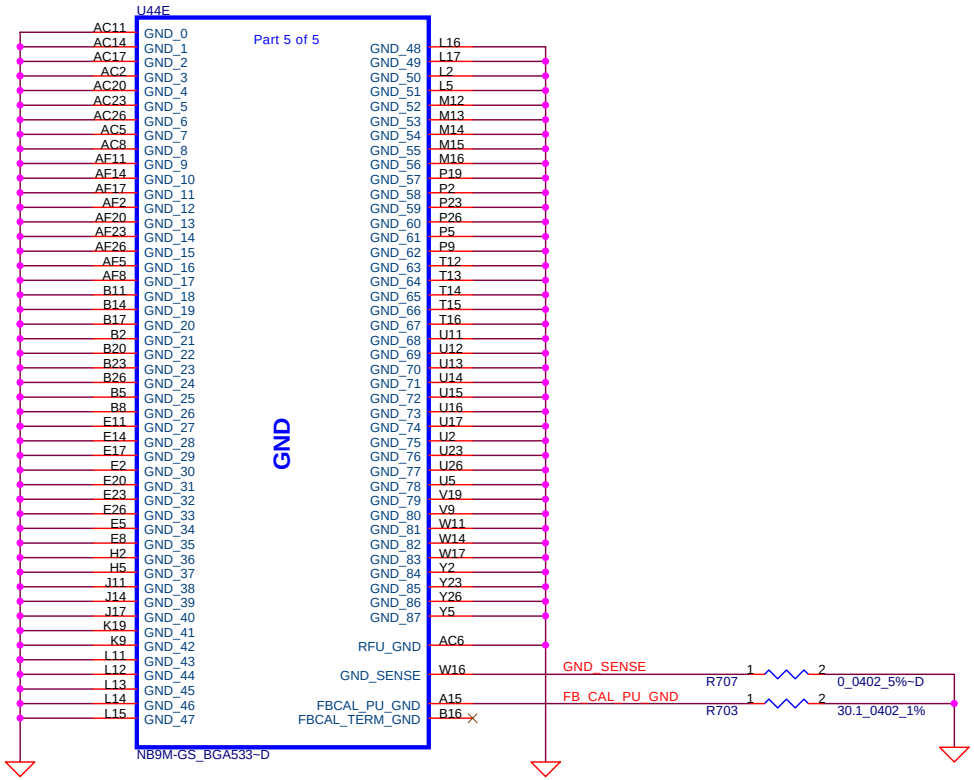

PROPRIETARY NOTE: THIS SHEET OF ENGINEERING DRAWING AND SPECIFICATIONS CONTAINS CONFIDENTIAL TRADE SECRET AND OTHER PROPRIETARY INFORMATION OF DELL INC. ("DELL") THIS DOCUMENT MAY NOT BE TRANSFERRED OR COPIED WITHOUT THE EXPRESS WRITTEN AUTHORIZATION OF DELL. IN ADDITION, NEITHER THIS SHEET NOR THE INFORMATION IT CONTAINS WAY BE USED BY OR DISCLOSED TO ANY THIRD PARTY WITHOUT DELL'S EXPRESS WRITTEN CONSENT.

DELL CONFIDENTIAL/PROPRIETARY

Compal Electronics, Inc.

Title	NVG98 GND
Size	Document Number: LA-3803P
Rev	0.8
Date:	Thursday, June 12, 2008
Sheet	53 of 71

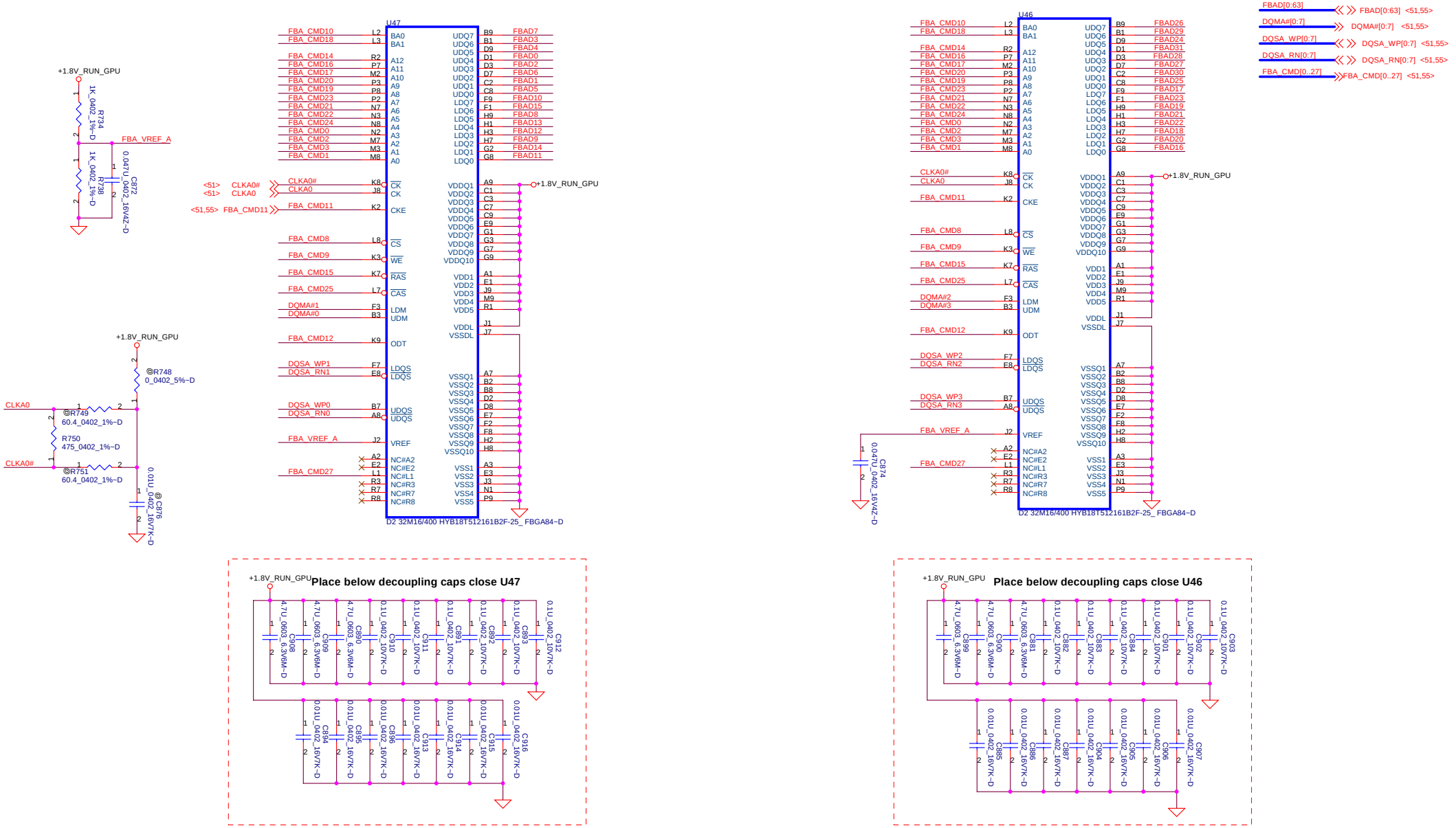

PROPRIETARY NOTE: THIS SHEET OF ENGINEERING DRAWING AND SPECIFICATIONS CONTAINS CONFIDENTIAL TRADE SECRET AND OTHER PROPRIETARY INFORMATION OF DELL INC. ("DELL") THIS DOCUMENT MAY NOT BE TRANSFERRED OR COPIED WITHOUT THE EXPRESS WRITTEN AUTHORIZATION OF DELL. IN ADDITION, NEITHER THIS SHEET NOR THE INFORMATION IT CONTAINS WAY BE USED BY OR DISCLOSED TO ANY THIRD PARTY WITHOUT DELL'S EXPRESS WRITTEN CONSENT.

DELL CONFIDENTIAL/PROPRIETARY

Compal Electronics, Inc.

Title: NVG98 External GDDR2-A

Size: | Document Number: LA-3803P | Rev: 0.8

Date: Thursday, June 12, 2008 | Sheet 54 of 71

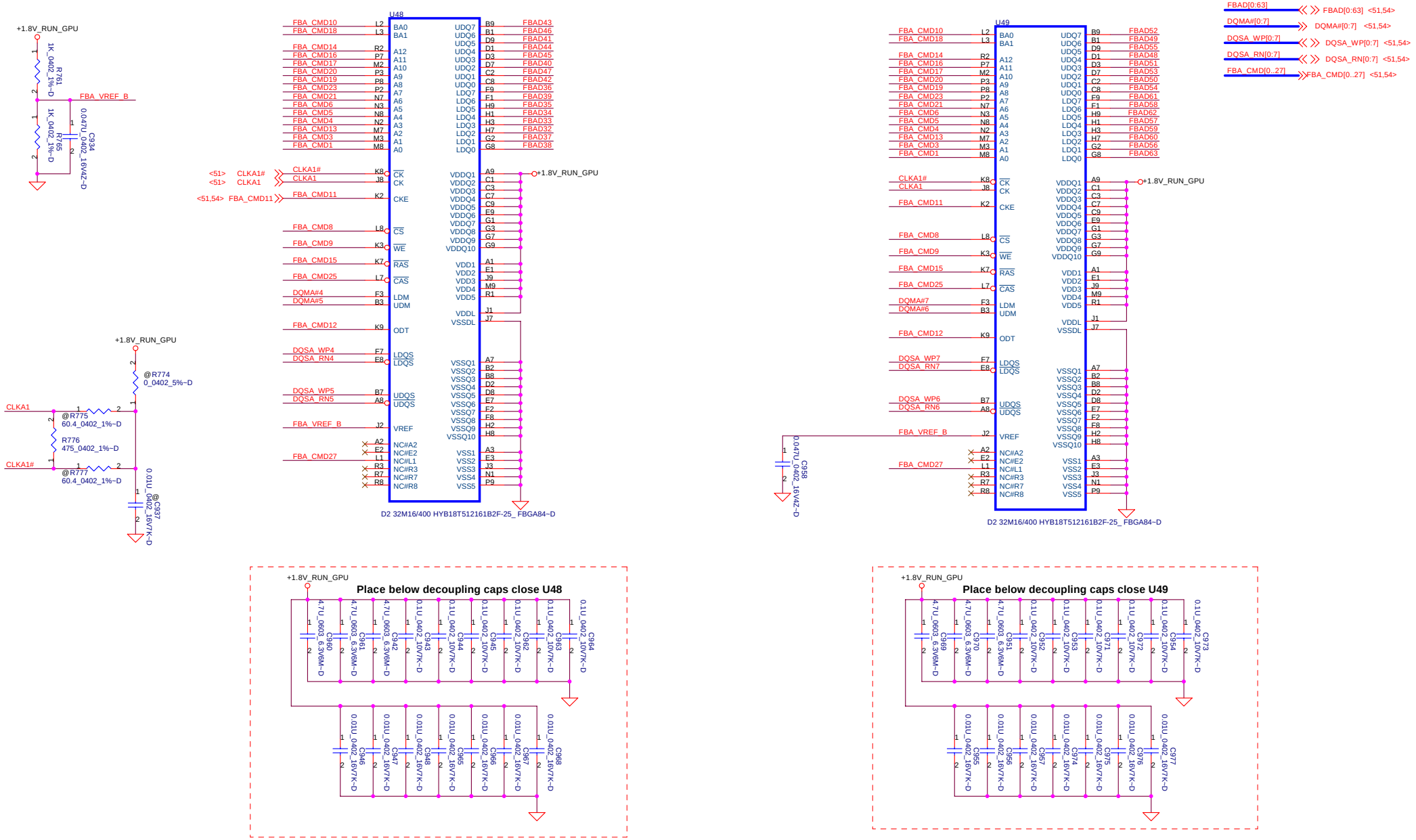

PROPRIETARY NOTE: THIS SHEET OF ENGINEERING DRAWING AND SPECIFICATIONS CONTAINS CONFIDENTIAL TRADE SECRET AND OTHER PROPRIETARY INFORMATION OF DELL INC. ("DELL") THIS DOCUMENT MAY NOT BE TRANSFERRED OR COPIED WITHOUT THE EXPRESS WRITTEN AUTHORIZATION OF DELL. IN ADDITION, NEITHER THIS SHEET NOR THE INFORMATION IT CONTAINS WAY BE USED BY OR DISCLOSED TO ANY THIRD PARTY WITHOUT DELL'S EXPRESS WRITTEN CONSENT.

DELL CONFIDENTIAL/PROPRIETARY

Compal Electronics, Inc.

Title: NVG98 External GDDR2-B

Size: | Document Number: LA-3803P | Rev: 0.8

Date: Thursday, June 12, 2008 | Sheet 55 of 71

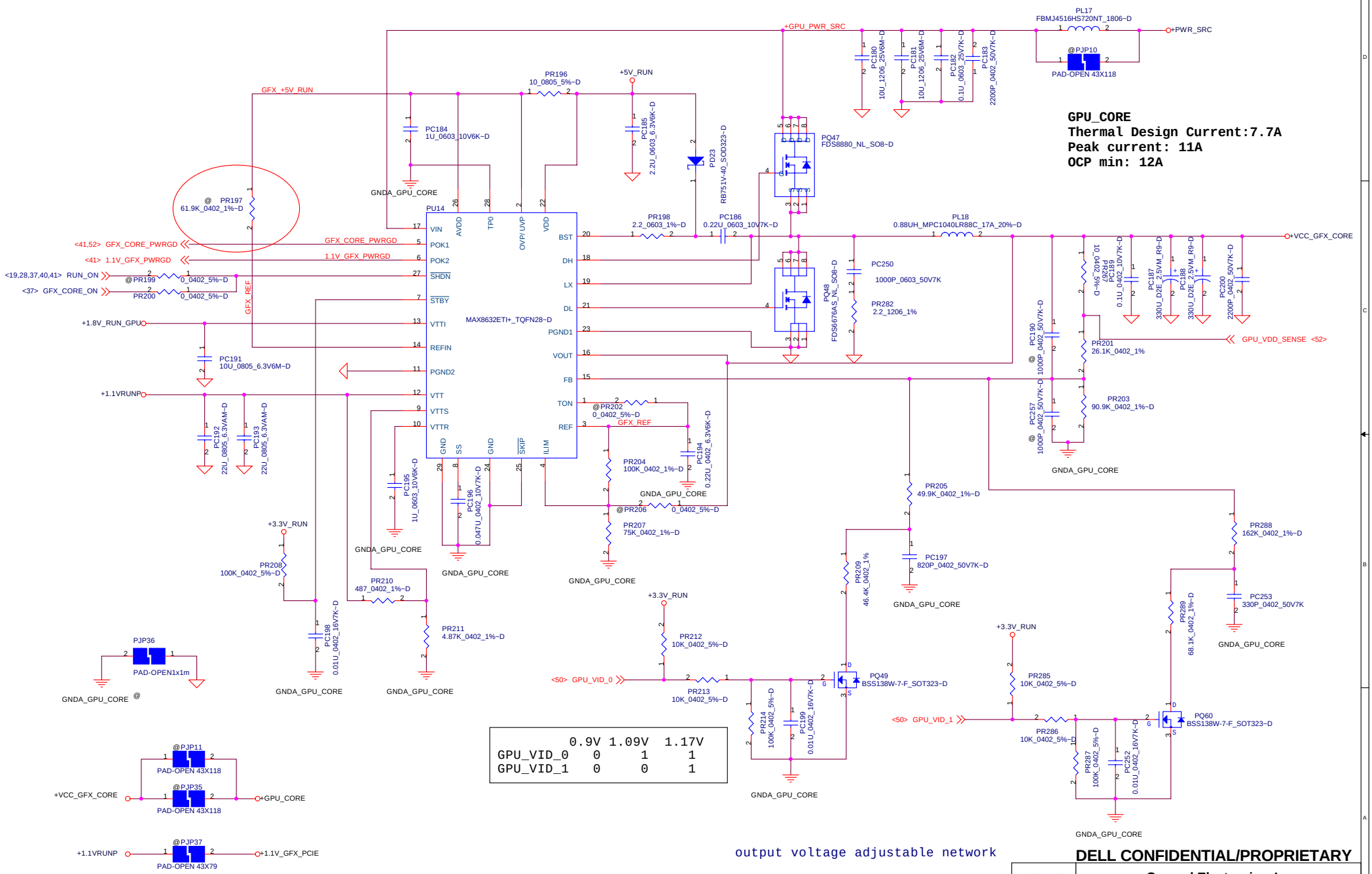

	0.9V	1.09V	1.17V
GPU_VID_0	0	1	1
GPU_VID_1	0	0	1

output voltage adjustable network

PROPRIETARY NOTE: THIS SHEET OF ENGINEERING DRAWING AND SPECIFICATIONS CONTAINS CONFIDENTIAL TRADE SECRET AND OTHER PROPRIETARY INFORMATION OF DELL INC. ("DELL") THIS DOCUMENT MAY NOT BE TRANSFERRED OR COPIED WITHOUT THE EXPRESS WRITTEN AUTHORIZATION OF DELL. IN ADDITION, NEITHER THIS SHEET NOR THE INFORMATION IT CONTAINS WAY BE USED BY OR DISCLOSED TO ANY THIRD PARTY WITHOUT DELL'S EXPRESS WRITTEN CONSENT.

DELL CONFIDENTIAL/PROPRIETARY

Compal Electronics, Inc.

Title: NVG72M VDD_CORE

Size | Document Number: LA-3803P | Rev: 0.8

Date: Thursday, June 12, 2008 | Sheet 56 of 71

Version Change List (P. I. R. List)

Item	Page#	Title	Date	Request Owner	Issue Description	Solution Description	Rev.
1	36	HW	08/14/2007	Compal	Change P/N to 8009CN	Change U33	X01
2	36	HW	08/14/2007	Compal	For vender request	Change R799 from 5 to 0ohm	X01
3	29,10~15	HW	08/14/2007	Compal	Part Number issue	1. Change U23 from 82567LF to 82567LM 2. Change U2 from Teenah to Cantiga	X01
4	36	HW	08/14/2007	Compal	For vender request	1. Change R476 from 2.2K to 510Kohm 2. Change R488 from 1K to 330Kohm	X01
5	36	HW	08/14/2007	Compal	For vender request	Add L77	X01
6	41	HW	08/16/2007	Compal	Fix power sequence issue.	Depop R630, R809	X01
7	21	HW	08/16/2007	DELL	Follow DELL suggection.	Add C1036, C1037, C1038, C1039. Change pop C271~274 from 0.1u cap to 0 ohm resistor.	X01
8	52,53, 54,55	HW	08/16/2007	Compal	Follow Nvidia suggection.	1. Change R706, R703 from 40.2ohm to 30ohm. 2. Change R750, R776 from 121ohm to 240ohm.	X01
9	38	HW	08/16/2007	DELL	Need to add a 100k pull up to RTC_CELL on CELL_CHARGER_DET# at the 5035.	Add a 100k pull up to +RTC_CELL	X01
10	37	HW	08/16/2007	DELL	Follow New GPIO MAPand add DET_PCCRD_EXPSCRD# for Expresscard/Cardbus detection	Add a pull-up and pull-down resistor option(R882, R883) to GPIOE[4] for Expresscard/Cardbus pop option.	X01
11	21	HW	08/16/2007	DELL	Follow DELL request to remove common mode chokes and 0ohm resistor.	Remove L70~L74, R863~R872	X01
12	38	HW	08/16/2007	Compal	U57, U59 power and GND reverse	U57,U59 pin3 contact to GND and pin5 contact to +RTC_CELL	X01
13	6,50	HW	08/16/2007	Compal	CLK_NVSS_27M not link to GPU	Stuff R38,R686	X01
14	46	HW	08/16/2007	Compal	DDR reference voltage no soure	Change V_DDR_MCH_REF to +V_DDR_MCH_REF	X01
15	28	HW	08/16/2007	Compal	BOM option error for use TPA6040 audio amplifier	Stuff C443,C449 and no-stuff R362,R366	X01
16	31	HW	08/20/2007	Compal	For vender request	Change R802 & R803 to 1@,R671 & R739 to 2@	X01
17	24	HW	08/20/2007	Compal	For vender request	Change RP2 from 100K to 10K	X01
18	42	HW	08/20/2007	Compal	For vender request	Change Q98 & Q116 from BSS138W to 2N7002, Q120-Q122 pin 3 pull up from +5V_ALW to +5V_RUN	X01
19	33	HW	08/28/2007	Compal	Follow SMSC request to modify JTAG_RST# control schematic.	Add C1040 and change R579 from 100Kohm to 10Kohm, R585 from 1Kohm to 100ohm and no-stuff.	X02
20	38	HW	08/28/2007	Compal	Follow USB Switch Specification and change the supply volatge from +5V to +3.3V.	Change U54 pin 8 from +5V_CHGUSB to +3.3V_SUS	X02
21	29	HW	08/28/2007	Compal	LPC address conflict DOCK side SIO LPC47N237	Reserve 4.7K pull-down of R884 on U24 pin9 for select LPC address of 4E/4F or 2E/2F.	X02
22	18	HW	08/30/2007	Compal	Avoid +RTC_CELL drop to 2.5V and +3.3V_SUS have leakage issue	U3 pin 21 add R887 0 ohm, U3 pin 22-24 reserved pull up R885, R886 & R888 to +RTC_CELL	X02
23	29, 36	HW	08/30/2007	Compal	Use JTAG to debug USH request	U32 pin B5, B4 add @R894, pin P10, R11, N10, R12, P11 & M9 add @R895-@R897, pin M9 add R899 0ohm pull down resistor	X02
24	31	HW	08/30/2007	Compal	Schematic issue	VCC3EN# connect to U27 pin2, VCC5EN# connect to U27 pin 1	X02
25	38	HW	08/30/2007	Compal	Follow SMSC request	Add R900 100K ohm pull high to +RTC_CELL	X02
26	36	HW	08/30/2007	Compal	For JTAG debug purpose	SBOOT reserved R898 pull down to GND	X02
27	29	HW	08/30/2007	Compal	Add pop options for China TPM for request from DELL issue item SCH161931	U24 pin 28 C_TPM_LPC_EN add R892 pull down 4.7K ohm to GND, and add @R893 to EC & USH	X02
28	29	HW	08/30/2007	Compal	AUD_EAPD is high event not low event.	Change signal name from AUD_EAPD# to AUD_EAPD	X02
29	31	HW	08/30/2007	Compal	REXT of R5C847 pinB14 pull-down not follow spec	Change R417 from 10K_5% to 10K_1%	X02
30	10	HW	08/30/2007	Compal	Add test point for test	Add test point in U2 RSVD1-RSVD25.	X02
31	37	HW	08/30/2007	Compal	Change Board ID to X02	Pop R530, R534, de-pop R529, R535	X02
32	35	HW	08/31/2007	Compal	Change E-Dock connector location	Change from JP1 to JDOCK1	X02
33	22,24	HW	09/01/2007	Compal	Follow DELL issue item SCH162009	Change R817, R212 from 8.2K ohm to 100K ohm, R823 from 10K ohm to 100K ohm	X02

PROPRIETARY NOTE: THIS SHEET OF ENGINEERING DRAWING AND SPECIFICATIONS CONTAINS CONFIDENTIAL TRADE SECRET AND OTHER PROPRIETARY INFORMATION OF DELL INC. ("DELL") THIS DOCUMENT MAY NOT BE TRANSFERRED OR COPIED WITHOUT THE EXPRESS WRITTEN AUTHORIZATION OF DELL. IN ADDITION, NEITHER THIS SHEET NOR THE INFORMATION IT CONTAINS WAY BE USED BY OR DISCLOSED TO ANY THIRD PARTY WITHOUT DELL'S EXPRESS WRITTEN CONSENT.

Version Change List (P. I. R. List)

Item	Page#	Title	Date	Request Owner	Issue Description	Solution Description	Rev.
34	36	HW	09/01/2007	Compal	Follow DELL issue item SCH162011 Remove Contactless Smart Cart resistors and traces to the Touch Pad Connector	Remove R858, R875, R876, R859	X02
35	36	HW	09/01/2007	Compal	For vender request	Remove R735 De-pop R555, R848, R20 and add @R831, R855 0 ohm	X02
36	36	HW	09/01/2007	Compal	For vender request	Remove L77	X02
37	27	HW	09/01/2007	Compal	For vender request	De-pop R334, R335	X02
38	24	HW	09/01/2007	Compal	For vender request	R293 change to 10k ohm	X02
39	23	HW	09/01/2007	DELL	Follow EE WORK ITEM SCH162092 correct RTC PAID	Add R905,906,907,908,Q96 and cheage the pull up power rail from +3.3V_RUN to +3.3V_ALW_ICH for RTC_BAT_DET#	X02
40	36,39	HW	09/01/2007	DELL	Follow DELL issue item TASK162008	Remove "CONTACTLESS_DET" from JTP1 pin 20 and connect to JCS1 pin6 ,add pull-up resistor R910 100Kohm to +3.3V_ALW.	X02
41	21	HW	09/01/2007	DELL	Follow DELL issue item SCH162035	1. Stuff C271,C272 C273,C274 with .1 uF. 2. Change C1036, C1037, C1038, and C1039 to 0 ohm of R901~904	X02
42	38	HW	09/01/2007	DELL	Follow DELL issue item SCH162105 Fix ACAV_IN_DOCK# for battery discharge issue	1.Change DOCK_DET# pull-up from +3.3V_ALW to +RTC_CELL 2.Change ACAV_IN_DOCK# pull-up from +DC_IN to +3.3V_ALW2	X02
43	7	HW	09/01/2007	Intel	Follow Debug port design guide for Santa Rosa and Montevina Platforms_Rev0.95 for ITP700Flex debug port	Change ITP_TDO,ITP_TMS,ITP_TDI,ITP_TRST#,ITP_TCK of R62,R64,R65,R66,R67 pull-up from 56 to 51ohm and add ITP_BPM#5 of R912 pull-up 51ohm to +1.05V_VCCP. Change H_RESET# serial resistor to 1K ohm	X02
44	35	HW	09/01/2007	DELL	Follow DELL issue item SCH161983 Fix Slice detect circuit	a). Short jdock1 pin 141 to pin 143. b). Keep the net name SLICE_BAT_PRES# c). Remove the connection to EC5028 pin 28.	X02
45	38	HW	09/01/2007	DELL	For DELL request	HOST_DEBUG_TX Add R911 100K ohm pull up to +3.3V_ALW	X02
46	42	HW	09/01/2007	Compal	Correct net name for sniffer blue led.	Correct net name from SNIFFER_GREEN# to SNIFFER_BLUE#	X02
47	37	HW	09/01/2007	Compal	Correct VGA_IDENTIFY	Correct VGA_IDENTIFY from pull low for UMA to Pull high to +3.3V_ALW for DIS.	X02
48	42	HW	09/03/2007	Compal	For vender request	Change D43 pin2 net name from R_WPAN_LED to WPAN_LED	X02
49	35	HW	09/03/2007	Compal	For vender request	C1033 & C1034 change to 0603 25V	X02
50	36	HW	09/04/2007	Compal	Change net name	Change net name from SC_DET# to SC_DET JSC1 pin1 add R913 4.7K ohm	X02
51	22,24	HW	09/04/2007	Compal	Add test point	GNT2#/GPIO53, SUS_STAT#/LPCPD#,	X02
52	29	HW	09/04/2007	Compal	BOM control add 4@ for China TPM	Change C484-C486, R381, R383, R893, U24, R892 to 4@	X02
53	31,36	HW	09/04/2007	Compal	Add test point	UDIO1, UDIO2, UDIO5, RI_OUT#/PME#, FIL0, MDIO1,MDIO2, MDIO5,MDIO6, MDIO18, MDIO19, SC_FCB_ENB	X02
54	18	HW	09/05/2007	Compal	Solved +3.3V_SUS backdrive issue.	Reserved R914 0ohm 0603 resister and connect to +3.3_ALW	X02
55	31	HW	09/05/2007	Compal	Fix 1394 can't detec issue	Change J1394 from 5 pin to 6 pin and connect pin 1 to GND	X02
56	29	HW	09/05/2007	Compal	Follow CRB to reserved pull up and pull down reisitor for JTAG	Reserved R890,R916,R915 200ohm to +3.3V_LAN, R891 1Kohm to GND and R889 0ohm to GND	X02
57	27	HW	09/05/2007	Compal	Correct net name	Correct net name from DAI_BCLK, DAI_LRCK, DAI_DO, DAI_12MHZ, I2S_DI to DAI_BCLK#, DAI_LRCK#, DAI_DO#, DAI_12MHZ#, I2S_DI# and update U17 symbol.	X02
58	21	HW	09/06/2007	Compal	Follow DELL issue item SCH161967 System DP off circuit.	Add U62, @R917, @R918,R919,C0141, and change R189 from pull down to pull up +3.3V_RUN, connect DP_MUX_PD# from U9 pin30 to U62 pin 1 and change DP_MUX_PD# net name to DP_MB_EN, connect DP_MB_HPD from U9 pin 40 to U62 pin2, connect U62 pin 4 to U9 pin 40	X02
59	42	HW	09/06/2007	Compal	For vender request	change R57 from 22.6ohm to 1Kohm.	X02
60	26	HW	09/06/2007	Compal	Schematic issue.	change C380 and C381 from 3900pF to 0.01UF.	X02

DELL CONFIDENTIAL/PROPRIETARY

PROPRIETARY NOTE: THIS SHEET OF ENGINEERING DRAWING AND SPECIFICATIONS CONTAINS CONFIDENTIAL TRADE SECRET AND OTHER PROPRIETARY INFORMATION OF DELL INC. ("DELL") THIS DOCUMENT MAY NOT BE TRANSFERRED OR COPIED WITHOUT THE EXPRESS WRITTEN AUTHORIZATION OF DELL. IN ADDITION, NEITHER THIS SHEET NOR THE INFORMATION IT CONTAINS WAY BE USED BY OR DISCLOSED TO ANY THIRD PARTY WITHOUT DELL'S EXPRESS WRITTEN CONSENT.

Version Change List (P. I. R. List)

Item	Page#	Title	Date	Request Owner	Issue Description	Solution Description	Rev.
61	37	HW	09/06/2007	DELL	For customer request	Change @R788 pull up from +3.3V_ALW to +3.3V_RUN	X02
62	18	HW	09/06/2007	Compal	Add net name	Add net name for +RTC_CELL U3 pin21	X02
63	28	HW	09/06/2007	Compal	Schematic issue	Stuff R368 and no-stuff R367	X02
64	29	HW	09/06/2007	DELL	Disable USH TPM & enable China TPM	Stuff R841,R474,R892,R893 and no-stuff r483,R464,R466,R788,R750,R723,R724,R732,R733	X02
65	36,37	HW	09/06/2007	Compal	For vender request	Change @R464, @R466, R705, R723, R724, R732, R733 to 5@, SP_TPM_LPC_EN add pull down R920 10K ohm, pop R841	X02
65	24,33 37,38 39,40 41	HW	09/08/2007	DELL	Follow M09 GPIO Map_0907	1. Change MEC5035 pin43(GPIO52) from SIO_EC_SCI2# to SIO_EXT_SCI# and contact to ICH9M pinC12(GPIO12) and pinAG19(GPIO1) 2. Remove MEC5035 pin66(GPIO100/nEC_SCI) off-page 3. Change ICH9M pinAH21(GPIO6) form SIO_EC_SCI2# to TPM_ID and add pull-down of R922 for China TPM(4@), stuff R273 for USH TPM(5@) and change to 100K 4. Change ICH9M pinC21(GPIO13) from ENERGY_DET# to CONTACTLESS_DET# and change R822 from 20K to 100K.Remove ECE1088 pin10 and R910. 5. Change CELL_CHARGER_DET# from MEC5035 pin126(VCI_IN1#) to ECE5028 pin78(GPIOB6) 6. Rename MEC5035 pin126(VCI_IN1#) from CELL_CHARGER_DET# to EN_CELL_CHARGER_DET# and contact to U53 pin3,4 7. Rename USB_CHARGER_PWR_EN# to ESATA_USB_PWR_EN# and contact to U29 pin3,4 and add pull-up 100K of R923 to +3.3V_ALW 8. Remove ECE5028 pin82 off-page for DELL_ESATA_PWR_EN# 9. Change MEC5035 pin42(GPIO051) from 3.3V_SUS_ON to SUS_ON and remove pin34(GPIO041) from SUS_ON to NC 10. Remove MEC5035 pin118(BGPO0) to NC	X02
66	27,37	HW	09/08/2007	Compal	Rename net name	1. Rename DOCK_MIC_DET# to DOCK_MIC_DET 2. Rename DOCK_HP_DET# to DOCK_HP_DET	X02
67	50	HW	09/10/2007	Compal	For DELL EE work item: SCH162359	Change R825 from 45.3K_1% to 15K_1%	X02
68	24	HW	09/10/2007	Compal	Change SPI ROM P/N	Change U12,U13 to SA00001OZ0L	X02
69	33,37,38	HW	09/11/2007	DELL	ESATA USB charger control signal issue	1. Add serial resitor of R928 for CELL_CHARGER_DET# and R927,C1042 for EN_CELL_CHARGER_DET# and wire-and contact to JESA1 pin16. 2. Change U29 pin3,4 from ESATA_USB_PWR_EN# to DELL_ESATA_PWR_EN# 3. Change U53 pin3,4 from N_CELL_CHARGER_DET# to ESATA_USB_PWR_EN#	X02
70	24	HW	09/11/2007	DELL	Follow DELL request	Remove SIO_EXT_SCI# on ICH9M pinC12(GPIO12) and U36 pin43(GPIO052) and contact from ICH9M pinAG19(GPIO1) to U36 pin66(GPIO100)	X02
71	10,16 17,18	HW	09/11/2007	DELL	Follow DELL request for PM_EXTTS#	Add serial resistor of R926 from U3 pin13 contact to U2 pinN33,P32 and remove trace of PM_EXTTS#[0,1] contact to DIMM	X02
72	23,24	HW	09/11/2007	Compal	Aviod leakage issue	1. Change SIO_EXT_SCI# pull-up from +3.3V_ALW_ICH to +3.3V_RUN 2. Change TPM_ID pull-up from +3.3V_ALW_ICH to +3.3V_RUN 3. Change SNIFFER_DET# pull-up from +3.3V_ALW_ICH to +3.3V_RUN 4. Change IO_LOOP from +3.3V_RUN to +3.3V_ALW_ICH 5. Change RTC_BAT_DET# from +3.3V_ALW_ICH to +3.3V_RUN	X02
73	37	HW	09/11/2007	Compal	Add pull-up resistor for DELL_ESATA_PWR_EN# initial	Add pull-up resistor of R929 to pull-up +3.3V_ALW	X02
74	36	HW	09/11/2007	Broadcom	Follow vendor request for use smard card controller of 73S8009CN	1. Contact of GPIO14_TER_ON/OFF from U33 pin24 to U32 pinC4 2. Contact AUX1UC from U33 pin2 to U32 pinJ14 3. Contact AUX2UC from U33 pin3 to U32 pinJ15 4. Stuff R768,R769,R490 5. Change netname from GPIO1_TER_ON/OFF to UART_TX/GPIO1	X02

DELL CONFIDENTIAL/PROPRIETARY

PROPRIETARY NOTE: THIS SHEET OF ENGINEERING DRAWING AND SPECIFICATIONS CONTAINS CONFIDENTIAL TRADE SECRET AND OTHER PROPRIETARY INFORMATION OF DELL INC. ("DELL") THIS DOCUMENT MAY NOT BE TRANSFERRED OR COPIED WITHOUT THE EXPRESS WRITTEN AUTHORIZATION OF DELL. IN ADDITION, NEITHER THIS SHEET NOR THE INFORMATION IT CONTAINS WAY BE USED BY OR DISCLOSED TO ANY THIRD PARTY WITHOUT DELL'S EXPRESS WRITTEN CONSENT.

Version Change List (P. I. R. List)

Item	Page#	Title	Date	Request Owner	Issue Description	Solution Description	Rev.
75	39	HW	09/11/2007	Compal	ECE1088 & JCS1 de-pop option	De-pop U38, C676, C677, R650, R826, JCS1	X02
76	18	HW	09/11/2007	Compal	Change EMC4002 part number	From SA00001PYL for rev.B to SA00001PY1L for rev.C	X02
77	10,27	HW	09/11/2007	Compal	For vender request	change @R685 from 33 ohm to 0 ohm, R85 de-pop, @R330 from 0 ohm to 10K ohm	X02
78	7	HW	09/13/2007	Compal	For vender request	Un stuff R912.	X03
79	38	HW	09/13/2007	Compal	For vender request	R574 change from 1Mohm to 100Kohm.	X03
80	7	HW	09/13/2007	Compal	For vender request	Change ITP_TDO,ITP_TMS,ITP_TDI,ITP_TRST#,ITP_TCK of R62,R64,R65,R66,R67 pull-up from 51 to 56ohm.	X03
81	19	HW	09/13/2007	Compal	Fix schematic Issue.	Correct C242 power rating from 16V to 25V.	X03
82	24	ICH9M	09/14/2007	Dell	SCH162577: Populate pull-down on ICH_LAN_RST#	Populate R276, No Pop R271	X03
83	29	ICH9M	09/14/2007	Dell	SCH161941: USH and China TPM Pop Options	Chane the text in the table to show that it R892 is connect to pin China TPM pin 28	X03
84	29	ICH9M	09/14/2007	Dell	SCH162277: GPIO for China TPM vs. USH TPM	Follow the new GPIO map to implement China TPM ID strap	X03
85	36	USH	09/14/2007	Dell	Follow TPM Option Table on page 29.	Depop R466	X03
86	38	EC	09/19/2007	Dell	SCH162762: No Stuff U37 - Flash ROM on the EC	Depop U37, C672, R589, R590, R591, R592, R593	X03
87	23	ICH	09/19/2007	Dell	SCH162766: Need to change the value of R908	Changed the value of R908 to 1 k ohm	X03
88	21, 38	ICH	09/19/2007	Dell	SCH162800: Check U57 and U62 for packages	SOT353 and SC70 footprint are the same package	X03
89	24,29,37	ICH/LOM	10/09/2007 Updated	Dell	SCH162826: Connect the ICH9 GPIO12 to the Intel LOM LAN_DISABLE_N	Removed U58. Added R1008.	X03
90	34	MiniCard	09/19/2007	Dell	SCH162827: No pop the 0 Ohm resistors that connect the USB and PCIE mini-card detects	No pop R740, R741, and R742	X03
91	10	MCH	09/19/2007	Dell	SCH162822: Remove one of the two pull-ups on PM_EXTTS#	Removed R85 and changed netname from PM_EXTTS#0/#1 to PM_EXTTS#	X03
92	19,37	LVDS/5028	09/27/2007	Dell	SCH162824: Add load switch for the camera power	Removed D4 and Added C1043, C1044, Q132, Q133, R995. Use GPIOB4 on the 5028 for CCD_OFF .	X03
93	21	DP	09/27/2007	Dell	SCH162926: Need to add 100k pull down to DPC_CA_DE	Added R996	X03
94	35	Docking	09/29/2007	Compal	SCH163185: Add ESD discharge parts for the Dock Power pins	Added D64, D65 (Nostuff)	X03
95	28	Amplifier	09/29/2007	Dell	SCH162939: C434 and C435 can be reduced to 0805	Changed C434, C435 size to 0805	X03
96	18	Guardian	10/09/2007 Updated	Dell	SCH162823: Connect PWR_MON_GFX to VIN1 on the EMC4002 - Depop the UL circuit	Added R997(@), R998 on page 18. PR170 stuff.	X03
97	37	SIO	10/01/2007	Dell	Change BID to X00 (011)	Changed R529 stuff. R534 nostuff.	X03
98	36	USH	10/02/2007	Dell	SCH163294: USH strapping option resitor missing in Roush	Changed R479 pull-up and R478 pull-down.	X03
99	24,34	Minicard	10/03/2007	Dell	SCH163380: Populate the PCIE MCARD Detect 100k pull-ups, and move R266 to page 34	Populate:R439, R449 (Change from 8.2k to 100k), R458. Move R266 from page 24 to page 34	X03
100	37,42	LED	10/09/2007 Updated	Dell	SCH161770: LED Circuit Changes	Added:R999~R1006. Q136, Q137. Q139~Q145, U65. Removed: D44, D60, D62.	X03
101	35	Docking	10/04/2007	Compal	SCH163409: Populate D64 and D65 (ESD Diodes on +DOCK_PWR_BAR)	D64, D65 changed to stuff.	X03
102	6	Clock	10/04/2007	Dell	SCH163426: Wrong series termination on CLK_NV_27M	R37 needs to change to 33 ohm	X03
103	5,38	EC	10/05/2007	Dell	SCH163535: DOCK_SMB_CLK and DOCK_SMB_DAT pulled up resistor to +3.3V_ALW	Change R565 and R567 from +5V_ALW to +3.3V_ALW	X03
104	20	Video	10/05/2007	Compal	SCH163503: Nostuff ESD Diodes	Nostuff ESD Diodes D5, D6, D7	X03
105	33, 37	EC	10/05/2007	Dell	SCH163465: Change Netname following 1003 GPIO Map	Rename GPIOB2 pin 82 from DELL_ESATA_PWR_EN# to USB_CHARGER_PWR_EN# for clarification	X03

DELL CONFIDENTIAL/PROPRIETARY

PROPRIETARY NOTE: THIS SHEET OF ENGINEERING DRAWING AND SPECIFICATIONS CONTAINS CONFIDENTIAL TRADE SECRET AND OTHER PROPRIETARY INFORMATION OF DELL INC. ("DELL") THIS DOCUMENT MAY NOT BE TRANSFERRED OR COPIED WITHOUT THE EXPRESS WRITTEN AUTHORIZATION OF DELL. IN ADDITION, NEITHER THIS SHEET NOR THE INFORMATION IT CONTAINS WAY BE USED BY OR DISCLOSED TO ANY THIRD PARTY WITHOUT DELL'S EXPRESS WRITTEN CONSENT.

Version Change List (P. I. R. List)

Item	Page#	Title	Date	Request Owner	Issue Description	Solution Description	Rev.
106	52,53,54	GFX	10/05/2007	Dell	SCH163430: NVidia Feedback: Change FBCAL resistors and CLK Shunt Resistor	R703, R706 set to 30.1 Ohm 1% . R750 set to 475 Ohm 1% .	X03
107	24,37	ICH,SIO	10/09/2007	Dell	SCH163524: Need to change SNIFFER_DET# connection	Disconnect SNIFFER_DET# from ICH pin AE18 and connect it to EC5028 pin 33. Rename, SNIFFER_DET# to PWR_BTN_BD_DET#	X03
108	36	USH	10/11/2007	Compal	SCH163437: Teridian Feedback: Make sure Inductor has max rated current 400mA on pin 27	L69 change to use 10uH with maximun 400mA rated current.	X03
109	33	USB	10/26/2007 Updated	Compal	SCH163706: Charge USB Circuit Update	1. JESA1 pin1 change to +5V_ESATA and pin5 change to +5V_CHGUSB 2. JESA1 pin2,3 change to USBP3_D-,USBP3_D+ and pin6,7 change to USBP2_D-_SW, USBP2_D+_SW	X03
110	38	EC	10/17/2007	Compal	SCH163795: Follow M09 GPIO_100307 MAP to modify scheamtic	1.Add R85,C918 for RC_ID 2.Remove DEBUG_ENABLE# and connect HOST_DEBUG_RX from U36 pin71 to R577 pin2 3.Remove ADAPT_TRIP_SET on U35 pin70 and PR169 Pin1	X03
111	50	GFX	10/25/2007	Dell	SCH163765: Need to add two series zero ohm pop options for CA_DET	Added R1009, R1010 nostuff.	X03
112	23, 29, 36, 38	ICH, LOM, USH,EC	10/30/2007	Compal	SCH164316: Crystal CL Capacitor Changes (Discrete Only)	1. C297, C475, C476, C608 changed to 12pF 2. C609 changed to 15pF 3. C515 changed to 22pF 4. C514, C675 changed to 27pF	X03
113	38	EC	10/30/2007	Dell	SCH163795: Follow M09 GPIO_100307 MAP to modify scheamtic	1. Changed MEC5035 pin30 to SUSPWROK (Host RX is used) R553 del 2. Changed MEC5035 pin19 from SUSPWROK to RC_ID 3. RSVD Pin 70 GPIOC5 / ACK# ADAPT_TRIP_SEL 4. RSVD Pin 71 GPIOC6 / ERROR# ITP_DBRESET#(RSVD) / LCD_TST	X03
114	37	SIO	10/31/2007	Dell	SCH164408: GPIO Map Update (1025)	1. Added MDC_RST_DIS# to GPIOE5/DTR# (Del R489, R830) 2. Changed pin 82 from USB_CHARGER_PWR_EN# to ESATA_USB_PWR_EN# 3. Change pin 104 from ESATA_USB_PWR_EN# to USB_POWERSHARE_PWR_EN#	X03
115	28	Amplifier	11/01/2007	Dell	SCH164416: Line out and Line In THD+N Failures reqire cap changes	Changes need to be made to the Line Out series Capacitors C436 & C437 from 1uF 1206 to 2.2uF 1206	X03
116	20,50,52	GFX	11/01/2007	Dell	SCH164532: Remove options for TV on Discrete	1. Removed R669, R762, R763.Make pins 7B1, 8B1, 9B1, 7B2, 8B2, and 9B2 NC at U4 2. Disconneced DAC port B as NC at U44(Pin F7, E6, E7, F8, D6, G6) Removed C869, C868, C867, L49, R679, C737,R688,R689,R690. 3. Pull down DACB_VDD (pin D7) thru 10K ohm. Added R1011.	X03
117	18,41	Thremal	11/01/2007	Dell	SCH162207: Issue to track the power rail for the EMC4002	Follow Maybach circuit.	X03
118	50	GFX	11/05/2007	NV	SCH163991: Reserve 10K pull-down on NV9M I2CE SMbus from Nvidia FAE request	Added R1012, R1013.	X03
119	33	USB	11/06/2007	Compal	SCH164452: USB Switch Footprint Changed for Multiple Sources Support	Added C1045. Changed U54 footprint.	X03
120	23,50	ICH9M,GFX	11/06/2007	Dell	TASK162887: Add level shifter from 3.3V to 1.5V for MCH HDA	Stuff R673, R674, R675, R6767, R678 and R243~R246. R673,R674,R676, R678 cnahged value from 33 ohm to 0 ohm because R243~R246 stuff .	X03
121	37	SIO	11/07/2007	Dell	SCH164730: MDC_RST Connection Changed per GPIO Map (1105)	ECE5028 Moved MDC_RST from pin 84 GPIOE5/DTR# to Pin 102 GPIOA5	X03
122	50	GFX	11/07/2007	Dell	SCH164740: Roush/Heelys: discrete graphics 3 voltages setting	GPIO6 is connected to GPU_VID_0, and GPIO5 is connected to GPU_VID_1.	X03
123	18	Thremal	11/07/2007	Dell	TASK162399: Need to contact SMSC about Guardian errata	Changed R142 from 22 to 0 Ohm.	X03
124	35	Docking	11/08/2007	Dell	SCH164795: Docking Pin Out Change to Support Battery Slice	Assign Pin 41 of the docking connector for NBDOCK_DC_IN_SS	X03
125	42	LED	11/08/2007	Dell	SCH164770: Change CAP/NUM/SCRL LEDs to +5V_ALW	Change the 3x LED power rail to +5V_ALW instead of +5V_RUN	X03

DELL CONFIDENTIAL/PROPRIETARY

PROPRIETARY NOTE: THIS SHEET OF ENGINEERING DRAWING AND SPECIFICATIONS CONTAINS CONFIDENTIAL TRADE SECRET AND OTHER PROPRIETARY INFORMATION OF DELL INC. ("DELL") THIS DOCUMENT MAY NOT BE TRANSFERRED OR COPIED WITHOUT THE EXPRESS WRITTEN AUTHORIZATION OF DELL. IN ADDITION, NEITHER THIS SHEET NOR THE INFORMATION IT CONTAINS WAY BE USED BY OR DISCLOSED TO ANY THIRD PARTY WITHOUT DELL'S EXPRESS WRITTEN CONSENT.

Version Change List (P. I. R. List)

Item	Page#	Title	Date	Request Owner	Issue Description	Solution Description	Rev.
126	30	LAN	11/09/2007	Compal	SCH164581: Remove termination resistor and capacitor for LAN_TX[0..3]+/-	Removed MDI termination R384~R391,C488~C491	X03
127	12,13	GMCH	11/09/2007	Dell	SCH164856: Remove options for TV form Cantiga	1.VCCD_TVDAC --> connect to GND 2.VCCD_QDAC --> connect to 1.5V with filter 3.TV_DCONSEL_0, TV_DCONSEL_1 --> left as NC	X03
128	18	4002	11/12/2007	Dell	SCH164877: EMC4002 POWER_SW# Input - Add AND Gate	Added U68, R1014, R1015, C1050	X03
129	38	EC	11/12/2007	Dell	SCH164893: Remove U37 (SPI ROM on EC)	Removed U37, R558, R589~R593, C672	X03
130	6,36	CLOCK,USH	11/12/2007	Dell	SCH164896: PCI Clock BOM Options for ROW vs. China TPM	Change R29 from 22 Ohm to 33 Ohm 5@ (ROW TPM PCI Clock) Change R854 from 22 Ohm to 33 Ohm 4@ (China TPM PCI Clock) Add R1016 (100k) pull-down 4@ on U32 pin M7	X03
131	50	GFX	11/12/2007	Dell	SCH164899: Roush Discrete Pop Options	Populate R825. No Pop R719	X03
132	29,33,35	LOM,Docking	11/12/2007	Dell	SCH164888: Add Intel LOM LDO for 2.65V/2.5V	1. Add Q50, Q146, R1017~R1020 2. Remove R377, R380, Q46	X03
133	21	DP	11/12/2007	Dell	SCH164892: Discrete Graphics changes for DP	1. No pop 100Kohm pull ups R180 2. Add 100Kohm PD on DPB_AUX_SW and DPB_AUX#SW.R1022, R1023(@). 3. Add 100kohm PD on DPB_MB_AUX and DPB_MB_AUX#.R1024(@),R1025(@). 4. Remove Q10, R798. Connect U9 pin 37 directly to U44 pin G1 5. Change R720 and R721 (DPRSet) to 800Ohms 6. No pop 100Kohm pull ups R182 7. Add 100Kohm PD on the DPC_AUX_SW and DPC_AUX#SW. R1026,R1027(@). 8. Remove Q114 ,R795. Connect JDOCK1 pin 40 directly to U44 pin F3.	X03
134	30	LAN SW	11/12/2007	Dell	SCH164889: Change L20-L27 from 36nH to 22nH	Change MDI bus value at L20~ L27 from 36nH to 22nH. These changes will help improving the IEEE Return Loss margins	X03
135	33	USB	11/12/2007	Compal	LAY164667: USB Switch Layout Changes following Vendor's recommendation	Change Common mode choke connection to between switch and connector.	X03
136	21	DP	11/13/2007	Compal	TASK163764: Input derating data before PT gerber	1. Applying voltage on ceramic capacitors: C921~C929, C1044 2. Applying current on inductor: L65, L67, L76 3. Applying current on diode: D10	X03
137	38	EC	11/13/2007	Dell	SCH164928: Change Netnames Following Power Circuit Changes	From "ACAV_IN_DOCK" to "ACAV_DOCK_SRC" From "ACAV_IN_DOCK#" to "ACAV_DOCK_SRC#" From "ACAV_IN_MB/DOCK" to"ACAV_IN" Remove U59, C1012. Add U69, C1051.	X03
138	21,50	DP,GFX	11/13/2007	Dell	SCH164956: More DP clean up on discrete	1. De-pop R181, De-pop R183 2. Populate R1024 (pull-down on DPB_MB_AUX) 3. Populate R278 (pull-up on DPB_MB_AUX#) 4. Add pull-down pads for DPB_DOCK_AUX and DPB_DOCK_AUX# 5. De-pop R1026 6. Change R193 to 3.48 kohm 7. Change DPB_HPD# to DPB_HPD and DPC_DOCK_HPD# to DPC_DOCK_HPD	X03
139	37	SIO	11/13/2007	Dell	DF174483: [SSI2]The LCD/LED will keep had power with USB device when unplug AC & Battery.	1) Add 100k no pop pull-ups to +3.3V_ALW2 on: - USB_SIDE_EN# - ESATA_USB_PWR_EN# - USB_POWERSHARE_PWR_EN# 2) No stuff R502, R923, R929.	X03
140	18	4002	11/14/2007	Dell	SCH162823: Connect PWR_MON_GFX to VIN1 on the EMC4002 - Depop the UL circuit	- Connect PWR_MON_GFX to VIN1 on the EMC4002 - Add a pull-down resistor on the pin on the guardian - Remove PWR_MON_GFX from VCP2	X03
141	37	SIO	11/14/2007	Dell	SCH165017: Change PU to PD on SYS_LED_MASK#	change R658 from a no stuff pull-up to a populated pull-down	X03
142	39	1088	11/14/2007	Dell	SCH165024: Remove nostuff parts from Roush schematic	Remove U38 (ECE1088), C677, C676, R747, R650, R826, R557	X03
143	36	USH	11/15/2007	Dell	SCH165076: Remove unnecessary Contactless SmartCard components	R495, R799, C777, R499, and C783 can be replaced with a short, and R800 can be replaced with an open	X03

PROPRIETARY NOTE: THIS SHEET OF ENGINEERING DRAWING AND SPECIFICATIONS CONTAINS CONFIDENTIAL TRADE SECRET AND OTHER PROPRIETARY INFORMATION OF DELL INC. ("DELL") THIS DOCUMENT MAY NOT BE TRANSFERRED OR COPIED WITHOUT THE EXPRESS WRITTEN AUTHORIZATION OF DELL. IN ADDITION, NEITHER THIS SHEET NOR THE INFORMATION IT CONTAINS WAY BE USED BY OR DISCLOSED TO ANY THIRD PARTY WITHOUT DELL'S EXPRESS WRITTEN CONSENT.

Version Change List (P. I. R. List)

Item	Page#	Title	Date	Request Owner	Issue Description	Solution Description	Rev.
144	50	GFX	11/15/2007	Dell	SCH165071: Need to depop R832 and R797 to pass HDMI spec	Depop R832, R797.	X03
145	21	DP	11/15/2007	Dell	SCH165069: Depop R1022 for discrete	Depop R1022	X03
146	24,33,36	USH,BIO, ICH	11/15/2007	Dell	SCH165067: FP_RESET# signal from USH to Fingerprint reader	1) Connect USH SMC_ADD_23 (Pin C3) to Fingerprint reader connector JBIO1 pin5 with a 4.7K pull-up to +3.3V_RUN. R1034 added. 2) Remove BIO_DET# conncetion to the ICH9M pin A8	X03
147	37	SIO	11/15/2007	Dell	SCH165068: Add FET buffer on signal INSTANT_ON_SW# to 5028 pin 28	Add D66, R1035, R1036	X03
148	27,38	CODEC,EC	11/15/2007	Dell	DF179111: SMBus EA some item measure fail	1.LCD_SMBCLK/LCD_SMBDAT change PU resistor of R548,R549 to 2.2K 2.DAI_SMBCLK/DAI_SMBDAT stuff R334,R335 to 2.2K 3.DOCK_SMB_CLK/DOCK_SMB_DAT change PU to +3.3V_ALW (R565, R567)	X03
149	27,36	CODEC,USH	11/19/2007	Compal	Some Crystal is not PSL parts.	Y3, Y5 change to use KDS's crystal replace non-PSL part.	X03
150	10,22,27, 29,36,50	NB,SB,USH, CODEC,LOM	11/21/2007	Compal	Change chips new revision P/N for PT1 Chnage VRAM Strapping setteing for Qimonda	Change U2,U10,U16,U23,U32,U44 P/N Nostuff R717. Change R725 to 34.8K.	X03
151	37	SIO	11/20/2007	Dell	Change BID to X04 (100)	Change R531, R534, R535 stuff. R529, R530, R536 nostuff.	X04
152	34	Mini-Card	11/20/2007	Dell	SIM card Footprint change per ME request	JSIM1 footprint change	X04
153	24	SPI	11/22/2007	Dell	Unstuff 2nd SPI ROM for ICH	Depop U13,R304,R305,R306,R308,R309,R295,C329	X04
154	21,50	DP	11/22/2007	Dell	SCH165325: For PT1 SMT: Build PT1 Discrete with R720 and R721 = 1k Ohm SCH165517: DP stuffing options for Roush PT1	1.Pop R336,R337,R1028,R1029,R182,R183,R1026,R1027 2.Change R720,R721 to 1K	X04
155	35	Docking	11/26/2007	Compal	SCH165307: Docking Conn ESD Concern - Dock Power pins	Remove D65 & change D64 fooptint from SOD323-2 to SOT23-3	X04
156	24	SPI	11/28/2007	Dell	SCH165504: Remove 2nd SPI ROM for ICH	Remove U13,R304,R305,R306,R307,R308,R309,R295,C329	X04
157	34	Mini-Card	11/28/2007	Compal	SCH165319: PCIE_MCARD1_DET# pull-up to wrong power rail	No-stuff R439 and add 100K of R443 to pull-up +3.3V_ALW_ICH	X04
158	38	EC	11/29/2007	Compal	SCH165505: X04: Add pop options to change INSTANT_ON_SW# from RTC to +3.3V_ALW Rail	Add 0ohm of R445,100K of R589. No-stuff R560,C1011,U57,D66, Pop R1036	X04
159	30	LAN Switch	11/29/2007	DELL	LAY165172: LOM Feedback for X04 - Improve routing on the MDI signals	Swap LAN_TX[0..3]+/LAN_TX[0..3]-,SW_LAN_TX[0..3]+ /SW_LAN_TX[0..3]-,DOCK_LOM_TRD[0..3]+/DOCK_LOM_TRD[0..3]-	X04
160	13	MCH	11/29/2007	Compal	SCH165564: Remove D1,R122 from Intel request	No-stuff D1,R122 from Intel request	X04
161	7	CPU	11/30/2007	Compal	SCH165378: No-stuff H_RESET# pull-up resistor of R63	No-stuff R63	X04
162	21	DP	11/30/2007	Compal	SCH165621: X04: Populate D10 with a 0 Ohm resistor	D10 PCB Footprint can't stuff 0805 or 1210 resistor directly, so add 1210 0ohm of R210 and no-stuff D10.	X04
163	36	USH	12/3/2007	Broadcom	SCH165660: SC_DET issue from Broadcom highlight	Add R914 pull-down contact to SC_DET on JSC1 pin2 and no-stuff	X04
158	28	Amplifier	12/5/2007	DELL	SCH165765: Audio Feedback: Change 2 resistor values, Add two resistors on IO board	Change R818,R827 to 1K_0402_1%	X04
159	37,42	Wireless	12/5/2007	DELL	SCH165763: Change Wireless net name (on is toward the user)	Change net name from WIRELESS_ON/OFF# to WIRELESS_ON#/OFF	X04
160	36	USH	12/5/2007	Broadcom	SCH165731: Follow Broadcom request to modify Maybach schematic for USH	1.Depop R490,C591 2.Pop R829 and depop R467 3.Depop R849 4.Change R476 to 5.1M ohm and R488 to 3.3M ohm 5.No-stuff C594 6.Change R473,R771 to 1K 7.Change C621,C706,C646 to X5R	X04
161	18	EMC4002	12/7/2007	SMSC	SCH165882: Disable EMC4002 LDO	Add R211 and no-stuff R149	X04
162	42	LED	12/7/2007	Compal	SCH165913: +5V_RUN backdrive issue on S3 mode	Add D67 between Q97 and Q98	X04
166	37	ECE5028	12/8/2007	Compal	INSTANT_ON_SW double pull-up	No-stuff R1035	X04
167	29	LAN	12/8/2007	Intel	Intel request if didn't use ICH GPIO12 to control LAN_DISABLE need connected to 3.3V	Add pull-up resistor of R295 to +3.3V_ALW_ICH and no-stuff	X04
168	29	LAN	12/8/2007	Compal	SCH165838: De-pop R1008 for control LAN PHY enable form BIOS setting	De-pop R1008	X04

DELL CONFIDENTIAL/PROPRIETARY

PROPRIETARY NOTE: THIS SHEET OF ENGINEERING DRAWING AND SPECIFICATIONS CONTAINS CONFIDENTIAL TRADE SECRET AND OTHER PROPRIETARY INFORMATION OF DELL INC. ("DELL") THIS DOCUMENT MAY NOT BE TRANSFERRED OR COPIED WITHOUT THE EXPRESS WRITTEN AUTHORIZATION OF DELL. IN ADDITION, NEITHER THIS SHEET NOR THE INFORMATION IT CONTAINS WAY BE USED BY OR DISCLOSED TO ANY THIRD PARTY WITHOUT DELL'S EXPRESS WRITTEN CONSENT.

Version Change List (P. I. R. List)

Item	Page#	Title	Date	Request Owner	Issue Description	Solution Description	Rev.
169	27	Auido Codec	12/10/2007	IDT	SCH165972: Follow IDT request to change C408~C411 to 2.2uF	Change C408~C411 to 2.2U_10V_0805 X5R	X04
170	31	Cardbus	12/10/2007	Ricoh	SCH165973: Follow Ricoh request to modify schematic	Add C622,C1012,C1016,C1036,C1037,R1037,R799,R800 No-stuff R684,R790,R657	X04
171	18,21, 37,38,42	TTL	12/13/2007	Compal	SCH166138: About 74AHCT1G08GW AND Gate issue	Change U68, U62, U69, U57, and U65 from 74AHCT1G08GW to 74AHC1G08GW	X04
172	38	5035	12/14/2007	Dell	TASK166116: Updated GPIO Map	The signal ACAV_DOCK_SRC# can be removed from the 5035	X04
173	35	Docking	12/14/2007	Dell	SCH166112: Add a pull-up on DOCK_DET# to +3.3V_ALW	Add R1038. R124 nostuff.	X04
174	42	LED	12/17/2007	Dell	SCH166225: Add mask signal on NUM/SCRL/CAPS LEDs	Add Q150. R1039 nostuff.	X04
175	33, 38	USB,5035	12/18/2007 Updated	Dell	SCH166229: Update Cell charger detect circuit	Add D68, D69, R1040. Del R927. C1042 change value to 1uF.	X04
176	29	PHY	12/17/2007	Dell	SCH165838: De-pop R1008 for control LAN PHY enable form BIOS setting	Pop R1008 because new BIOS fixed this softstrap issue	X04
177	6,8,10,24	CLOCK,CPU, MCH, ICH	12/17/2007	Dell	SCH166180: Intel NOA test point compliance	Add R1041~R1045.	X04
178	33	USB	12/17/2007	Dell	SCH166140: Add SATA repeater for ICH to ESATA trace over 5inch issue	Add U72, C488~C490, C1052, R305~R307.	X04
179	23,50	ICH,GPU	12/18/2007	Dell	SCH166293: Roush X04 Discrete: Remove HDA resistors	Del R673~R676, R678, R243~R246, C309. U10.AH3 as NC.	X04
180	31	RICOH	12/18/2007	Dell	SCH165973: Follow Ricoh request to modify schematic	1.Connect totally 10uF bulk capacitor(s) to 1.5VOUT pins. 2. Connect totally 10uF bulk capacitor(s) to AUXOUT pins. 3. Remove pull-up resistor from CPPE# signal. 4. Remove pull-up resistor from CPUSB# signal. 5. SHDN#, apply NC/open 6. Remove pull-up resistor from SHDN# 7. Apply pull-down resistor to SPKROUT pin. 8. Add capacitors for CCD[2:1]# 9. Connect CADR22 to CPUSB# pin of ExpressCard Connector 10. Connect CDATA2 to PERST# pin of ExpressCard Connector 11. Add capacitor for FIL0, 0.01uF	X04
181	35,38	5035, Docking	12/18/2007	Dell	SCH166292: Add Dock changes for GPIO50 pin 41 of the 5035	Add R1046, C1053. 5035 GPIO50 connected to Docking pin 140.	X04
182	18,33	4002,eSATA	12/19/2007 Updated	Dell	TASK166288: ESATA Redriver Questions	1. Using the Guardian LDO set to +1.8V for the VDD 2. Changed power rail to +1.8V_RUN 3. Connected the enable to a pull-up to the same rail as VDD 4. Use PI2EQX3201B. 5. No any 2nd source for this part	X04
183	50	GPU	12/19/2007	Dell	SCH166329: NVidia feedback to pop R1009 and R1010	Populate R1009 and R1011	X04
184	36	USH	12/19/2007	Dell	SCH166328: Add a series resistor on PLTRST3# for the USH RESET_N	Add R1048	X04
185	36	USH	12/19/2007	Dell	SCH166327:Add a no stuff diode in parallel w/ R464	Add D70	X04
186	42	LED	12/20/2007	Compal	SCH166355: Add Bypass Capacitor for TTL gate	Add C1058~C1061	X04
187	36	USH	12/20/2007	Compal	SCH166388:Change USH Circuit per Broadcom Feedback	1.Change R476 to 5.1M ohms and R488 to 3.3M ohms to lower 2.Pop D70, C641, C647,C1020,C1021,R474,R829. Depop R464,R466,R467	X04
188	35	Docking	12/20/2007	Dell	SCH166399:Roush + Docking AC protect issue(crowbar)	Add D71, R1068.	X04
189	13	MCH	12/21/2007	Compal	Debug +3.3V_RUN backdrive issue on S3 mode	Add R1076	X04
190	51	GPU	12/27/2007	NVIDIA	SCH166484: Follow NV feedback to update DIS schmatic	No stuff R699,R700,C775/ Stuff R852. Change C855 to 470P.C857 to 4.7u. Add C309,C329,R1079,R1080	X05
191	37	SIO	12/27/2007	DELL	For Power change Media Slice issue	Add D65,R1078 and reserve R1081	X05
192	33	ESATA	12/27/2007	DELL	SCH166445: ESATA feedback on 3201 pin 11 and pin 12	Reserve R1056,R1057,R1066,R1067,R1069,R1070	X05
193	36	Broadcom	12/27/2007	DELL	SCH166428: Add a No Stuff series resistor between PLTRST3# and RST_N	Reserve R1071	X05

DELL CONFIDENTIAL/PROPRIETARY

PROPRIETARY NOTE: THIS SHEET OF ENGINEERING DRAWING AND SPECIFICATIONS CONTAINS CONFIDENTIAL TRADE SECRET AND OTHER PROPRIETARY INFORMATION OF DELL INC. ("DELL") THIS DOCUMENT MAY NOT BE TRANSFERRED OR COPIED WITHOUT THE EXPRESS WRITTEN AUTHORIZATION OF DELL. IN ADDITION, NEITHER THIS SHEET NOR THE INFORMATION IT CONTAINS WAY BE USED BY OR DISCLOSED TO ANY THIRD PARTY WITHOUT DELL'S EXPRESS WRITTEN CONSENT.

Version Change List (P. I. R. List)

Item	Page#	Title	Date	Request Owner	Issue Description	Solution Description	Rev.
194	All	All	01/23/2008	Compal	Update changes following PT2 MEMO	Update changes following PT2 latest MEMO Rev.0.6	X05
195	37	SIO	01/23/2008	Dell	SCH166607: UMA X04 - No Stuff R1081	No Stuff R1081	X05
196	7	CPU	01/23/2008	Dell	SCH166740: X05 - Change ITP resistor values	R67->27 ohm,R64->39 ohm,R66->649 ohm,R65->150 ohm, R57->124 ohm	X05
197	36	USH	01/23/2008	Dell	SCH166962: Roush X05 - EA issue with USB to 5880	Change R468 and R469 to 0 Ohms	X05
198	33	USB	01/23/2008	Dell	SCH167262: X05 - Add 0 Ohm bypass resistors on U54 for USB port 2	Add R1082, R1083	X05
199	42	LED	01/28/2008	Compal	DF192207: Power LED current over spec	Change R1001 to 82 ohm	X05
200	36	USH	01/28/2008	Dell	SCH167383: ROW TPM Disable Pop Options	Make D70, and R841 = 5@ (pop for USH TPM) Make R483 = 4@ (for China config)	X05
201	18	EMC4002	01/29/2008	Dell	SCH167478: Change R152 from 0 Ohm to 0.82 Ohm for EMC4002 LDO Input	Change R152 from 0 Ohm to 0.82 Ohm	X05
202	6	Clock	02/12/2008 Update	Dell	SCH167489: L1 Part Derating Problem	Change L1 to BK2125HS601-T	X05
203	36	USH	01/30/2008	Compal	SCH167486: Smartcard Circuit Update	R849 must be pop-ed to support USH low power	X05
204	35	Docking	01/31/2008	Compal	SCH167590: Docking Detection Circuit Update	No stuff R1068.	X05
205	21	DP	02/12/2008	Dell	SCH167949: Add pass gate FETs to Roush Discrete	Add U73, U74, C1064, C1065, R1084~R1087, Q151, Q152	X05
206	33	eSATA	02/12/2008	Dell	SCH167851: X05 - Pop R1058 for ESATA EA	Stuff R1058	X05
207	10	MCH	02/12/2008	Dell	SCH167660: BOM option for Intel debug	Add R1088 (no stuff)	X05
208	27	CODEC	02/13/2008	Compal	SCH168055: PC BEEP Circuit Update	Nostuff R328. Change R327 and R828 to 499K	X05
209	21	DP	02/19/2008	Dell	SCH168269: Correction to meet DP spec	Change R996 to 1 M ohm	X05
210	21	DP	02/19/2008	Dell	SCH168268: More DP changes for discrete	Change R1084, R1085, R1086, R1087 to 10k. Change R336, R337, R1028, R1029, R1026, R1027 to no pop. Change R193 to 5.11k	X05
211	27,28	CODEC	02/19/2008	Dell	SCH168158: SSM2602 Circuit Update	Add R1089, R1090 resistors around C410 and C411. Change C406 to 10uF cap to pin 20 of U15 2602 Change C436 and C437 from 2.2uF 1206 to 10uF 1206 (DF194434)	X05
212	07	ITP	02/19/2008	Dell	SCH168093: Populate JITP1 and Supporting Components	Populate JITP1	X05
213	36	USH	02/21/2008	Dell	Broadcom feedback: Pi filter	Add L71, L72, C1070, C1071	X05
214	27	CODEC	02/26/2008 Update	Dell	SCH168407: SSM2602 Circuit Review Feedback	Remove:C395 Add:L70, L71, C1066, C1067, C1068, C1069, R1091, R1092. Value change:C391,C406,C397,C401,C408,C409,C410,C411,R340,R342. Connection change:R1089, R1090, C396, C397, C398, R346, R347.	X05
215	39	TP	02/27/2008	Dell	SCH168492: Touchpad Changes to fix backdrive	Add R1093, R1094. No stuff R594, R595.	X05
216	27	Audio	02/27/2008	ADI	SCH168407: SSM2602 Circuit Review Feedback	Add:L70, C1066, C1067, C1068, C1069 Value change:C391,C406,C397,C401,C408,C409,C410,C411,R340,R342. Connection change:R1089, R1090, C396, C397, C398	X05
217	34	SIM	02/27/2008	Compal	SCH168596: Change SIM Card Connector Back to Push-Push Button Type	Changed JSIM1 to push-push type	X05
218	18,37,38	4002,5028, 5035	03/04/2008	SMSC	SCH168546: SMSC ST Feedback for 4002/5028/5035	R153 change to 3.16K. Add C1072. No stuff R900.	X05
219	37	5028	03/04/2008	COmpal	BID Chnage	Stuff R529. No stuff R534.	X05
220	20	CRT	03/04/2008	Compal	SCH167856: X05 - RGB Filter Change	R1095~R1097(0 ohm) replace L8,L9,L10. No stuff C255,C256 C257,C390,C518,C996.	X05
221	21	DP	03/04/2008	Dell	SCH168809: Add pull down to prevent floating input	Add R1098. No stuff R185, R187	X05
222	35	Docking	03/07/2008	Dell	LAY169084: Fix D26 routing for discrete	D26 pin 4 and 7 should be connected to DPC_DOCK_HPD	X05
223	34	Mini-Card	03/07/2008	Dell	SCH169083: Pop R840 for WIMAX LED support post RTS	Populate R840.	X05
224	33	USB	03/07/2008	Dell	SCH169019: Pop R1082 & R1083 to bypass USB buffer	Populate R1082 & R1083. No stuff U54.	X05
225	55	GFX	03/07/2008	Dell	SCH169006: NVidia Feedback for X05 Discrete	Change R776 from 243 Ohm to 475 Ohm SPDIF: Make R856 and R857 no stuff	X05
226	21	DP	03/10/2008	Dell	SCH168766: Add 1k ohm pop option for nVidia silicon concern	Add R1099, R1100, R1101, R1102	X05

DELL CONFIDENTIAL/PROPRIETARY

PROPRIETARY NOTE: THIS SHEET OF ENGINEERING DRAWING AND SPECIFICATIONS CONTAINS CONFIDENTIAL TRADE SECRET AND OTHER PROPRIETARY INFORMATION OF DELL INC. ("DELL") THIS DOCUMENT MAY NOT BE TRANSFERRED OR COPIED WITHOUT THE EXPRESS WRITTEN AUTHORIZATION OF DELL. IN ADDITION, NEITHER THIS SHEET NOR THE INFORMATION IT CONTAINS WAY BE USED BY OR DISCLOSED TO ANY THIRD PARTY WITHOUT DELL'S EXPRESS WRITTEN CONSENT.

Version Change List (P. I. R. List)

Item	Page#	Title	Date	Request Owner	Issue Description	Solution Description	Rev.
227	36	USH	03/10/2008	Dell	SCH169129: Smart Card Insertion	Change R849=1.5k, and R913=300 Ohm	X05
228	20	CRT	03/10/2008	Compal	SCH167856: X05 - RGB Filter Change	1. Removed C390, C518, C996, C255, C256, C257, C267 and C268. 2. Short L8, L9 and L10 (Replaced by R1095~R1097).	X05
229	21	DP	03/10/2008	Dell	SCH168711:Modify circuit to comply to DP 1.1a spec	1. Depop R336, R337, R1028, R1029, R182, R183, R1026, R1027. 2. Add SN74CBTD3306CPWR switches (U75~U78) to DDC lines. 3. Change R996 to 1 M ohm 4. Add a 1 M (R1098) pull down on U9 pin 39. Depop R185 and R187. 5. Change R193 to 5.11k. 6. Replace F1 with GEC 1206L150-C PTC. 7. Add a 10 uF cap (C1075) from +VDISPLAY_VCC to ground	X05
230	7	ITP	03/10/2008	Dell	SCH168709: Issue to track ITP	Add R1103~R1113	X05
231	50	GPU	03/11/2008	Dell	SCH169189: Add pads for a .1uF cap on HPD signals	Add C1076, C1077 and no-stuff	X05
232	6,23,24, 27,29,37, 38	RC Termination	03/11/2008	Compal	SCH169206: WWAN Noise Solution	- Add R527, R744, R588, R285, C656, C673, C318, C302, C300 - Value Change R786, R379, R26, R29, R32, R19	X05
233	34,42	MiniCard	03/11/2008	Compal	SCH169218: Remove Screw Hole and MiniCard Latchs	Remove H8, JLAT2, JLAT3	X05
234	23	Crystal	03/12/2008	Compal	ME add new z-high limit cause 32.768Khz material interfere.	Change Y1 Footprint from Y_1TJS125DJ4A420P_4P to Y_1TJE125DP1_2P	X05
235	26,32	ME	03/12/2008	Compal	ME update ODD,PCMCIA connector footprint Remove Hole & Mini card latch from ME request	Change JSATA1 Footprint to TYCO_2-1759838-8_13P_RV-T, JCBUS1 to MOLEX_48315-0012_68P_RT-T.Delete H8,JLAT2,JLAT3	X05
236	31	SD card	03/12/2008	Ricoh	SCH169273: Resolve SD_CLK under shoot issue below from Ricoh request	Add C491 close to JSD1 pin8	X05
237	36	RFID	03/12/2008	Broadcom	SCH169256: Need to make changes to RFID schematic connections	Follow Broadcom comment to modify circuit	X05
238	36	DAI	03/13/2008	ADI	Follow DELL request to modify	1. U15 pin12 to GND and remove C396 2. Change C1066, C1067, C1068 and C1069 to 1nF 3. Change C408 and C409 to 1uf. 4. Change C410 and C411 to 0.22uF 5. Change R340 and R342, R1091 and R1092 to 200 Ohm 6. Change R1089 and R1090 to 10M.	X05
239	35	Docking	03/13/2008	Compal	DF193241: <ESD> Enhance ESD: Air discharge to jack screw cause system hang-up	Add C672 close to JDOCK1 pin39, stuff C1076	X05
240	27	Auido	03/13/2008	Compal	EMI team find had noise at 2MHz	Reserve C676 on DMIC_CLK signal	X05
241	24,37	SPI ROM	03/14/2008	DELL	SCH169380: GPIO for Write Protect (WP#) for SPI Flash	1.Add 2nd SPI ROM schematic 2.Add serial resistor and contact SPI_WP#_SEL signal from U35.23 to U12.3,U13.3	X05
~~242~~	~~36~~	~~SPI ROM~~	~~03/14/2008~~	~~Compal~~	~~U34 component z-high interfere ME define~~	~~Change package from SO8 to VFQFPN8~~	~~X05~~
243	31	CARDBUS	03/17/2008	Compal	SCH169447: 24.576MHz (X3) Crystal Circuit Update	Add R1117 no stuff	X05
244	21	DP	03/17/2008	Compal	SCH169464: DVI Pull Ups Changes per NV suggestion	R1084~R1087 change value from 10K to 2.2K	X05
245	6	Clock	03/18/2008	Dell	CLK_PCI_DOCK is shared with CLK_PCI_PCM. It does not follow the Roush PIG, and causes risk for docking scenarios. (Roush gating list)	CLK_PCI_PCM change net from pin32 to pin33 of U1	X05
246	27	DAI	04/01/2008	Compal	SCH169971: Add 0ohm between double inverter for DAI function	Add R762	X06
247	36	RFID	04/01/2008	Compal	Change ESD Diode package	Change from BAS40-04_SOT23-3 to DA204U_SOT323-3	X06
248	37	SIO	04/03/2008	DELL	SCH170088: ICH LOM errata update	1.PBAT_PRES# contact to U35 pin 97 2.LAN_DISABLE#_R contact to U35 pin88. 3.Add D38,C677 and no-stuff.R1008 change to 4.3K and no-stuff.	X06
249	35	Docking	04/03/2008	DELL	SCH170091: Add series 0603 zero ohm on DPB_DOCK_HPD and DPC_DOCK_HPD_R.	Add R387	X06
250	36	USH	04/23/2008	Compal	Add 3.3V_RUN discharge circuit for backdrive	Stuff R625, Q79.	X07

DELL CONFIDENTIAL/PROPRIETARY

PROPRIETARY NOTE: THIS SHEET OF ENGINEERING DRAWING AND SPECIFICATIONS CONTAINS CONFIDENTIAL TRADE SECRET AND OTHER PROPRIETARY INFORMATION OF DELL INC. ("DELL") THIS DOCUMENT MAY NOT BE TRANSFERRED OR COPIED WITHOUT THE EXPRESS WRITTEN AUTHORIZATION OF DELL. IN ADDITION, NEITHER THIS SHEET NOR THE INFORMATION IT CONTAINS WAY BE USED BY OR DISCLOSED TO ANY THIRD PARTY WITHOUT DELL'S EXPRESS WRITTEN CONSENT.

Version Change List (P. I. R. List)

Item	Page#	Title	Date	Request Owner	Issue Description	Solution Description	Rev.
251	37	SIO	04/23/2008	Compal	BID change to X07	Depop R535, Populate R530	X07
252	24	ICH	04/23/2008	Dell	SCH170773: No Stuff 2nd SPI ROM (U13)	Depop U13, R304, R380, C395, R308, R309, R384, R1060, Populate R298	X07
253	36	USH	05/02/2008	Dell	SCH170926: Broadcom Feedback	Populate R705, R723, R724, R732, R733	X07
254	40	Power Control	05/02/2008	Dell	SCH170717: Power Sequence Check with Discharge Circuit	Change R625 from 10 ohm to 39 ohm	X07
255	35	Docking	05/12/2008	Compal	DOCK_DET# need not have pull down	Depop R1068	X07
256	33	TP	05/15/2008	Compal	DF216972: <ESD> Contact +/-6kv to FP cause system lock-up	Pop U51	X07
257	27	AUDIO	05/23/2008 Update	Compal	SCH171755/DF216224: DMIC EMI failed	Remove R338. Add L78. Pop C676.	X07
258	32	Express	05/15/2008	Compal	DF216223: EMI radiation failed for express card	Depop R791, R792. Pop L64.	X07
259	40	Power	05/23/2008	Compal	SCH171795: Power Step on +3.3V_ALW_ICH rail	C688 change value to 3300pF	X07
260	6	Clock	05/29/2008	Dell	SCH172103: No Stuff ITP clock resistors for X07	No stuff R18, R21.	X07
261	36	USH	06/04/2008 Update	Compal	SCH172075: RFID Implementation	C639 and C643 have to use X5R. L71, L72 change to 2%.	X07
262	24	ICH	06/02/2008	Compal	SCH170341: Sawtooth waveform on SERIRQ Issue	Add R1126	X07
263	42	LED	06/02/2008	Compal	SCH172191: Breath Power LED Resistor Change	Change value from 82 to 100 ohm (R1001)	X07
264	38	EC	06/03/2008	Dell	SCH172185: Connect ODD_DET# to GPIO41 5035.34	Connect ODD_DET# to GPIO41 5035.34, ICH9.AE19, JSATA1.8	X07
265	37	SIO	06/03/2008	Dell	SCH170391 (SLICE_BAT_PRES#)	R504 change to 4.7K. Add PC266 (1500pF)	X07
266	27	AUDIO	06/03/2008	Compal	TASK169849: Regress Audio HP and Microphone test	L70 change value to 47UH_LBMF1608T470M_20%	X07
267	27	Nvidia	06/09/2008	Nvidia	Add pull-down resistor on HDA_RST#(U44.C6) & GPIO3(U44.M2)	Add pull-down resistor on HDA_RST#(U44.C6) & GPIO3(U44.M2)	X07

DELL CONFIDENTIAL/PROPRIETARY

PROPRIETARY NOTE: THIS SHEET OF ENGINEERING DRAWING AND SPECIFICATIONS CONTAINS CONFIDENTIAL TRADE SECRET AND OTHER PROPRIETARY INFORMATION OF DELL INC. ("DELL") THIS DOCUMENT MAY NOT BE TRANSFERRED OR COPIED WITHOUT THE EXPRESS WRITTEN AUTHORIZATION OF DELL. IN ADDITION, NEITHER THIS SHEET NOR THE INFORMATION IT CONTAINS WAY BE USED BY OR DISCLOSED TO ANY THIRD PARTY WITHOUT DELL'S EXPRESS WRITTEN CONSENT.

Version Change List (P. I. R. List)

Item	Page#	Title	Date	Request Owner	Issue Description	Solution Description	Rev.
1	48	Charger	08/31	Saha	ACAV_IN_NB will pull high when DOCK adapter insert.	Change PR145, PIN2 connection from +SDC_IN to +DC_IN	X02
2	48/49	Charger Selector	08/31	Saha	ACAV_IN_DOCK# won't pull high when battery only mode.	Change ACAV_IN_DOCK# pull high to +3.3V_ALW2 Add inverter for ACAV_IN_DOCK PQ27 enable change to ACAV_IN_DOCK Confirm HW delete U58 and R124 pull up to +RTC_CELL	X02
3	48	Charger	09/28	DELL Doug	EE work item SCH162823	Connect ISL88731_ICM to VCP2 with a series resistor Depop the UL circuit (bottom of page 48)	X03
~~4~~	~~43~~	~~Charger~~	~~09/28~~	~~Saha~~	~~DFX team suggest change GND to PIN1 and PIN2~~	~~PJPDC1 PIN1/PIN2 is -DCIN_JACK, PIN3 is DCIN_CBL_DET# PIN4 NB_PSID, PIN5/PIN6 is +DCIN_JACK~~	~~X03~~
5	PWR	Snubber	10/22	Guangyong DELL	DELL request add a snubber circuit on every regulator	Add below location of regulator switching node +3.3V_ALW: PR276, PR251 +5V_ALW: PR277, PC245 +1.5V_RUN:PR278, PC246 +1.05V_M:PR279, PC246 +1.8V_SUS:PR280, PC249 +VCHGR:PR281, PC249 VGA_CORE:PR282, PC250	X03
6	43	+DC_IN	10/22	Guangyong DELL	Add a resistor around AC power soft-start fet	Add PR251 0_0402_5% before NB_AC_OFF for delay switch	X03
7	43	+DC_IN	11/2	Compal	DCIN_CBL_DET# damage ECE5028	Add ESD diedo PD13 DA204U_SOT323 at DCIN_CBL_DET# Series PR67 1K_0402_5% between PJPDC1, PIN1 and DCIN_CBL_DET# Parallel 0.47uF_0402_6.3V on DCIN_CBL_DET#	X03
8	48	Charger	11/2	Compal	NB DC blocking MOSFET won't turn off when Dock AC insert.	Add PQ44 RHU002N06 control NB DC blocking MOSFET. Control singal is NB_AC_OFF Series PR284 200K_0402_1% between PQ44, PIN1 and NB_AC_OFF Add PD30 B540C parallel PQ34	X03
9	49	Selector	11/2	Compal	PBATT DC blocking MOSFET won't turn off when Docking AC insert. It will cause Battery or adapter protect.	Add PD18 RB715F_SOT323, PD20 and PD19 RB751V_SOD323, PR329 100K_0402_5% PR328 and PR327 47K_0402_5%, PR326 and PR325 240K_0402_5% PQ40 2N7002DW-7-F_SOT363-6, PQ59 NTG6161PT1G_TSOP6 Extra net name add +NBDOCK_DC_IN_SS from Docking connector	X03
10	43	+DC_IN	11/2	Merle DELL	Roush component and rework changes for Dcoking test	PC5 change form 0.47uF_0805_25V to 0.1uF_0805_25V PR16 change form 240K_0402_5% to 1M_0402_5% PR21 change form 47K_0402_1% to 220K_0402_5% PR22 change form 47K_0402_1% to 22K_0402_5% PR283 change form 0_0402_1% to 100K_0402_5%	X03
11	62	MAX8632_VGA	11/7	nVidia	NB9x's GPU CORE Voltage	Change PR203 to 90.9K_0402_1%, PR205 to 93.1K_0402_1%, PR209 to 68.1K Add PR288 221k_0402_1% , PC253 100P_0402_50V, PR289 63.4K_0402_1% PQ60 BSS138W, PC252 0.01u_0402_16V PR287 100K_0402_5%, PR286 and PR285 10K	X03
12	43	+DC_IN	11/8	Compal	Battery slice need detect NB battery is insert or not.	Add PQ61 NTR4502PT1G, and PD32 RB751_SOD323 Connect to DOCK_SMB_ALERT# and SLICE_BAT_PRES#	X03

PROPRIETARY NOTE: THIS SHEET OF ENGINEERING DRAWING AND SPECIFICATIONS CONTAINS CONFIDENTIAL TRADE SECRET AND OTHER PROPRIETARY INFORMATION OF DELL INC. ("DELL") THIS DOCUMENT MAY NOT BE TRANSFERRED OR COPIED WITHOUT THE EXPRESS WRITTEN AUTHORIZATION OF DELL. IN ADDITION, NEITHER THIS SHEET NOR THE INFORMATION IT CONTAINS WAY BE USED BY OR DISCLOSED TO ANY THIRD PARTY WITHOUT DELL'S EXPRESS WRITTEN CONSENT.

Version Change List (P. I. R. List)

Item	Page#	Title	Date	Request Owner	Issue Description	Solution Description	Rev.
~~13~~	~~49~~	~~Selector~~	~~11/8~~	~~Compal~~	~~NB_AC_OFF_BJT can't turn off when Dock adapter exist~~	~~Change PQ39 to PQ61A/B (2N7002DW-7-F), NB_AC_OFF_BJT control by NB_AC_OFF~~	~~X03~~
14	48	Charger	11/8	Compal	Charger of ISL88731 will turn off When ACIN is no power	Add LM393 to replace ISL88731 ACOK function(PU11B)	X03
15	48	Charger	11/09	Merle Dell	+PWR_SRC exist on Docking connector through the DOCK_DCIN_IS+ and -	Add PQ62 NTGD4161PT1G series DOCK_DCIN_IS+ and - Add PQ63 RHU002N06 to control PQ62 on/off	X03
16	43	+DC_IN	11/09	Kyle DELL	No pop PD13, PR67 and PC254. Reduce mass build risk	No pop PD13, PR67 and PC254.	X03
17	48 49	Charger Selector	11/12	Merle DELL	A global signal name change for all notebooks	From "ACAV_IN_DOCK" to "ACAV_DOCK_SRC" From "ACAV_IN_DOCK#" to "ACAV_DOCK_SRC#"	X03
18	48	Charger	11/12	Merle DELL	Add pull up resistor at PU11.7.to +3.3V_ALW Change signal name at Node PR157.1 from "ACAV_IN_NB" to "ACAV_IN" Show PR156 as a stuff.	Remove PR337, Change PR145 from +DC_IN to +SDC_IN. Pop PR145 and PR156, change PR157 net name from ACAV_IN_NB to ACAV_IN. Add PR341 100K_0402 pull up +3.3V_ALW at PU11B output.	X03
19	43	+DC_IN	11/22	Merle DELL	NB and Dock adapter swap issue	PR21 change to 1M_0402_5% PC5 change to 0.022uF_0805_50V	X03
20	56	VGA_PM	11/22	Compal DELL	GFX_CORE support 0.9V/1.09V/1.17V	PC197, PC253 change to 330pF_0402 PR201 change to 26.1K_0402_1% PR289 change to 68.1K_0402_1% PR205 change to 49.9K_0402_1% PR209 change to 46.4K_0402_1% PR288 change to 162K_0402_1%	X03
21	48	Charger	11/30	Greg DELL	Comparator Circuit for E-Dock	PC256 change from 100pF to 0.1uF	X04
22	49	Selector	11/30	Merle DELL	PBATT back drive to Battery Slice vias charger high side MOSFET	Add PQ65 between PBATT+ and +VCHGR Use PBATT_OFF control PQ64 to switch PQ65	X04
20	56	VGA_PM	11/30	Guangyong DELL	GFX_CORE support 0.9V/1.09V/1.17V	Un-pop PC190	X04
21	57	VGA_PM	11/31	Guangyong DELL	To fix dynamic MAX8632 PGOOD drop issue.	Reserve PC257 between MAX8632 FB to GND	X04
22	43	+DC_IN	12/05	Greg DELL	PJPDC1 change to 7pin connector	PJPDC1 change to MOLEX_87437-0763_7P-T Change PC67 to 0_0402_5% and populate	X04
23	43	+DC_IN	12/07	AJ Compal	P-MOS Vgs too high	PQ61 change to FDN338P_NL	X04
25	48	Charger	12/10	Guangyong DELL	Modify Charger schematic Follow Intersil suggestion	Add PD33 BAT54CW_SOT323, +DOCK_PWR_BAR/+DC_IN_SS Reserve PR356 0_0402_5% form +SDC_IN to PU10 PIN22 Add PR354 10_0402_1% to CSSP, PR355 10_0402_1% to CSON Add PC260 0.1U_0603_25V to CSSN, PC261 0.1U_0603_25V to CSOP PC143 and PC166 change to 0.1U_0402_10V PR161 change to 100_040_5%	X04

PROPRIETARY NOTE: THIS SHEET OF ENGINEERING DRAWING AND SPECIFICATIONS CONTAINS CONFIDENTIAL TRADE SECRET AND OTHER PROPRIETARY INFORMATION OF DELL INC. ("DELL") THIS DOCUMENT MAY NOT BE TRANSFERRED OR COPIED WITHOUT THE EXPRESS WRITTEN AUTHORIZATION OF DELL. IN ADDITION, NEITHER THIS SHEET NOR THE INFORMATION IT CONTAINS WAY BE USED BY OR DISCLOSED TO ANY THIRD PARTY WITHOUT DELL'S EXPRESS WRITTEN CONSENT.

Version Change List (P. I. R. List)

Item	Page#	Title	Date	Request Owner	Issue Description	Solution Description	Rev.
26	50	Selector	12/10	AJ Compal	PBATT_OFF connect to DOCK_AC_OFF	Add PD34 RB751V-40	X04
27	57	VGA_PM	12/17	Guangyong DELL	To fix dynamic MAX8632 PGOOD drop issue.	Change PC197 form 330pF to 820pF	X04
28	47	+VCORE	12/19	Saha Compal	INTEL CPA line need adjust	PR131 change to 9.76K_0402_1%	X04
29	50	Selector	12/20	Merle DELL	Hot dock issue, adapter crowber	Add PR357 330K_0402 form +DOCK_PWR_BAR to GND. Add PQ66 RHU002N06 parallel PQ43, series PR358 0_0402 to EN_DOCK_PWR_BAR#	X04
30	48	Charger	12/21	Merle DELL	Charger Isense MOSFET timing change	PC142 change to 0.047u_0603_25V	X04
31	47	+VCORE	1/25	Guangyong DELL	Change VCORE OCSET	Change PR117 form 11.5K to 12.7K_0402_1%	X05
32	48	Charger	1/25	Guangyong DELL	Change ACAV_IN_NB pull high voltage	Add PR362 100K_0402_5% form PU11B out pull high to ISL88731_VREF De-pop PR341	X05
33	49	Selector	1/25	AJ Compal	Charger for Battery Slice	Change PQ63 to 2N7002DW Add PR360 0_0402_5% between PQ63 and SLICE_BAT_PRES	X05
34	50	Selector	2/12	Merle DELL	Fix BITS CR196131 and CR196130	Add PR363 1K_1206 and PC262 1U_0603_25V from +NBDOCK_DC_IN_SS to ground Add PD35 RB751S40T1_SOD523-2 from NB_AC_OFF# to ACAV_IN_NB	X05
35	48	Charger	2/25	Power Compal	Change Charger sunbber resistor size form 0805 to 1206.	Change PR281 from 4.7_0805 to 4.7_1206	X05
36	47/48	CPU_CORE Charger	3/6	EMI Compal	To solve CPU_CORE and Charger BB noise	Add Bead PL21 on PJP33, Pop PL12	X05
37	PWR	All power	3/6	WWAN Compal	Change all power rail snubber resistor form 0805 to 1206 size.	Change all power rail snubber resistor form 0805 to 1206 size.	X05
38	50	Seletor	3/6	Power Compal	Fix Battery slice discharge issue	Change PR260 from 240K to 620K, PR261 from 47K to 33 PQ55 from IMD2AT to 2N7002DW Add PR364 390K, PR365 390K, PD36 RB751S40T1, PC263 1U_0603.	X05
39	47	CPU_CORE	3/7	EMI Compal	To solve CPU_CORE and Charger BB noise	Add PC264 680p_0402 and PC265 470p_0402 at PL12 +PWR_SRC	X05
40	PWR	All PWR	3/17	EMI Compal	Plastic palmrest logic up BB noise solution	Pop +3.3V, +5V, +1.05V, +1.5V, +1.8V, VGA_CORE snubber R=2.2_1206 C=1000pF_0603 Pop VGH snubber R=4.7_1206 C=1000pF_0603 Change +3.3V, +1.05V, VGH, VGA_CORE and VCORE boot resistor PR37=2.2_0603 PR62=2.2_0603 PR155=2.2_0603 PR198=2.2_0603 PR87, PR98, PR121 change to 2.2_0603 Pop PC155=3300pF and PC154=220pF	X05
35	48	Charger	5/9	Elick Compal	populate ADAPT_OC function(90W setting)	Pop PR167,PR166,PR171,PR172,PC168,PC169,PC170,PC171,PC172,PR164,PR168 ,PC167,PR165,PQ33 un-pop PR170	X07

PROPRIETARY NOTE: THIS SHEET OF ENGINEERING DRAWING AND SPECIFICATIONS CONTAINS CONFIDENTIAL TRADE SECRET AND OTHER PROPRIETARY INFORMATION OF DELL INC. ("DELL") THIS DOCUMENT MAY NOT BE TRANSFERRED OR COPIED WITHOUT THE EXPRESS WRITTEN AUTHORIZATION OF DELL. IN ADDITION, NEITHER THIS SHEET NOR THE INFORMATION IT CONTAINS WAY BE USED BY OR DISCLOSED TO ANY THIRD PARTY WITHOUT DELL'S EXPRESS WRITTEN CONSENT.

Version Change List (P. I. R. List)

Item	Page#	Title	Date	Request Owner	Issue Description	Solution Description	Rev.
42	48	Charger	5/21	Merle DELL	Reduce delay time between NB adapter removal and ACAV_IN_NB de-assert from 1.6mS to~400uS.	change PC256 from .1uF to 100pF. change PR175 from 100K to 24K.	X07
43	47	V-CORE	5/21	Elick Compal	Add 33K as a reservation on pin2 of 8791 (CPU driver all 3 phases) for Maxim V_CORE solution.	Add un-pop PR366(33K 0402) between pin2 of PU6 and GND. Add un-pop PR367(33K 0402) between pin2 of PU8 and GND. Add un-pop PR368(33K 0402) between pin2 of PU9 and GND.	X07
44	43	DC-IN	6/3	Elick Compal	Glitch issue on SLICE_BAT_PRES#	Add PC266:SE074152K8L(S CER CAP 1500P 50V +-10% X7R 0402) between pin2 of PQ61 and GND.	X07
45	49	Selector	6/5	Elick Compal	Reserve a pull high resistor between +3.3V_ALW2 and SLICE_BAT_PRES#	Add un-pop PR369:SD02847018L(S RES 1/16W 4.7K +-5% 0402) between +3.3V_ALW2 and PQ40B.5.	X07
46	48	Charger	6/5	Elick Compal	un-pop ADAPT_OC function.	un-Pop PR167,PR166,PR171,PR172,PC168,PC169,PC170,PC171, PC172,PR164,PR168,PC167,PR165,PQ33 populate PR170:SD02810018L(S RES 1/16W 1K +-5% 0402)	X07
47	48	Charger	6/5	Elick Compal	Reserve a 0402 size capcitor between NB_AC_OFF# to GND	Add un-pop PC267 0402 size between PQ35.2 to GND.	X07

PROPRIETARY NOTE: THIS SHEET OF ENGINEERING DRAWING AND SPECIFICATIONS CONTAINS CONFIDENTIAL TRADE SECRET AND OTHER PROPRIETARY INFORMATION OF DELL INC. ("DELL") THIS DOCUMENT MAY NOT BE TRANSFERRED OR COPIED WITHOUT THE EXPRESS WRITTEN AUTHORIZATION OF DELL. IN ADDITION, NEITHER THIS SHEET NOR THE INFORMATION IT CONTAINS WAY BE USED BY OR DISCLOSED TO ANY THIRD PARTY WITHOUT DELL'S EXPRESS WRITTEN CONSENT.