COMPAL CONFIDENTIAL

MODEL NAME : ***BDW00***

COMPAL P/N : ***DA8DW00L100***

PCB NO : ***LA-1452***

Revision : ***1.0***

DATE :

Abacus/TangII Schematics Document

uFCBGA/uFCPGA Northwood

2002-11-26

REV: 1.0

Dell-Compal Confidential

THIS SHEET OF ENGINEERING DRAWING IS THE PROPRIETARY PROPERTY OF COMPAL ELECTRONICS, INC. AND CONTAINS CONFIDENTIAL AND TRADE SECRET INFORMATION. THIS SHEET MAY NOT BE TRANSFERED FROM THE CUSTODY OF THE COMPETENT DIVISION OF R&D DEPARTMENT EXCEPT AS AUTHORIZED BY COMPAL ELECTRONICS, INC. NEITHER THIS SHEET NOR THE INFORMATION IT CONTAINS MAY BE USED BY OR DISCLOSED TO ANY THIRD PARTY WITHOUT PRIOR WRITTEN CONSENT OF COMPAL ELECTRONICS, INC.

Compal Electronics, Inc.		
Title: Cover Sheet		
Size	Document Number: Abacus/TangII LA-1452	Rev 1.0
Date: Tuesday, November 26, 2002	Sheet 1 of 46	

Model Name : ABACUS/TangII

File Name : LA-1452

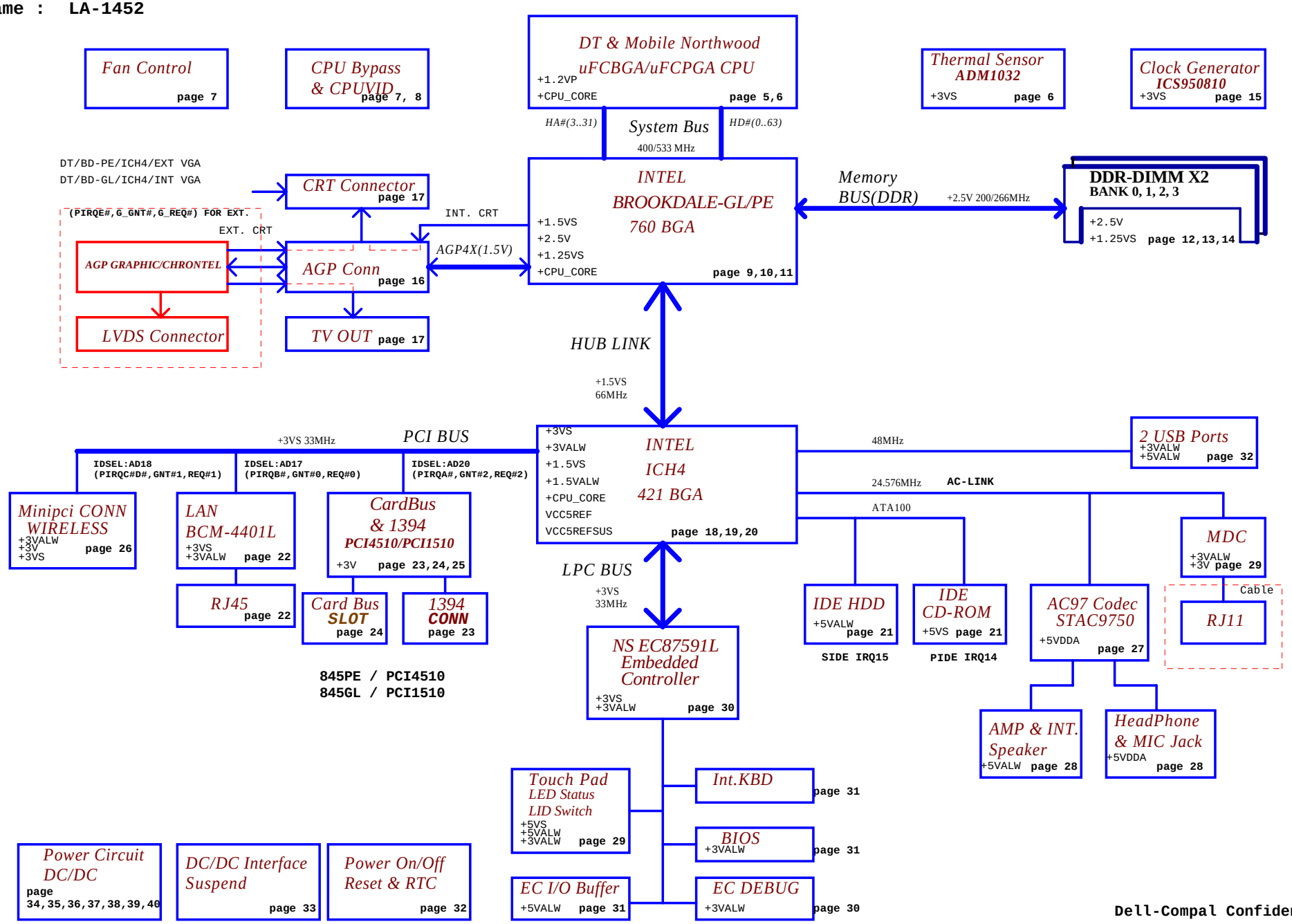

Dell-Compal Confidential

THIS SHEET OF ENGINEERING DRAWING IS THE PROPRIETARY PROPERTY OF COMPAL ELECTRONICS, INC. AND CONTAINS CONFIDENTIAL AND TRADE SECRET INFORMATION. THIS SHEET MAY NOT BE TRANSFERED FROM THE CUSTODY OF THE COMPETENT DIVISION OF R&D DEPARTMENT EXCEPT AS AUTHORIZED BY COMPAL ELECTRONICS, INC. NEITHER THIS SHEET NOR THE INFORMATION IT CONTAINS MAY BE USED BY OR DISCLOSED TO ANY THIRD PARTY WITHOUT PRIOR WRITTEN CONSENT OF COMPAL ELECTRONICS, INC.

Compal Electronics, Inc.		
Title: Block Diagram		
Size	Document Number: Abacus/TangII LA-1452	Rev 1.0
Date: Tuesday, November 26, 2002	Sheet 2 of 46	

Revision List

	Schematics Rev	PCB Rev	CHIPS Rev
SST-Build	0.1	0.1	
PT-Build	0.2	0.2	845PE Rev B0 845GL Rev B1 ICH4 Rev B0
ST-Build			
QT-Build			

Power Managment table

Signal / State	+3VALW +5VALW +12VALW	+3V +5V +2.5V	+3VS +5VS +1.5VS +1.2VP +CPU_CORE +1.25VS
S0	ON	ON	ON
S1	ON	ON	ON
S3	ON	ON	OFF
S5 S4/AC	ON	OFF	OFF
S5 S4/AC don't exist	OFF	OFF	OFF

Ceramic Capacitor Spec Guide:

Temperature Characteristics:

Symbol	0	1	2	3	4	5	6	7
CODE	Z5U	Z5V	Z5P	Y5U	Y5V	Y5P	X5R	X7R

8	9	A	B	C	D	E	F	G
NP0	C0G		BJ	CH	CJ	CK	SH	SJ

H	I	J	
UJ	UK	SL	

Tolerance:

Symbol	A	B	C	D	F	G	H	J
CODE	+-0.05PF	+-0.1PF	+-0.25PF	+-0.5PF	+-1PF	+-2%	+-3%	+-5%

K	M	N	P	Q	V	X	Z	
+-10%	+-20%	+-30%	+100,-0%	+30,-10%	+20,-10%	+40,-20%	+80,-20%	

SMBUS Control Table

	SOURCE	INVERTER	BATT	SERIAL EEPROM	THERMAL SENSOR (CPU) (U57)	THERMAL SENSOR (U25/U23)	SODIMM	CLK CHIP	MINI PCI
SMB_EC_CK1 SMB_EC_DA1	NS 87591	✓	✓	✓ (1010)	✗	✗	✗	✗	✗
SMB_EC_CK2 SMB_EC_DA2	NS 87591	✗	✗	✗	✓	✓	✗	✗	✗
SMB_CLK SMB_DATA	ICH4	✗	✗	✗	✗	✗	✓	✓	✓

NOTE1:

@XX : Depop component

1@XX : Pop for INT, Depop for EXT

2@XX : Pop for EXT, Depop for INT

Dell-Compal Confidential

THIS SHEET OF ENGINEERING DRAWING IS THE PROPRIETARY PROPERTY OF COMPAL ELECTRONICS, INC. AND CONTAINS CONFIDENTIAL AND TRADE SECRET INFORMATION. THIS SHEET MAY NOT BE TRANSFERED FROM THE CUSTODY OF THE COMPETENT DIVISION OF R&D DEPARTMENT EXCEPT AS AUTHORIZED BY COMPAL ELECTRONICS, INC. NEITHER THIS SHEET NOR THE INFORMATION IT CONTAINS MAY BE USED BY OR DISCLOSED TO ANY THIRD PARTY WITHOUT PRIOR WRITTEN CONSENT OF COMPAL ELECTRONICS, INC.

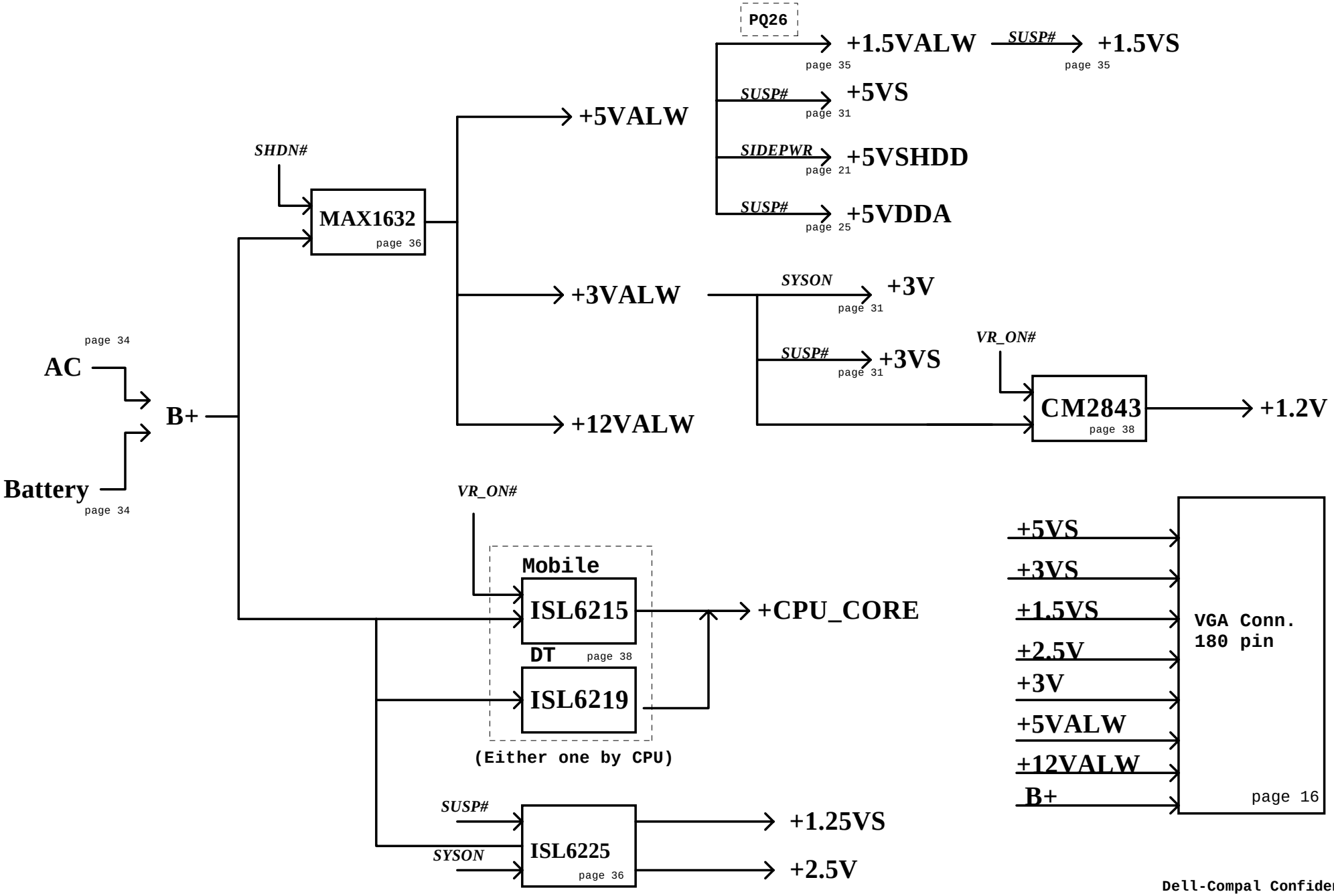

Dell-Compal Confidential

THIS SHEET OF ENGINEERING DRAWING IS THE PROPRIETARY PROPERTY OF COMPAL ELECTRONICS, INC. AND CONTAINS CONFIDENTIAL AND TRADE SECRET INFORMATION. THIS SHEET MAY NOT BE TRANSFERED FROM THE CUSTODY OF THE COMPETENT DIVISION OF R&D DEPARTMENT EXCEPT AS AUTHORIZED BY COMPAL ELECTRONICS, INC. NEITHER THIS SHEET NOR THE INFORMATION IT CONTAINS

Compal Electronics, Inc.		
Title: POWER DIAGRAM		
Size	Document Number: Abacus/TangII LA-1452	Rev 1.0
Date: Tuesday, November 26, 2002	Sheet 4 of 46	

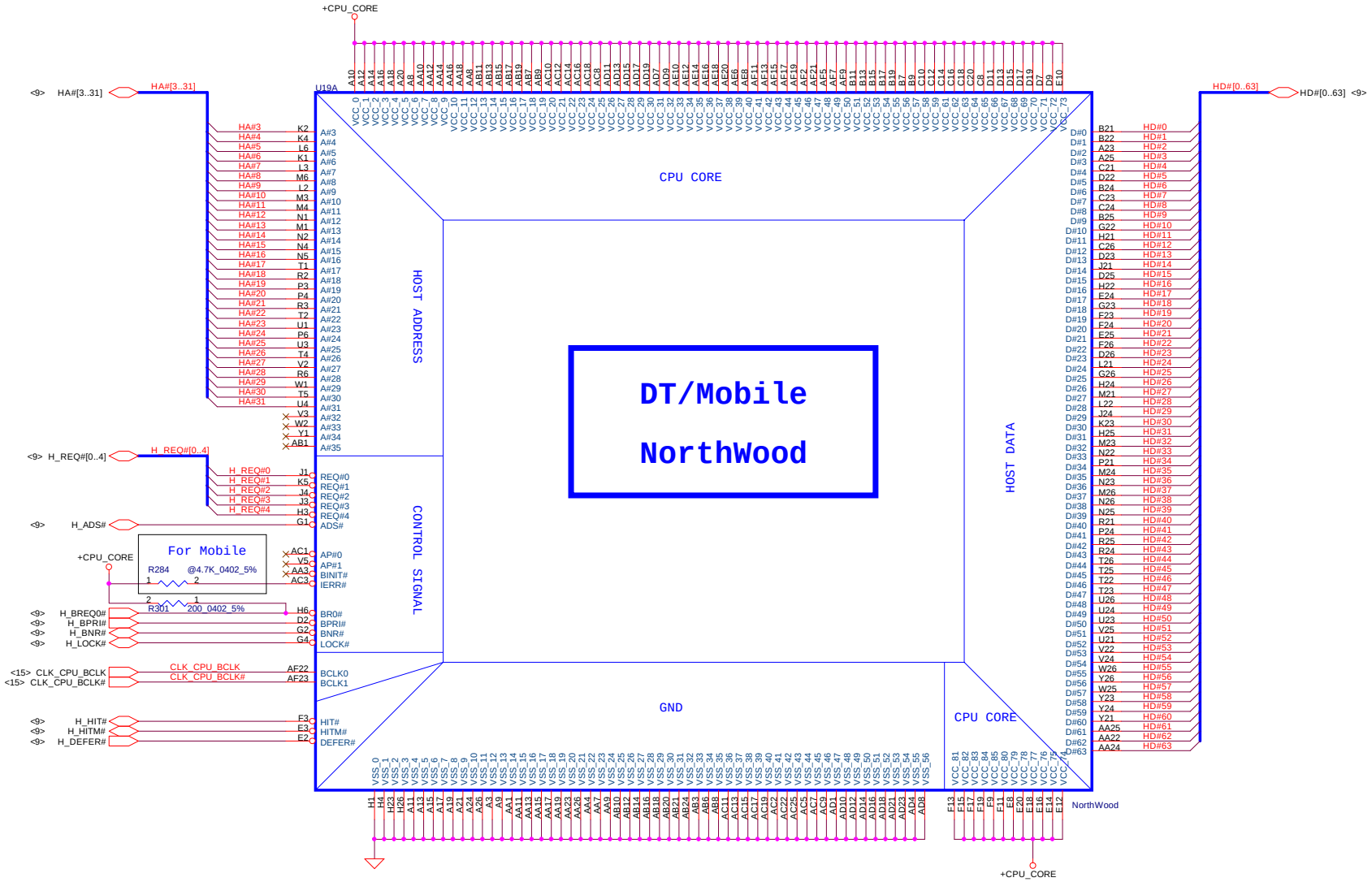

Dell-Compal Confidential

Compal Electronics, Inc.

Title: Northwood / P4 uFCPGA (1/2)

Size: Custom | Document Number: Abacus/TangII LA-1452 | Rev. 1.0

Date: Tuesday, November 26, 2002 | Sheet 5 of 46

THIS SHEET OF ENGINEERING DRAWING IS THE PROPRIETARY PROPERTY OF COMPAL ELECTRONICS, INC. AND CONTAINS CONFIDENTIAL AND TRADE SECRET INFORMATION. THIS SHEET MAY NOT BE TRANSFERED FROM THE CUSTODY OF THE COMPETENT DIVISION OF R&D DEPARTMENT EXCEPT AS AUTHORIZED BY COMPAL ELECTRONICS, INC. NEITHER THIS SHEET NOR THE INFORMATION IT CONTAINS MAY BE USED BY OR DISCLOSED TO ANY THIRD PARTY WITHOUT PRIOR WRITTEN CONSENT OF COMPAL ELECTRONICS, INC.

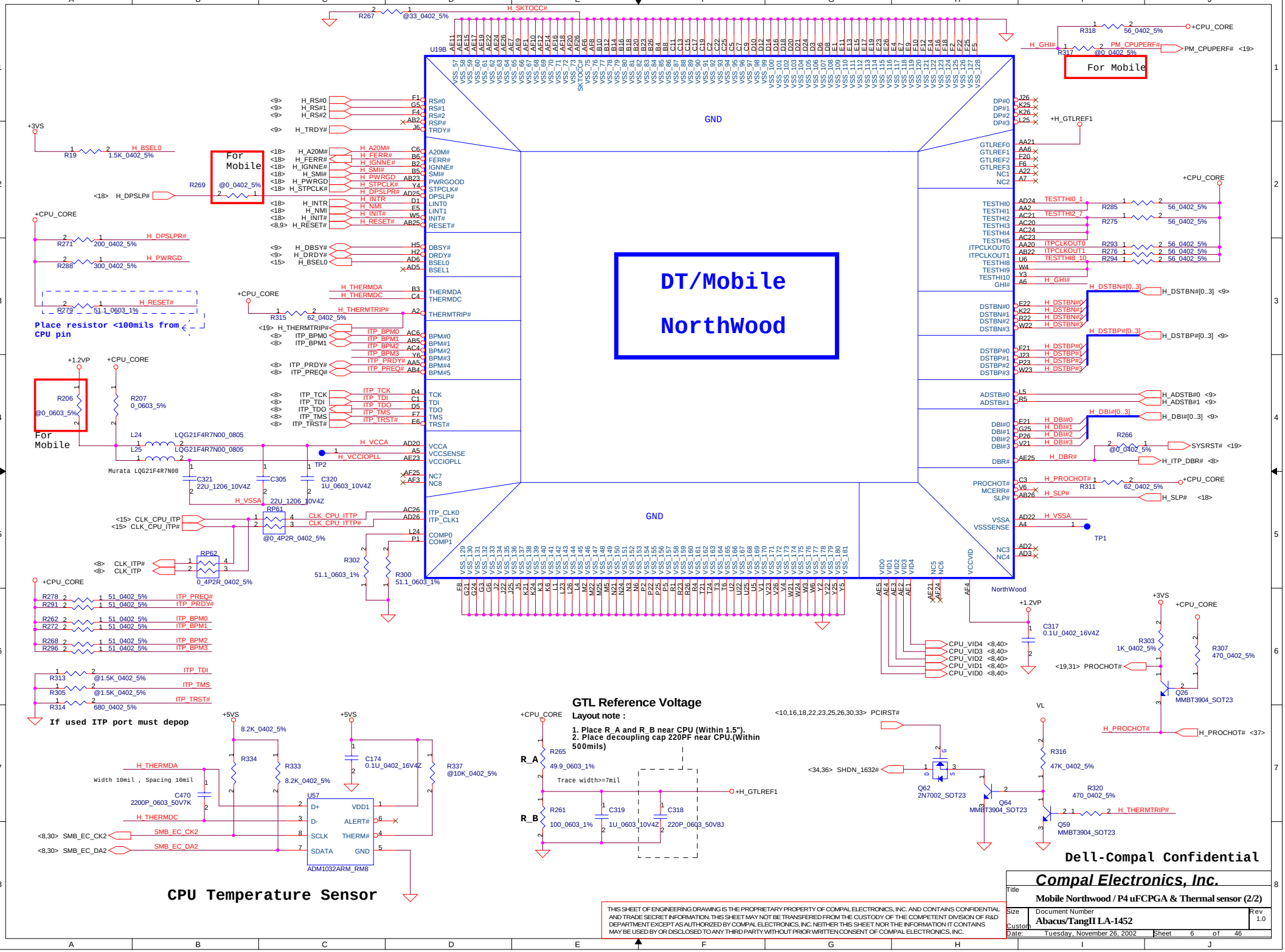

THIS SHEET OF ENGINEERING DRAWING IS THE PROPRIETARY PROPERTY OF COMPAL ELECTRONICS, INC. AND CONTAINS CONFIDENTIAL AND TRADE SECRET INFORMATION. THIS SHEET MAY NOT BE TRANSFERED FROM THE CUSTODY OF THE COMPETENT DIVISION OF R&D DEPARTMENT EXCEPT AS AUTHORIZED BY COMPAL ELECTRONICS, INC. NEITHER THIS SHEET NOR THE INFORMATION IT CONTAINS MAY BE USED BY OR DISCLOSED TO ANY THIRD PARTY WITHOUT PRIOR WRITTEN CONSENT OF COMPAL ELECTRONICS, INC.

Layout note :

Place close to CPU, Use 2~3 vias per PAD.
Place .22uF caps underneath balls on solder side.
Place 10uF caps on the peripheral near balls.
Use 2~3 vias per PAD.

Please place these cap in the socket cavity area

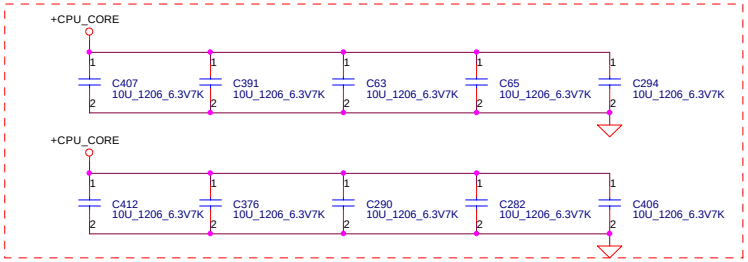

Please place these cap on the socket north side

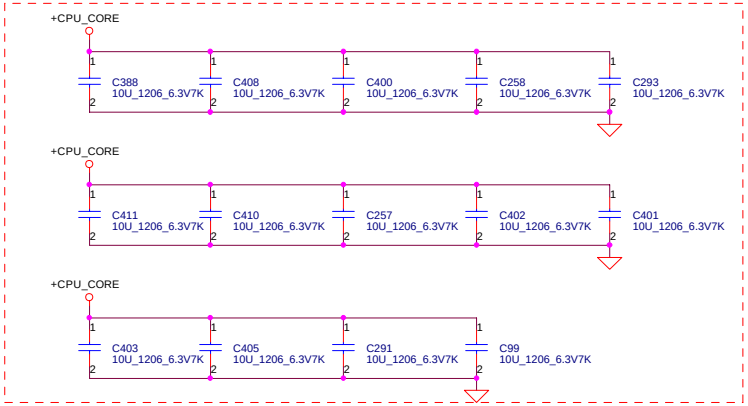

Please place these cap on the socket south side

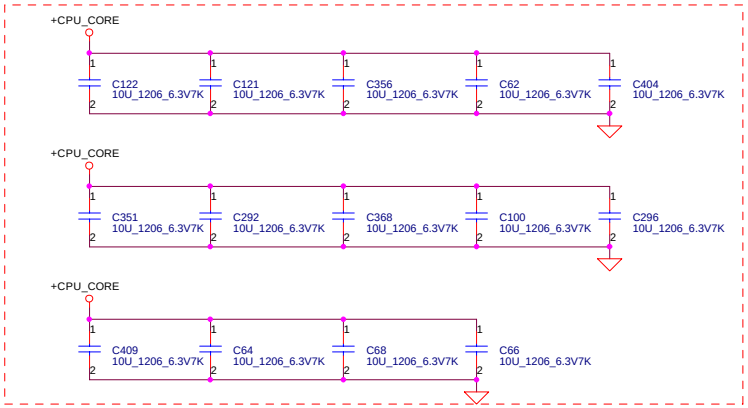

Layout note :

Place close to CPU power and ground pin as possible (<1inch)

For Desktop's CPU:

ESR total=0.75m ohm
C total=6350uF

For Mobile's CPU:

ESR total=1.875m ohm
C total=2590uF

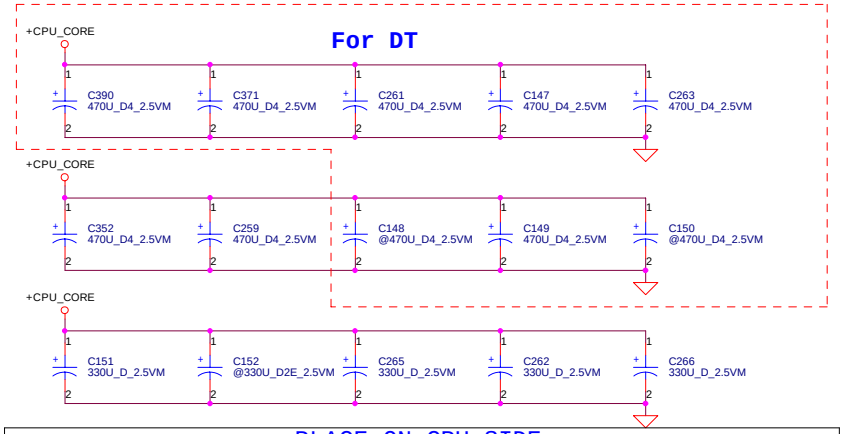

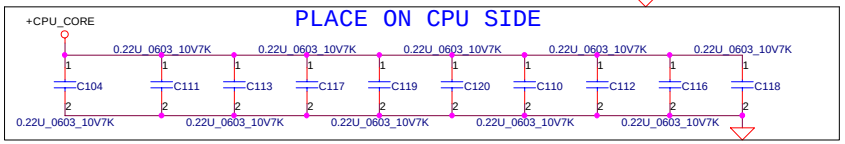

Fan1 Control circuit

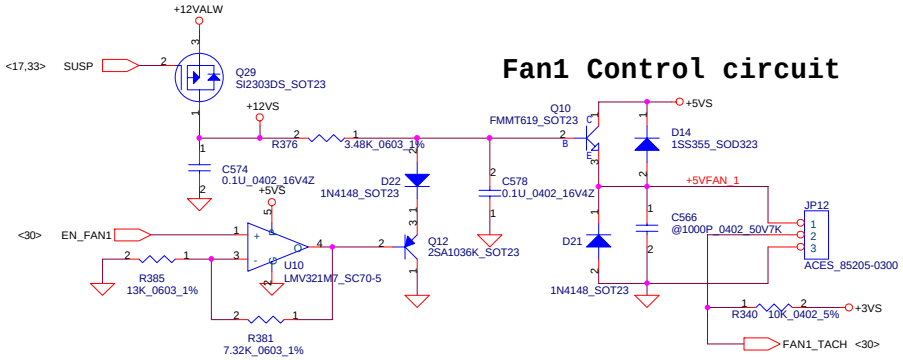

Fan2 Control circuit

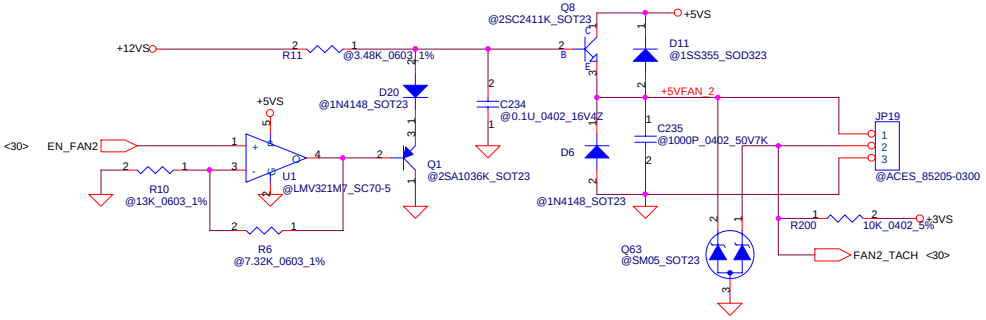

Dell-Compal Confidential

THIS SHEET OF ENGINEERING DRAWING IS THE PROPRIETARY PROPERTY OF COMPAL ELECTRONICS, INC. AND CONTAINS CONFIDENTIAL AND TRADE SECRET INFORMATION. THIS SHEET MAY NOT BE TRANSFERED FROM THE CUSTODY OF THE COMPETENT DIVISION OF R&D DEPARTMENT EXCEPT AS AUTHORIZED BY COMPAL ELECTRONICS, INC. NEITHER THIS SHEET NOR THE INFORMATION IT CONTAINS MAY BE USED BY OR DISCLOSED TO ANY THIRD PARTY WITHOUT PRIOR WRITTEN CONSENT OF COMPAL ELECTRONICS, INC.

Compal Electronics, Inc.		
Title	CPU Decoupling CAP. & Fan control	
Size: Custom	Document Number: Abacus/TangII LA-1452	Rev: 1.0
Date: Tuesday, November 26, 2002	Sheet 7 of 46	

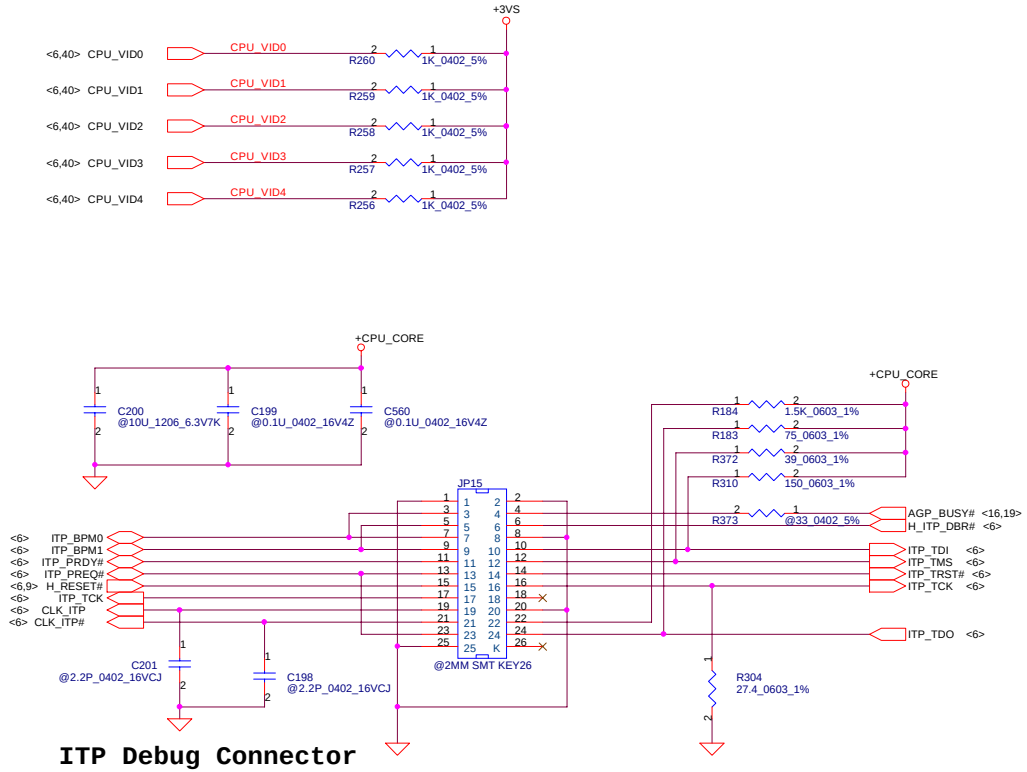

ITP Debug Connector

	Mobile CPU					Desktop CPU				
MO/DT_CPU	1					0				
VID / VCC	4	3	2	1	0	4	3	2	1	0
1.750V	0	0	0	0	0	0	0	1	0	0
1.700V	0	0	0	0	1	0	0	1	1	0
1.650V	0	0	0	1	0	0	1	0	0	0
1.600V	0	0	0	1	1	0	1	0	1	0
1.550V	0	0	1	0	0	0	1	1	0	0
1.500V	0	0	1	0	1	0	1	1	1	0
1.450V	0	0	1	1	0	1	0	0	0	0
1.400V	0	0	1	1	1	1	0	0	1	0
1.350V	0	1	0	0	0	1	0	1	0	0
1.300V	0	1	0	0	1	1	0	1	1	0
1.250V	0	1	0	1	0	1	1	0	0	0
1.200V	0	1	0	1	1	1	1	0	1	0
1.150V	0	1	1	0	0	1	1	1	0	0
1.100V	0	1	1	0	1	1	1	1	1	0
1.050V	0	1	1	1	0	X	X	X	X	X
1.000V	0	1	1	1	1	X	X	X	X	X
0.975V	1	0	0	0	0	X	X	X	X	X
0.950V	1	0	0	0	1	X	X	X	X	X
0.925V	1	0	0	1	0	X	X	X	X	X
0.900V	1	0	0	1	1	X	X	X	X	X
0.875V	1	0	1	0	0	X	X	X	X	X
0.850V	1	0	1	0	1	X	X	X	X	X
0.825V	1	0	1	1	0	X	X	X	X	X
0.800V	1	0	1	1	1	X	X	X	X	X
0.775V	1	1	0	0	0	X	X	X	X	X
0.750V	1	1	0	0	1	X	X	X	X	X
0.725V	1	1	0	1	0	X	X	X	X	X
0.700V	1	1	0	1	1	X	X	X	X	X
0.675V	1	1	1	0	0	X	X	X	X	X
0.650V	1	1	1	0	1	X	X	X	X	X
0.625V	1	1	1	1	0	X	X	X	X	X
0.600V	1	1	1	1	1	X	X	X	X	X
VRM output off						1	1	1	1	1

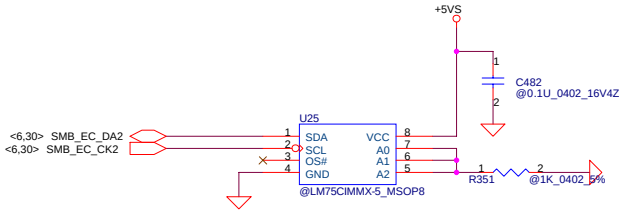

Address:1001_000X

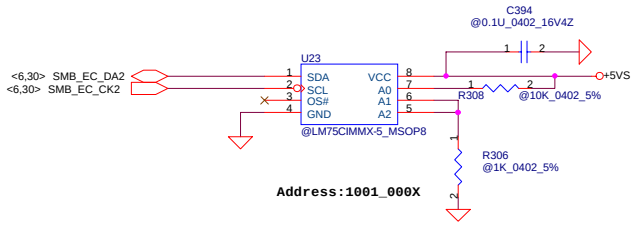

Address:1001_000X

Dell-Compal Confidential

COMPAL Electronics, Inc.

Title: **CPU VID & ITP PORT**

Size: Custom | Document Number: **Abacus/TangII LA-1452** | Rev: 1.0

Date: Tuesday, November 26, 2002 | Sheet 8 of 46

THIS SHEET OF ENGINEERING DRAWING IS THE PROPRIETARY PROPERTY OF COMPAL ELECTRONICS, INC. AND CONTAINS CONFIDENTIAL AND TRADE SECRET INFORMATION. THIS SHEET MAY NOT BE TRANSFERED FROM THE CUSTODY OF THE COMPETENT DIVISION OF R&D DEPARTMENT EXCEPT AS AUTHORIZED BY COMPAL ELECTRONICS, INC. NEITHER THIS SHEET NOR THE INFORMATION IT CONTAINS MAY BE USED BY OR DISCLOSED TO ANY THIRD PARTY WITHOUT PRIOR WRITTEN CONSENT OF COMPAL ELECTRONICS, INC.

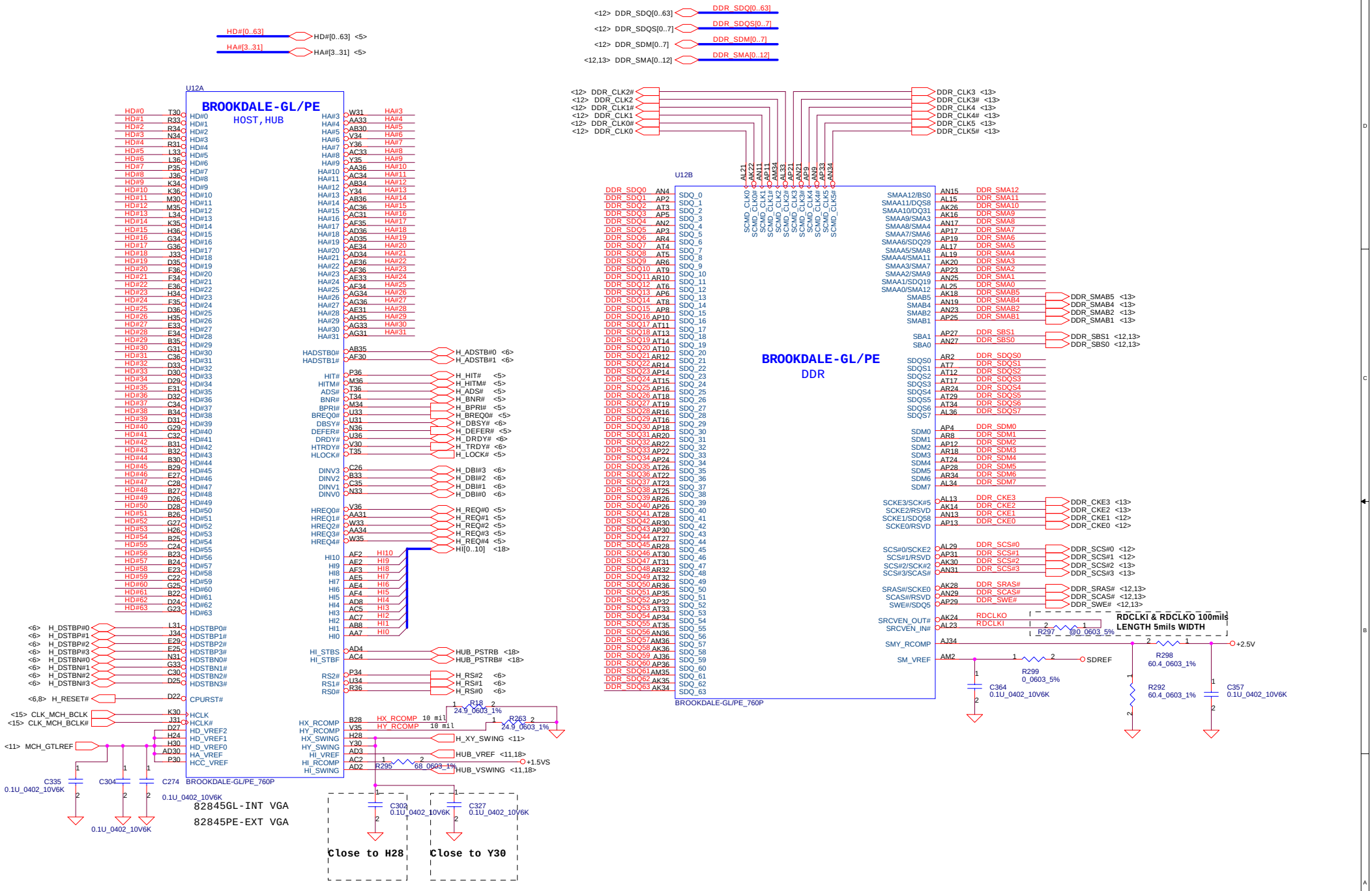

Layout note :
1. HX_RCOMP, HY_RCOMP Trace width 10 mil.
2. Terminator Max 500 mil.

Dell-Compal Confidential

Compal Electronics, Inc.

Title: BROOKDALE-GL/PE (1/3)

Size: | Document Number: Abacus/TangII LA-1452 | Rev: 1.0

Date: Tuesday, November 26, 2002 | Sheet 9 of 46

THIS SHEET OF ENGINEERING DRAWING IS THE PROPRIETARY PROPERTY OF COMPAL ELECTRONICS, INC. AND CONTAINS CONFIDENTIAL AND TRADE SECRET INFORMATION. THIS SHEET MAY NOT BE TRANSFERED FROM THE CUSTODY OF THE COMPETENT DIVISION OF R&D DEPARTMENT EXCEPT AS AUTHORIZED BY COMPAL ELECTRONICS, INC. NEITHER THIS SHEET NOR THE INFORMATION IT CONTAINS MAY BE USED BY OR DISCLOSED TO ANY THIRD PARTY WITHOUT PRIOR WRITTEN CONSENT OF COMPAL ELECTRONICS, INC.

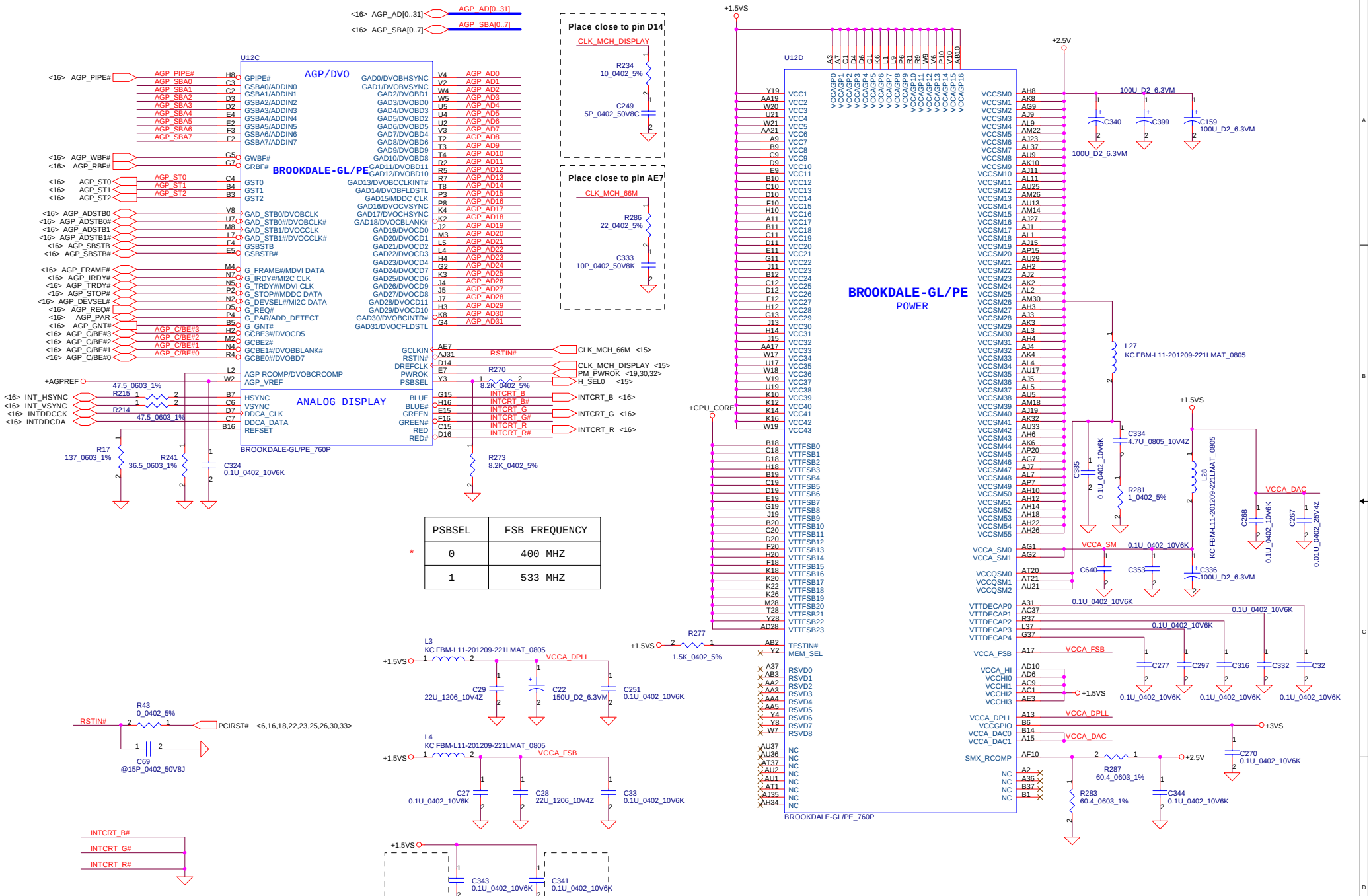

PSBSEL	FSB FREQUENCY
0	400 MHZ
1	533 MHZ

*

Dell-Compal Confidential

Compal Electronics, Inc.

Title: BROOKDALE-GL/PE (2/3)

Size: | Document Number: Abacus/TangII LA-1452 | Rev: 1.0

Date: Tuesday, November 26, 2002 | Sheet 10 of 46

THIS SHEET OF ENGINEERING DRAWING IS THE PROPRIETARY PROPERTY OF COMPAL ELECTRONICS, INC. AND CONTAINS CONFIDENTIAL AND TRADE SECRET INFORMATION. THIS SHEET MAY NOT BE TRANSFERED FROM THE CUSTODY OF THE COMPETENT DIVISION OF R&D DEPARTMENT EXCEPT AS AUTHORIZED BY COMPAL ELECTRONICS, INC. NEITHER THIS SHEET NOR THE INFORMATION IT CONTAINS MAY BE USED BY OR DISCLOSED TO ANY THIRD PARTY WITHOUT PRIOR WRITTEN CONSENT OF COMPAL ELECTRONICS, INC.

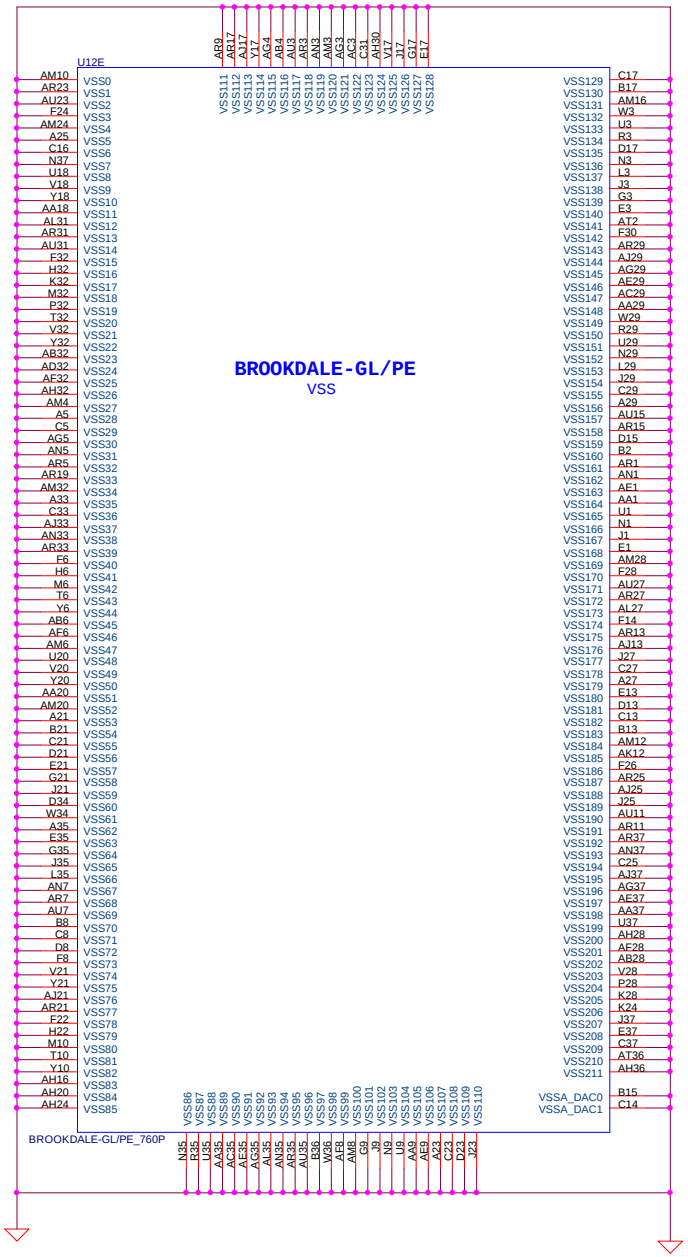

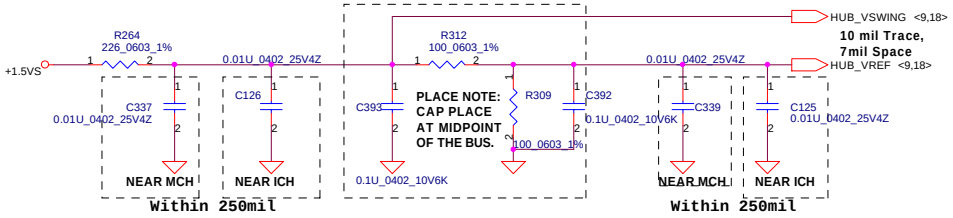

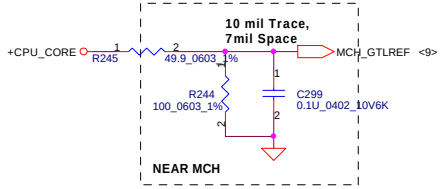

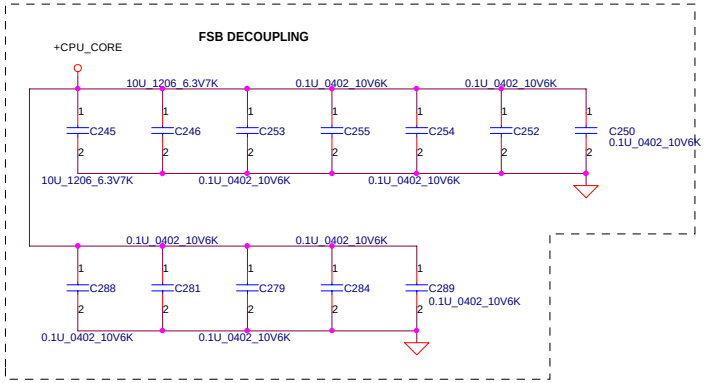

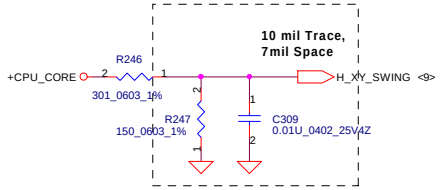

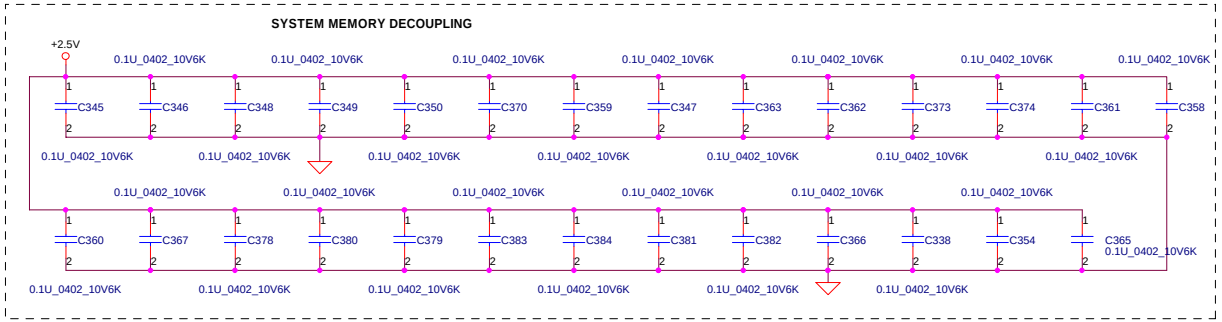

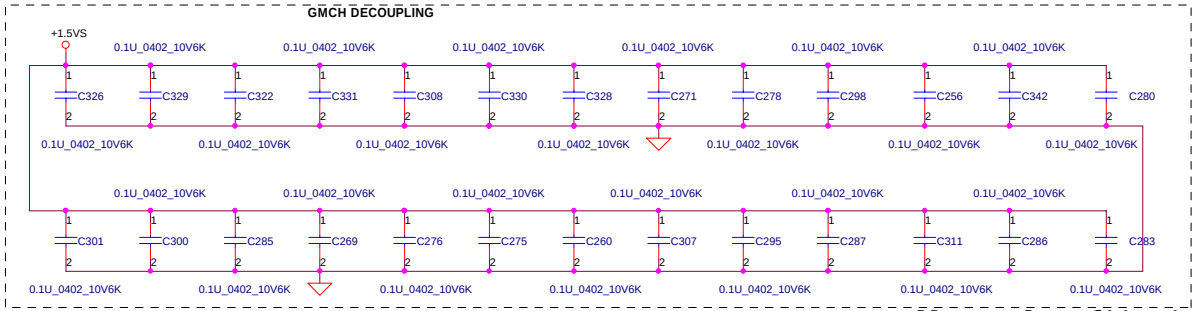

Dell-Compal Confidential

Compal Electronics, Inc.		
Title: BROOKDALE-GL/PE (3/3)		
Size	Document Number: Abacus/TangII LA-1452	Rev 1.0
Date: Tuesday, November 26, 2002	Sheet 11 of 46	

THIS SHEET OF ENGINEERING DRAWING IS THE PROPRIETARY PROPERTY OF COMPAL ELECTRONICS, INC. AND CONTAINS CONFIDENTIAL AND TRADE SECRET INFORMATION. THIS SHEET MAY NOT BE TRANSFERED FROM THE CUSTODY OF THE COMPETENT DIVISION OF R&D DEPARTMENT EXCEPT AS AUTHORIZED BY COMPAL ELECTRONICS, INC. NEITHER THIS SHEET NOR THE INFORMATION IT CONTAINS MAY BE USED BY OR DISCLOSED TO ANY THIRD PARTY WITHOUT PRIOR WRITTEN CONSENT OF COMPAL ELECTRONICS, INC.

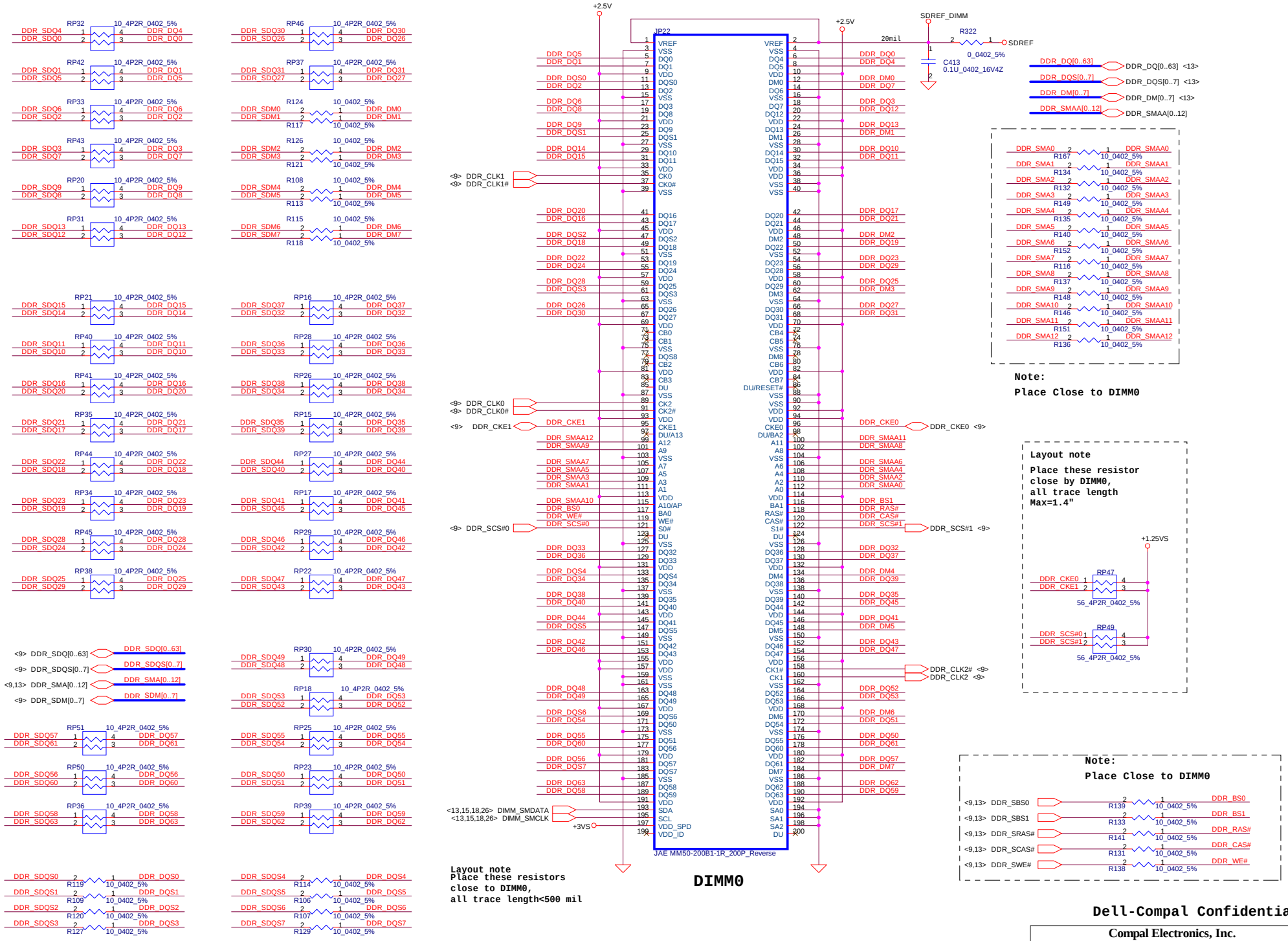

Dell-Compal Confidential

Compal Electronics, Inc.

Title: DDR-SODIMM SLOT0

Size | Document Number: Abacus/TangII LA-1452 | Rev: 1.0

Date: Tuesday, November 26, 2002 | Sheet 12 of 46

THIS SHEET OF ENGINEERING DRAWING IS THE PROPRIETARY PROPERTY OF COMPAL ELECTRONICS, INC. AND CONTAINS CONFIDENTIAL AND TRADE SECRET INFORMATION. THIS SHEET MAY NOT BE TRANSFERED FROM THE CUSTODY OF THE COMPETENT DIVISION OF R&D DEPARTMENT EXCEPT AS AUTHORIZED BY COMPAL ELECTRONICS, INC. NEITHER THIS SHEET NOR THE INFORMATION IT CONTAINS MAY BE USED BY OR DISCLOSED TO ANY THIRD PARTY WITHOUT PRIOR WRITTEN CONSENT OF COMPAL ELECTRONICS, INC.

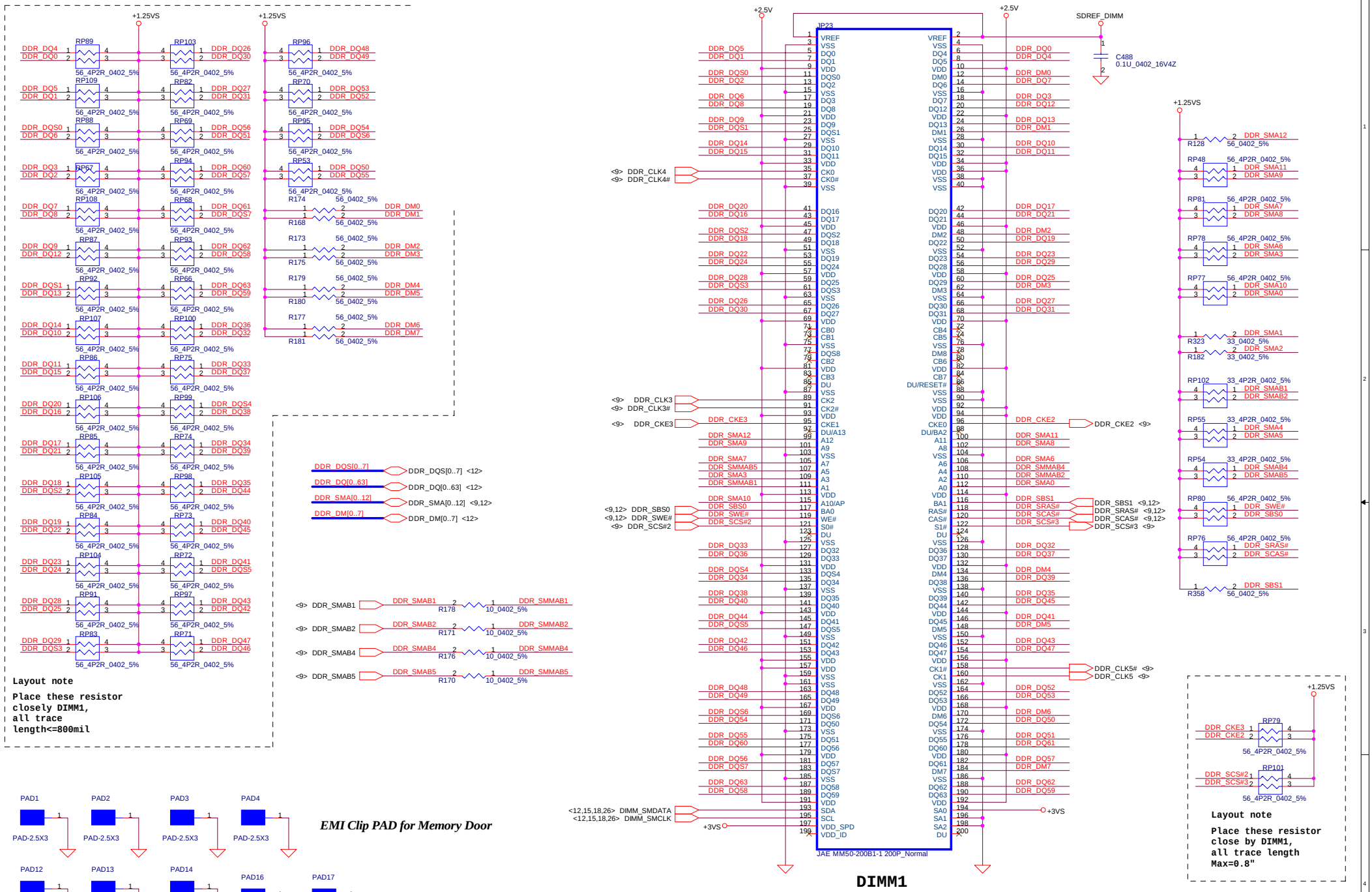

EMI Clip PAD for Memory Door

Dell-Compal Confidential

Compal Electronics, Inc.	
Title	DDR-SODIMM SLOT1
Size	Document Number: Abacus/TangII LA-1452 — Rev 1.0
Date: Tuesday, November 26, 2002	Sheet 13 of 46

THIS SHEET OF ENGINEERING DRAWING IS THE PROPRIETARY PROPERTY OF COMPAL ELECTRONICS, INC. AND CONTAINS CONFIDENTIAL AND TRADE SECRET INFORMATION. THIS SHEET MAY NOT BE TRANSFERED FROM THE CUSTODY OF THE COMPETENT DIVISION OF R&D DEPARTMENT EXCEPT AS AUTHORIZED BY COMPAL ELECTRONICS, INC. NEITHER THIS SHEET NOR THE INFORMATION IT CONTAINS MAY BE USED BY OR DISCLOSED TO ANY THIRD PARTY WITHOUT PRIOR WRITTEN CONSENT OF COMPAL ELECTRONICS, INC.

Layout note :

Distribute as close as possible to DDR-SODIMM0.

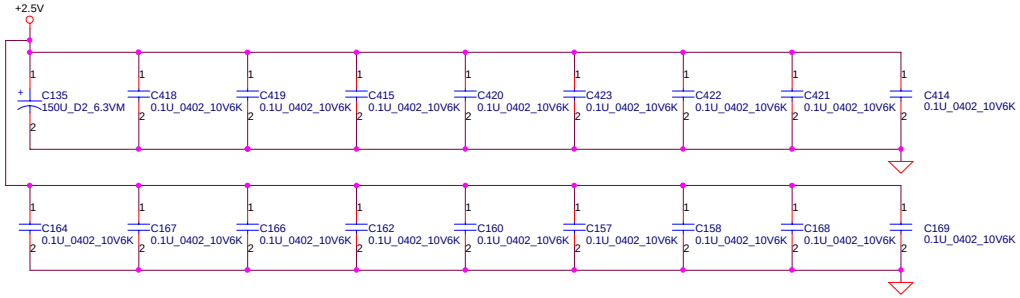

Layout note :

Distribute as close as possible to DDR-SODIMM1.

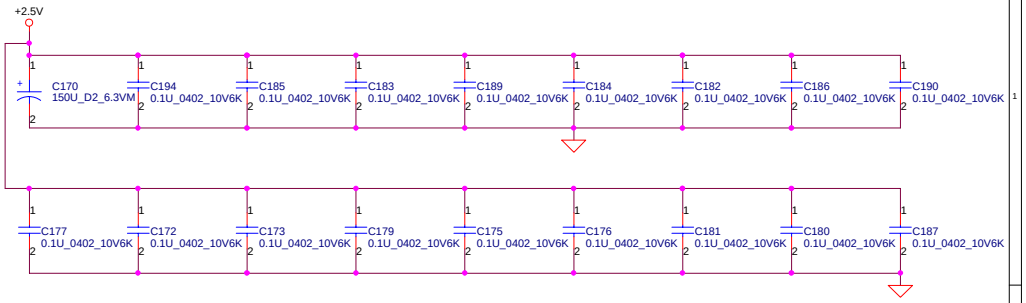

Layout note :

Place one cap close to every 2 pull up resistors termination to +1.25VS

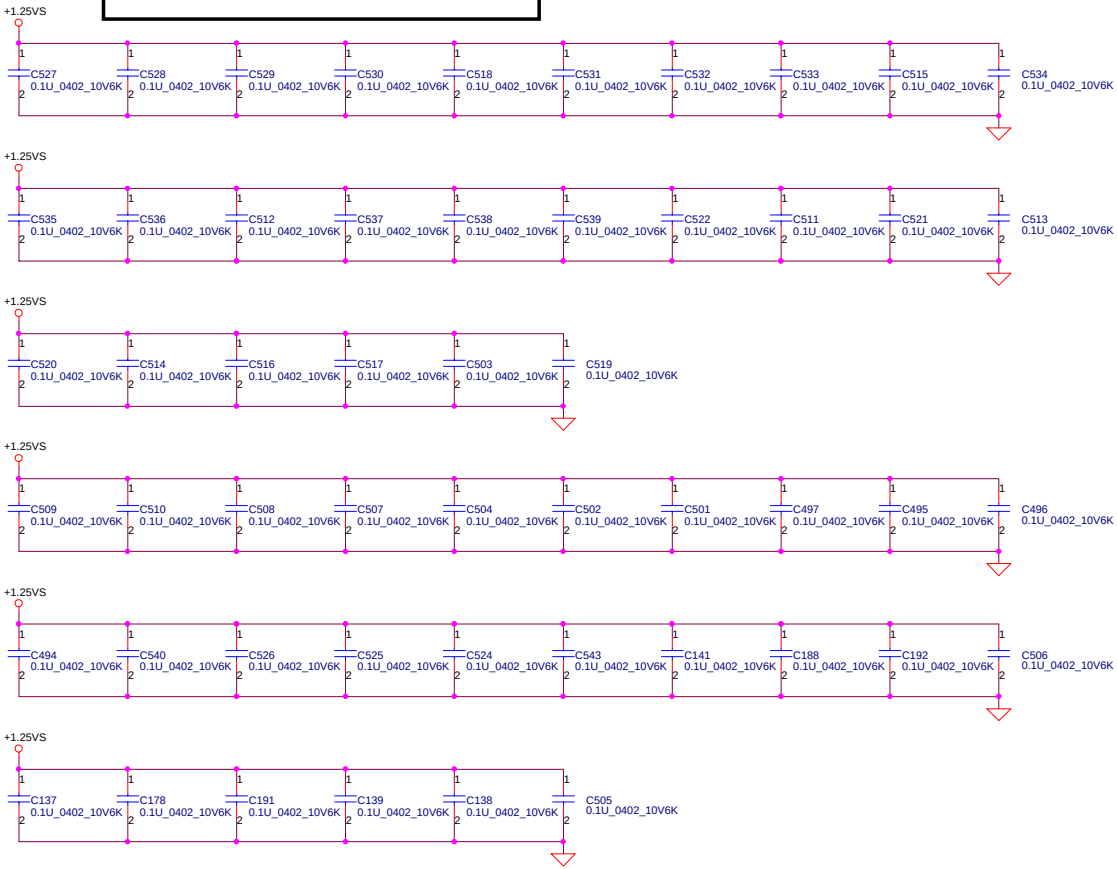

Dell-Compal Confidential

THIS SHEET OF ENGINEERING DRAWING IS THE PROPRIETARY PROPERTY OF COMPAL ELECTRONICS, INC. AND CONTAINS CONFIDENTIAL AND TRADE SECRET INFORMATION. THIS SHEET MAY NOT BE TRANSFERED FROM THE CUSTODY OF THE COMPETENT DIVISION OF R&D DEPARTMENT EXCEPT AS AUTHORIZED BY COMPAL ELECTRONICS, INC. NEITHER THIS SHEET NOR THE INFORMATION IT CONTAINS MAY BE USED BY OR DISCLOSED TO ANY THIRD PARTY WITHOUT PRIOR WRITTEN CONSENT OF COMPAL ELECTRONICS, INC.

Compal Electronics, Inc.		
Title: DDR SODIMM Decoupling		
Size	Document Number: Abacus/TangII LA-1452	Rev 1.0
Date: Tuesday, November 26, 2002	Sheet 14 of 46	

Clock Generator

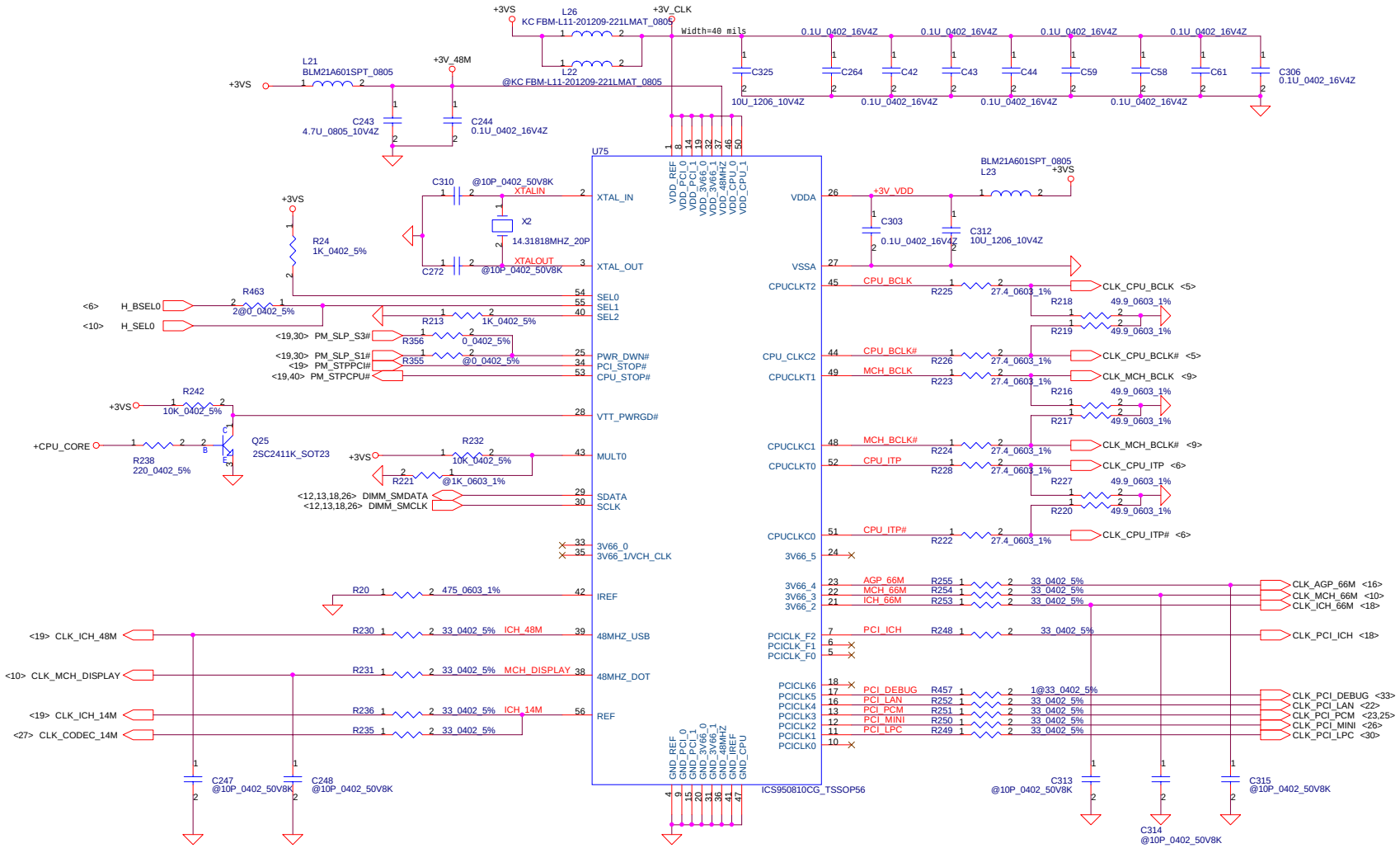

CPU Frequency Select Table

	SEL[2:0]	CK-408 Speed
	001	100 MHZ
*	011	133 MHZ

Dell-Compal Confidential

THIS SHEET OF ENGINEERING DRAWING IS THE PROPRIETARY PROPERTY OF COMPAL ELECTRONICS, INC. AND CONTAINS CONFIDENTIAL AND TRADE SECRET INFORMATION. THIS SHEET MAY NOT BE TRANSFERED FROM THE CUSTODY OF THE COMPETENT DIVISION OF R&D DEPARTMENT EXCEPT AS AUTHORIZED BY COMPAL ELECTRONICS, INC. NEITHER THIS SHEET NOR THE INFORMATION IT CONTAINS MAY BE USED BY OR DISCLOSED TO ANY THIRD PARTY WITHOUT PRIOR WRITTEN CONSENT OF COMPAL ELECTRONICS, INC.

Compal Electronics, Inc.	
Title	Clock Generator
Size	Document Number: Abacus/TangII LA-1452 — Rev 1.0
Date: Tuesday, November 26, 2002	Sheet 15 of 46

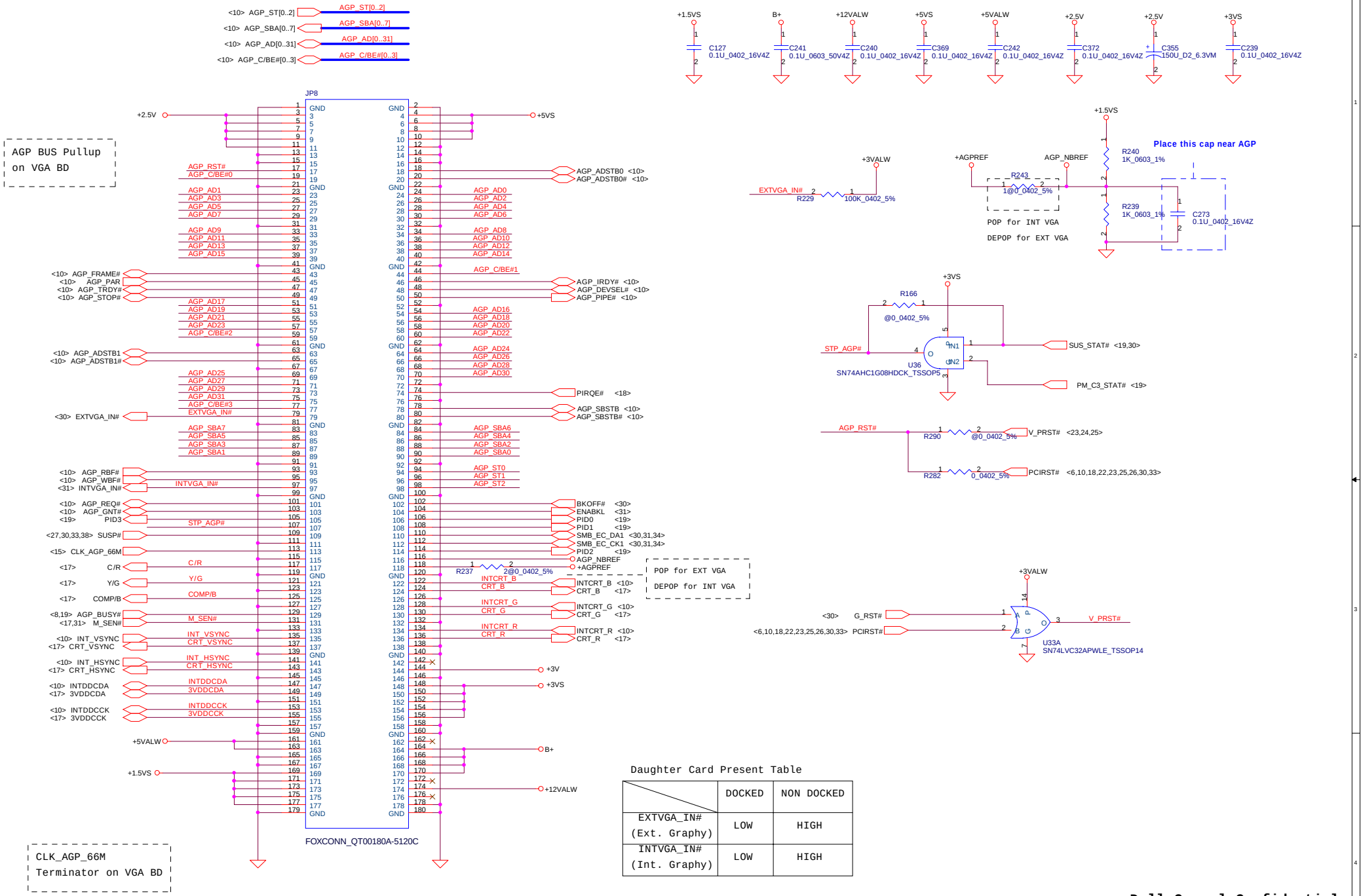

Daughter Card Present Table

	DOCKED	NON DOCKED
EXTVGA_IN# (Ext. Graphy)	LOW	HIGH
INTVGA_IN# (Int. Graphy)	LOW	HIGH

Dell-Compal Confidential

Compal Electronics, Inc.

Title: AGP Conn.

Size: | Document Number: Abacus/TangII LA-1452 | Rev: 1.0

Date: Tuesday, November 26, 2002 | Sheet 16 of 46

THIS SHEET OF ENGINEERING DRAWING IS THE PROPRIETARY PROPERTY OF COMPAL ELECTRONICS, INC. AND CONTAINS CONFIDENTIAL AND TRADE SECRET INFORMATION. THIS SHEET MAY NOT BE TRANSFERED FROM THE CUSTODY OF THE COMPETENT DIVISION OF R&D DEPARTMENT EXCEPT AS AUTHORIZED BY COMPAL ELECTRONICS, INC. NEITHER THIS SHEET NOR THE INFORMATION IT CONTAINS MAY BE USED BY OR DISCLOSED TO ANY THIRD PARTY WITHOUT PRIOR WRITTEN CONSENT OF COMPAL ELECTRONICS, INC.

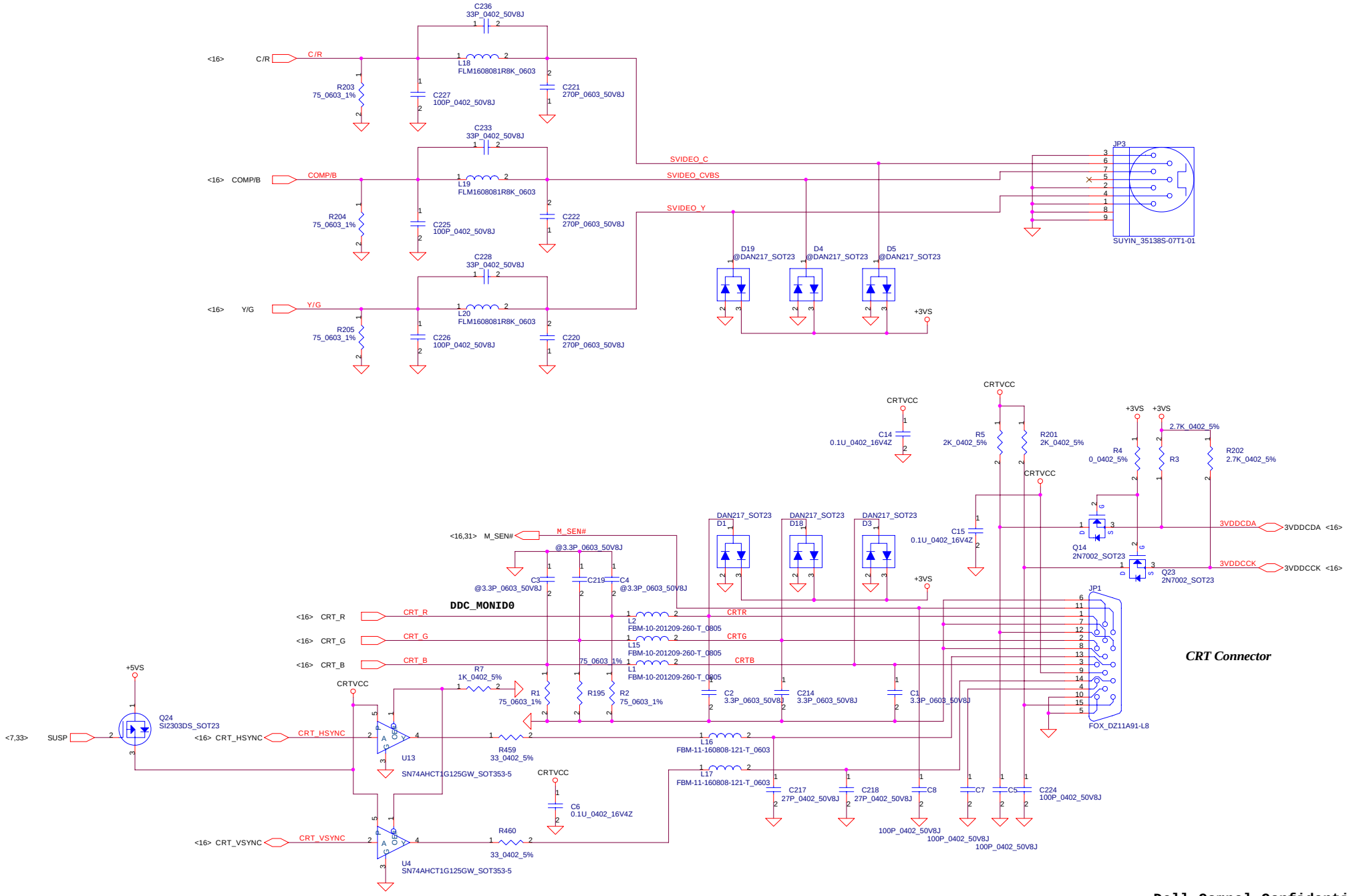

Dell-Compal Confidential

Compal Electronics, Inc.

Title: **TV OUT & CRT**

Size | Document Number: **Abacus/TangII LA-1452** | Rev: 1.0

Date: Tuesday, November 26, 2002 | Sheet 17 of 46

THIS SHEET OF ENGINEERING DRAWING IS THE PROPRIETARY PROPERTY OF COMPAL ELECTRONICS, INC. AND CONTAINS CONFIDENTIAL AND TRADE SECRET INFORMATION. THIS SHEET MAY NOT BE TRANSFERED FROM THE CUSTODY OF THE COMPETENT DIVISION OF R&D DEPARTMENT EXCEPT AS AUTHORIZED BY COMPAL ELECTRONICS, INC. NEITHER THIS SHEET NOR THE INFORMATION IT CONTAINS MAY BE USED BY OR DISCLOSED TO ANY THIRD PARTY WITHOUT PRIOR WRITTEN CONSENT OF COMPAL ELECTRONICS, INC.

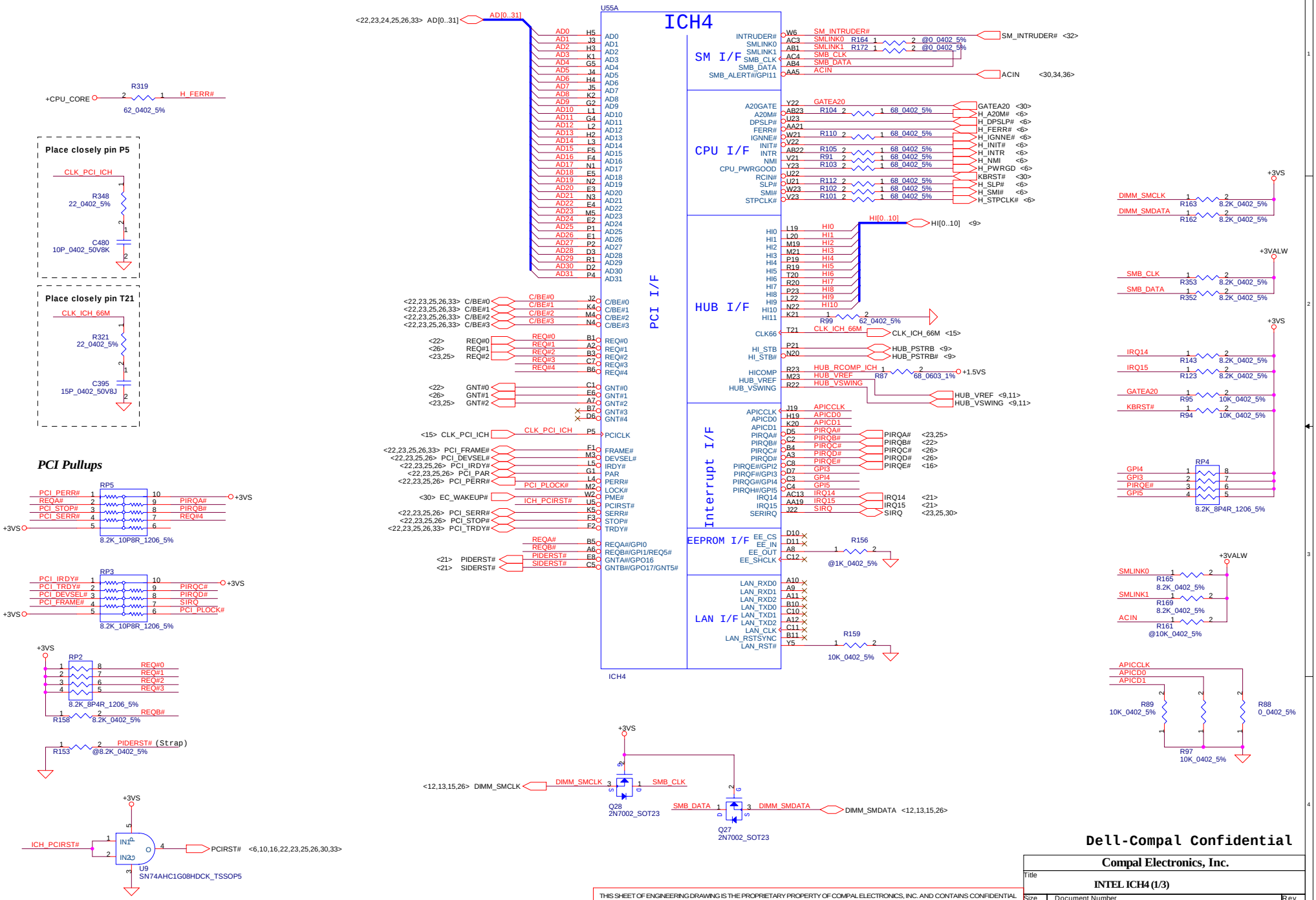

THIS SHEET OF ENGINEERING DRAWING IS THE PROPRIETARY PROPERTY OF COMPAL ELECTRONICS, INC. AND CONTAINS CONFIDENTIAL AND TRADE SECRET INFORMATION. THIS SHEET MAY NOT BE TRANSFERED FROM THE CUSTODY OF THE COMPETENT DIVISION OF R&D DEPARTMENT EXCEPT AS AUTHORIZED BY COMPAL ELECTRONICS, INC. NEITHER THIS SHEET NOR THE INFORMATION IT CONTAINS MAY BE USED BY OR DISCLOSED TO ANY THIRD PARTY WITHOUT PRIOR WRITTEN CONSENT OF COMPAL ELECTRONICS, INC.

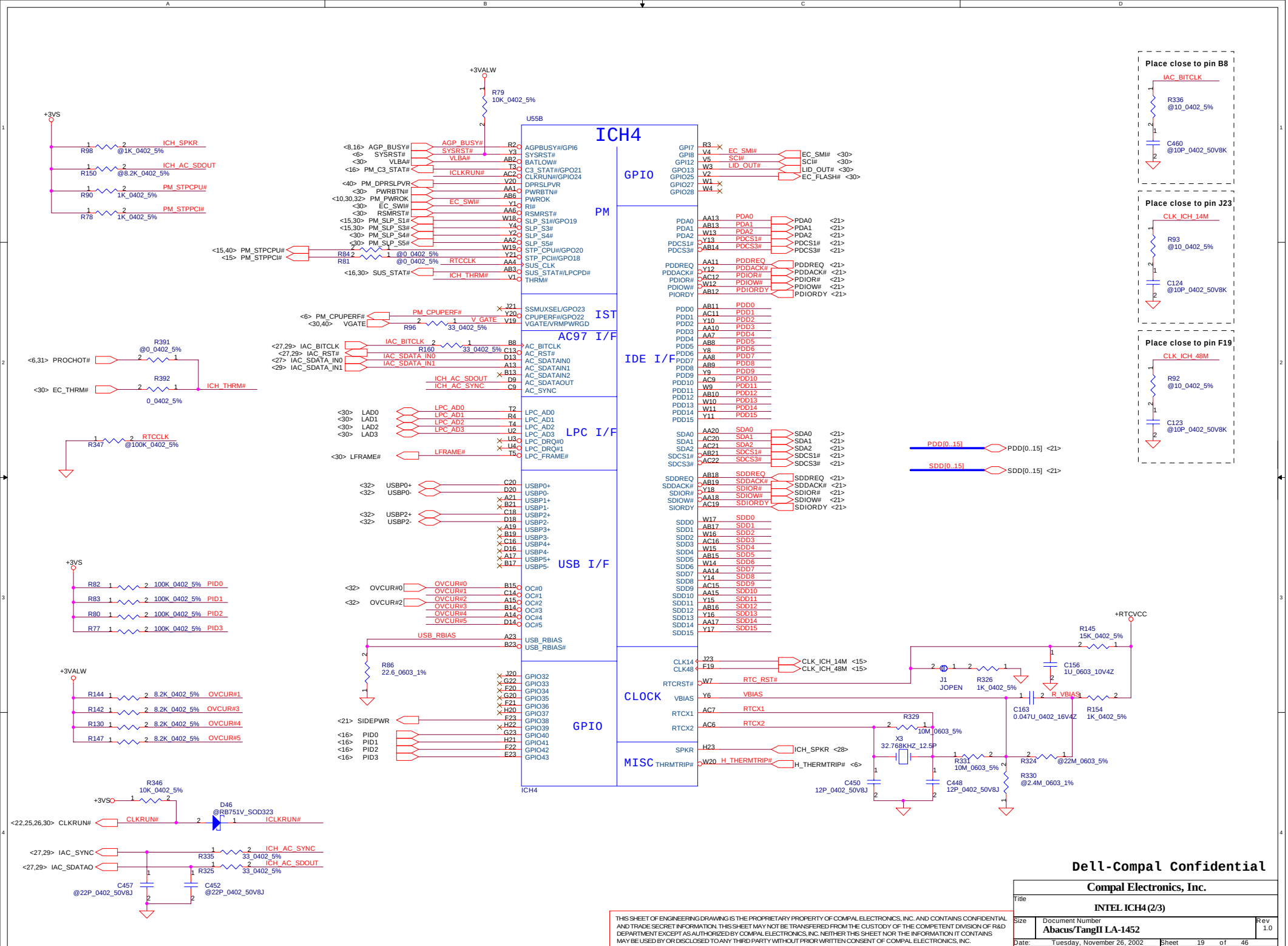

Dell-Compal Confidential

Compal Electronics, Inc.	
Title	INTEL ICH4 (2/3)
Size	Document Number: Abacus/TangII LA-1452 — Rev 1.0
Date: Tuesday, November 26, 2002	Sheet 19 of 46

THIS SHEET OF ENGINEERING DRAWING IS THE PROPRIETARY PROPERTY OF COMPAL ELECTRONICS, INC. AND CONTAINS CONFIDENTIAL AND TRADE SECRET INFORMATION. THIS SHEET MAY NOT BE TRANSFERED FROM THE CUSTODY OF THE COMPETENT DIVISION OF R&D DEPARTMENT EXCEPT AS AUTHORIZED BY COMPAL ELECTRONICS, INC. NEITHER THIS SHEET NOR THE INFORMATION IT CONTAINS MAY BE USED BY OR DISCLOSED TO ANY THIRD PARTY WITHOUT PRIOR WRITTEN CONSENT OF COMPAL ELECTRONICS, INC.

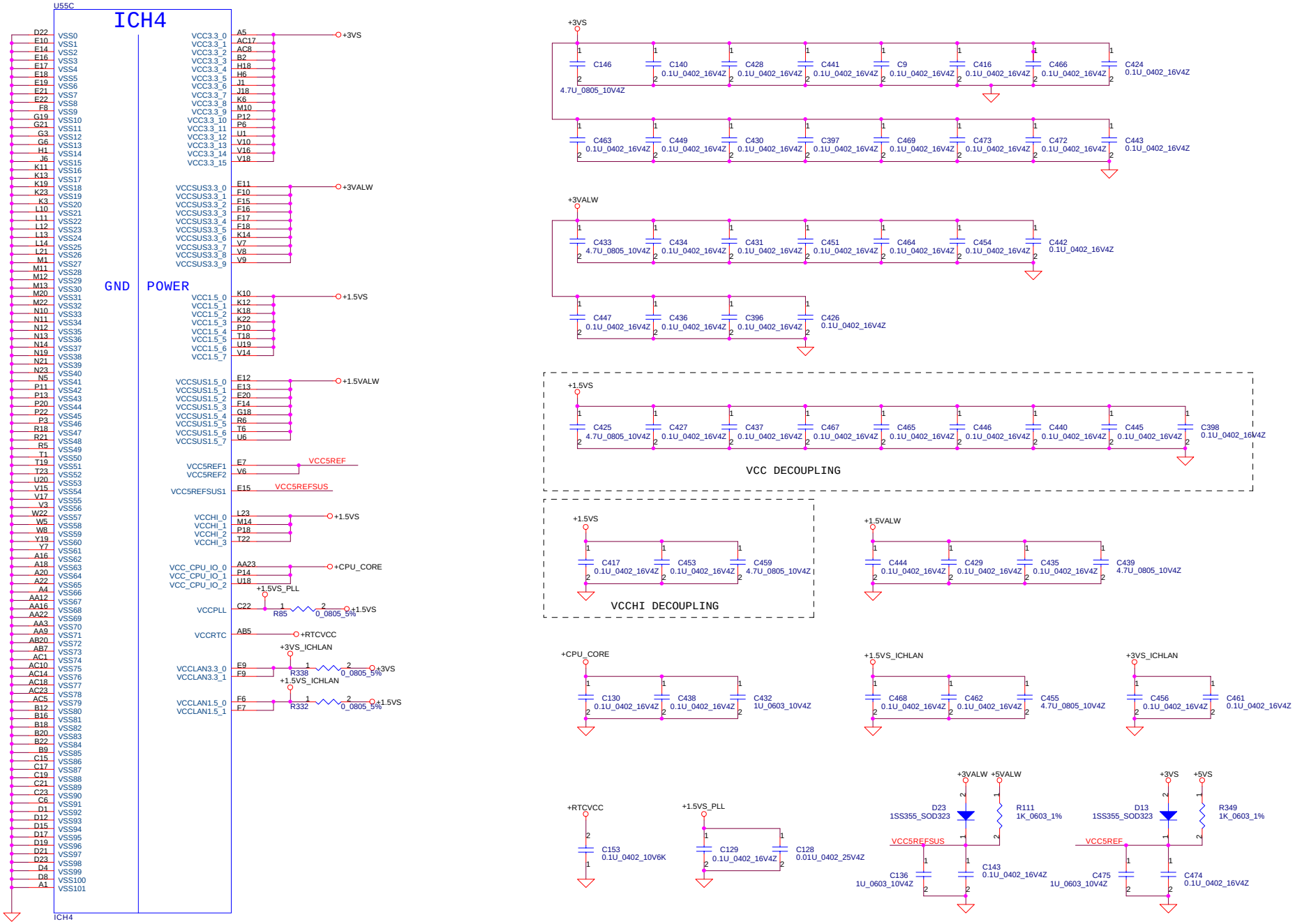

Dell-Compal Confidential

THIS SHEET OF ENGINEERING DRAWING IS THE PROPRIETARY PROPERTY OF COMPAL ELECTRONICS, INC. AND CONTAINS CONFIDENTIAL AND TRADE SECRET INFORMATION. THIS SHEET MAY NOT BE TRANSFERED FROM THE CUSTODY OF THE COMPETENT DIVISION OF R&D DEPARTMENT EXCEPT AS AUTHORIZED BY COMPAL ELECTRONICS, INC. NEITHER THIS SHEET NOR THE INFORMATION IT CONTAINS MAY BE USED BY OR DISCLOSED TO ANY THIRD PARTY WITHOUT PRIOR WRITTEN CONSENT OF COMPAL ELECTRONICS, INC.

Compal Electronics, Inc.	
Title	INTEL ICH4 (3/3)
Size	Document Number: Abacus/TangII LA-1452 — Rev 1.0
Date: Tuesday, November 26, 2002	Sheet 20 of 46

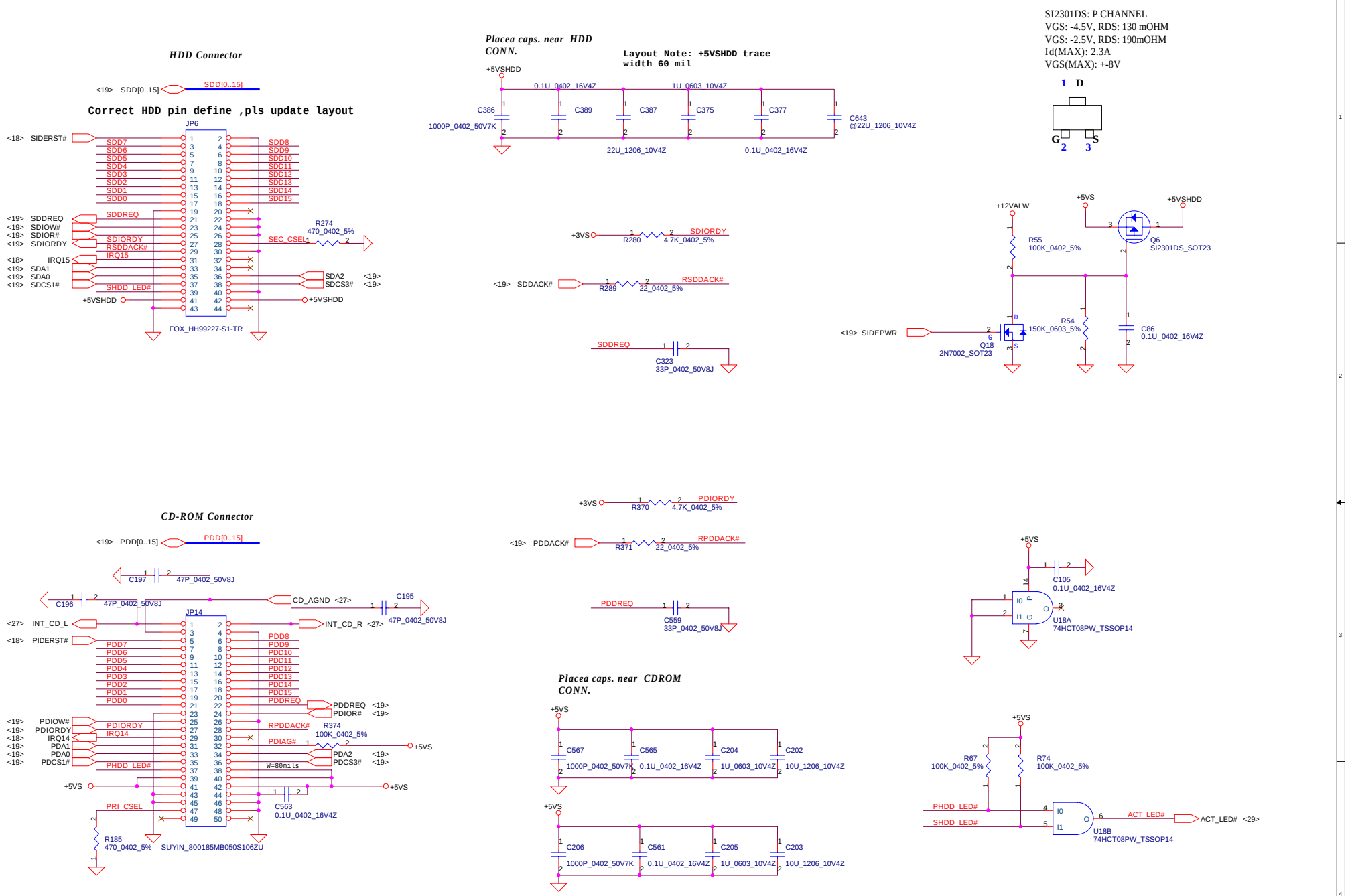

Dell-Compal Confidential

Compal Electronics, Inc.

Title: IDE/FDD/CD-ROM Module

Size | Document Number: Abacus/TangII LA-1452 | Rev 1.0

Date: Tuesday, November 26, 2002 | Sheet 21 of 46

THIS SHEET OF ENGINEERING DRAWING IS THE PROPRIETARY PROPERTY OF COMPAL ELECTRONICS, INC. AND CONTAINS CONFIDENTIAL AND TRADE SECRET INFORMATION. THIS SHEET MAY NOT BE TRANSFERED FROM THE CUSTODY OF THE COMPETENT DIVISION OF R&D DEPARTMENT EXCEPT AS AUTHORIZED BY COMPAL ELECTRONICS, INC. NEITHER THIS SHEET NOR THE INFORMATION IT CONTAINS MAY BE USED BY OR DISCLOSED TO ANY THIRD PARTY WITHOUT PRIOR WRITTEN CONSENT OF COMPAL ELECTRONICS, INC.

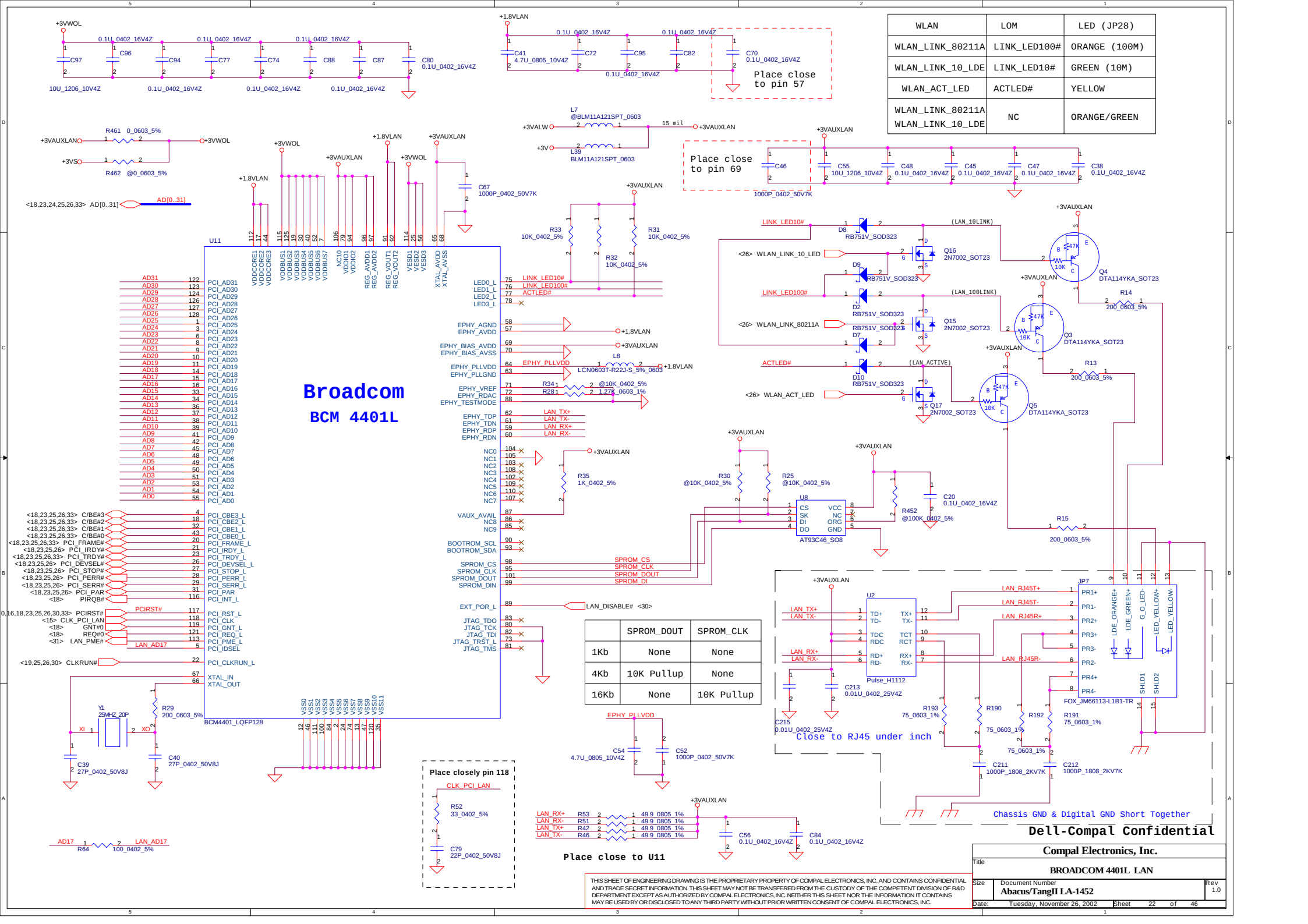

WLAN	LOM	LED (JP28)
WLAN_LINK_80211A	LINK_LED100#	ORANGE (100M)
WLAN_LINK_10_LDE	LINK_LED10#	GREEN (10M)
WLAN_ACT_LED	ACTLED#	YELLOW
WLAN_LINK_80211A WLAN_LINK_10_LDE	NC	ORANGE/GREEN

	SPROM_DOUT	SPROM_CLK
1Kb	None	None
4Kb	10K Pullup	None
16Kb	None	10K Pullup

THIS SHEET OF ENGINEERING DRAWING IS THE PROPRIETARY PROPERTY OF COMPAL ELECTRONICS, INC. AND CONTAINS CONFIDENTIAL AND TRADE SECRET INFORMATION. THIS SHEET MAY NOT BE TRANSFERED FROM THE CUSTODY OF THE COMPETENT DIVISION OF R&D DEPARTMENT EXCEPT AS AUTHORIZED BY COMPAL ELECTRONICS, INC. NEITHER THIS SHEET NOR THE INFORMATION IT CONTAINS MAY BE USED BY OR DISCLOSED TO ANY THIRD PARTY WITHOUT PRIOR WRITTEN CONSENT OF COMPAL ELECTRONICS, INC.

This page POP with 845PE for EXT.

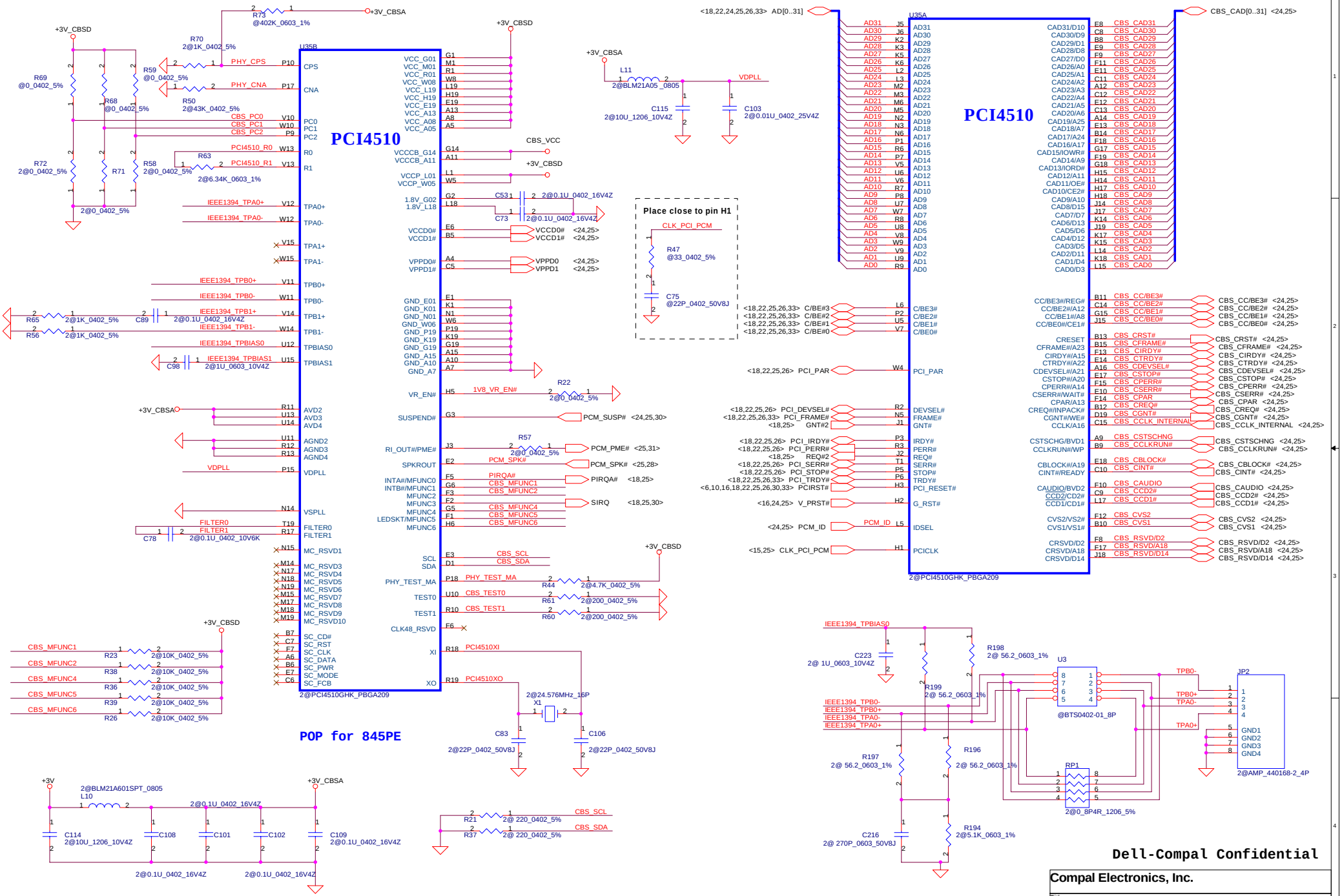

THIS SHEET OF ENGINEERING DRAWING IS THE PROPRIETARY PROPERTY OF COMPAL ELECTRONICS, INC. AND CONTAINS CONFIDENTIAL AND TRADE SECRET INFORMATION. THIS SHEET MAY NOT BE TRANSFERED FROM THE CUSTODY OF THE COMPETENT DIVISION OF R&D DEPARTMENT EXCEPT AS AUTHORIZED BY COMPAL ELECTRONICS, INC. NEITHER THIS SHEET NOR THE INFORMATION IT CONTAINS MAY BE USED BY OR DISCLOSED TO ANY THIRD PARTY WITHOUT PRIOR WRITTEN CONSENT OF COMPAL ELECTRONICS, INC.

PCMCIA Power Controller

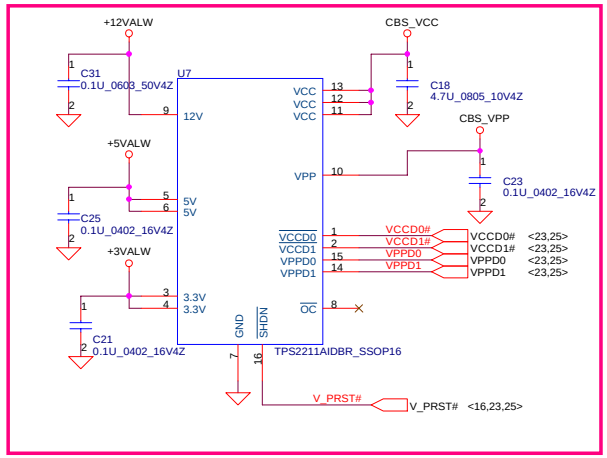

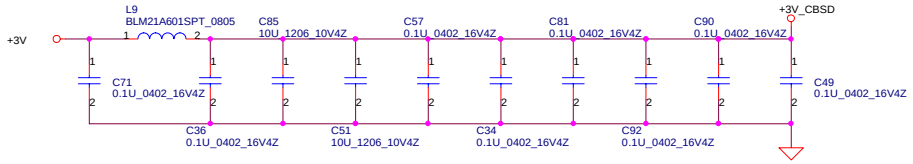

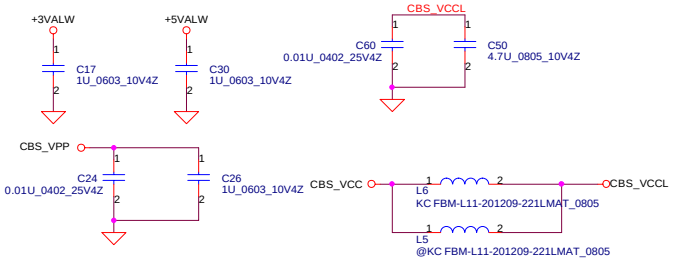

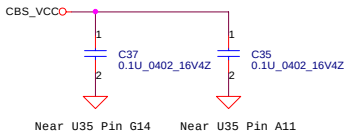

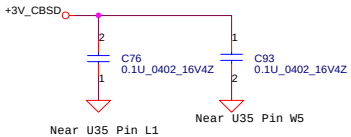

CardBus Socket

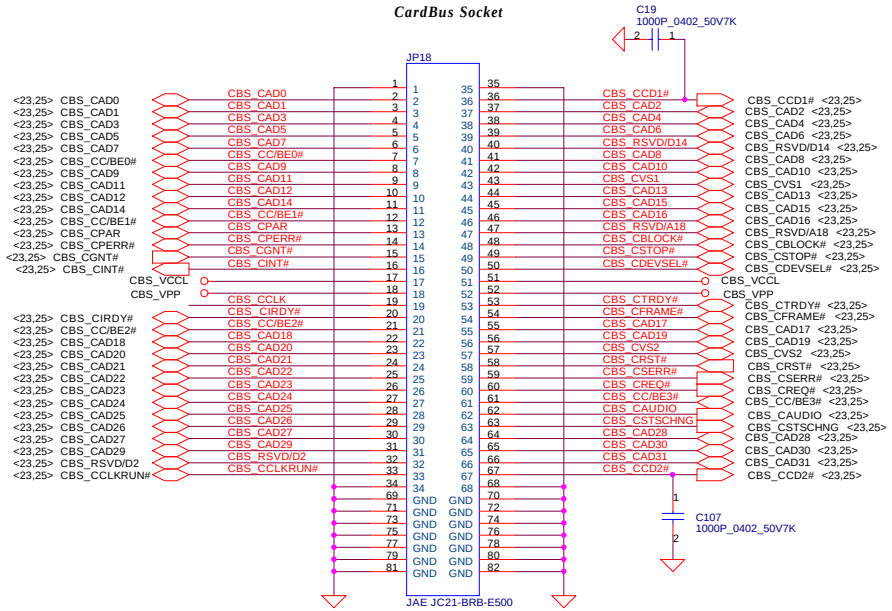

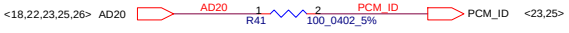

Dell-Compal Confidential

Compal Electronics, Inc.

Title: **PCMCIA Socket**

Size: | Document Number: **Abacus/TangII LA-1452** | Rev: 1.0

Date: Tuesday, November 26, 2002 | Sheet 24 of 46

THIS SHEET OF ENGINEERING DRAWING IS THE PROPRIETARY PROPERTY OF COMPAL ELECTRONICS, INC. AND CONTAINS CONFIDENTIAL AND TRADE SECRET INFORMATION. THIS SHEET MAY NOT BE TRANSFERED FROM THE CUSTODY OF THE COMPETENT DIVISION OF R&D DEPARTMENT EXCEPT AS AUTHORIZED BY COMPAL ELECTRONICS, INC. NEITHER THIS SHEET NOR THE INFORMATION IT CONTAINS MAY BE USED BY OR DISCLOSED TO ANY THIRD PARTY WITHOUT PRIOR WRITTEN CONSENT OF COMPAL ELECTRONICS, INC.

This page POP with 845GL for INT.

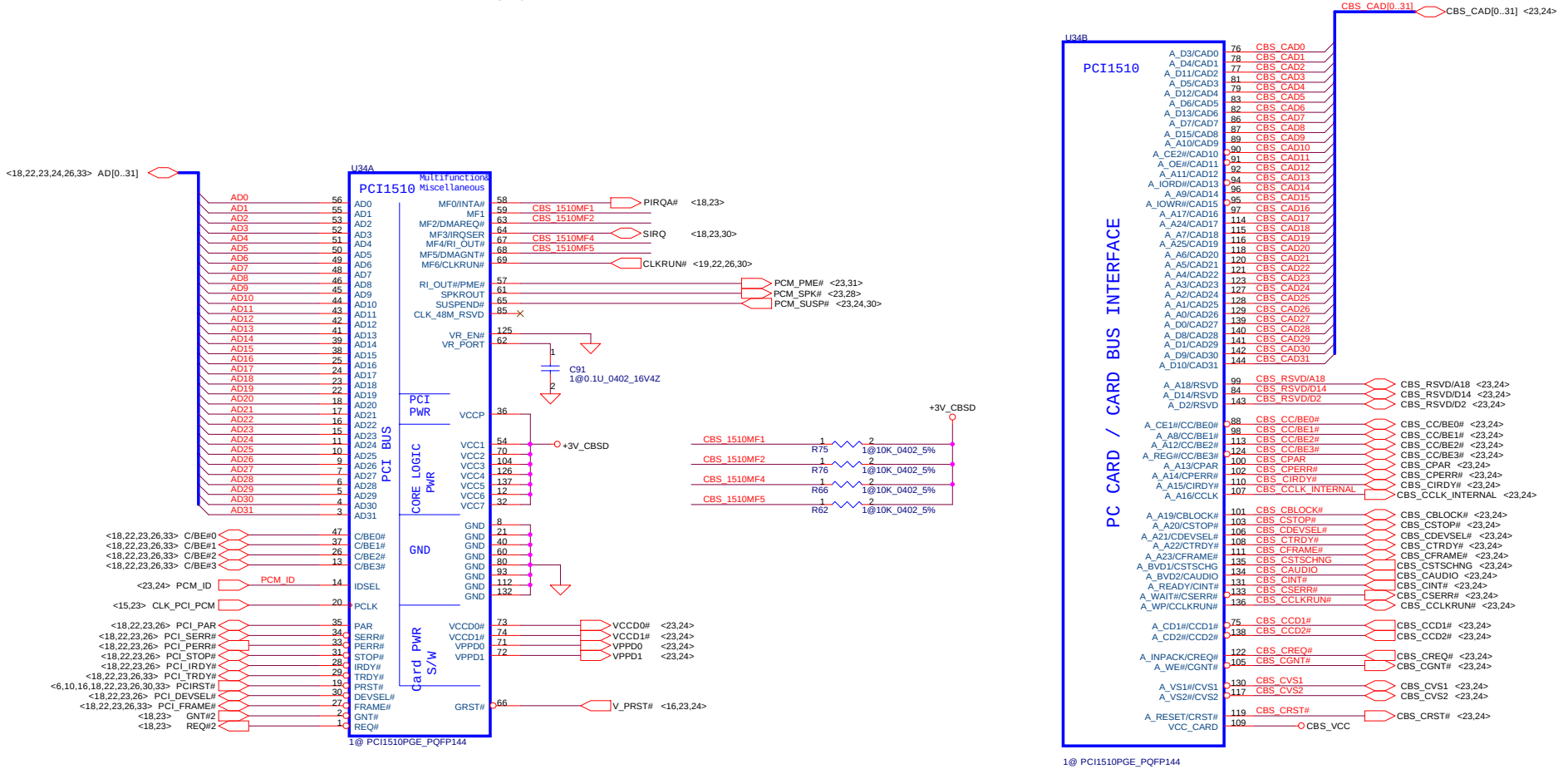

Dell-Compal Confidential

Compal Electronics, Inc.		
Title: **PCMCIA Controller PCI1510**		
Size	Document Number: **Abacus/TangII LA-1452**	Rev 1.0
Date: Tuesday, November 26, 2002	Sheet 25 of 46	

THIS SHEET OF ENGINEERING DRAWING IS THE PROPRIETARY PROPERTY OF COMPAL ELECTRONICS, INC. AND CONTAINS CONFIDENTIAL AND TRADE SECRET INFORMATION. THIS SHEET MAY NOT BE TRANSFERED FROM THE CUSTODY OF THE COMPETENT DIVISION OF R&D DEPARTMENT EXCEPT AS AUTHORIZED BY COMPAL ELECTRONICS, INC. NEITHER THIS SHEET NOR THE INFORMATION IT CONTAINS MAY BE USED BY OR DISCLOSED TO ANY THIRD PARTY WITHOUT PRIOR WRITTEN CONSENT OF COMPAL ELECTRONICS, INC.

MINI PCI TYPE III

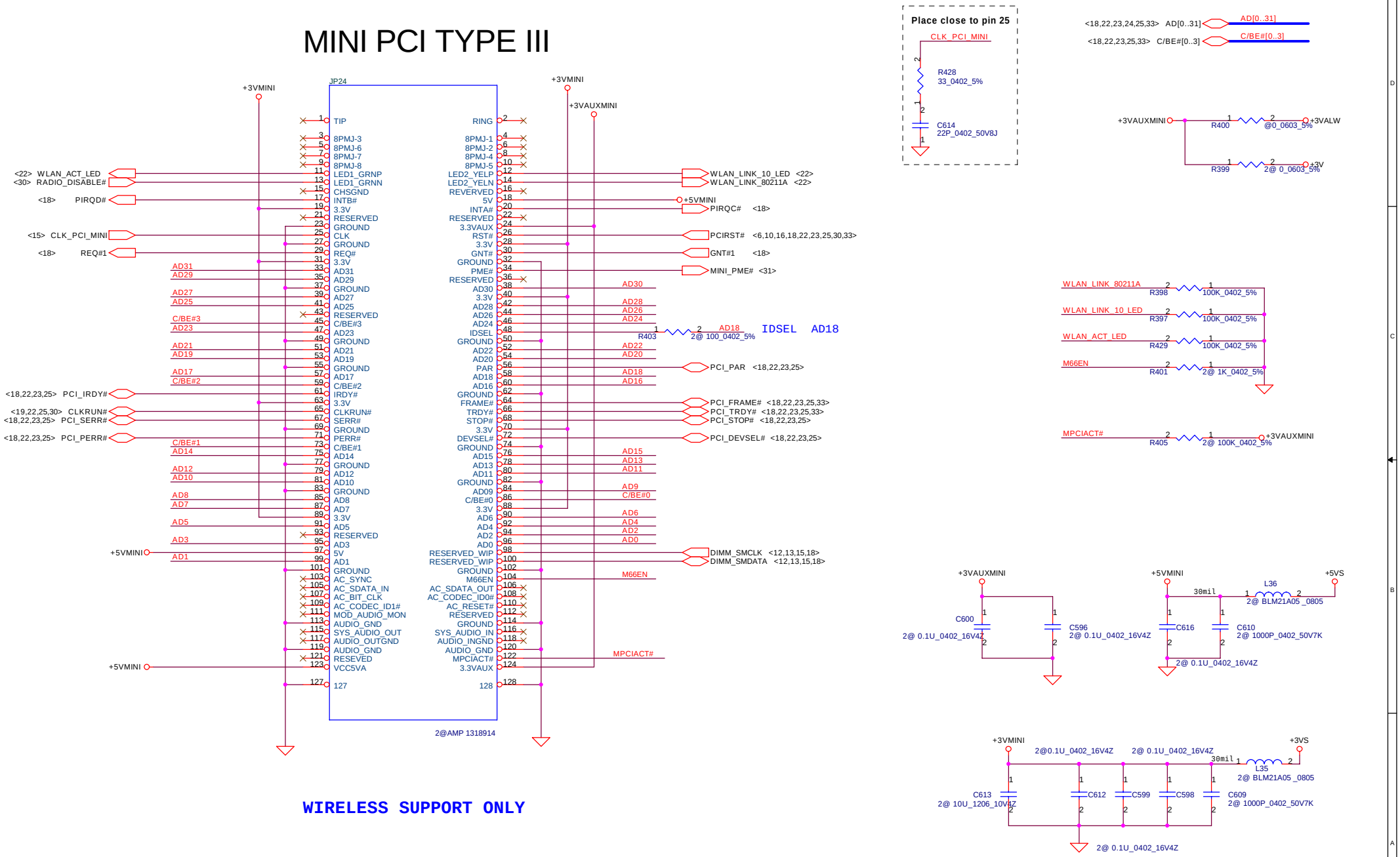

WIRELESS SUPPORT ONLY

Dell-Compal Confidential

THIS SHEET OF ENGINEERING DRAWING IS THE PROPRIETARY PROPERTY OF COMPAL ELECTRONICS, INC. AND CONTAINS CONFIDENTIAL AND TRADE SECRET INFORMATION. THIS SHEET MAY NOT BE TRANSFERED FROM THE CUSTODY OF THE COMPETENT DIVISION OF R&D DEPARTMENT EXCEPT AS AUTHORIZED BY COMPAL ELECTRONICS, INC. NEITHER THIS SHEET NOR THE INFORMATION IT CONTAINS MAY BE USED BY OR DISCLOSED TO ANY THIRD PARTY WITHOUT PRIOR WRITTEN CONSENT OF COMPAL ELECTRONICS, INC.

Compal Electronics, Inc.	
Title	MiniPci Port
Size	Document Number: Abacus/TangII LA-1452 — Rev 1.0
Date: Tuesday, November 26, 2002	Sheet 26 of 46

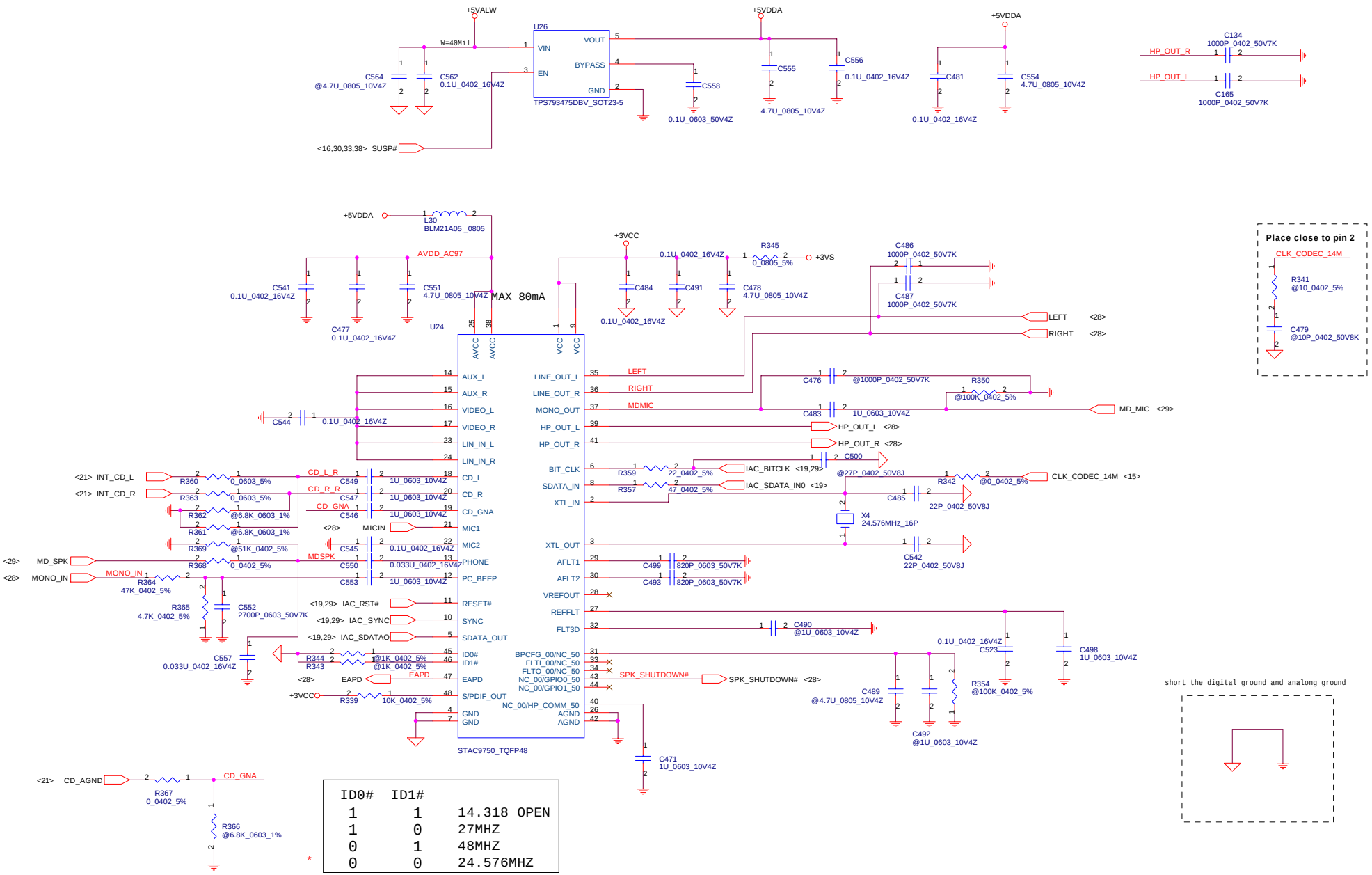

ID0#	ID1#	
1	1	14.318 OPEN
1	0	27MHZ
0	1	48MHZ
0	0	24.576MHZ

Dell-Compal Confidential

Compal Electronics, Inc.

Title: **AC97 CODEC**

Size | Document Number: **Abacus/TangII LA-1452** | Rev 1.0

Date: Tuesday, November 26, 2002 | Sheet 27 of 46

THIS SHEET OF ENGINEERING DRAWING IS THE PROPRIETARY PROPERTY OF COMPAL ELECTRONICS, INC. AND CONTAINS CONFIDENTIAL AND TRADE SECRET INFORMATION. THIS SHEET MAY NOT BE TRANSFERED FROM THE CUSTODY OF THE COMPETENT DIVISION OF R&D DEPARTMENT EXCEPT AS AUTHORIZED BY COMPAL ELECTRONICS, INC. NEITHER THIS SHEET NOR THE INFORMATION IT CONTAINS MAY BE USED BY OR DISCLOSED TO ANY THIRD PARTY WITHOUT PRIOR WRITTEN CONSENT OF COMPAL ELECTRONICS, INC.

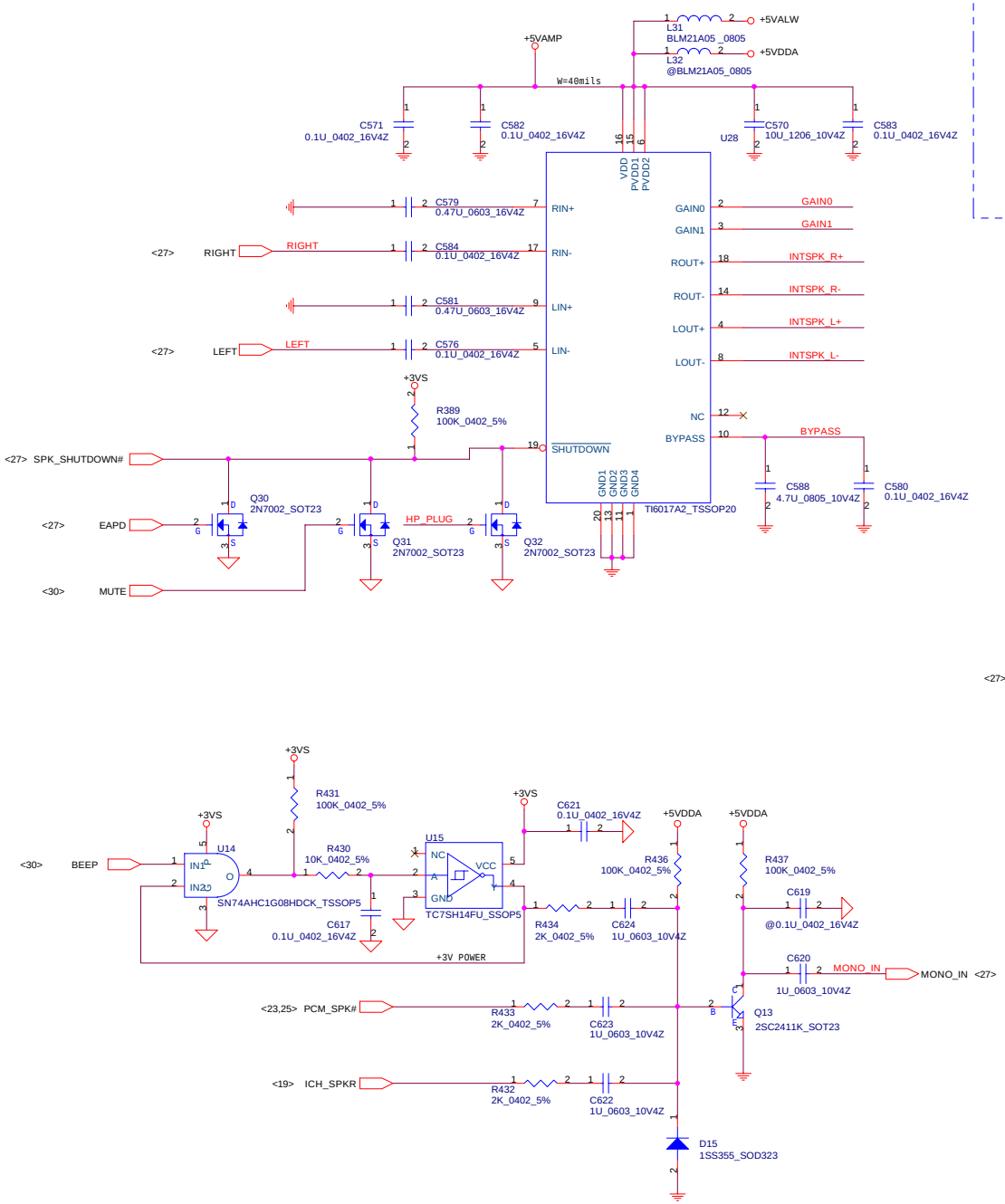

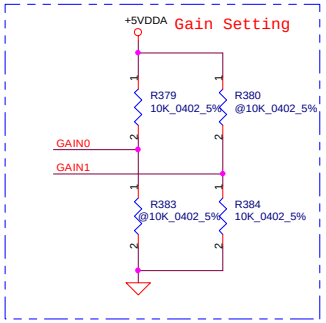

GAIN0	GAIN1	AV(inv)	INPUT IMPEDANCE
0	0	6dB	90K ohm
0	1	10dB	70K ohm
1	0	15.6dB	45K ohm
1	1	21.6dB	25K ohm

*

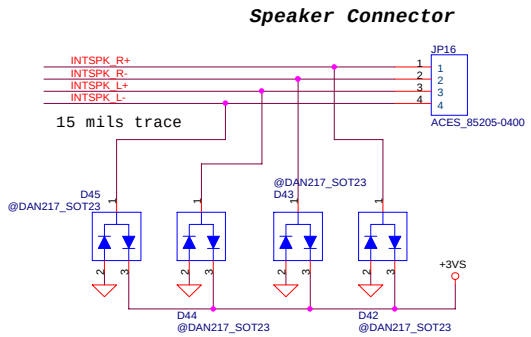

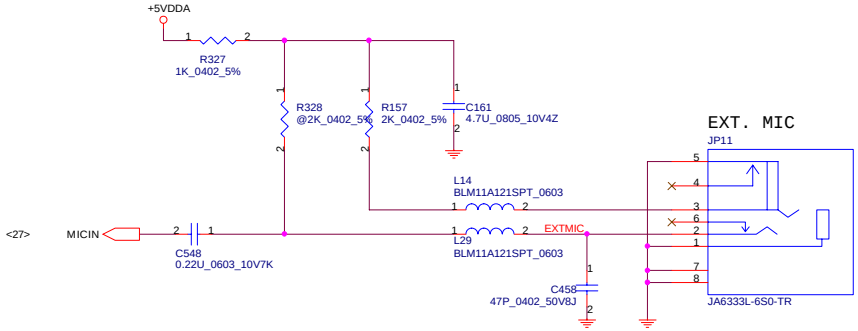

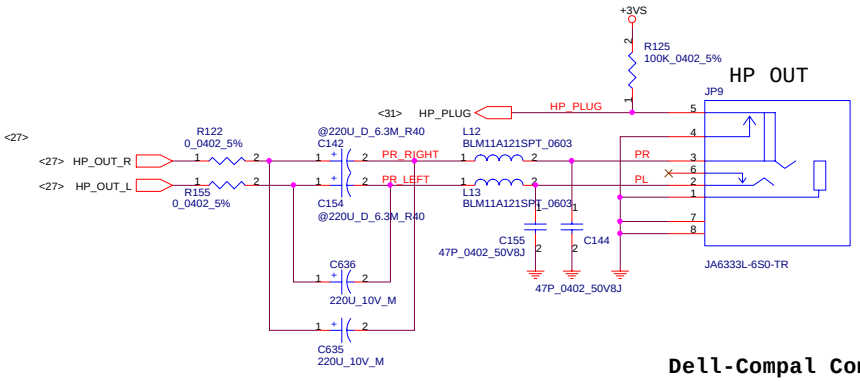

Dell-Compal Confidential

THIS SHEET OF ENGINEERING DRAWING IS THE PROPRIETARY PROPERTY OF COMPAL ELECTRONICS, INC. AND CONTAINS CONFIDENTIAL AND TRADE SECRET INFORMATION. THIS SHEET MAY NOT BE TRANSFERED FROM THE CUSTODY OF THE COMPETENT DIVISION OF R&D DEPARTMENT EXCEPT AS AUTHORIZED BY COMPAL ELECTRONICS, INC. NEITHER THIS SHEET NOR THE INFORMATION IT CONTAINS MAY BE USED BY OR DISCLOSED TO ANY THIRD PARTY WITHOUT PRIOR WRITTEN CONSENT OF COMPAL ELECTRONICS, INC.

Compal Electronics, Inc.		
Title: AMP & Audio Jack		
Size	Document Number: Abacus/TangII LA-1452	Rev 1.0
Date: Tuesday, November 26, 2002	Sheet 28 of 46	

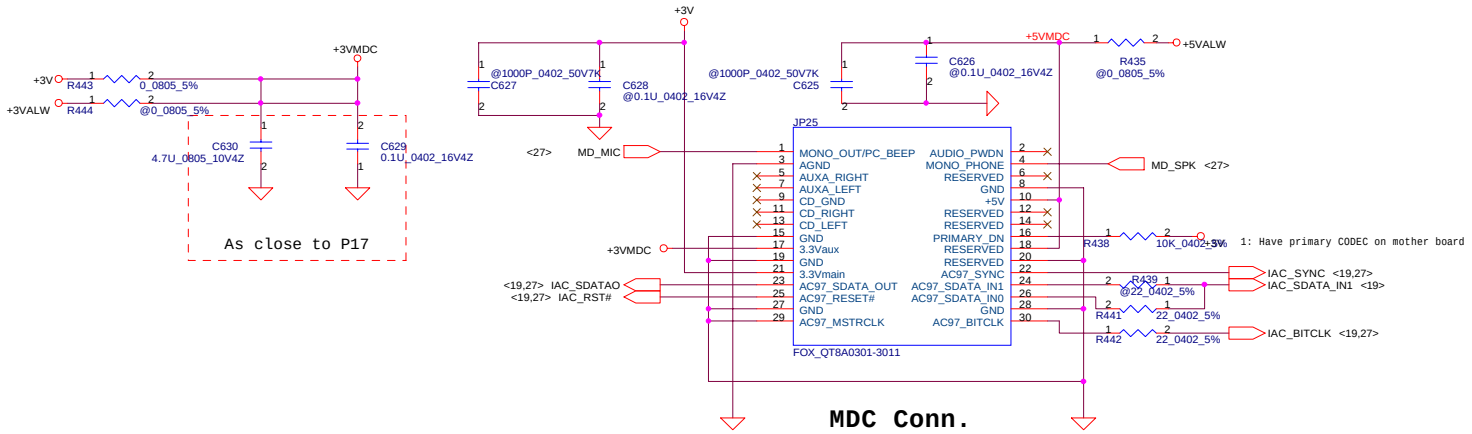

MDC Conn.

MDC Note
Pin 1 is NC for Pctel and connexant MDC modem
Pin 2 is NC for Pctel and connexant MDC modem

Touch Pad & Status LED Conn.

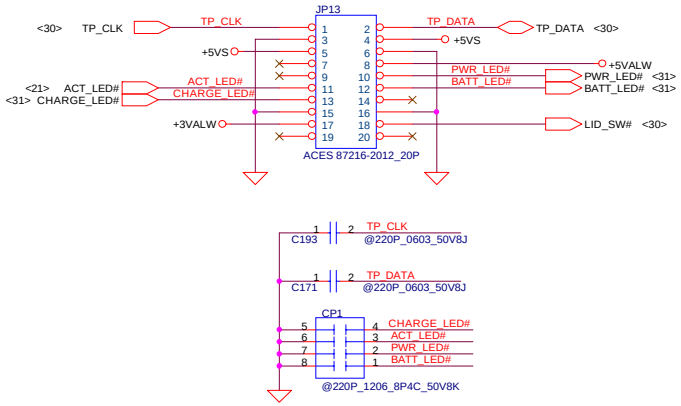

Screw Hole

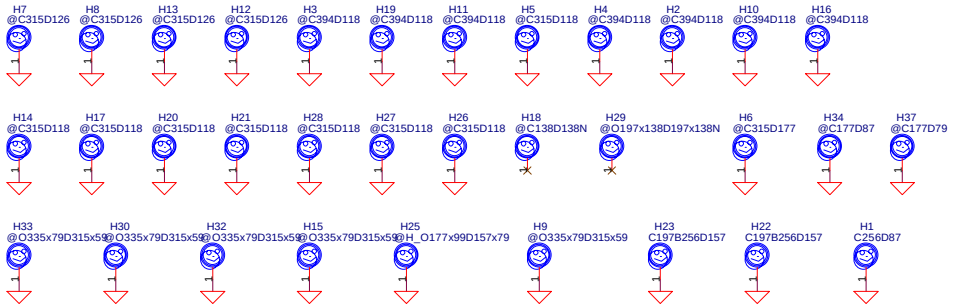

Fiduial Mark

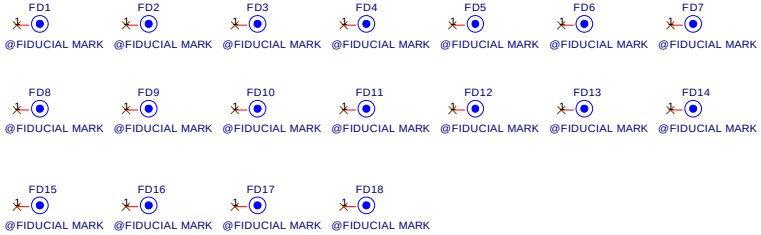

Dell-Compal Confidential

THIS SHEET OF ENGINEERING DRAWING IS THE PROPRIETARY PROPERTY OF COMPAL ELECTRONICS, INC. AND CONTAINS CONFIDENTIAL AND TRADE SECRET INFORMATION. THIS SHEET MAY NOT BE TRANSFERED FROM THE CUSTODY OF THE COMPETENT DIVISION OF R&D DEPARTMENT EXCEPT AS AUTHORIZED BY COMPAL ELECTRONICS, INC. NEITHER THIS SHEET NOR THE INFORMATION IT CONTAINS MAY BE USED BY OR DISCLOSED TO ANY THIRD PARTY WITHOUT PRIOR WRITTEN CONSENT OF COMPAL ELECTRONICS, INC.

Compal Electronics, Inc.		
Title: MDC / SWITCH Connector		
Size	Document Number: Abacus/TangII LA-1452	Rev 1.0
Date: Tuesday, November 26, 2002	Sheet 29 of 46	

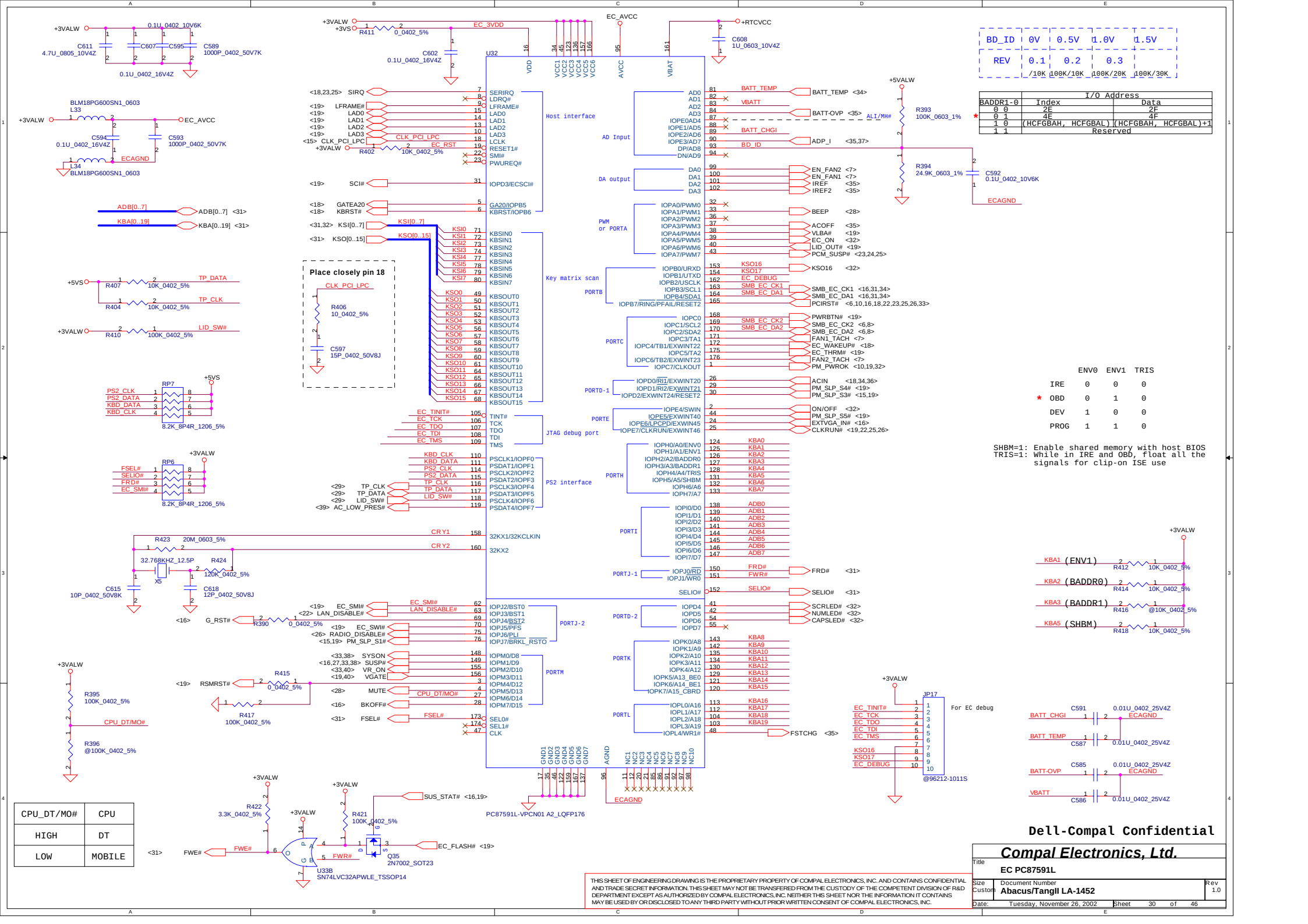

THIS SHEET OF ENGINEERING DRAWING IS THE PROPRIETARY PROPERTY OF COMPAL ELECTRONICS, INC. AND CONTAINS CONFIDENTIAL AND TRADE SECRET INFORMATION. THIS SHEET MAY NOT BE TRANSFERED FROM THE CUSTODY OF THE COMPETENT DIVISION OF R&D DEPARTMENT EXCEPT AS AUTHORIZED BY COMPAL ELECTRONICS, INC. NEITHER THIS SHEET NOR THE INFORMATION IT CONTAINS MAY BE USED BY OR DISCLOSED TO ANY THIRD PARTY WITHOUT PRIOR WRITTEN CONSENT OF COMPAL ELECTRONICS, INC.

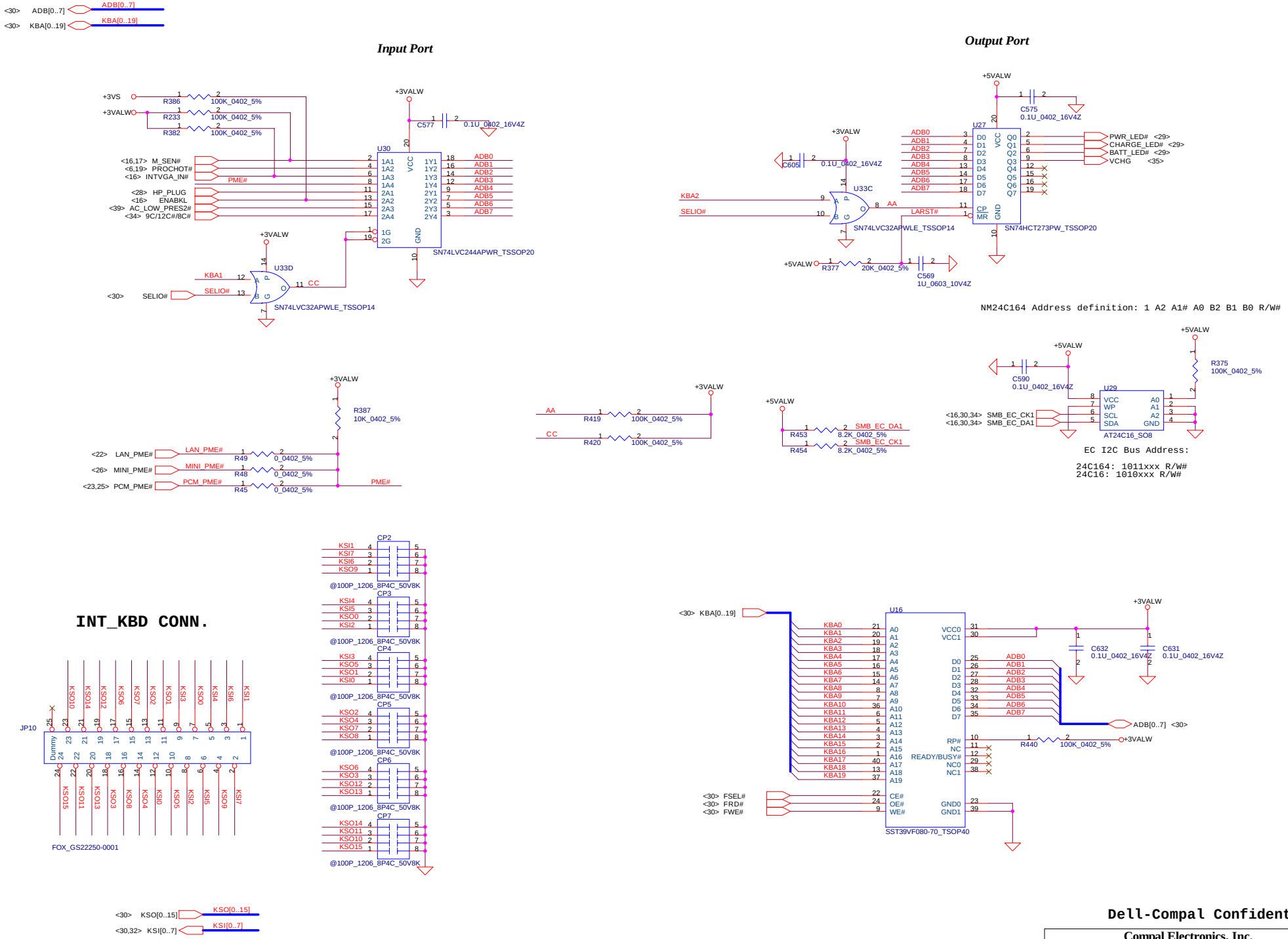

Dell-Compal Confidential

Compal Electronics, Inc.

Title: EC Extend I/O KB Conn. & BIOS

Size | Document Number: Abacus/TangII LA-1452 | Rev 1.0

Date: Tuesday, November 26, 2002 | Sheet 31 of 46

THIS SHEET OF ENGINEERING DRAWING IS THE PROPRIETARY PROPERTY OF COMPAL ELECTRONICS, INC. AND CONTAINS CONFIDENTIAL AND TRADE SECRET INFORMATION. THIS SHEET MAY NOT BE TRANSFERED FROM THE CUSTODY OF THE COMPETENT DIVISION OF R&D DEPARTMENT EXCEPT AS AUTHORIZED BY COMPAL ELECTRONICS, INC. NEITHER THIS SHEET NOR THE INFORMATION IT CONTAINS MAY BE USED BY OR DISCLOSED TO ANY THIRD PARTY WITHOUT PRIOR WRITTEN CONSENT OF COMPAL ELECTRONICS, INC.

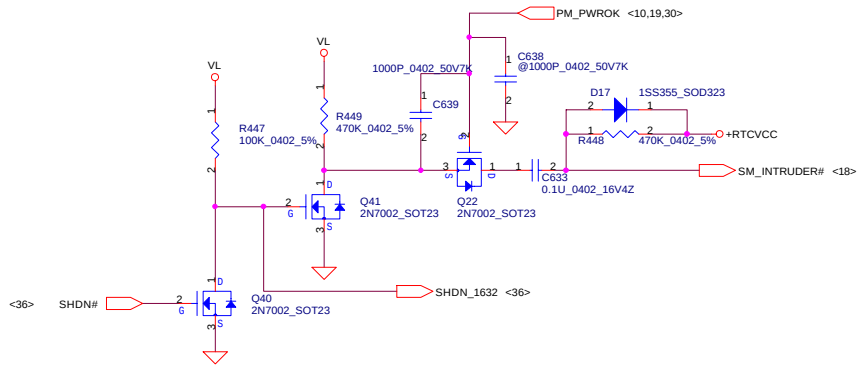

RTC Battery

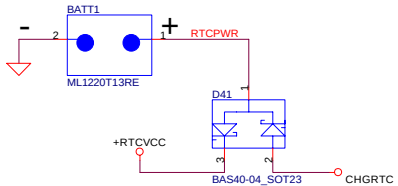

Power BTN

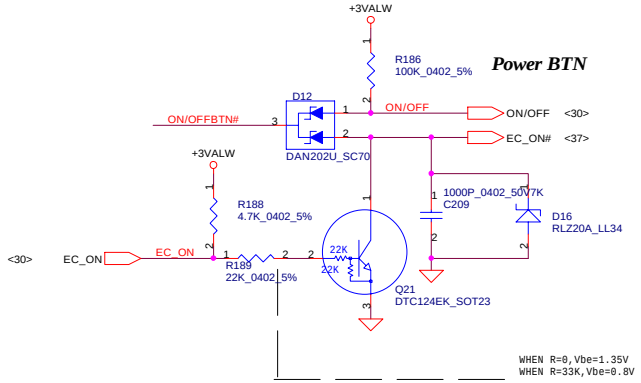

USB Over Current

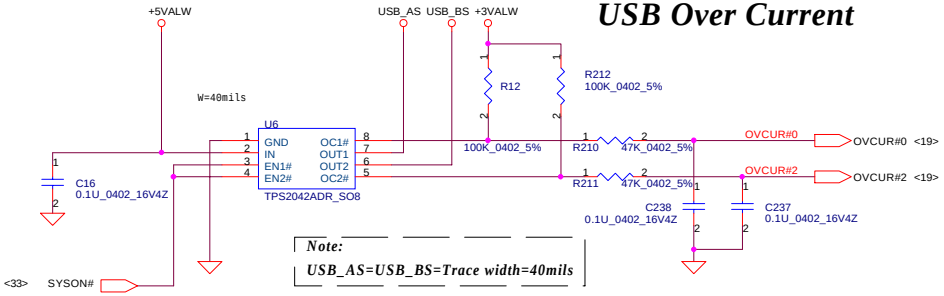

Note:
USB_AS=USB_BS=Trace width=40mils

USB PORT

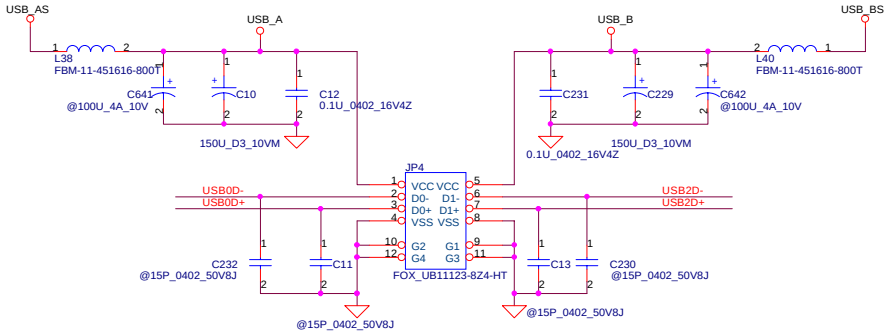

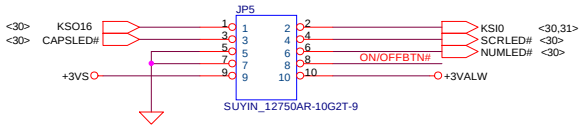

Power SW Function Button

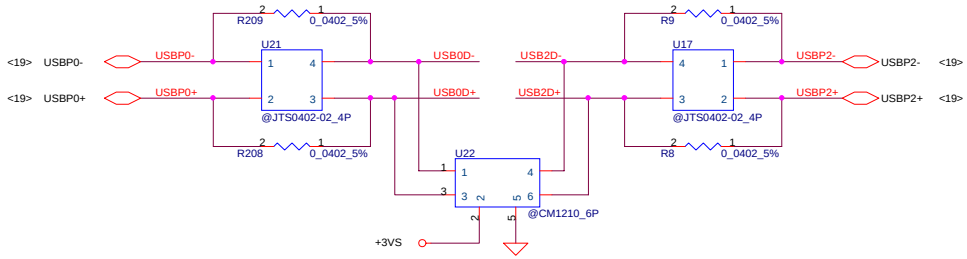

Dell-Compal Confidential

THIS SHEET OF ENGINEERING DRAWING IS THE PROPRIETARY PROPERTY OF COMPAL ELECTRONICS, INC. AND CONTAINS CONFIDENTIAL AND TRADE SECRET INFORMATION. THIS SHEET MAY NOT BE TRANSFERED FROM THE CUSTODY OF THE COMPETENT DIVISION OF R&D DEPARTMENT EXCEPT AS AUTHORIZED BY COMPAL ELECTRONICS, INC. NEITHER THIS SHEET NOR THE INFORMATION IT CONTAINS MAY BE USED BY OR DISCLOSED TO ANY THIRD PARTY WITHOUT PRIOR WRITTEN CONSENT OF COMPAL ELECTRONICS, INC.

Compal Electronics, Inc.	
Title	Power OK/Reset/RTC battery/USB Conn
Size	Document Number: Abacus/TangII LA-1452 — Rev 1.0
Date: Tuesday, November 26, 2002	Sheet 32 of 46

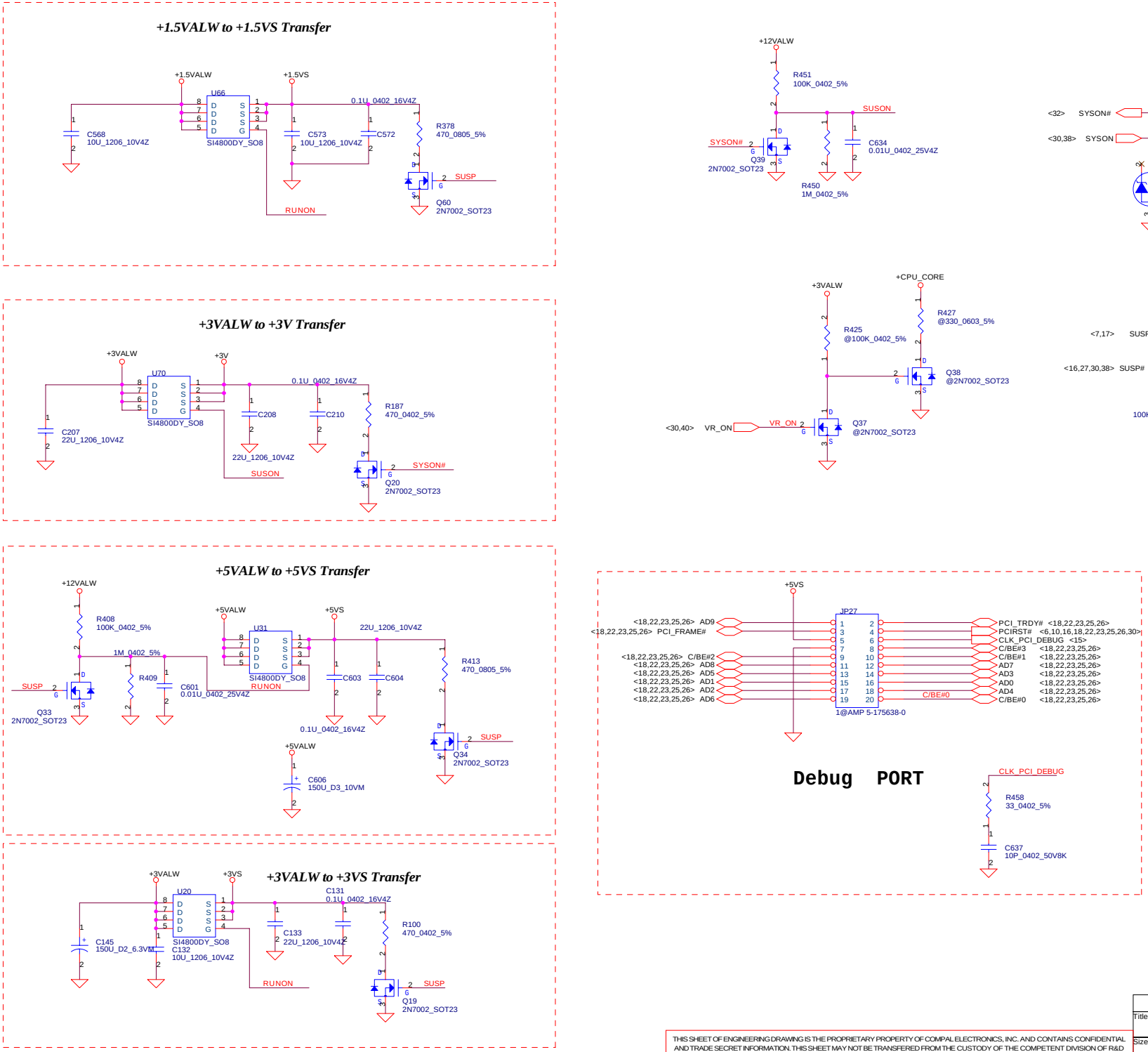

Dell-Compal Confidential

Compal Electronics, Inc.		
Title: DC/DC Circuit / Debug Port		
Size	Document Number: Abacus/TangII LA-1452	Rev 1.0
Date: Tuesday, November 26, 2002	Sheet 33 of 46	

THIS SHEET OF ENGINEERING DRAWING IS THE PROPRIETARY PROPERTY OF COMPAL ELECTRONICS, INC. AND CONTAINS CONFIDENTIAL AND TRADE SECRET INFORMATION. THIS SHEET MAY NOT BE TRANSFERED FROM THE CUSTODY OF THE COMPETENT DIVISION OF R&D DEPARTMENT EXCEPT AS AUTHORIZED BY COMPAL ELECTRONICS, INC. NEITHER THIS SHEET NOR THE INFORMATION IT CONTAINS MAY BE USED BY OR DISCLOSED TO ANY THIRD PARTY WITHOUT PRIOR WRITTEN CONSENT OF COMPAL ELECTRONICS, INC.

Detector

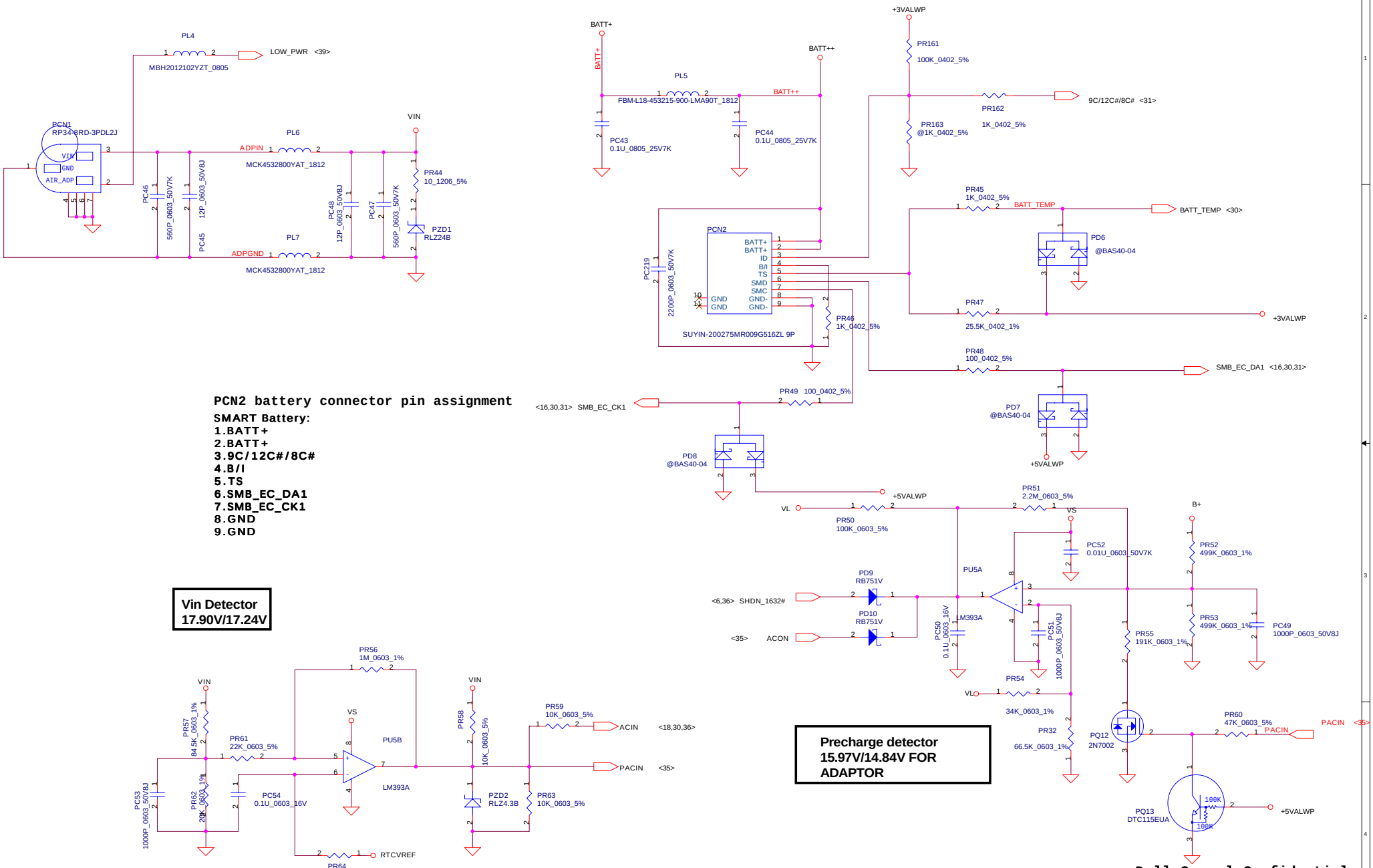

PCN2 battery connector pin assignment

SMART Battery:

1. BATT+
2. BATT+
3. 9C/12C#/8C#
4. B/I
5. TS
6. SMB_EC_DA1
7. SMB_EC_CK1
8. GND
9. GND

Dell-Compal Confidential

Compal Electronics, Inc.	
Title	Detector
Size	Document Number: Abacus/TangII LA-1452 — Rev 1.0
Date: Tuesday, November 26, 2002	Sheet 34 of 46

THIS SHEET OF ENGINEERING DRAWING IS THE PROPRIETARY PROPERTY OF COMPAL ELECTRONICS, INC. AND CONTAINS CONFIDENTIAL AND TRADE SECRET INFORMATION. THIS SHEET MAY NOT BE TRANSFERED FROM THE CUSTODY OF THE COMPETENT DIVISION OF R&D DEPARTMENT EXCEPT AS AUTHORIZED BY COMPAL ELECTRONICS, INC. NEITHER THIS SHEET NOR THE INFORMATION IT CONTAINS MAY BE USED BY OR DISCLOSED TO ANY THIRD PARTY WITHOUT PRIOR WRITTEN CONSENT OF COMPAL ELECTRONICS, INC.

Charger

Iadp=0~4.10A(90W)
Iadp=0~3.20A(70W)
Iair=0~2.25A(Air)

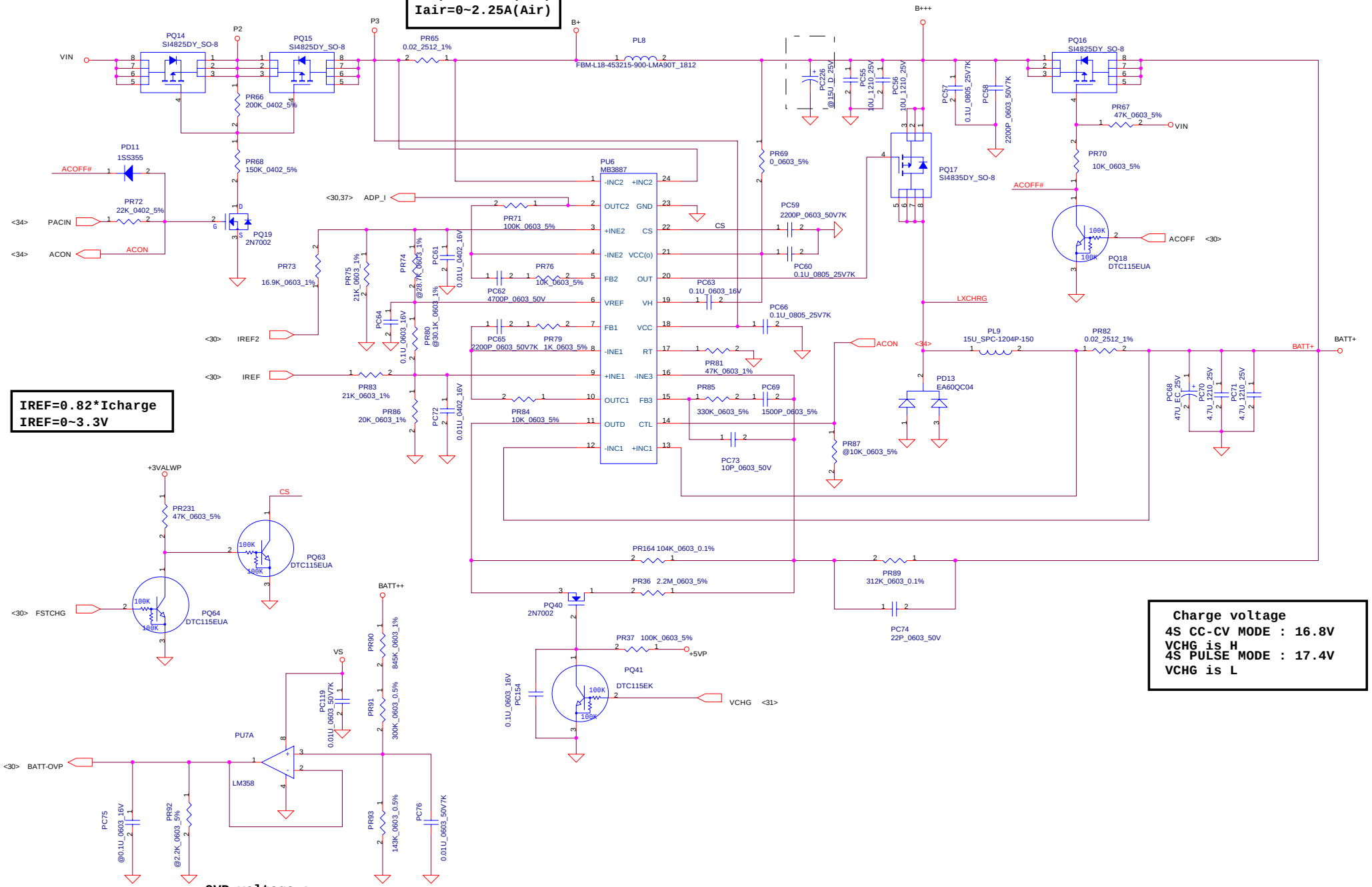

IREF=0.82*Icharge
IREF=0~3.3V

Charge voltage
4S CC-CV MODE : 16.8V
VCHG is H
4S PULSE MODE : 17.4V
VCHG is L

OVP voltage :
LI-4S :18.0V----BATT-OVP=2.00V
LI-3S :13.5V----BATT-OVP=1.50V
BATT-OVP=0.2206*BATT++

Dell-Compal Confidential

THIS SHEET OF ENGINEERING DRAWING IS THE PROPRIETARY PROPERTY OF COMPAL ELECTRONICS, INC. AND CONTAINS CONFIDENTIAL AND TRADE SECRET INFORMATION. THIS SHEET MAY NOT BE TRANSFERED FROM THE CUSTODY OF THE COMPETENT DIVISION OF R&D DEPARTMENT EXCEPT AS AUTHORIZED BY COMPAL ELECTRONICS, INC. NEITHER THIS SHEET NOR THE INFORMATION IT CONTAINS MAY BE USED BY OR DISCLOSED TO ANY THIRD PARTY WITHOUT PRIOR WRITTEN CONSENT OF COMPAL ELECTRONICS, INC.

Compal Electronics, Inc.		
Title: Charger		
Size	Document Number: Abacus/TangII LA-1452	Rev 1.0
Date: Tuesday, November 26, 2002	Sheet 35 of 46	

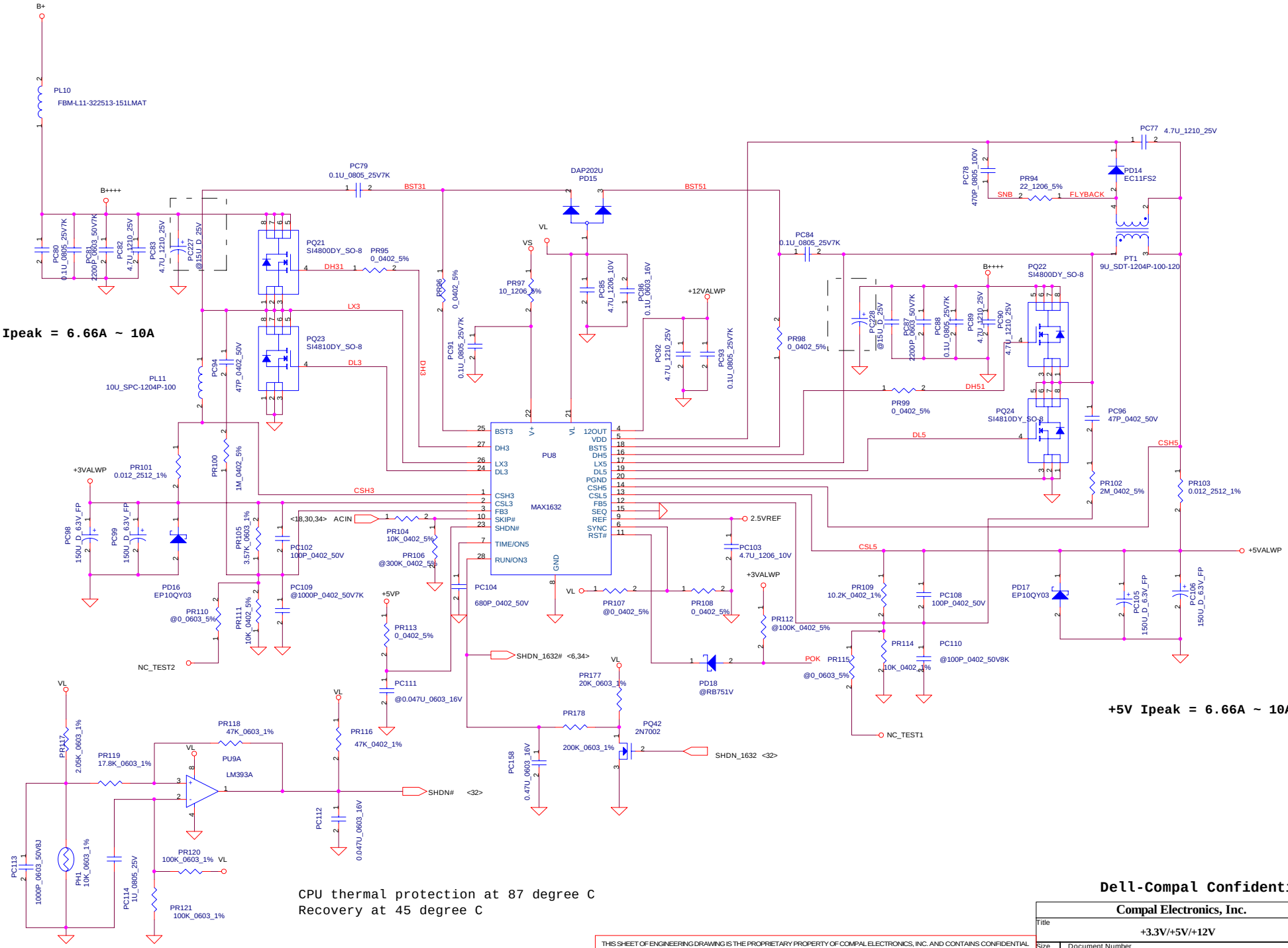

Dell-Compal Confidential

Compal Electronics, Inc.	
Title	+3.3V/+5V/+12V
Size	Document Number: Abacus/TangII LA-1452 — Rev 1.0
Date: Tuesday, November 26, 2002	Sheet 36 of 46

THIS SHEET OF ENGINEERING DRAWING IS THE PROPRIETARY PROPERTY OF COMPAL ELECTRONICS, INC. AND CONTAINS CONFIDENTIAL AND TRADE SECRET INFORMATION. THIS SHEET MAY NOT BE TRANSFERED FROM THE CUSTODY OF THE COMPETENT DIVISION OF R&D DEPARTMENT EXCEPT AS AUTHORIZED BY COMPAL ELECTRONICS, INC. NEITHER THIS SHEET NOR THE INFORMATION IT CONTAINS MAY BE USED BY OR DISCLOSED TO ANY THIRD PARTY WITHOUT PRIOR WRITTEN CONSENT OF COMPAL ELECTRONICS, INC.

+1.5VALW+-5%

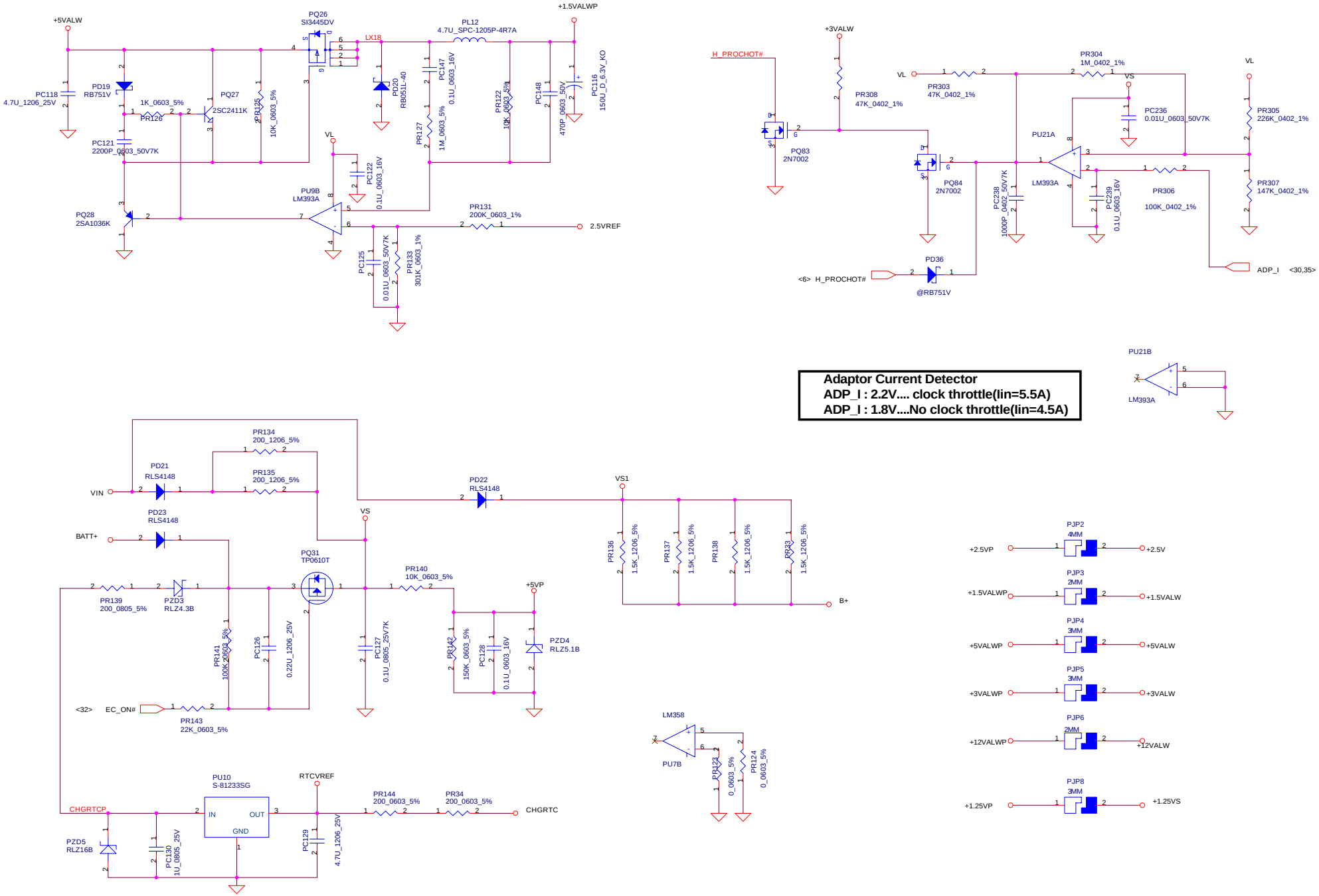

Adaptor Current Detector
ADP_I : 2.2V.... clock throttle(Iin=5.5A)
ADP_I : 1.8V....No clock throttle(Iin=4.5A)

Dell-Compal Confidential

THIS SHEET OF ENGINEERING DRAWING IS THE PROPRIETARY PROPERTY OF COMPAL ELECTRONICS, INC. AND CONTAINS CONFIDENTIAL AND TRADE SECRET INFORMATION. THIS SHEET MAY NOT BE TRANSFERED FROM THE CUSTODY OF THE COMPETENT DIVISION OF R&D DEPARTMENT EXCEPT AS AUTHORIZED BY COMPAL ELECTRONICS, INC. NEITHER THIS SHEET NOR THE INFORMATION IT CONTAINS MAY BE USED BY OR DISCLOSED TO ANY THIRD PARTY WITHOUT PRIOR WRITTEN CONSENT OF COMPAL ELECTRONICS, INC.

Compal Electronics, Inc.	
Title	+1.5VS
Size	Document Number: Abacus/TangII LA-1452 — Rev 1.0
Date: Tuesday, November 26, 2002	Sheet 37 of 46

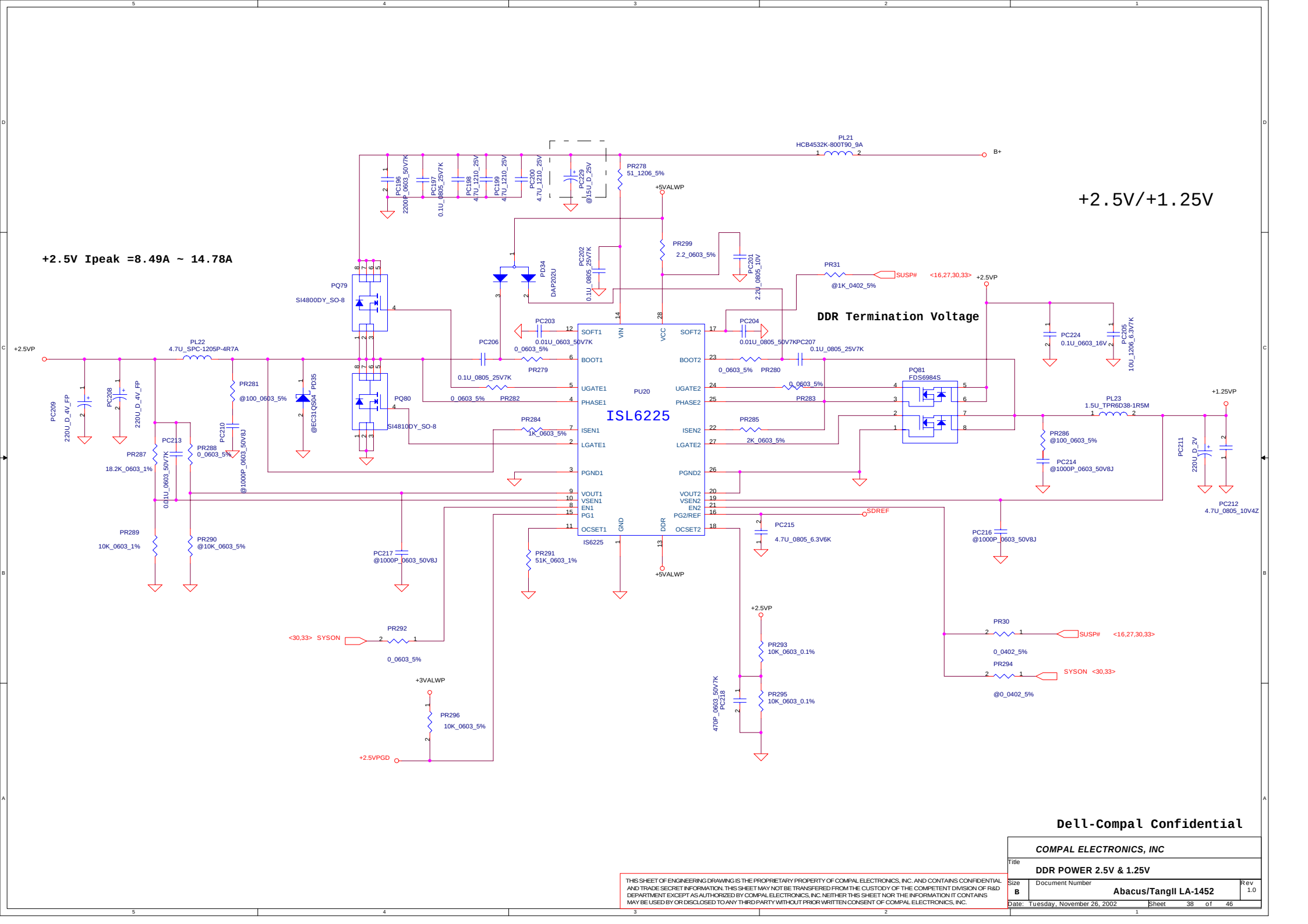

Dell-Compal Confidential

COMPAL ELECTRONICS, INC	
Title	DDR POWER 2.5V & 1.25V
Size B	Document Number Abacus/TangII LA-1452
Rev 1.0	
Date: Tuesday, November 26, 2002	Sheet 38 of 46

THIS SHEET OF ENGINEERING DRAWING IS THE PROPRIETARY PROPERTY OF COMPAL ELECTRONICS, INC. AND CONTAINS CONFIDENTIAL AND TRADE SECRET INFORMATION. THIS SHEET MAY NOT BE TRANSFERRED FROM THE CUSTODY OF THE COMPETENT DIVISION OF R&D DEPARTMENT EXCEPT AS AUTHORIZED BY COMPAL ELECTRONICS, INC. NEITHER THIS SHEET NOR THE INFORMATION IT CONTAINS MAY BE USED BY OR DISCLOSED TO ANY THIRD PARTY WITHOUT PRIOR WRITTEN CONSENT OF COMPAL ELECTRONICS, INC.

AC Adapter Detector

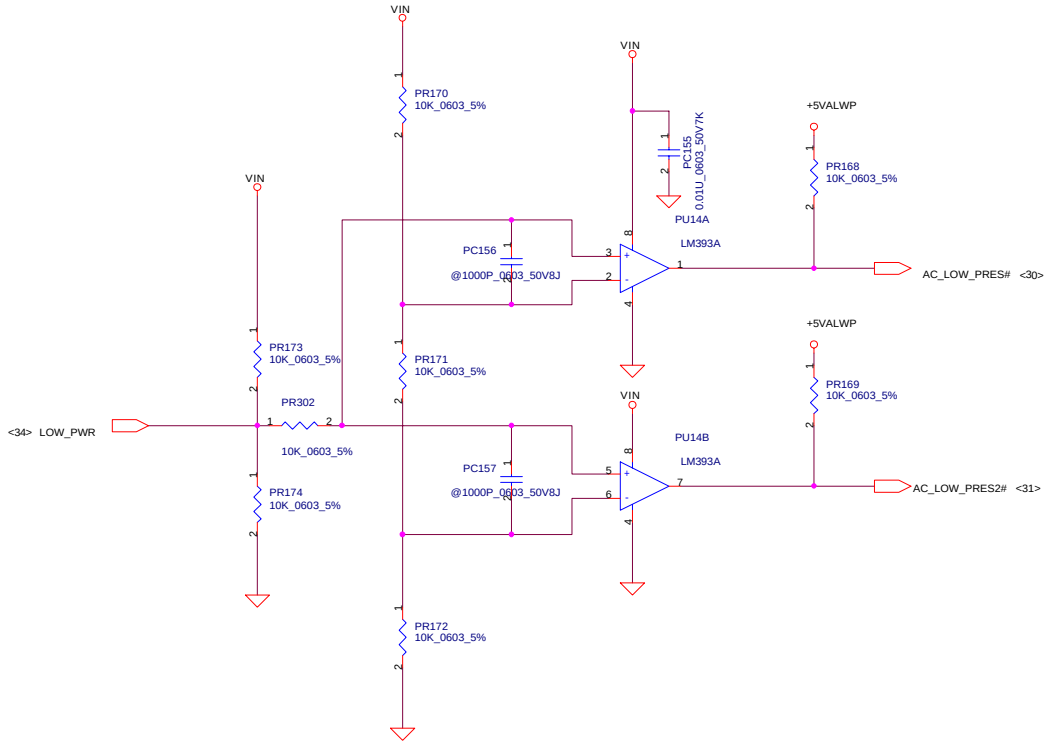

AC Adapter	LOW_PWR	AC_LOW_PRES#	AC_LOW_PRES2#	IREF2
90W	0V	0	0	2.96V
70W	Float	0	1	2.31V
AIRLINE	20V	1	1	1.62V

Dell-Compal Confidential

THIS SHEET OF ENGINEERING DRAWING IS THE PROPRIETARY PROPERTY OF COMPAL ELECTRONICS, INC. AND CONTAINS CONFIDENTIAL AND TRADE SECRET INFORMATION. THIS SHEET MAY NOT BE TRANSFERED FROM THE CUSTODY OF THE COMPETENT DIVISION OF R&D DEPARTMENT EXCEPT AS AUTHORIZED BY COMPAL ELECTRONICS, INC. NEITHER THIS SHEET NOR THE INFORMATION IT CONTAINS MAY BE USED BY OR DISCLOSED TO ANY THIRD PARTY WITHOUT PRIOR WRITTEN CONSENT OF COMPAL ELECTRONICS, INC.

Title	Adapter Detector	
Size	Document Number Abacus/TangII LA-1452	Rev 1.0
Date: Tuesday, November 26, 2002	Sheet 39 of 46	

Different Pin Definition for ISL6215 in PU16

#6	RAMPS	#12	ALTV	#17	NODV
#8	VMON	#13	OFFSET	#24	EN
#11	OCSET	#15	VRTN	#27	ALTEN
#26	SOFT				

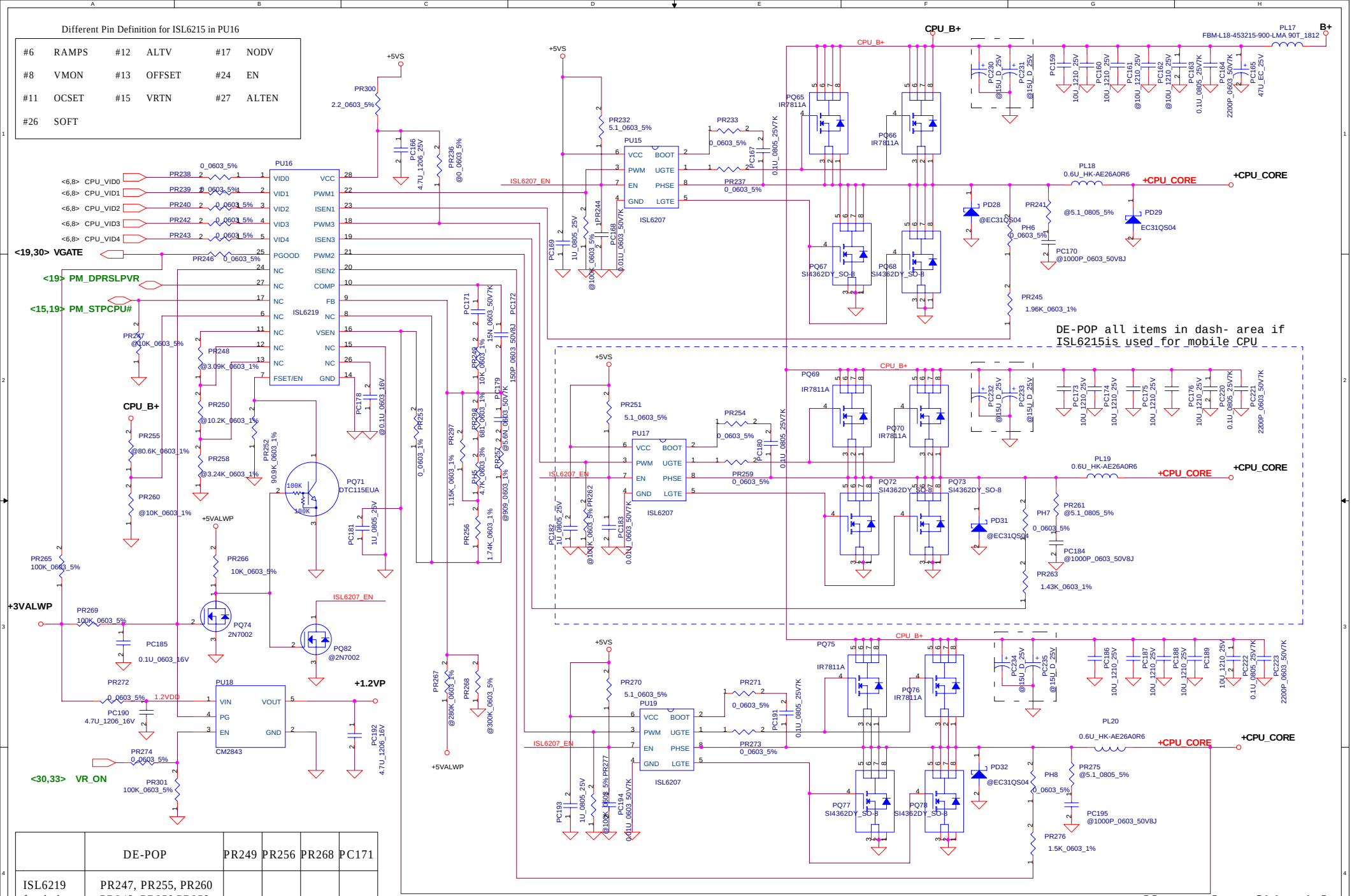

	DE-POP	PR249	PR256	PR268	PC171
ISL6219 for desk-top	PR247, PR255, PR260 PR248, PR250,PR258, PC178,PC172,PR236	7.5K	1.74K	unpop	5.6nF
ISL6215 for mobile	PR266, PQ74, PQ71 PR253, PC179, PR257	6.04K	1.5K	130K	4.7nF

PTC solution	1.PH6,PH7,PH8 pop thermal resistor 2. Non-pop PR298 and PH5 3.PR297 0 ohm
NTC solution	1.PH6,PH7,PH8 pop 0 ohm resistor 2. Pop PR298 681_0603_1%,PR297 1.15K_0603_1% 3. Pop PH5 4.7K thermal resistor

Dell-Compal Confidential

THIS SHEET OF ENGINEERING DRAWING IS THE PROPRIETARY PROPERTY OF COMPAL ELECTRONICS, INC. AND CONTAINS CONFIDENTIAL AND TRADE SECRET INFORMATION. THIS SHEET MAY NOT BE TRANSFERED FROM THE CUSTODY OF THE COMPETENT DIVISION OF R&D DEPARTMENT EXCEPT AS AUTHORIZED BY COMPAL ELECTRONICS, INC. NEITHER THIS SHEET NOR THE INFORMATION IT CONTAINS MAY BE USED BY OR DISCLOSED TO ANY THIRD PARTY WITHOUT PRIOR WRITTEN CONSENT OF COMPAL ELECTRONICS, INC.

COMPAL ELECTRONICS, INC

Title: +CPU_CORE

Size: B | Document Number: Abacus/TangII LA-1452 | Rev: 1.0

Date: Tuesday, December 10, 2002 | Sheet 40 of 46

Version change list (P.I.R. List)

Item	Fixed Issue	Reason for change	Rev.	PG#	Modify List	B.Ver#	Phase
1	Fireware issue	The ICH4 GNTA# strap pull up for EC BIOS	0.1A	18	Depop R153, GNTA# have internal pull up	0.1	SST
2	Leakage current issue	Reduce Broadcom 4401L leakage current	0.1A	22	Depop L39 and pop L7, conncetor power source from +3VALW to +3V, R31, R32, R33 pull up to +3VAUXLAN, Q3,Q4,Q5 pin3 connect to +3VAUXLAN	0.1	SST
3	Fix schematics part value	L21, L22, L23, L26 part value different with BOM	0.1B	15	Change L21, L22, L23, L26 part value from CHB2012U121 to BLM21A601SPT on schematics	0.1	SST
4	BOM issue	R445 include wrong part number	0.1B	33	Change R445 part number from SD028470200 to SD028680200. PN indicate value from 47K_0402_5% to 68K_0402_5%	0.1	SST
5	HDD leakage current issue	When AC in +5VSHDD will go up to 5V	0.1C	21	Q6 change to SI2302DS as schematics, SIDEPWR active low when HDD power on	0.1	SST
6	Capture library package issue	2N7002 Drain is pin1, Source is pin3	0.1C	28	Fixed Q30, Q31, Q32 Capture libaray , pin1 fixed to pin3, pin3 fixed to pin1	0.1	SST
7	BOM issue	Fixed R196~R199 from 56.2K ohm to 56.2 ohm	0.1C	23	Change R196~R199 PN from SD014562207 to SD014562A00 on schematics	0.1	SST
8	Fix LOM EEPROM issue	U8 (AT93C46) is used X16 organization	0.1C	22	NC or pop R452 to pull up U8 pin6 for X16 organization select	0.1	SST
9	Fix CLKRUN# leakage issue	ICH4 not implement CLKRUN#, GPIO24 is resume power well.	0.1D	19	Add a diode D46 to isolate GPIO24 from ICH4 to PCI devices, and depop D46.	0.2	PT
10	LOM EEPROM issue	U8 (AT93C46) is used X16 organization. U8 pin6 pull up or NC for X16 organization select, pull down for X8 organization selcet.	0.1D	22	U8 pin6 pull up +3VAUXLAN via R452 , and depop R452.	0.2	PT
11	SW BD LED keep turn on	SW BD LED control transistor Emitter conncet to +5VALW be keep LED always turn on	0.1D	32	Change JP5 pin9 from +5VS to +3VS	0.2	PT
12	Fix VCCA_SM voltage drop issue	Add current rating for VCCA_SM, VCCA_DPLL, VCCA_FSB (1.5VS)	0.1E	10	Change L3, L4, L27, L28 from MLF2012DR68XT to FBM-L11-201209-121LMA05	0.2	PT
13	Change address and control signals layout topology	Change ddr address and control signal layout topology	0.1E	12,13	DDR address and control signals layout topology same the ddr data layout topology	0.2	PT
14	Fix EE issue item 89	Signal COMP/B and Y/G connect error	0.1E	17	Swap COMP/B and Y/G to correct connection	0.2	PT
15	Fix EE issue item 91	BEEP# from EC should be high active	0.1E	28	Change net name BEEP# to BEEP	0.2	PT
16	Fix EE issue item 92	Fix FSB 400MHz when 845GL pop	0.1E	15	Add R455 (8.2K_5%) pull down for H_BSEL0	0.2	PT
17	Fix EE issue item 95	When AC insertion SUSP# may be floating before the KBC can programit.	0.1E	33	Add R456 (100K_5%) pull down SUSP#	0.2	PT
18	Fix EE issue item 47	Provide enough current rating	0.1F	15	L22 and L26 change frome BLM21A601SPT (300mA) to FBM-L11-201209-121LMA05 (500mA) and depop L22	0.2	PT
19	Card Bus power bead current rating not enough	Provide enough current rating	0.1F	24	L5 and L6 change frome FBM-11-160808-800LMT_0603 (300mA) to FBM-L11-201209-121LMA05 (500mA)	0.2	PT
20	Fix EE issue item 102	Fix Intel CPU FSB frequency issue	0.1F	10,15	H_SEL0 connect to R270 pin1 from CLK generator, HBSEL0 connector to R270 pin2 from CPU. Depop R270 on GL board.	0.2	PT
21	Battery charge issue	ACIN pull up +3VALW can't change power supplier to battery when AC exit	0.1F	18	Depop R161	0.2	PT
22	NO	Change PCMCIA connector	0.1F	24	Change PCMCIA conncetor from AMP_0-1376275-1 to JAE_JC21-BRB	0.2	PT
23	Fix INTRUDER issue	ESD protect for Q22	0.1F	32	Add C638, C639 for Q22 protection	0.2	PT
24	Remove PS2 connector	No necessary	0.1G	29	Remove RP7, JP26	0.2	PT
25	Add debug port	GL board have not pop minipci connector, we need a port 80 debug tool	0.1G	33	Add R458, C637 and JP27	0.2	PT
27	For cost save	For cost save	0.1G	32	Depop C10, C229 (150U Poly Cap), add C641, C642 (100U Petit Cap)	0.2	PT
28	It no need	Use R19 pop and depop to control H_SEL0 high or low	0.1G	15	Remove R455	0.2	PT
29	Fix EE issue item 134	Change ddr address and control signal layout topology	0.1H	12,13	Change DDR address and control signal to go back SST topology	0.2	PT
30	Fix EE issue item 149	Pop Petit Cap after EA test	0.1H	32	Depop C641, C642 and pop C10, C229	0.2	PT
31	Fix EMI issue	EMI team's recommendation	0.1I	10	Pop R52, C79 for CLK_CLK_PCI_LAN; R428, C614 for CLK_PCI_MINI; R406, C597 for CLK_PCI_LPC; R321, C395 for CLK_ICH_66M	0.2	PT

THIS SHEET OF ENGINEERING DRAWING IS THE PROPRIETARY PROPERTY OF COMPAL ELECTRONICS, INC. AND CONTAINS CONFIDENTIAL AND TRADE SECRET INFORMATION. THIS SHEET MAY NOT BE TRANSFERED FROM THE CUSTODY OF THE COMPETENT DIVISION OF R&D DEPARTMENT EXCEPT AS AUTHORIZED BY COMPAL ELECTRONICS, INC. NEITHER THIS SHEET NOR THE INFORMATION IT CONTAINS MAY BE USED BY OR DISCLOSED TO ANY THIRD PARTY WITHOUT PRIOR WRITTEN CONSENT OF COMPAL ELECTRONICS, INC.

Version change list (P.I.R. List)

Item	Fixed Issue	Reason for change	Rev.	PG#	Modify List	B.Ver#	Phase
32	No	Connect MiniPci conncetor metal door to short to GND	0.1I	26	Add JP24 pin 127, 128 on schematics short to GND, JP24 footprint pin 127, 128 (metal lock door) be short to GND	0.2	PT
33	No	Some text mode use wire, change to line	0.1I	10,30,40	Some text mode use wire, change to line	0.2	PT
34	Fix power on issue	Use PCIRST# to set the SHDN_1632# work after PCIRST# high when power on	0.1I	6	Add Q62 gate connect to PCIRST#, source connect to SHDN_1632#	0.2	PT
35	No	Change to use approve part	0.1I	31	RP118 (8.2K +-5% 4P2R) change to R453, R454 (8.2K_0402_5%)	0.2	PT
36	No	Hard Disk source power change to +5VS	0.1I	21	Q6 change back to SI2301DS (PMOS) pin3 connect to +5VS	0.2	PT
37	Fix EE issue item 134	Change DDR address and control signal topology back to REV0.1	0.1I	12,13	Change DDR address and control signal topology back to REV0.1	0.2	PT
38	Fix EE issue item 171	For CRT Hsync and Vsync to allow tuning	0.1I	17	Add series resistors R459, R460 for Hsync and Vsync	0.2	PT
39	No	Schematic version change for PT build	0.2	ALL	Change revision from 0.1I to 0.2	0.2	PT
40	Fix issue item 20	Slow rising and falling time	0.2A	10	Pop R234, C249 for CLK_MCH_DISPLAY; R286, C333 for CLK_MCH_66M	0.2	PT
41	Fix CRT rising and falling time issue	Fast rising and falling time	0.2A	17	Pop L1, L2, L15 Change form FCM-2012C-800 to FBM-10-201209-260T for PE board	0.2	PT
42	No	Change Board ID output level	0.2A	30	Pop R393 100K_0603_1% for Board ID	0.2	PT
43	No	Add off-page reference	0.2A	24	Add off-page on pg24 PCMCIA connector	0.2	PT
44	No	Net in for Rev 0.2A Gerber	0.2B	ALL	Modify Text	0.2A	PT-2
45	Fix DFX issue	C387 effect DIMM door lock	0.2C	21	Add C643 22U_1206 replace C387's layout location and C387 leave DIMM area.	0.2A	PT-2
46	No	Add JP18 PCMCIA connector GND pads	0.2C	24	JP18 pin75,76,77,78,79,80,81,82 connect to GND	0.2A	PT-2
47	No	PM_GMUXSEL for mobil platform to support SpeedStep, desktop platform just GPIO fuction	0.2C	19	Remove PM_GMUXSEL signal net	0.2A	PT-2
48	Fix PIR2 issue	PIR not match schemaitcs	0.2F	22	Pop L39 and depop L7	0.2A	PT-2
49	Fix PIR19 issue	PIR not match schemaitcs	0.2F	24	L5, L6 change to FBM-L11-201209-221LMAT (3A). And Depop L5	0.2A	PT-2
50	Fix PIR23 issue	PIR not match schemaitcs	0.2F	32	Depop C638	0.2A	PT-2
51	Fix PIR24 issue	PIR not match schemaitcs	0.2F	30	RP7 pop for pull up PS2 signal	0.2A	PT-2
52	Fix PIR25 issue	PIR not match schemaitcs	0.2F	33	JP27 pop on GL board for debug and depop on PE board	0.2A	PT-2
53	Fix EE issue item 62	Schematics component's PN not match BOM	0.2G	29	JP13 (TP CONN) PN change to "SP020010910" in schematics to match BOM	0.2A	PT-2
54	Fix EE issue item 63	Schematics component's PN not match BOM	0.2G	29	JP25 (MDC CONN) PN change to "SP02F00410L" in schematics to match BOM	0.2A	PT-2
55	Fix EE issue item 64	Schematics component's PN not match BOM	0.2G	32	JP4 (USB CONN) PN change to "DC23310241L" in schematics to match BOM	0.2A	PT-2
56	3VDDCDA, 3VDDCCK rising time issue	3VDDCDA, 3VDDCCK rising slow on SMBus EA measurement	0.2G	17	R5, R201 change from 10K_0402_5% to 2K_0402_5%	0.3	ST
57	EE issue list item 91	CLK_PCI_ICH timing out of spec	0.2H	18	Pop R349 (22_0402_5%), C480 (10P_0402_50V8K) for CLK_PCI_ICH AC termination	0.3	ST
58	EE issue list item 103	Depop sub thermal sensors for cost save	0.2H	8	Depop U25, U23, C394, C482, R308, R351 and R306	0.3	ST
59	Fix Boardcom 4401L wake up from S3 issue	Fix Boardcom 4401L wake up from S3 issue	0.2H	22	Add R461, R462 and depop R462. Option VESD and VDDBUS power source from +3VS to +3VAUXLAN. C97, C96, C77, C74, C88, C87, C80 bypass +3VWOL	0.3	ST
60	EE issue list item 103	H_BSEL0 of 845PE should get 1.5V at input and CLK chip should be seeing 3.3V with 533MHz CPU	0.2H	15	Add R463 (0_0402_5%) Pop on PE board. R19 move to CPU side and power source +3VS.	0.3	ST

THIS SHEET OF ENGINEERING DRAWING IS THE PROPRIETARY PROPERTY OF COMPAL ELECTRONICS, INC. AND CONTAINS CONFIDENTIAL AND TRADE SECRET INFORMATION. THIS SHEET MAY NOT BE TRANSFERED FROM THE CUSTODY OF THE COMPETENT DIVISION OF R&D DEPARTMENT EXCEPT AS AUTHORIZED BY COMPAL ELECTRONICS, INC. NEITHER THIS SHEET NOR THE INFORMATION IT CONTAINS MAY BE USED BY OR DISCLOSED TO ANY THIRD PARTY WITHOUT PRIOR WRITTEN CONSENT OF COMPAL ELECTRONICS, INC.

Version change list (P.I.R. List)

Item	Fixed Issue	Reason for change	Rev.	PG#	Modify List	B.Ver#	Phase
61	ESD protection on 2nd FAN	ESD protection on 2nd FAN	0.2I	7	Reserve Q63 (SM05) for 2nd FAN ESD protection	0.3	ST
62	Fix EE issue item 105	H_BSEL0 circuit not correct	0.2I	10, 15	Serie resistor R270 for CPU and MCH	0.3	ST
63	No	Change Board ID for ST build	0.2I	30	R394 change from 10K_0603_1% to 24.9K_0603_1%	0.3	ST
64	No	Change for ITP test on PCBA	0.2I	6, 8	Depop R313, R305 and pop R310, R372, R183, R184, R304	0.3	ST
65	Fix EE issue item 126	Using larger cap for high-pot margin	0.2J	22	C211, C212 change package from 1206 size to 1808.	0.3	ST
66	RJ11 ISN failed	EMI team recommend to resolve RJ11 ISN test failed	0.2J	29	Cut a seperated GND for MDC and connect to system GND via a schottky diode. Reserve a jump for connect system and MDC GND.	0.3	ST
67	Fix EE issue item 140	Connect 9C/12C#/8C# to EC GPIO for future 9Cell support if required	0.2K	31, 34	Connect 9C/12C#/8C# from PR162 to U30 pin17 and remove R388	0.3	ST
68	TI TPS793475DBVR damage issue	When power on, there are 1.5A sink current when TPS793475DBVR started	0.2K	29	For power solution, C558 change package size from 0402 to 0603 for value tolerance	0.3	ST
69	Fix EE issue item 136	Add hardware circuit to sense Adapter current and automatically generate PROCHOT to the CPU to generate automatic throttling	0.2K	6	R311 change to 4.7K_0402_5%, H_PROCHOT# connect to PD36	0.3	ST
70	Fix ThermTrip function	When thermal protective resistor PH1 work, SHDN_1632# can't tie to low	0.2K	6	R320 connect to Q59 base, R316 connect to Q59 collector and VL power source. Add Q64 between Q59 and Q62. Q62 change pin1 Drain to connect SHDN_1632#	0.3	ST
71	RJ11 ISN failed	Change solution for ISN failed	0.3	29	Remove PJP9-13 and D47	0.3	ST
72	Fix EE issue item 136	Follow Intel desing guide recommend pull up resistor value	0.3	6	R311 change back to 62_0402_5%	0.3	ST
73	Fix EE issue item 141	Prevent noise issue	0.3	28	Depop R328 for noise prevention	0.3	ST
74	No	For cost save	0.3	7	Depop C148, C150 (470U_D4_2.5VM) and C152 (330U_D2E_2.5VM)	0.3	ST
75	Fix PROTO3 EE issue item 44	Minipci connector pop for PE board only	0.3B	26	Add 2@ symbol for JP24 for PE board pop only	0.3	ST
76	No	Vendor schematics review recommendation	0.3B	22	R35 change from 10K_0402_5% to 1K_0402_5%	0.3	ST
77	Fix PROTO3 EE issue item 45	Remove minipci suport component for GL board cost save	0.3B	26	Remove R405, R399, C600, C596, C613, C612, C599, C598, C609, L35, C616, C610, L36, R401, R403 on GL board	0.3	ST
78	No	Modify material value	0.3C	23,26, 27,28	Change value L11,L30,L31,L35,L36 from BDM21A05 _0805 to BLM21A05 _0805	0.3	ST
79	No	Modify material part number	0.3C	27	U24 STAC9750 change from (SA097500000) to (SA097500010) for both BOM	0.3	ST
80	No	Depop Fan2 Control circuit	0.3C	7	Delete R11,D11,D20,U1,R10,R6,Q1,C234,Q8,JP19	0.3	ST
79	No	EMI require	1.0	17	Pop D1, D3, D18 for EMI requirement	1.0	QT
80	No	Modify Fiduial Mark & Screw Hole value for non pop	1.0	29	Fiduial Mark & Screw Hole value add @ symbol	1.0	QT

THIS SHEET OF ENGINEERING DRAWING IS THE PROPRIETARY PROPERTY OF COMPAL ELECTRONICS, INC. AND CONTAINS CONFIDENTIAL AND TRADE SECRET INFORMATION. THIS SHEET MAY NOT BE TRANSFERED FROM THE CUSTODY OF THE COMPETENT DIVISION OF R&D DEPARTMENT EXCEPT AS AUTHORIZED BY COMPAL ELECTRONICS, INC. NEITHER THIS SHEET NOR THE INFORMATION IT CONTAINS MAY BE USED BY OR DISCLOSED TO ANY THIRD PARTY WITHOUT PRIOR WRITTEN CONSENT OF COMPAL ELECTRONICS, INC.

Version change list (P.I.R. List)

Item	Fixed Issue	Reason for change	Rev.	PG#	Modify List	B.Ver#	Phase
1	CPU_CORE can't power up	Pin7 of PU16 can't be used as on/off control pin	0.1B	40	1. Change VCC power source of PU16 from +5VALWP to +5VS	0.1	SST
2	current limited is not up to 60A	Current limtited is about 37A while PH6,PH7,PH8 is 1.5K that is not enough for design target.Because we don't use PTC resistor on PCB now, the value must be tuned later.	0.1B	40	1. Change PH6,PH7,PH8 from 1.5K_0603_5% to 3K_0603_1%	0.1	SST
3	Turn on voltage of PQ19 is not eonugh	Vgs of PQ19 is 2V while PR72 is 47K. That is not enough. While PR72 is 22K, the Vgs can be improved to 2.5V.	0.1B	35	1. Change PR72 from 47K_0402_5% to 22K_0402_5%	0.1	SST
4	current rating is not enough.	FBM-L11-322513-151LMAT is 5A that is not enough.So FBM -L18-453215-900LMA90T1812 is 9A that is better.	0.1B	35	1. Change PL8 from FBM-L11-322513-151LMAT to FBM -L18-453215-900LMA90T1812.	0.2	PT
5	Fix noise issue	On SST PCB, we can sound some noise due to PC77, the cernamic capacitor has sounded noise with thinner type.	0.1C	36	1. Change PC77 from 2.2U_1206_25V to 4.7U_1210_25V	0.2	PT
6	Fix CPU_CORE Transient Response fail	The transient response is too slow. We must to tune feedback resistor and capacitor to fix it.	0.1E	40	1. Change PR249 from 3.48K_0603_1% to 5.76K_0603_1%. 2. Change PR257 from 49.9_0603_1% to 1.1K_0603_1% 3. Populate PC172 68PF_0603_50V.	0.2	PT
7	SDREF output voltage is over spec.	Add bypass capacitor pallel pin18 of ISL6225	0.1E	38	Populate PC218 470P_0603_50V7K	0.2	PT
8	PG of CM28423 has a glitch while VCC is ready and VR_ON is float	Add pulldown resistor tie to GND while VR_ON is float that can be made sure the logic is low.	0.1E	40	Add PR301 100K_0603_1%	0.2	PT
9	Change VCC power source of PU15, PU17, PU19 from +5VALWP to +5VS	Negative voltage was observed on +5VALWP when system powered off	0.1E	40	1. Change VCC power source of PU15, PU17, PU19 from +5VALWP to +5VS	0.2	PT
10	Prevent abnoral function OVP caused by ISL6219 while system powerwd off ; bouble pulses was observed at output PW1, PW2, PWM3 of ISL6219	ISL6219 caused OVP when on/off pin changed from high to low level	0.1E	40	1. Add PQ82 2N7002 2. Change PR232 from 5.1_0603_5% to 10K_0603_5% 3. Change PC168 from 1U_0805_25V to 0.01U_0603_50V. 4. Depop PR251, PR270, PC183, PC194 5. Tie the EN pin of PU15, PU17, PU19 to Pin1 of PQ82	0.2	PT
11	Fine-tune current sharing of CPU VR phase1,2,3 to have thermal balance	uneven current sharing found	0.1E	40	1. Change PH6, PH7, PH8 form 3K_0603_1% to 0_0603_5% 2. Change PR245 from 0_0603_5% to 1.96K_0603_1% 3. Change PR263 from 0_0603_5% to 1.43K_0603_1%. 4. Change PR276 from 0_0603_5% to 1.5K_0603_1%	0.2	PT
12	Fine-tune CPU load-line with NTC	Fine-tune CPU load-line with NTC	0.1E	40	1. Keep PR268 nonpop 2. Change PR256 from 2K_0603_1% to 1.74K_0603_1% 3. Change PR297 from 0_0603_5% to 1.15K_0603_1%. 4. Change PH5from depop to 4.7K_0603_1% 5. Change PR298 from depop to 681_0603_1% 6. Change PR257 from 49.9_0603_1% to 909_0603_1% 7. Change PC179 from 3900P_0603_50V to 5.6N_0603_50V 8. Change PR249 from 3.48K_0603_5% to 7.5K_0603_1% 7. Change PC171 from 6800P_0603_50V to 5.6N_0603_50V 8. Change PC172 from depop to 47P_0603_50V	0.2	PT
13	Audio noise found	Still find root cause	0.1E	35, 36, 38, 40	1. reserve 15U_D_25V capacitors on PC226-PC235,	0.2	PT
14	PC212 location space change	requested by ME to put a connector around	0.1E	38	1. change the size of PC212 from D size to 0805 and pop 4.7U_0805_10V	0.2	PT
15	Remove PD5	no possibilty to have a reverse voltage at Vin when adapter plug-in because of the DC-jack orientation structure	0.2C	34	1.delete PD5 from schematics	0.2A	PT-2
16	Prevent PU14 from burn out	When pin1 (GND pin) of DC-jack PCN1 disconnected from B/M (damaged by force from outside), there is a large current going through PU14 resulted in PU14 damaged	0.2C	39	Add PR302 10K_0603_5%	0.2A	PT-2

THIS SHEET OF ENGINEERING DRAWING IS THE PROPRIETARY PROPERTY OF COMPAL ELECTRONICS, INC. AND CONTAINS CONFIDENTIAL AND TRADE SECRET INFORMATION. THIS SHEET MAY NOT BE TRANSFERED FROM THE CUSTODY OF THE COMPETENT DIVISION OF R&D DEPARTMENT EXCEPT AS AUTHORIZED BY COMPAL ELECTRONICS, INC. NEITHER THIS SHEET NOR THE INFORMATION IT CONTAINS MAY BE USED BY OR DISCLOSED TO ANY THIRD PARTY WITHOUT PRIOR WRITTEN CONSENT OF COMPAL ELECTRONICS, INC.

Item	Fixed Issue	Reason for change	Rev.	PG#	Modify List	B.Ver#	Phase
17	100MHz EMI broad-band over spec.	Improve 100MHz EMI broad-band	0.2E	34	Add a FBM-L18-453215-900-LMA90T_1812 bead on PL7	0.2A	PT-2
18	100MHz EMI broad-band over spec.	Improve 100MHz EMI broad-band	0.2H	34	1. Change PL6,PL7 from FBM-L18-453215-900-LMA90T_1812 to MCK4532800YAT_1812 2. Add PL4 MBH2012102YZT_0805 3. Change PC45 from 100P to 560P, PC46 from 1000P to 12P,PC47 from 100P to 12P and PC48 from 1000P to 560P	0.3	ST
19	Precharge function has some bug, while AC Adapter plug in firt time	Precharge can reduce surge current from AC adapter,while Adapter plugged in	0.2H	34	1. Change PR51 from 1M to 2.2M,PR55 from 215K to 191K. 2. Change PR54 from 10K to 34K,add PR32 66.5K. 3. Change PC51 from 0.1U_16V to 1000P_50V. 4. Change PC50 from 1000P_50V to 0.1U_16V. 5. Change net +5VP and RTCVREF to VL. 6. Change PR113 from 47K_0402_5% to 0_0402_5%. 7. De-pop PC111 and change PC158 from 0.1U_16V to 0.47U_16V.	0.3	ST
20	Power rating of 0.02_2010 is not enough.	rating power of 0.02_2010 is 0.5W that is very poor for 90W adpater	0.2H	35	1. Change PR65 from 0.02_2010_1% to 0.02_2512_1%.	0.3	ST
21	Power open issue	Change size of thermal resistor and cost down	0.2H	36	Change PH1 from 10K_0805_1% to 10K_0603_1%.	0.3	ST
22	Power good giltch issue in ISL6225	The giltch occurs while secondary PWM is enabled that effects system boots up	0.2H	38	1. Add PR31 1K_0402_5%.. 2. De-pop PR294	0.3	ST
23	Fix open issue #137	DELL don't aprove item22 solution, prefer using new version ISL6225	0.2J	38	1. De-pop PR31 1K_0402_5%. 2. De-pop PR294 0_0402_5%. 3. Add PR30 0_0402_5%.	0.3	ST
24	Fix open issue #124	Fix open issue #124 and using ISL6219A	0.2J	40	1. Change PR232 from 10K_0603_5% to 5.1_0603_5%. 2. Populate PR251 and PR270 5.1_0603_5% 3. Populate PC183 and PC194 0.01U_0603_50V. 4. De-pop PQ82,PD31,PD,32	0.3	ST
25	Fix ISN fail issue	Fix ISN fail with 200KHz	0.2J	35	1. Change PR81 from 66.5K_0603_1% to 47K_0603_1% 2. Change PC55 and PC56 from 4.7U_1210_25V to 10U_1210_25V 3. Change PL9 from 15UH to 22UH	0.3	ST
26	Fix open issue #123	Rds(on) of SI4835DY is too high,change PQ14,15,16 to SI4825DY for power stress	0.2J	35	Change PQ14,PQ15,and PQ16 from SI4835DY to SI4825DY	0.3	ST
27	Adapter shut down while running P4MaxPower 100%	Adapter current over 5.5A 4 sec while running P4MaxPower 100%	0.3	37	1. add PR303, PR306 47K_0402_1%. 2. add PR304 1M_0402_1%. 3. add PR305 226K_0402_1% 4. add PR307 147K_0402_1% 5. add PR308 100K_0402_1% 6. add PC236 0.01U_0603_50V 7. add PC239 0.1U_0603_16V 8. add PC238 1000P_0402_50V 9. add PQ83, PQ84 2N7002 10. add PU21 LM393A	0.3	ST
28	Modify thermal protect temp. from 95C to 87C	Based on thermal team requirement	0.3A	36	1. ChangePR119 from 21K_0603_1% to 17.8K_0603_1% 2. Change PR117 from 1.74K_0603_1% to 2.05K_0603_1%	0.3	ST

THIS SHEET OF ENGINEERING DRAWING IS THE PROPRIETARY PROPERTY OF COMPAL ELECTRONICS, INC. AND CONTAINS CONFIDENTIAL AND TRADE SECRET INFORMATION. THIS SHEET MAY NOT BE TRANSFERED FROM THE CUSTODY OF THE COMPETENT DIVISION OF R&D DEPARTMENT EXCEPT AS AUTHORIZED BY COMPAL ELECTRONICS, INC. NEITHER THIS SHEET NOR THE INFORMATION IT CONTAINS MAY BE USED BY OR DISCLOSED TO ANY THIRD PARTY WITHOUT PRIOR WRITTEN CONSENT OF COMPAL ELECTRONICS, INC.

Version change list (P.I.R. List)

Item	Fixed Issue	Reason for change	Rev.	PG#	Modify List	B.Ver#	Phase
29	modify compension for reduce output capacitor	modify compension for reduce output capacitor	0.3A	40	1. De-pop PR257 and PC179. 2. Change PC171 from 5.6N_0603_50V to 15N_0603_50V 3. Change PC172 form 47P_0603_50V to 150P_0603_50V 4. Change PR249 from 7.5K_0603_1% to 10K_0603_1%	0.3	ST
30	Fix item25 about ISN test without changing inductor	Fix item25 about ISN test without changing inductor	0.3A	35	1. Change PL9 from 22UH_SPC-1205P-220A to 15UH_SPC-1204P-150	0.3	ST
31	Capacitor DFX issues	Component layout pad overlap (reservated for noise issue) causes some components shifting when pass the re-flow	0.3D	35 36 38 40	remove PC226, PC227, PC228, PC229, PC230, PC231, PC232, PC233, PC234, PC235	1.0	QT
32	Noise issue in B+ power	Add reservated caps. back for noise issue	0.3E	35 36 38 40	reserve PC226, PC227, PC228, PC229, PC230, PC231, PC232, PC233, PC234, PC235	1.0	QT

THIS SHEET OF ENGINEERING DRAWING IS THE PROPRIETARY PROPERTY OF COMPAL ELECTRONICS, INC. AND CONTAINS CONFIDENTIAL AND TRADE SECRET INFORMATION. THIS SHEET MAY NOT BE TRANSFERED FROM THE CUSTODY OF THE COMPETENT DIVISION OF R&D DEPARTMENT EXCEPT AS AUTHORIZED BY COMPAL ELECTRONICS, INC. NEITHER THIS SHEET NOR THE INFORMATION IT CONTAINS MAY BE USED BY OR DISCLOSED TO ANY THIRD PARTY WITHOUT PRIOR WRITTEN CONSENT OF COMPAL ELECTRONICS, INC.