Compal Confidential

KBYF0 Schematics Document

AMD Griffin Processor with RS780M+SB700

(With ATI MXM/B)

2009-01-22

REV:0.3

ZZZ1

PCB

DA60000B600-*

Security Classification	Compal Secret Data		
Issued Date	2008/11/03	Deciphered Date	2009/11/03

THIS SHEET OF ENGINEERING DRAWING IS THE PROPRIETARY PROPERTY OF COMPAL ELECTRONICS, INC. AND CONTAINS CONFIDENTIAL AND TRADE SECRET INFORMATION. THIS SHEET MAY NOT BE TRANSFERED FROM THE CUSTODY OF THE COMPETENT DIVISION OF R&D DEPARTMENT EXCEPT AS AUTHORIZED BY COMPAL ELECTRONICS, INC. NEITHER THIS SHEET NOR THE INFORMATION IT CONTAINS MAY BE USED BY OR DISCLOSED TO ANY THIRD PARTY WITHOUT PRIOR WRITTEN CONSENT OF COMPAL ELECTRONICS, INC.

Compal Electronics, Inc.

Title: Cover Page

Size	Document Number	Rev
B	KBYF0 LA-5051P	0.3

Date: Tuesday, February 03, 2009 | Sheet 1 of 46

Compal Confidential

Model Name : KBYF0
File Name: LA-5051P

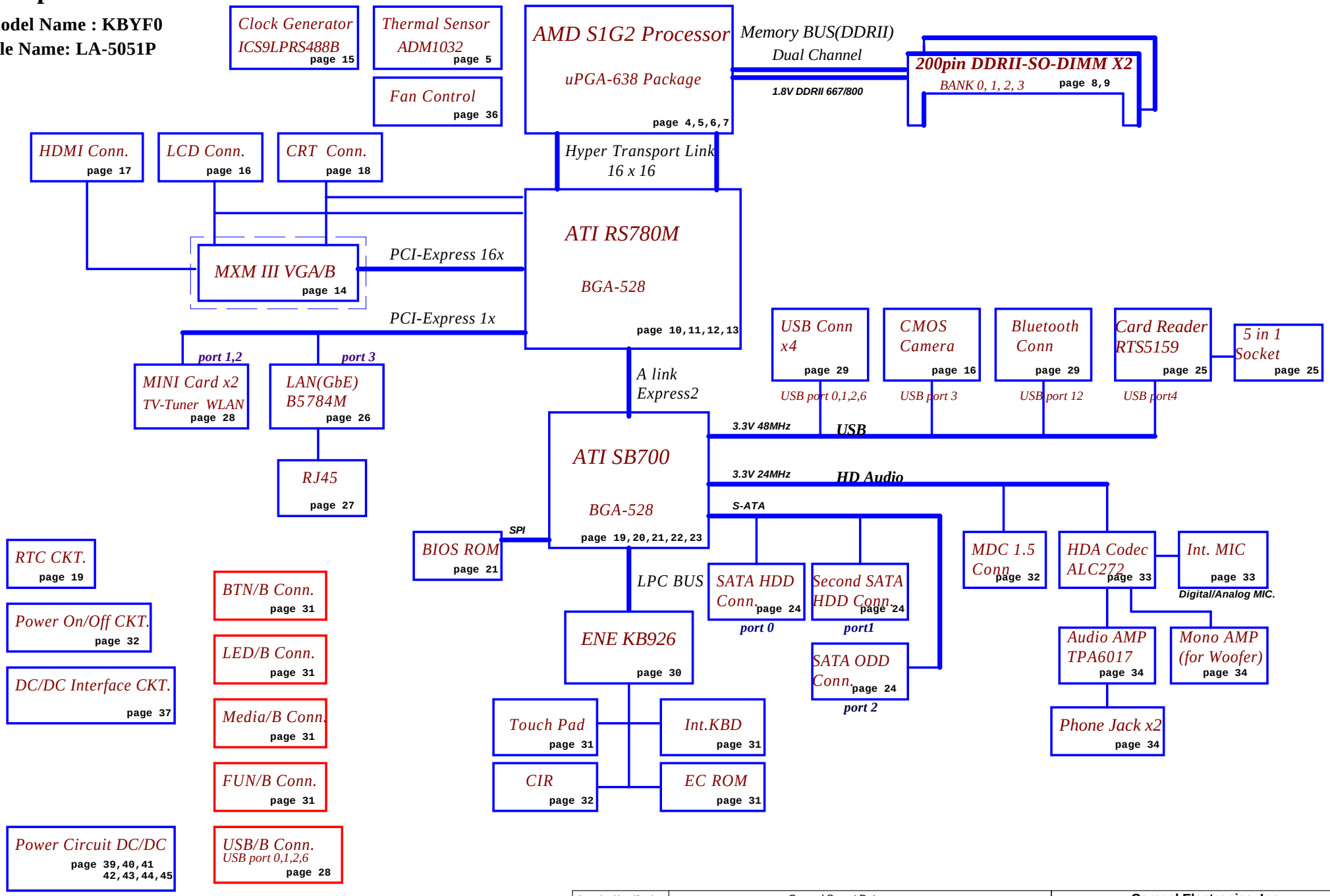

Security Classification	Compal Secret Data		
Issued Date	2008/11/03	Deciphered Date	2009/11/03

THIS SHEET OF ENGINEERING DRAWING IS THE PROPRIETARY PROPERTY OF COMPAL ELECTRONICS, INC. AND CONTAINS CONFIDENTIAL AND TRADE SECRET INFORMATION. THIS SHEET MAY NOT BE TRANSFERED FROM THE CUSTODY OF THE COMPETENT DIVISION OF R&D DEPARTMENT EXCEPT AS AUTHORIZED BY COMPAL ELECTRONICS, INC. NEITHER THIS SHEET NOR THE INFORMATION IT CONTAINS MAY BE USED BY OR DISCLOSED TO ANY THIRD PARTY WITHOUT PRIOR WRITTEN CONSENT OF COMPAL ELECTRONICS, INC.

Compal Electronics, Inc.

Title: Block Diagrams

Size: B | Document Number: KBKC0 LA-5051P | Rev: 0.3

Date: Tuesday, February 03, 2009 | Sheet 2 of 46

Voltage Rails

Power Plane	Description	S1	S3	S5
VIN	Adapter power supply (19V)	N/A	N/A	N/A
B+	AC or battery power rail for power circuit.	N/A	N/A	N/A
+CPU_CORE_0	Core voltage for CPU	ON	OFF	OFF
+CPU_CORE_1	Core voltage for CPU	ON	OFF	OFF
+CPU_CORE_NB	Core voltage for CPU	ON	OFF	OFF
+0.9V	0.9V switched power rail for DDR terminator	ON	ON	OFF
+1.1VS	1.05V switched power rail	ON	OFF	OFF
+1.2V_HT	1.25V switched power rail	ON	OFF	OFF
+NB_CORE	1.0V~1.1V switched power rail for NB VDDC	ON	OFF	OFF
+1.5VS	1.5V power rail for PCIE Card	ON	OFF	OFF
+1.8V	1.8V power rail for CPU VDDIO and DDR	ON	ON	OFF
+1.8VS	1.8V switched power rail	ON	OFF	OFF
+2.5VS	2.5V for CPU_VDDA and MXM/B	ON	OFF	OFF
+3VALW	3.3V always on power rail	ON	ON	ON*
+3V_LAN	3.3V power rail for LAN	ON	ON	ON
+3VS	3.3V switched power rail	ON	OFF	OFF
+5VALW	5V always on power rail	ON	ON	ON*
+5VS	5V switched power rail	ON	OFF	OFF
+VSB	VSB always on power rail	ON	ON	ON*
+RTCVCC	RTC power	ON	ON	ON

Note : ON* means that this power plane is ON only with AC power available, otherwise it is OFF.

External PCI Devices

Device	IDSEL#	REQ#/GNT#	Interrupts
No PCI device			

EC SM Bus1 address

Device	Address
Smart Battery	0001 011X b
EEPROM(24C16/02)	1010 000X b
MXM GMT G781-1	1001 101X b

EC SM Bus2 address

Device	Address
ADI ADM1032	1001 100X b
CPU SB	1001 101X b

SB700 SM Bus 0 address

Device	Address
Clock Generator (ICS9LPRS365)	1101 001Xb
DDR DIMM0	1001 000Xb
DDR DIMM2	1001 010Xb
Minicard	
Minicard	

SB700 SM Bus 1 address

Device	Address
Lan	

STATE \ SIGNAL	SLP_S1#	SLP_S3#	SLP_S4#	SLP_S5#	+VALW	+V	+VS	Clock
Full ON	HIGH	HIGH	HIGH	HIGH	ON	ON	ON	ON
S1(Power On Suspend)	LOW	HIGH	HIGH	HIGH	ON	ON	ON	LOW
S3 (Suspend to RAM)	LOW	LOW	HIGH	HIGH	ON	ON	OFF	OFF
S4 (Suspend to Disk)	LOW	LOW	LOW	HIGH	ON	OFF	OFF	OFF
S5 (Soft OFF)	LOW	LOW	LOW	LOW	ON	OFF	OFF	OFF

Board ID / SKU ID Table for AD channel

Vcc	3.3V +/- 5%
Ra/Rc/Re	100K +/- 5%

Board ID	Rb / Rd / Rf	V_{AD_BID} min	V_{AD_BID} typ	V_{AD_BID} max
0	0	0 V	0 V	0 V
1	8.2K +/- 5%	0.216 V	0.250 V	0.289 V
2	18K +/- 5%	0.436 V	0.503 V	0.538 V
3	33K +/- 5%	0.712 V	0.819 V	0.875 V
4	56K +/- 5%	1.036 V	1.185 V	1.264 V
5	100K +/- 5%	1.453 V	1.650 V	1.759 V
6	200K +/- 5%	1.935 V	2.200 V	2.341 V
7	NC	2.500 V	3.300 V	3.300 V

BOARD ID Table

Board ID	PCB Revision
0	0.1
1	0.2
* 2	0.3 0.4 1.0
3	
4	
5	
6	
7	

BTO Option Table

BTO Item	BOM Structure
Discrete	VGA@
UMA	UMA@

PROJECT ID Table

Board ID	PROJECT
0	KBKC0 (SJM70)
1	KBYF0 (SJV70)
2	
3	
4	
5	
6	
7	

Security Classification	Compal Secret Data		
Issued Date	2008/11/03	Deciphered Date	2009/11/03

THIS SHEET OF ENGINEERING DRAWING IS THE PROPRIETARY PROPERTY OF COMPAL ELECTRONICS, INC. AND CONTAINS CONFIDENTIAL AND TRADE SECRET INFORMATION. THIS SHEET MAY NOT BE TRANSFERED FROM THE CUSTODY OF THE COMPETENT DIVISION OF R&D DEPARTMENT EXCEPT AS AUTHORIZED BY COMPAL ELECTRONICS, INC. NEITHER THIS SHEET NOR THE INFORMATION IT CONTAINS MAY BE USED BY OR DISCLOSED TO ANY THIRD PARTY WITHOUT PRIOR WRITTEN CONSENT OF COMPAL ELECTRONICS, INC.

Compal Electronics, Inc.

Title: Notes List

Size: B | Document Number: KBYF0 LA-5051P | Rev: 0.3

Date: Tuesday, February 03, 2009 | Sheet 3 of 46

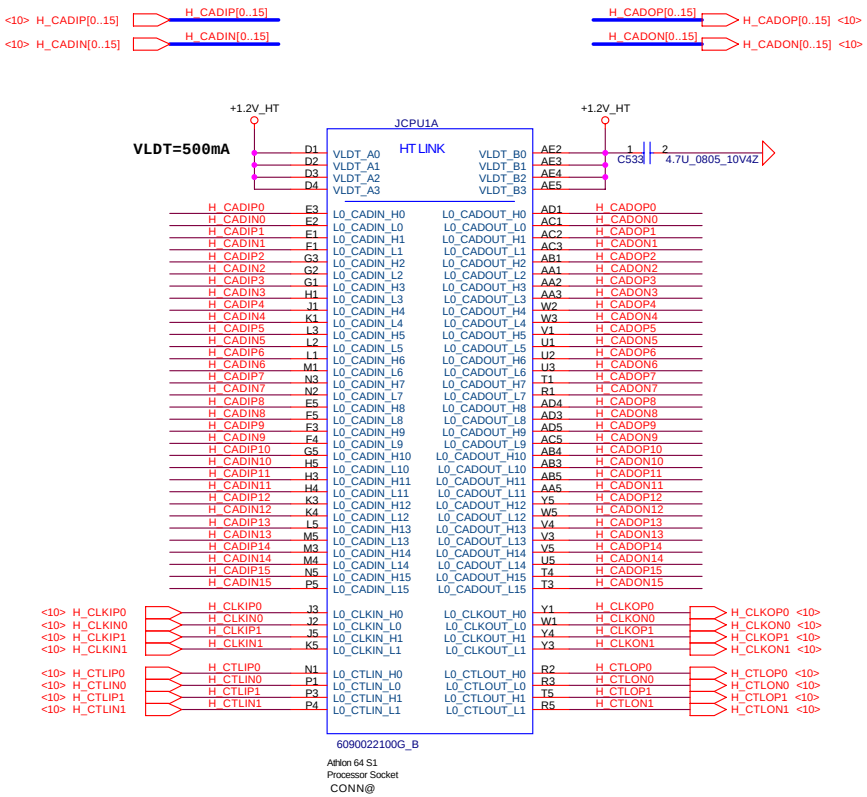

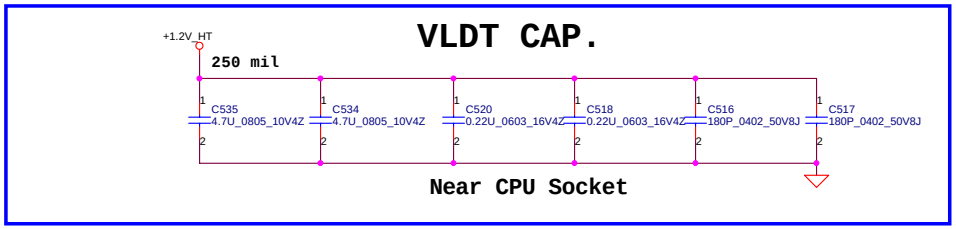

Security Classification	Compal Secret Data		
Issued Date	2008/11/03	Deciphered Date	2009/11/03

THIS SHEET OF ENGINEERING DRAWING IS THE PROPRIETARY PROPERTY OF COMPAL ELECTRONICS, INC. AND CONTAINS CONFIDENTIAL AND TRADE SECRET INFORMATION. THIS SHEET MAY NOT BE TRANSFERED FROM THE CUSTODY OF THE COMPETENT DIVISION OF R&D DEPARTMENT EXCEPT AS AUTHORIZED BY COMPAL ELECTRONICS, INC. NEITHER THIS SHEET NOR THE INFORMATION IT CONTAINS MAY BE USED BY OR DISCLOSED TO ANY THIRD PARTY WITHOUT PRIOR WRITTEN CONSENT OF COMPAL ELECTRONICS, INC.

Compal Electronics, Inc.

Title: **AMD CPU S1G2 HT I/F**

Size: Custom | Document Number: **KBYF0 LA-5051P** | Rev: 0.3

Date: Tuesday, February 03, 2009 | Sheet 4 of 46

Processor DDR2 Memory Interface

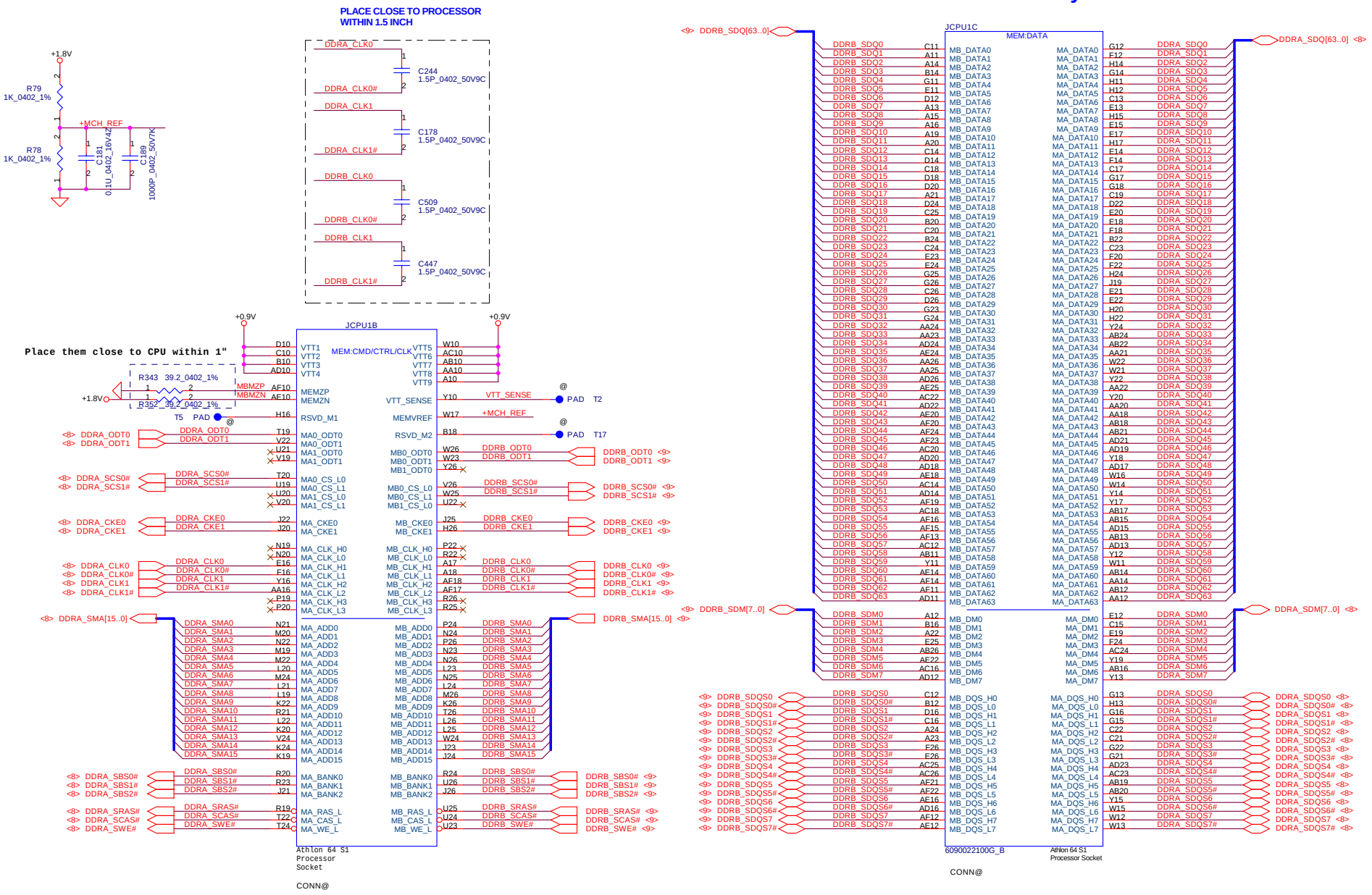

Security Classification	Compal Secret Data		
Issued Date	2008/11/03	Deciphered Date	2009/11/03

THIS SHEET OF ENGINEERING DRAWING IS THE PROPRIETARY PROPERTY OF COMPAL ELECTRONICS, INC. AND CONTAINS CONFIDENTIAL AND TRADE SECRET INFORMATION. THIS SHEET MAY NOT BE TRANSFERED FROM THE CUSTODY OF THE COMPETENT DIVISION OF R&D DEPARTMENT EXCEPT AS AUTHORIZED BY COMPAL ELECTRONICS, INC. NEITHER THIS SHEET NOR THE INFORMATION IT CONTAINS MAY BE USED BY OR DISCLOSED TO ANY THIRD PARTY WITHOUT PRIOR WRITTEN CONSENT OF COMPAL ELECTRONICS, INC.

Compal Electronics, Inc.

Title: **AMD CPU S1G2 DDRII I/F**

Size: Custom | Document Number: **KBYF0 LA-5051P** | Rev: 0.3

Date: Tuesday, February 03, 2009 | Sheet 5 of 46

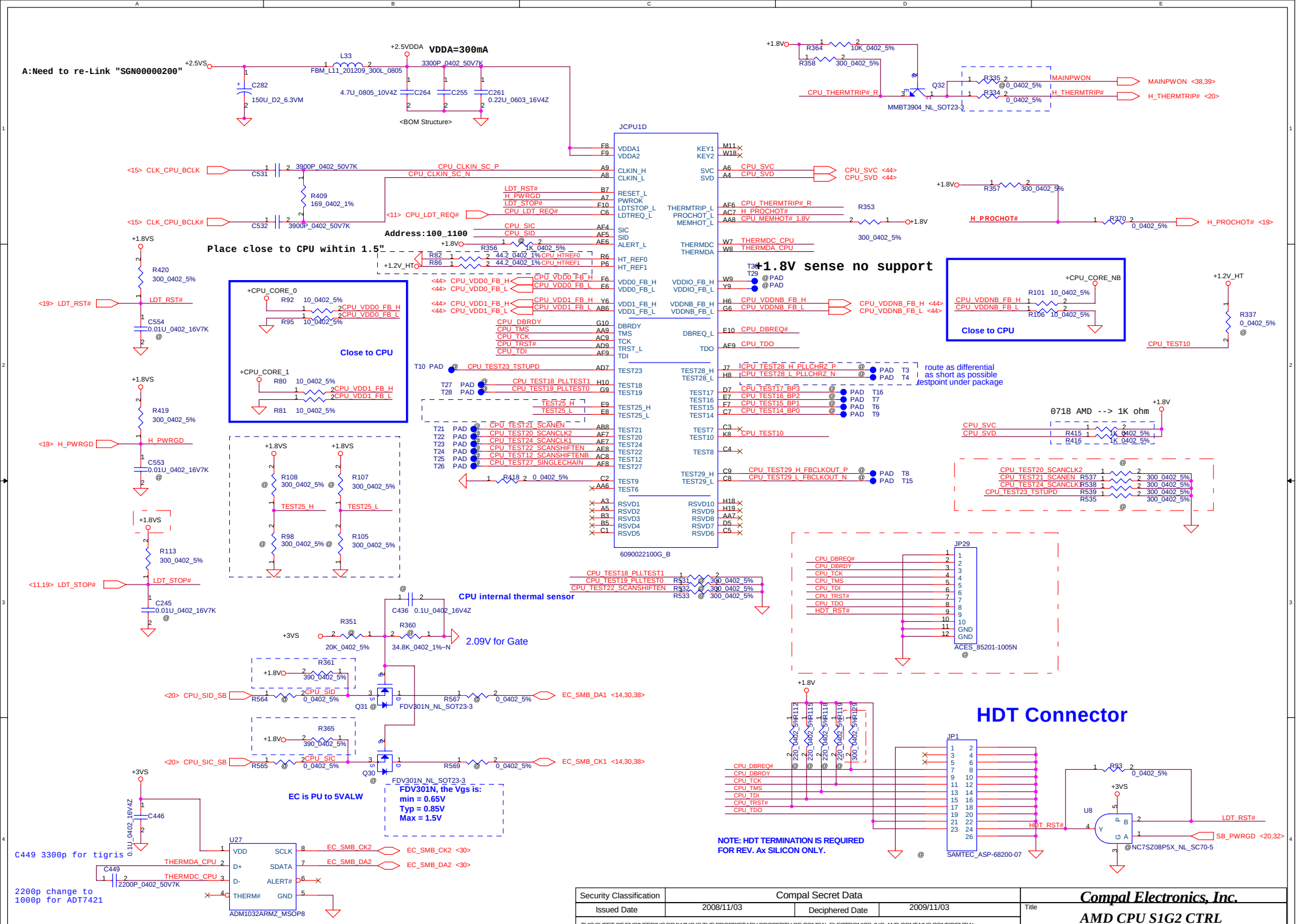

Security Classification	Compal Secret Data		
Issued Date	2008/11/03	Deciphered Date	2009/11/03

THIS SHEET OF ENGINEERING DRAWING IS THE PROPRIETARY PROPERTY OF COMPAL ELECTRONICS, INC. AND CONTAINS CONFIDENTIAL AND TRADE SECRET INFORMATION. THIS SHEET MAY NOT BE TRANSFERED FROM THE CUSTODY OF THE COMPETENT DIVISION OF R&D DEPARTMENT EXCEPT AS AUTHORIZED BY COMPAL ELECTRONICS, INC. NEITHER THIS SHEET NOR THE INFORMATION IT CONTAINS MAY BE USED BY OR DISCLOSED TO ANY THIRD PARTY WITHOUT PRIOR WRITTEN CONSENT OF COMPAL ELECTRONICS, INC.

Compal Electronics, Inc.

Title: AMD CPU S1G2 CTRL

Size: Custom | Document Number: KBYF0 LA-5051P | Rev: 0.3

Date: Tuesday, February 03, 2009 | Sheet 6 of 46

VDD(+CPU_CORE) decoupling.

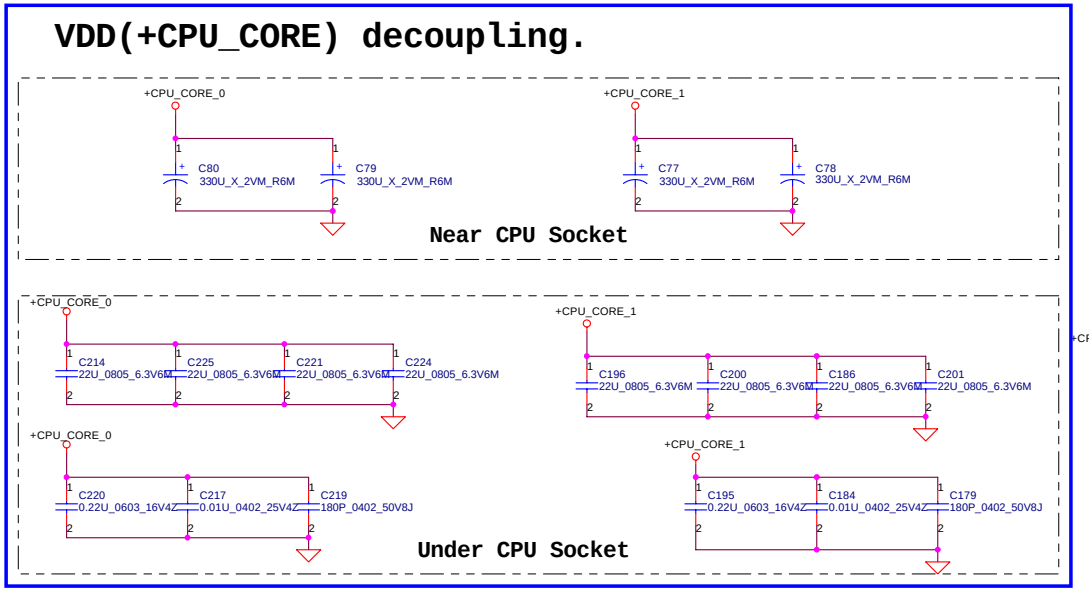

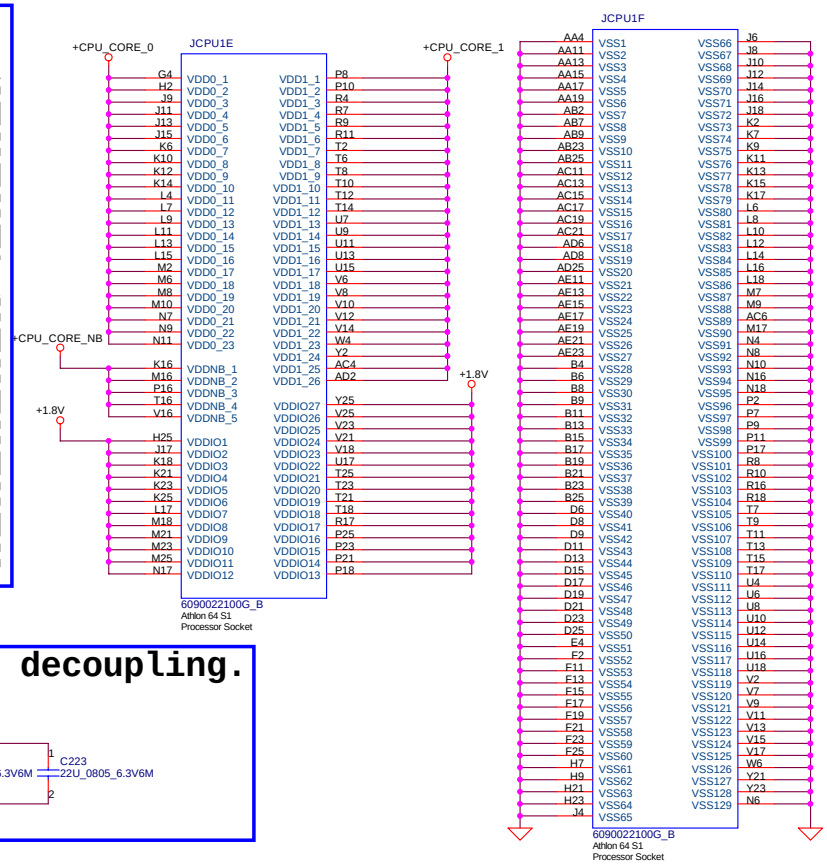

VDDIO decoupling.

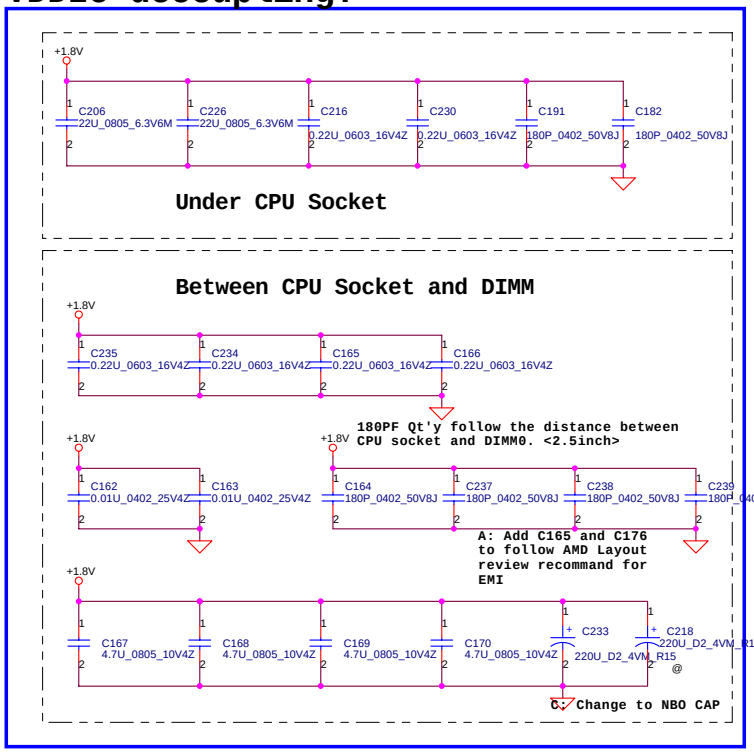

+CPU_CORE_NB decoupling.

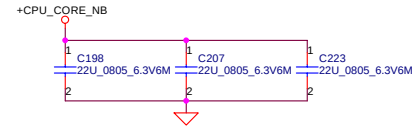

VTT decoupling.

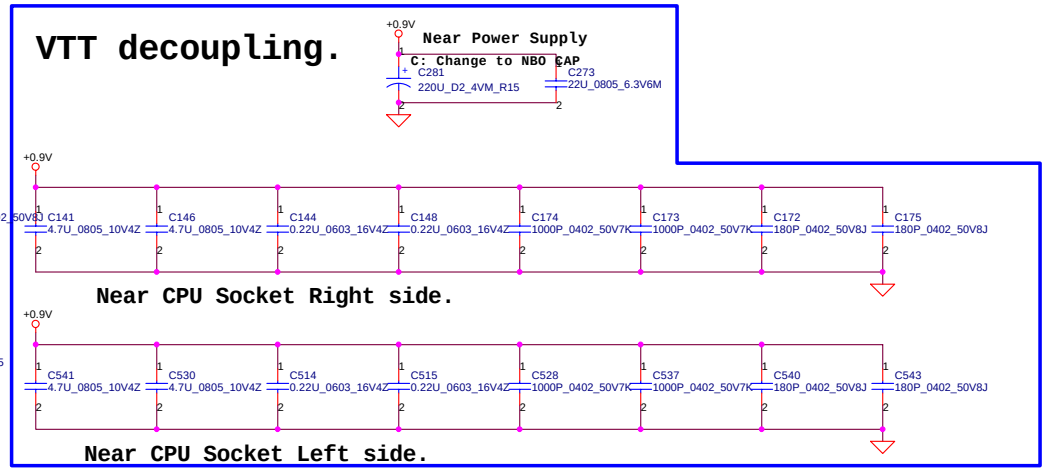

Security Classification	Compal Secret Data		
Issued Date	2008/11/03	Deciphered Date	2009/11/03

THIS SHEET OF ENGINEERING DRAWING IS THE PROPRIETARY PROPERTY OF COMPAL ELECTRONICS, INC. AND CONTAINS CONFIDENTIAL AND TRADE SECRET INFORMATION. THIS SHEET MAY NOT BE TRANSFERRED FROM THE CUSTODY OF THE COMPETENT DIVISION OF R&D DEPARTMENT EXCEPT AS AUTHORIZED BY COMPAL ELECTRONICS, INC. NEITHER THIS SHEET NOR THE INFORMATION IT CONTAINS MAY BE USED BY OR DISCLOSED TO ANY THIRD PARTY WITHOUT PRIOR WRITTEN CONSENT OF COMPAL ELECTRONICS, INC.

Compal Electronics, Inc.

Title: AMD CPU S1G2 PWR & GND

Size: Custom | Document Number: KBYF0 LA-5051P | Rev: 0.3

Date: Tuesday, February 03, 2009 | Sheet 7 of 46

RESERVE
+V_DDR_MCH_REF BUFFER CIRCUIT

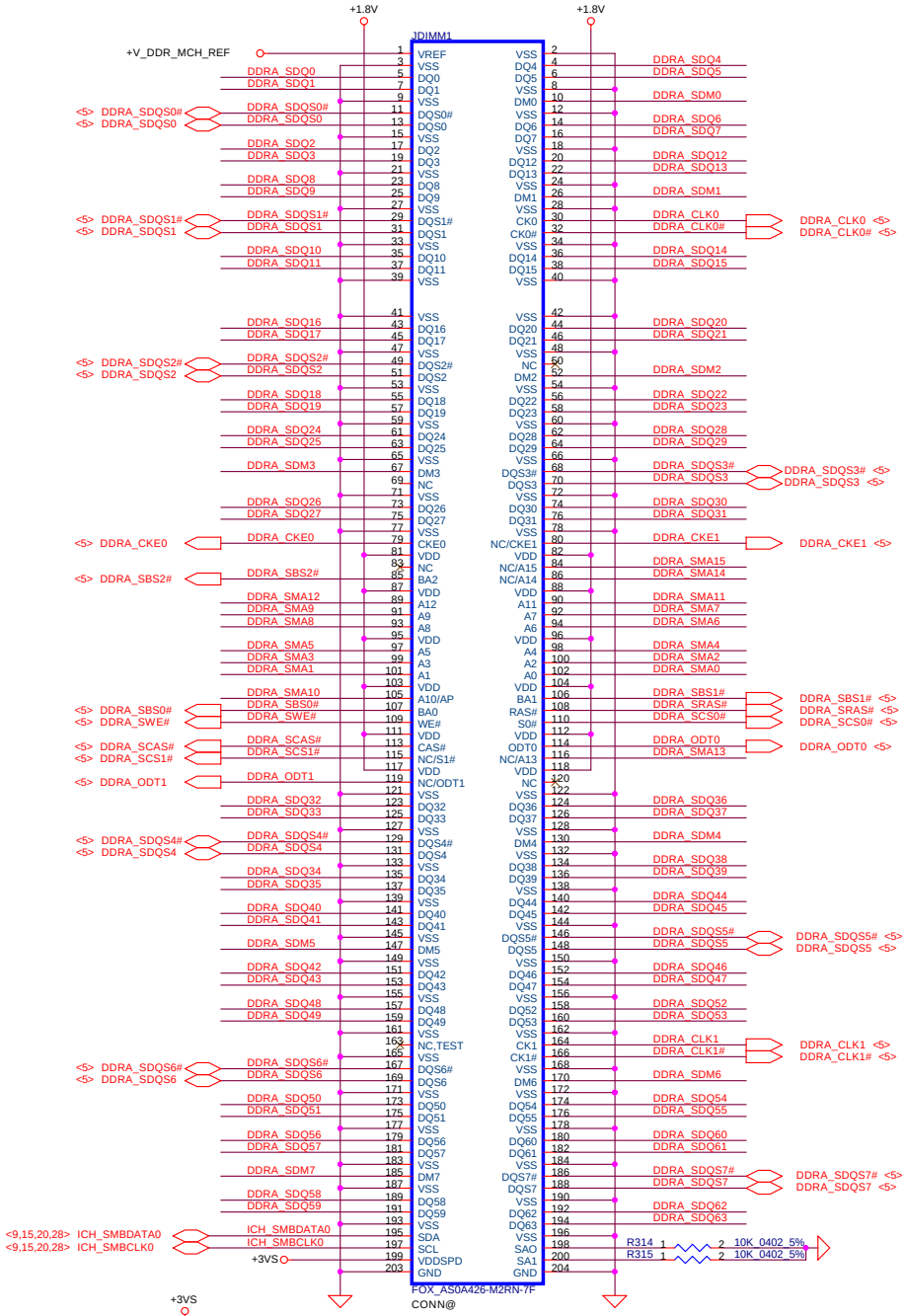

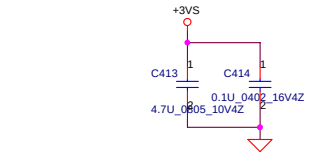

DIMM1 REV H:5.2mm (BOT)

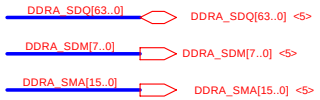

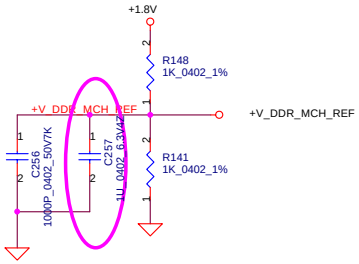

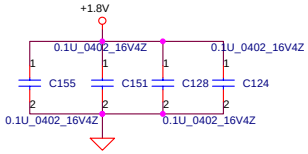

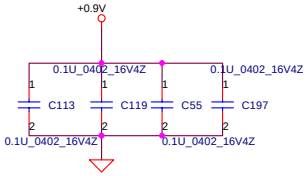

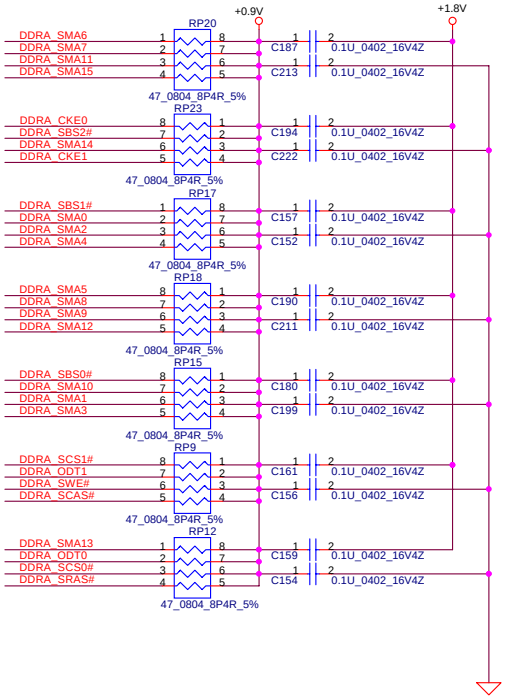

Security Classification	Compal Secret Data		
Issued Date	2008/11/03	Deciphered Date	2009/11/03

THIS SHEET OF ENGINEERING DRAWING IS THE PROPRIETARY PROPERTY OF COMPAL ELECTRONICS, INC. AND CONTAINS CONFIDENTIAL AND TRADE SECRET INFORMATION. THIS SHEET MAY NOT BE TRANSFERED FROM THE CUSTODY OF THE COMPETENT DIVISION OF R&D DEPARTMENT EXCEPT AS AUTHORIZED BY COMPAL ELECTRONICS, INC. NEITHER THIS SHEET NOR THE INFORMATION IT CONTAINS MAY BE USED BY OR DISCLOSED TO ANY THIRD PARTY WITHOUT PRIOR WRITTEN CONSENT OF COMPAL ELECTRONICS, INC.

Compal Electronics, Inc.

Title: DDRII SO-DIMM 0

Size: Custom | Document Number: KBYF0 LA-5051P | Rev: 0.3

Date: Tuesday, February 03, 2009 | Sheet 8 of 46

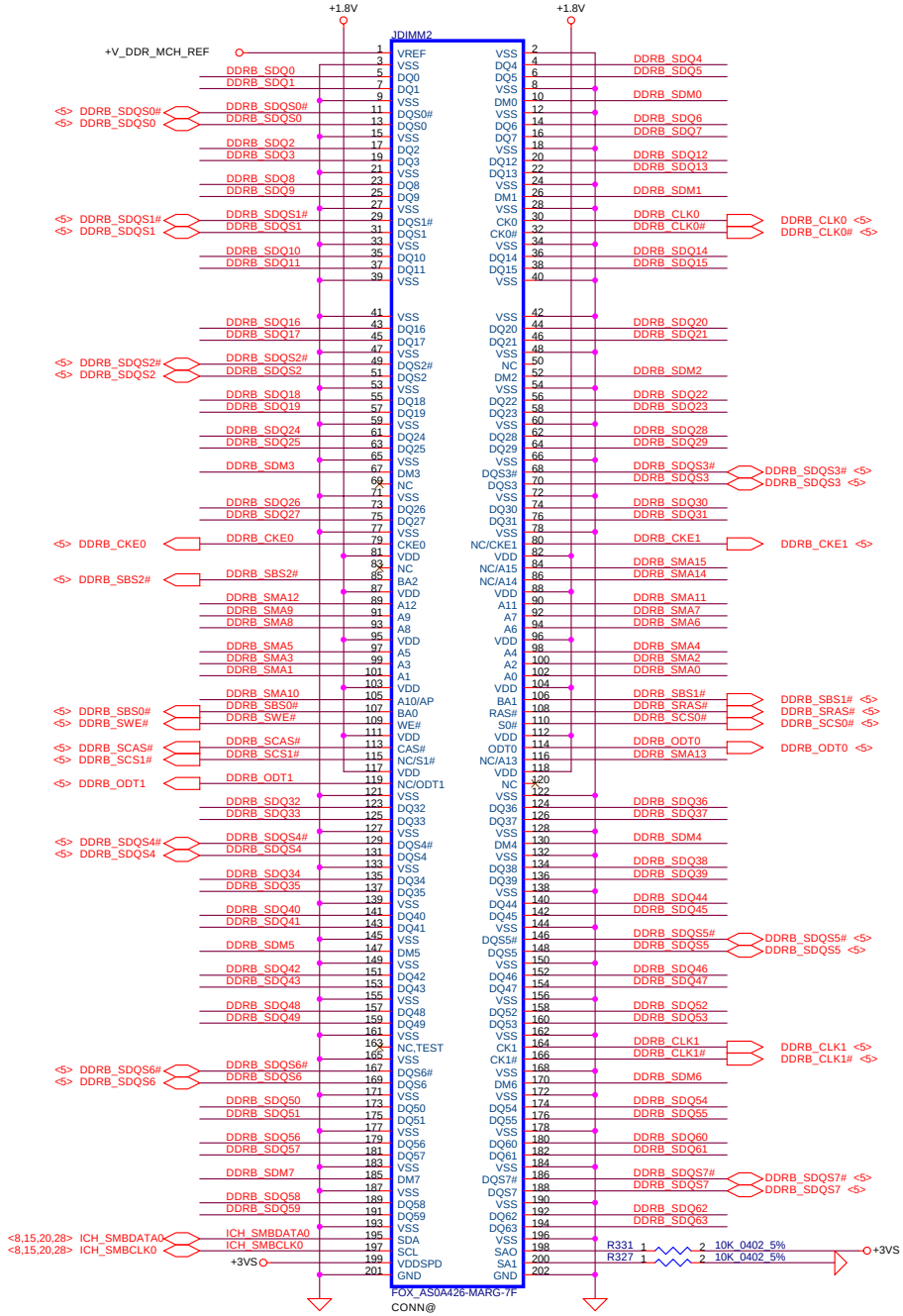

DIMM1 REV H:9.2mm (BOT)

Security Classification	Compal Secret Data		
Issued Date	2008/11/03	Deciphered Date	2009/11/03

THIS SHEET OF ENGINEERING DRAWING IS THE PROPRIETARY PROPERTY OF COMPAL ELECTRONICS, INC. AND CONTAINS CONFIDENTIAL AND TRADE SECRET INFORMATION. THIS SHEET MAY NOT BE TRANSFERED FROM THE CUSTODY OF THE COMPETENT DIVISION OF R&D DEPARTMENT EXCEPT AS AUTHORIZED BY COMPAL ELECTRONICS, INC. NEITHER THIS SHEET NOR THE INFORMATION IT CONTAINS MAY BE USED BY OR DISCLOSED TO ANY THIRD PARTY WITHOUT PRIOR WRITTEN CONSENT OF COMPAL ELECTRONICS, INC.

Compal Electronics, Inc.

Title: **DDRII SO-DIMM 1**

Size	Document Number	Rev
Custom	KBYF0 LA-5051P	0.3

Date: Tuesday, February 03, 2009 | Sheet 9 of 46

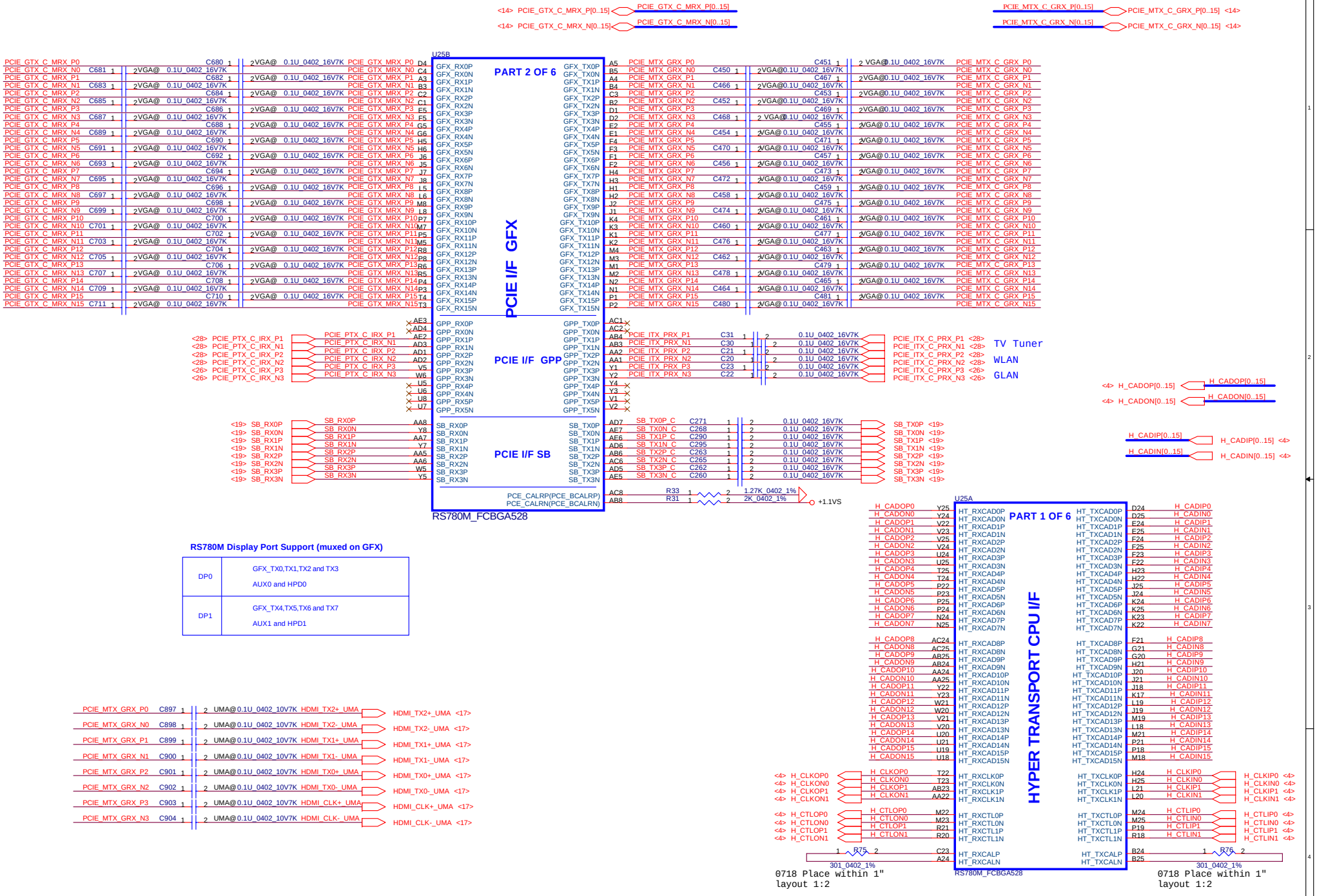

RS780M Display Port Support (muxed on GFX)

DP0	GFX_TX0,TX1,TX2 and TX3 AUX0 and HPD0
DP1	GFX_TX4,TX5,TX6 and TX7 AUX1 and HPD1

Security Classification	Compal Secret Data		
Issued Date	2008/11/03	Deciphered Date	2009/11/03

THIS SHEET OF ENGINEERING DRAWING IS THE PROPRIETARY PROPERTY OF COMPAL ELECTRONICS, INC. AND CONTAINS CONFIDENTIAL AND TRADE SECRET INFORMATION. THIS SHEET MAY NOT BE TRANSFERED FROM THE CUSTODY OF THE COMPETENT DIVISION OF R&D DEPARTMENT EXCEPT AS AUTHORIZED BY COMPAL ELECTRONICS, INC. NEITHER THIS SHEET NOR THE INFORMATION IT CONTAINS MAY BE USED BY OR DISCLOSED TO ANY THIRD PARTY WITHOUT PRIOR WRITTEN CONSENT OF COMPAL ELECTRONICS, INC.

Compal Electronics, Inc.

Title: **RS780-HT/PCIE**

Size	Document Number	Rev
Custom	KBYF0 LA-5051P	0.3

Date: Tuesday, February 03, 2009 | Sheet 10 of 46

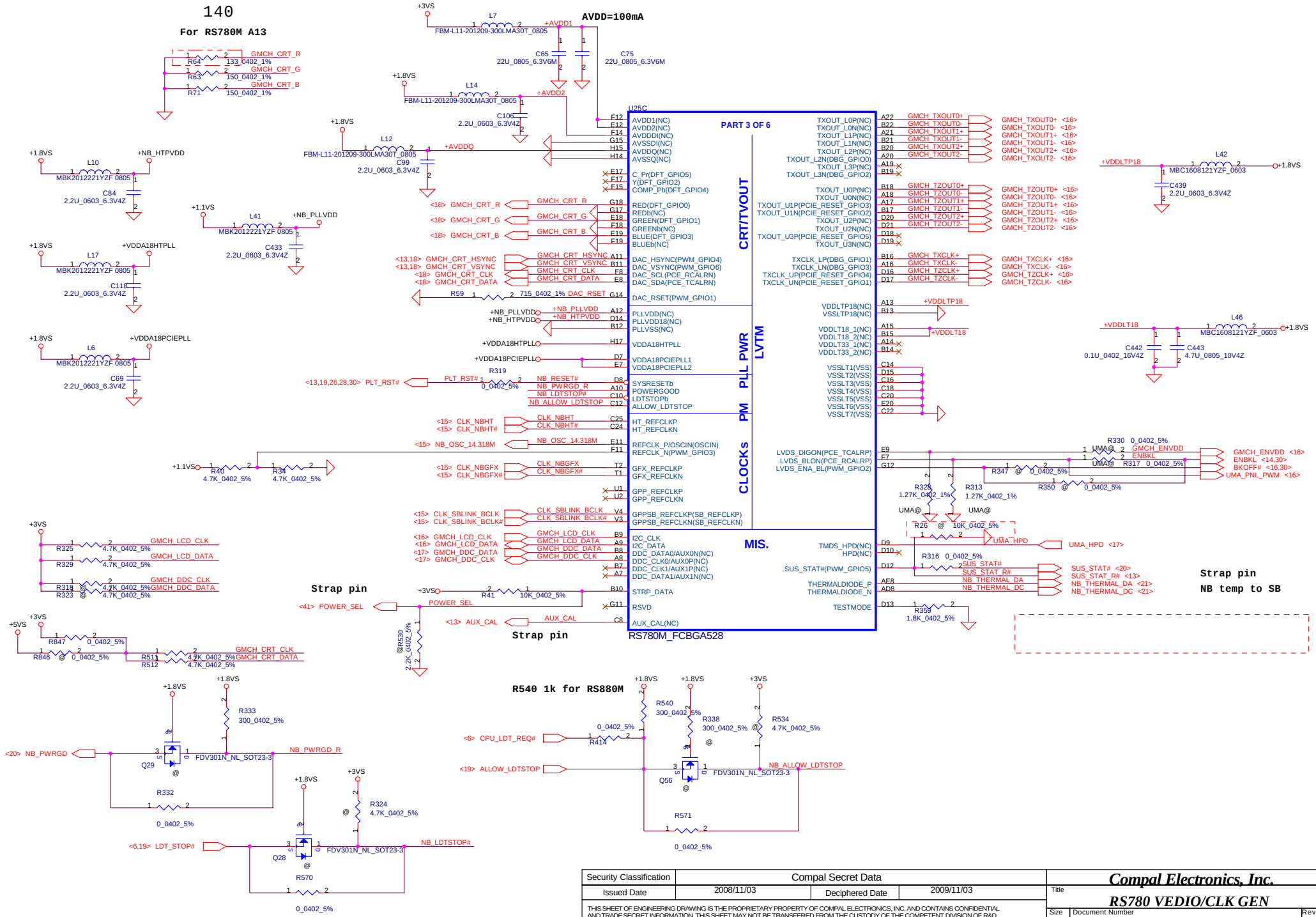

Security Classification	Compal Secret Data		
Issued Date	2008/11/03	Deciphered Date	2009/11/03

THIS SHEET OF ENGINEERING DRAWING IS THE PROPRIETARY PROPERTY OF COMPAL ELECTRONICS, INC. AND CONTAINS CONFIDENTIAL AND TRADE SECRET INFORMATION. THIS SHEET MAY NOT BE TRANSFERED FROM THE CUSTODY OF THE COMPETENT DIVISION OF R&D DEPARTMENT EXCEPT AS AUTHORIZED BY COMPAL ELECTRONICS, INC. NEITHER THIS SHEET NOR THE INFORMATION IT CONTAINS MAY BE USED BY OR DISCLOSED TO ANY THIRD PARTY WITHOUT PRIOR WRITTEN CONSENT OF COMPAL ELECTRONICS, INC.

Compal Electronics, Inc.

Title: RS780 VEDIO/CLK GEN

Size: Custom | Document Number: KBYF0 LA-5051P | Rev: 0.3

Date: Tuesday, February 03, 2009 | Sheet 11 of 46

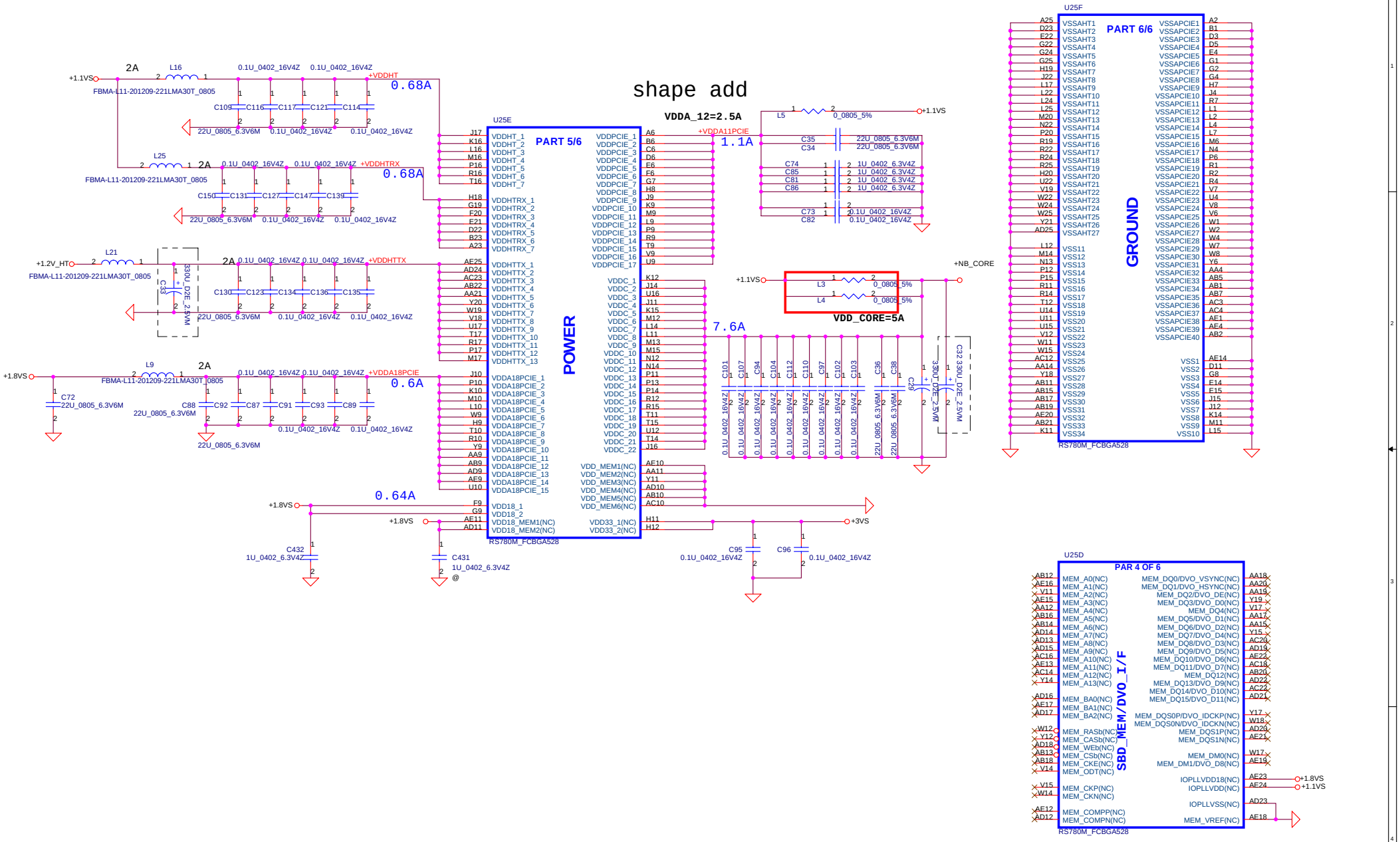

Security Classification	Compal Secret Data		
Issued Date	2008/11/03	Deciphered Date	2009/11/03

THIS SHEET OF ENGINEERING DRAWING IS THE PROPRIETARY PROPERTY OF COMPAL ELECTRONICS, INC. AND CONTAINS CONFIDENTIAL AND TRADE SECRET INFORMATION. THIS SHEET MAY NOT BE TRANSFERED FROM THE CUSTODY OF THE COMPETENT DIVISION OF R&D DEPARTMENT EXCEPT AS AUTHORIZED BY COMPAL ELECTRONICS, INC. NEITHER THIS SHEET NOR THE INFORMATION IT CONTAINS MAY BE USED BY OR DISCLOSED TO ANY THIRD PARTY WITHOUT PRIOR WRITTEN CONSENT OF COMPAL ELECTRONICS, INC.

Compal Electronics, Inc.

Title: **RS780 PWR/GND**

Size: Custom | Document Number: **KBYF0 LA-5051P** | Rev: 0.3

Date: Tuesday, February 03, 2009 | Sheet 12 of 46

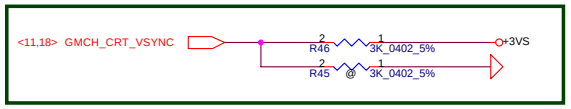

DFT_GPIO5:STRAP_DEBUG_BUS_GPIO_ENABLEb

```
Enables the Test Debug Bus using GPIO. (VSYNC)
1 : Disable (RS780)
0 : Enable (Rs780)
```

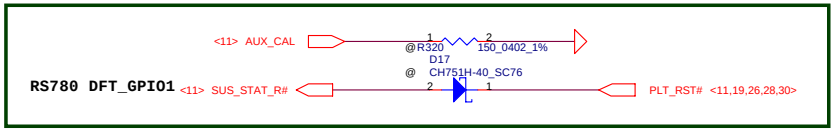

DFT_GPIO1: LOAD_EEPROM_STRAPS

```
Selects Loading of STRAPS from EPROM
1 : Bypass the loading of EEPROM straps and use Hardware Default Values
0 : I2C Master can load strap values from EEPROM if connected, or use
default values if not connected
RS740/RX780: DFT_GPIO1  RS780:SUS_STAT
```

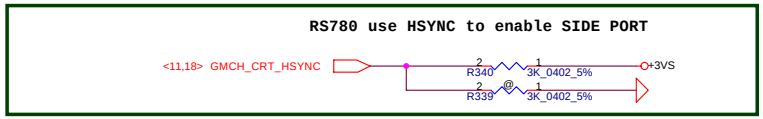

RS780 use HSYNC to enable SIDE PORT

```
RS740/RS780: Enables Side port memory ( RS780 use HSYNC#)
0.   Enable (RS780)
1 :  Disable(RS780)
```

Security Classification	Compal Secret Data		
Issued Date	2008/11/03	Deciphered Date	2009/11/03

THIS SHEET OF ENGINEERING DRAWING IS THE PROPRIETARY PROPERTY OF COMPAL ELECTRONICS, INC. AND CONTAINS CONFIDENTIAL AND TRADE SECRET INFORMATION. THIS SHEET MAY NOT BE TRANSFERED FROM THE CUSTODY OF THE COMPETENT DIVISION OF R&D DEPARTMENT EXCEPT AS AUTHORIZED BY COMPAL ELECTRONICS, INC. NEITHER THIS SHEET NOR THE INFORMATION IT CONTAINS MAY BE USED BY OR DISCLOSED TO ANY THIRD PARTY WITHOUT PRIOR WRITTEN CONSENT OF COMPAL ELECTRONICS, INC.

Compal Electronics, Inc.

Title: **RS780 STRAPS**

Size: Custom | Document Number: KBYF0 LA-5051P | Rev: 0.3

Date: Tuesday, February 03, 2009 | Sheet 13 of 46

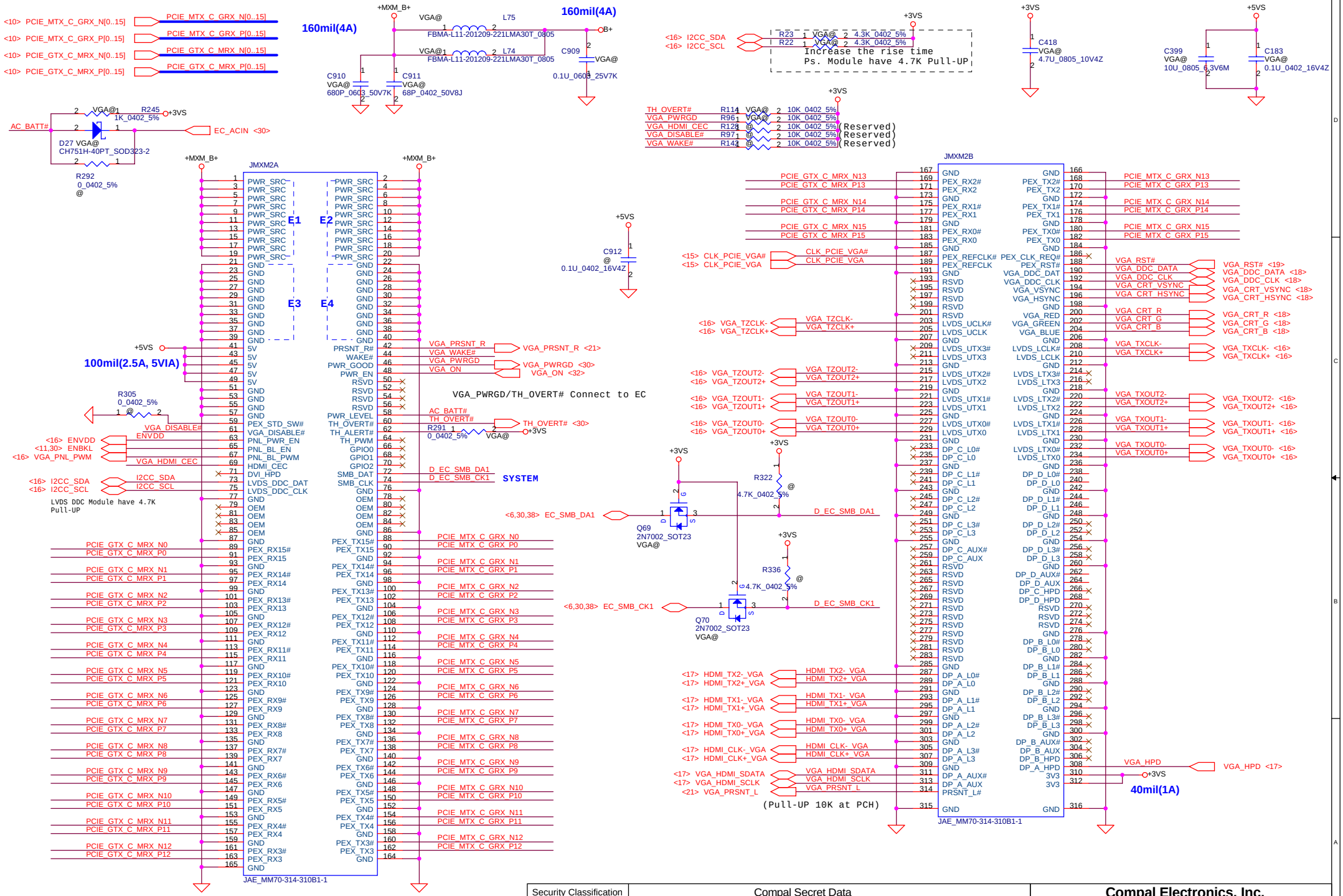

Security Classification	Compal Secret Data		
Issued Date	2008/11/03	Deciphered Date	2009/11/03

THIS SHEET OF ENGINEERING DRAWING IS THE PROPRIETARY PROPERTY OF COMPAL ELECTRONICS, INC. AND CONTAINS CONFIDENTIAL AND TRADE SECRET INFORMATION. THIS SHEET MAY NOT BE TRANSFERED FROM THE CUSTODY OF THE COMPETENT DIVISION OF R&D DEPARTMENT EXCEPT AS AUTHORIZED BY COMPAL ELECTRONICS, INC. NEITHER THIS SHEET NOR THE INFORMATION IT CONTAINS MAY BE USED BY OR DISCLOSED TO ANY THIRD PARTY WITHOUT PRIOR WRITTEN CONSENT OF COMPAL ELECTRONICS, INC.

Compal Electronics, Inc.

Title: MXM Connector

Size: B | Document Number: KBYF0 LA-5051P | Rev: 0.3

Date: Tuesday, February 03, 2009 | Sheet 14 of 46

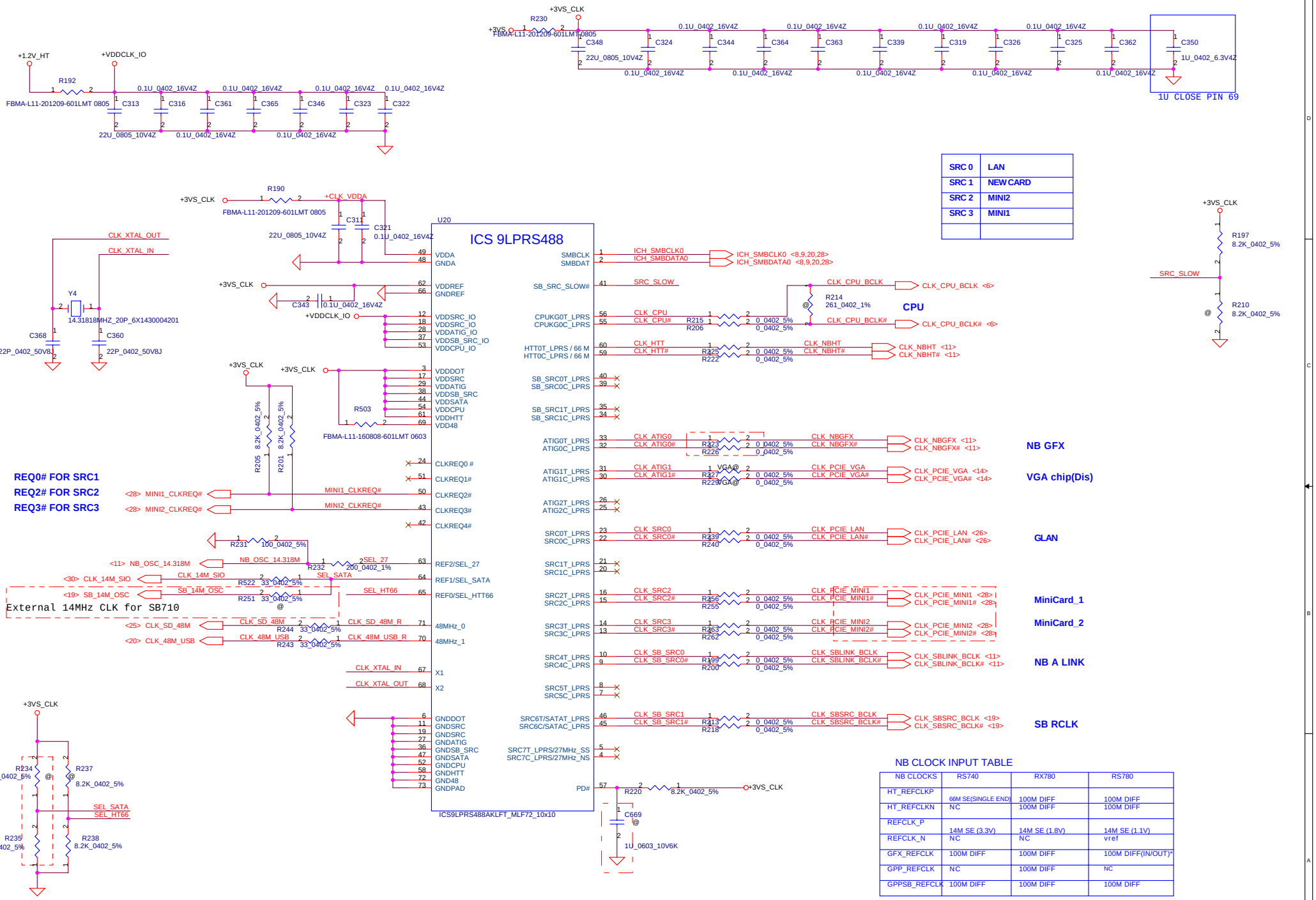

SRC 0	LAN
SRC 1	NEW CARD
SRC 2	MINI2
SRC 3	MINI1

NB CLOCK INPUT TABLE

NB CLOCKS	RS740	RX780	RS780
HT_REFCLKP	66M SE(SINGLE END)	100M DIFF	100M DIFF
HT_REFCLKN	NC	100M DIFF	100M DIFF
REFCLK_P	14M SE (3.3V)	14M SE (1.8V)	14M SE (1.1V)
REFCLK_N	NC	NC	vref
GFX_REFCLK	100M DIFF	100M DIFF	100M DIFF(IN/OUT)*
GPP_REFCLK	NC	100M DIFF	NC
GPPSB_REFCLK	100M DIFF	100M DIFF	100M DIFF

SEL_HTT66	1	configure as single-ended 66MHz output
	0*	configure as differential 100MHz output
SEL_SATA	1*	100M SATA SRC6 output
	0	SPREAD 100M SATA SRC6 output

* default

NB_OSC_14.318M	1	configure as 27M and 27M_SS output
	0*	configure as SRC_7 output

Security Classification	Compal Secret Data		
Issued Date	2008/11/03	Deciphered Date	2009/11/03

THIS SHEET OF ENGINEERING DRAWING IS THE PROPRIETARY PROPERTY OF COMPAL ELECTRONICS, INC. AND CONTAINS CONFIDENTIAL AND TRADE SECRET INFORMATION. THIS SHEET MAY NOT BE TRANSFERED FROM THE CUSTODY OF THE COMPETENT DIVISION OF R&D DEPARTMENT EXCEPT AS AUTHORIZED BY COMPAL ELECTRONICS, INC. NEITHER THIS SHEET NOR THE INFORMATION IT CONTAINS MAY BE USED BY OR DISCLOSED TO ANY THIRD PARTY WITHOUT PRIOR WRITTEN CONSENT OF COMPAL ELECTRONICS, INC.

Compal Electronics, Inc.

Title: **Clock generator**

Size: Custom | Document Number: *KBYF0 LA-5051P* | Rev: 0.3

Date: Tuesday, February 03, 2009 | Sheet 15 of 46

LCD POWER CIRCUIT

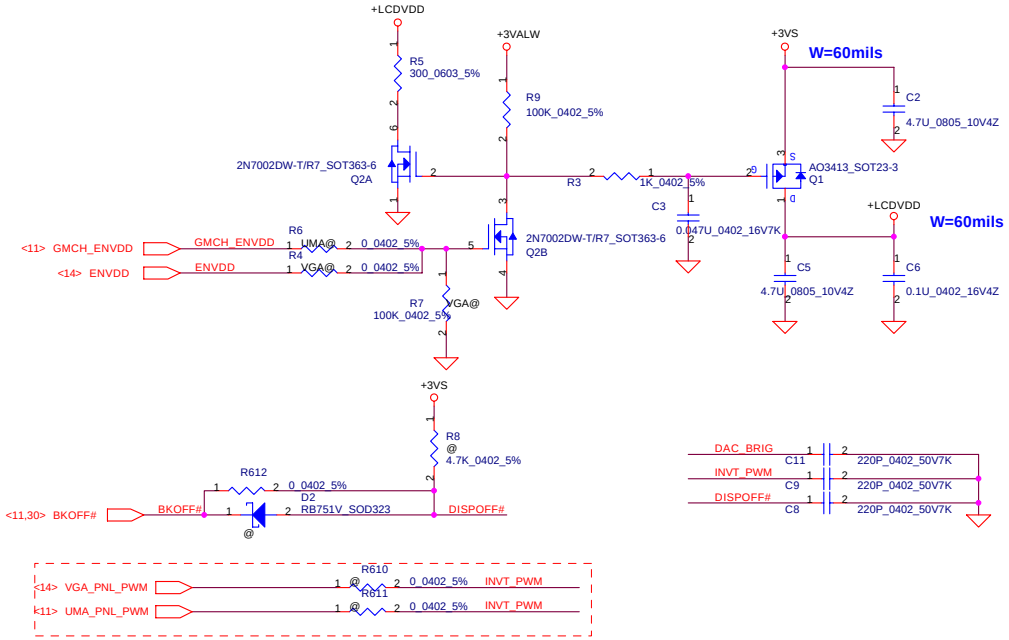

LCD/PANEL BD. Conn.

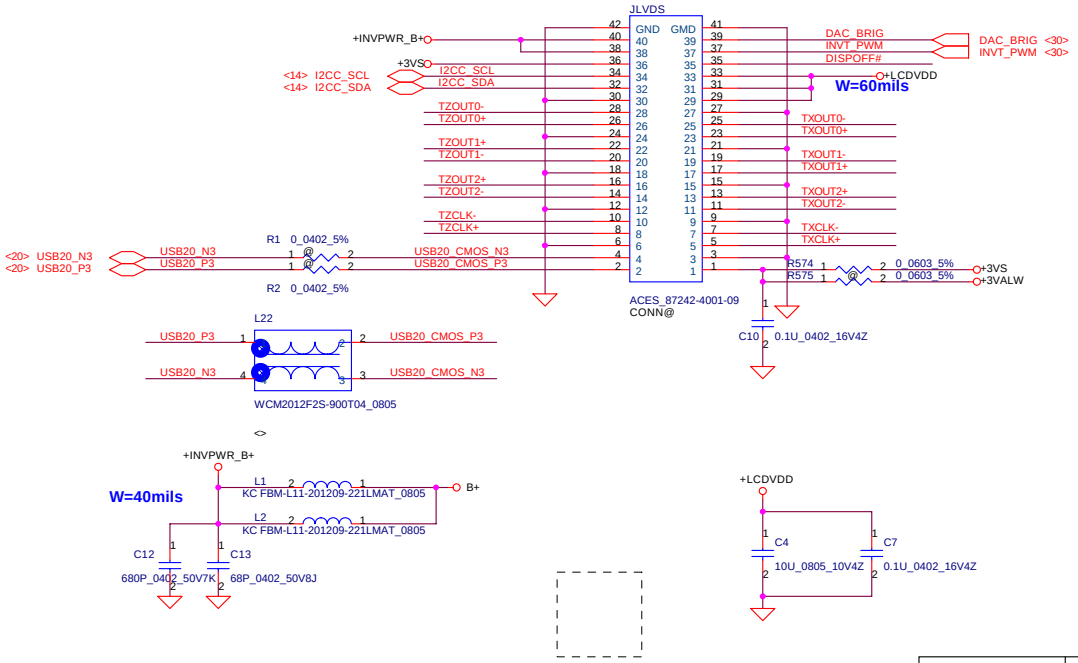

Security Classification	Compal Secret Data		
Issued Date	2008/11/03	Deciphered Date	2009/11/03

THIS SHEET OF ENGINEERING DRAWING IS THE PROPRIETARY PROPERTY OF COMPAL ELECTRONICS, INC. AND CONTAINS CONFIDENTIAL AND TRADE SECRET INFORMATION. THIS SHEET MAY NOT BE TRANSFERED FROM THE CUSTODY OF THE COMPETENT DIVISION OF R&D DEPARTMENT EXCEPT AS AUTHORIZED BY COMPAL ELECTRONICS, INC. NEITHER THIS SHEET NOR THE INFORMATION IT CONTAINS MAY BE USED BY OR DISCLOSED TO ANY THIRD PARTY WITHOUT PRIOR WRITTEN CONSENT OF COMPAL ELECTRONICS, INC.

Compal Electronics, Inc.

Title: LVDS & DVI Connector

Size: B | Document Number: KBYF0 LA-5051P | Rev: 0.3

Date: Tuesday, February 03, 2009 | Sheet 16 of 46

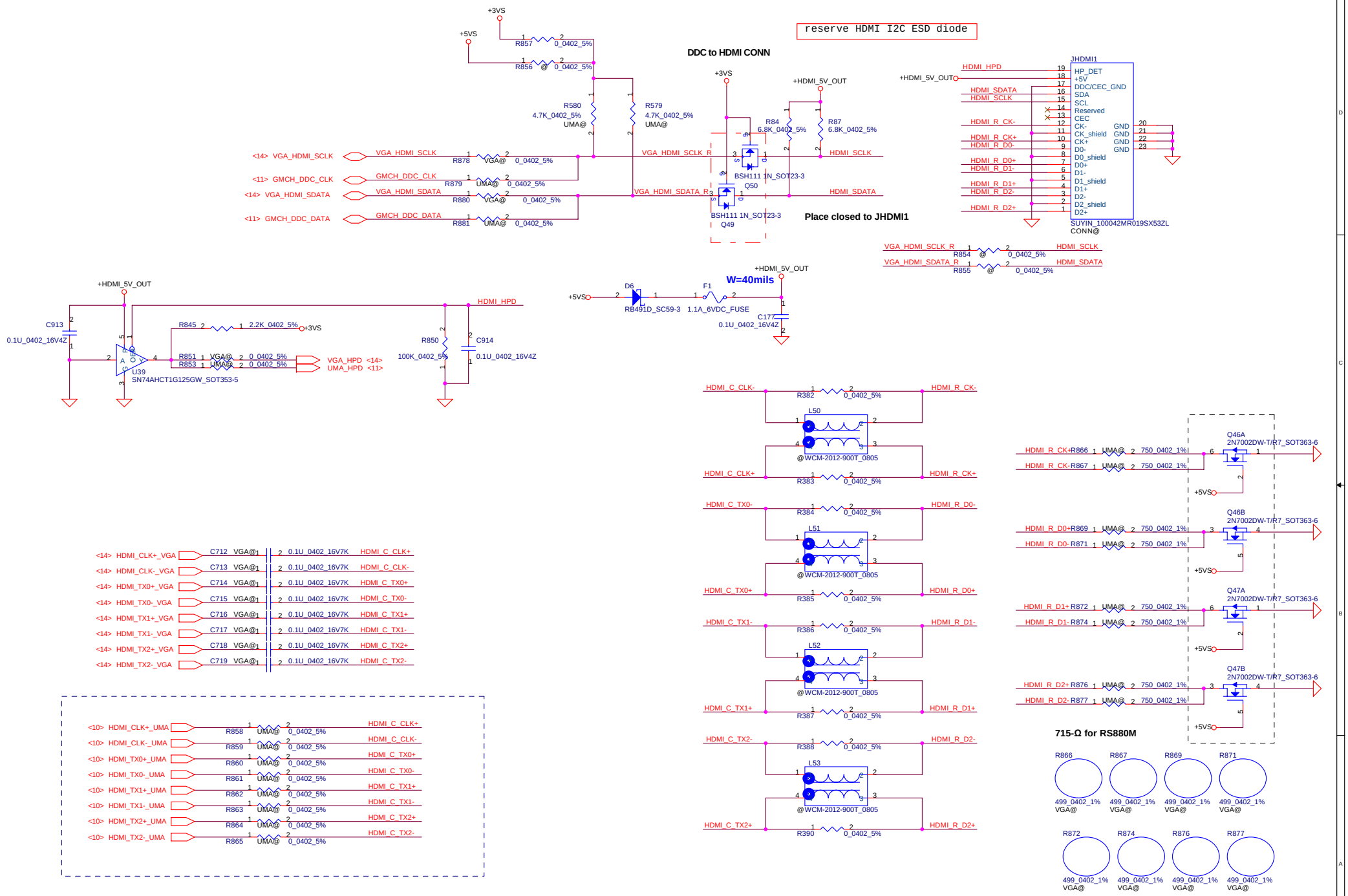

Security Classification	Compal Secret Data		
Issued Date	2008/11/03	Deciphered Date	2009/11/03

THIS SHEET OF ENGINEERING DRAWING IS THE PROPRIETARY PROPERTY OF COMPAL ELECTRONICS, INC. AND CONTAINS CONFIDENTIAL AND TRADE SECRET INFORMATION. THIS SHEET MAY NOT BE TRANSFERED FROM THE CUSTODY OF THE COMPETENT DIVISION OF R&D DEPARTMENT EXCEPT AS AUTHORIZED BY COMPAL ELECTRONICS, INC. NEITHER THIS SHEET NOR THE INFORMATION IT CONTAINS MAY BE USED BY OR DISCLOSED TO ANY THIRD PARTY WITHOUT PRIOR WRITTEN CONSENT OF COMPAL ELECTRONICS, INC.

Compal Electronics, Inc.

Title: DVI/HDMI Connector

Size: Custom | Document Number: KBYF0 LA-5051P | Rev: 0.3

Date: Tuesday, February 03, 2009 | Sheet 17 of 46

CRT Connector

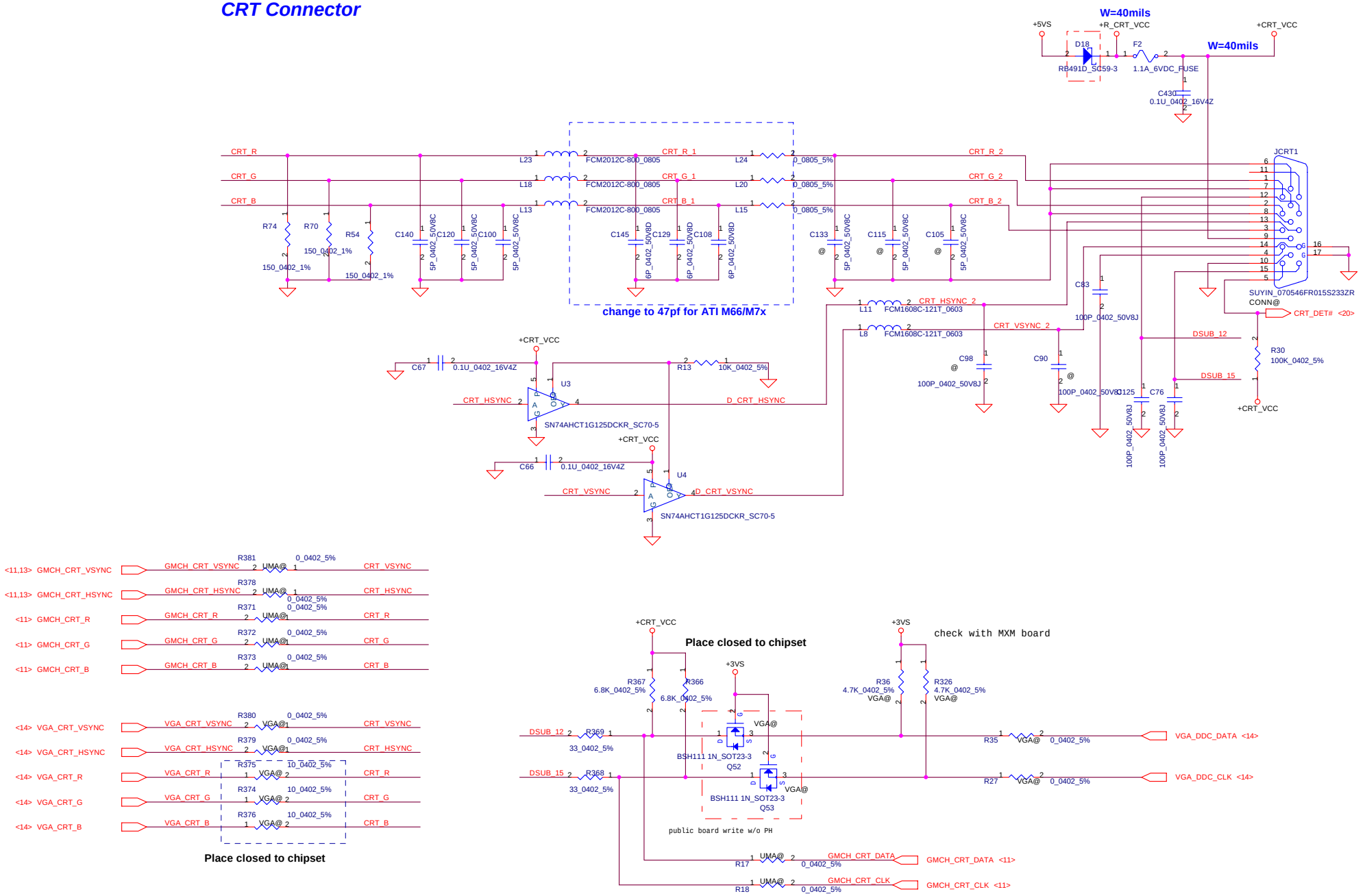

Security Classification	Compal Secret Data		
Issued Date	2008/11/03	Deciphered Date	2009/11/03

THIS SHEET OF ENGINEERING DRAWING IS THE PROPRIETARY PROPERTY OF COMPAL ELECTRONICS, INC. AND CONTAINS CONFIDENTIAL AND TRADE SECRET INFORMATION. THIS SHEET MAY NOT BE TRANSFERED FROM THE CUSTODY OF THE COMPETENT DIVISION OF R&D DEPARTMENT EXCEPT AS AUTHORIZED BY COMPAL ELECTRONICS, INC. NEITHER THIS SHEET NOR THE INFORMATION IT CONTAINS MAY BE USED BY OR DISCLOSED TO ANY THIRD PARTY WITHOUT PRIOR WRITTEN CONSENT OF COMPAL ELECTRONICS, INC.

Compal Electronics, Inc.

Title: CRT Connector

Size: B | Document Number: KBYF0 LA-5051P | Rev: 0.3

Date: Tuesday, February 03, 2009 | Sheet 18 of 46

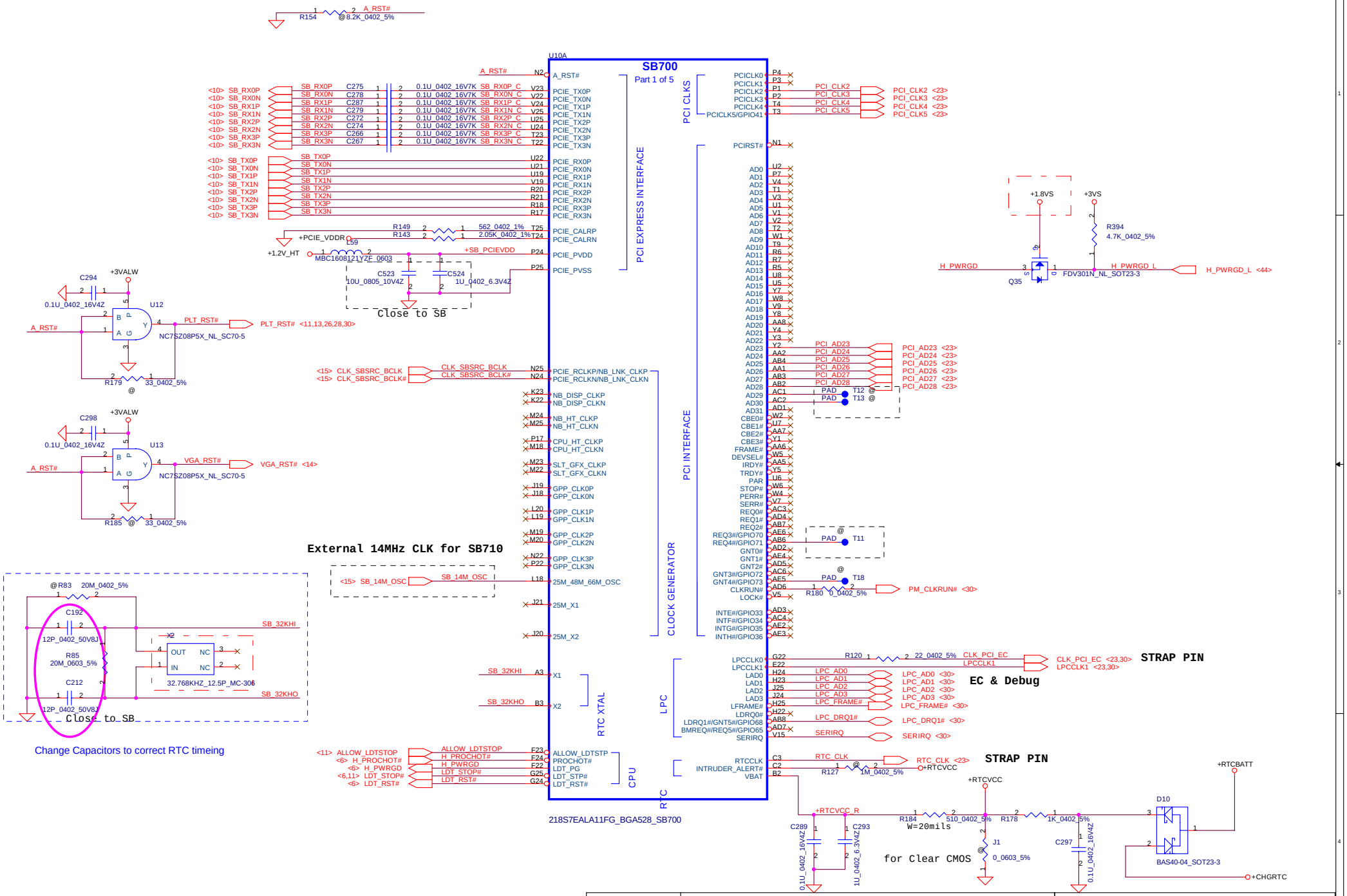

Security Classification	Compal Secret Data		
Issued Date	2008/11/03	Deciphered Date	2009/11/03

THIS SHEET OF ENGINEERING DRAWING IS THE PROPRIETARY PROPERTY OF COMPAL ELECTRONICS, INC. AND CONTAINS CONFIDENTIAL AND TRADE SECRET INFORMATION. THIS SHEET MAY NOT BE TRANSFERED FROM THE CUSTODY OF THE COMPETENT DIVISION OF R&D DEPARTMENT EXCEPT AS AUTHORIZED BY COMPAL ELECTRONICS, INC. NEITHER THIS SHEET NOR THE INFORMATION IT CONTAINS MAY BE USED BY OR DISCLOSED TO ANY THIRD PARTY WITHOUT PRIOR WRITTEN CONSENT OF COMPAL ELECTRONICS, INC.

Compal Electronics, Inc.

Title: **SB700-PCIE/PCI/ACPI/LPC/RTC**

Size: Custom | Document Number: **KBYF0 LA-5051P** | Rev: 0.3

Date: Tuesday, February 03, 2009 | Sheet 19 of 46

SKU-ID	R509	R510
UMA		POP
DIS	POP	

demo circuit LID use RI#

SB700 has internal PD

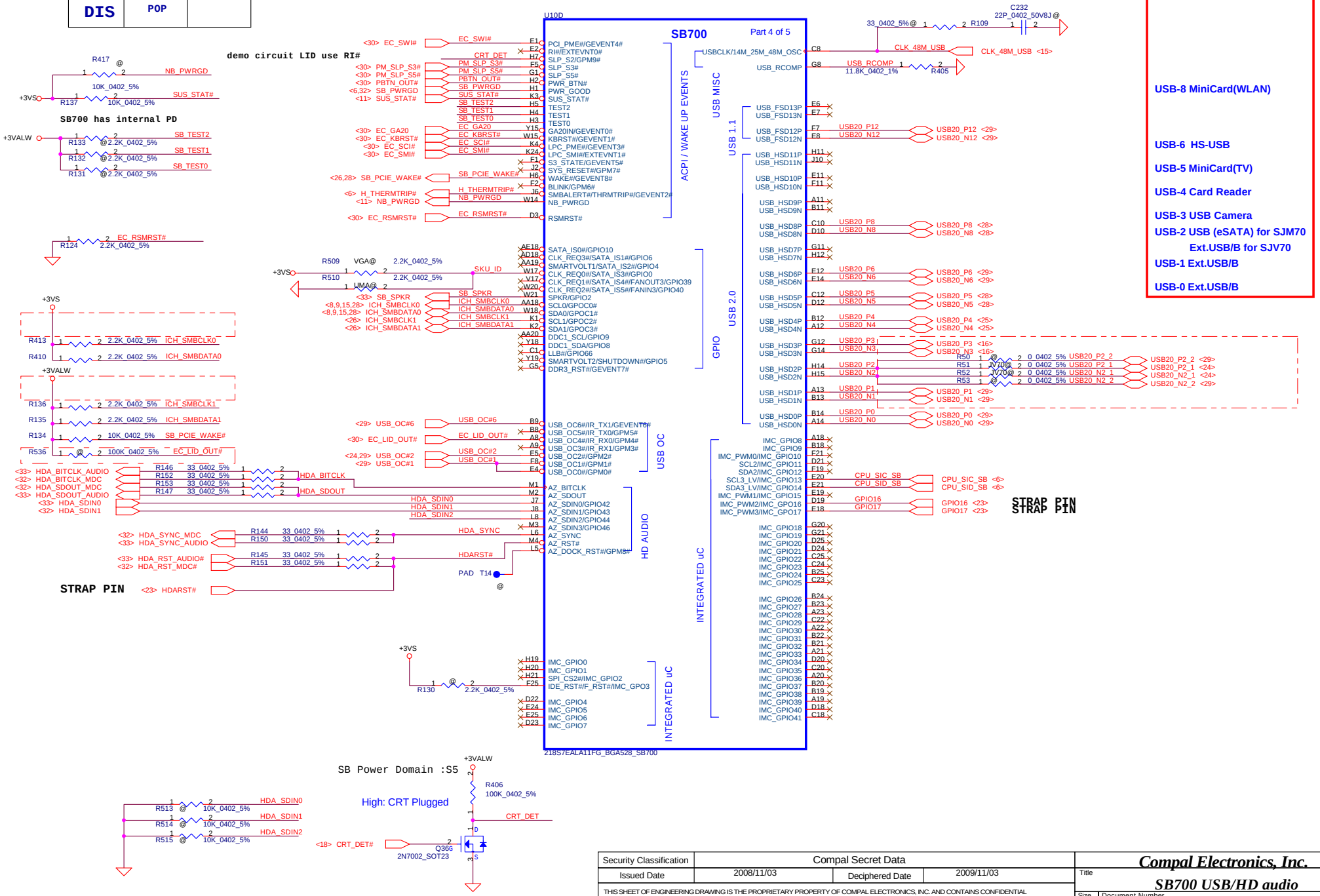

Security Classification	Compal Secret Data		
Issued Date	2008/11/03	Deciphered Date	2009/11/03

THIS SHEET OF ENGINEERING DRAWING IS THE PROPRIETARY PROPERTY OF COMPAL ELECTRONICS, INC. AND CONTAINS CONFIDENTIAL AND TRADE SECRET INFORMATION. THIS SHEET MAY NOT BE TRANSFERED FROM THE CUSTODY OF THE COMPETENT DIVISION OF R&D DEPARTMENT EXCEPT AS AUTHORIZED BY COMPAL ELECTRONICS, INC. NEITHER THIS SHEET NOR THE INFORMATION IT CONTAINS MAY BE USED BY OR DISCLOSED TO ANY THIRD PARTY WITHOUT PRIOR WRITTEN CONSENT OF COMPAL ELECTRONICS, INC.

Compal Electronics, Inc.

Title: SB700 USB/HD audio

Size: Custom | Document Number: KBYF0 LA-5051P | Rev: 0.3

Date: Tuesday, February 03, 2009 | Sheet 20 of 46

Port Number	Pri/SEC,Mas/Slave assignment	SATA drive controlled by
Port 0	Primary master	SATA controler
Port 1	Secondary master	SATA controler
Port 2	Primary slave	SATA controler
Port 3	Secondary slave	SATA controler
Port 4	Primary (Secondary) master	PATA controler
Port 5	Primary (Secondary) slave	PATA controler

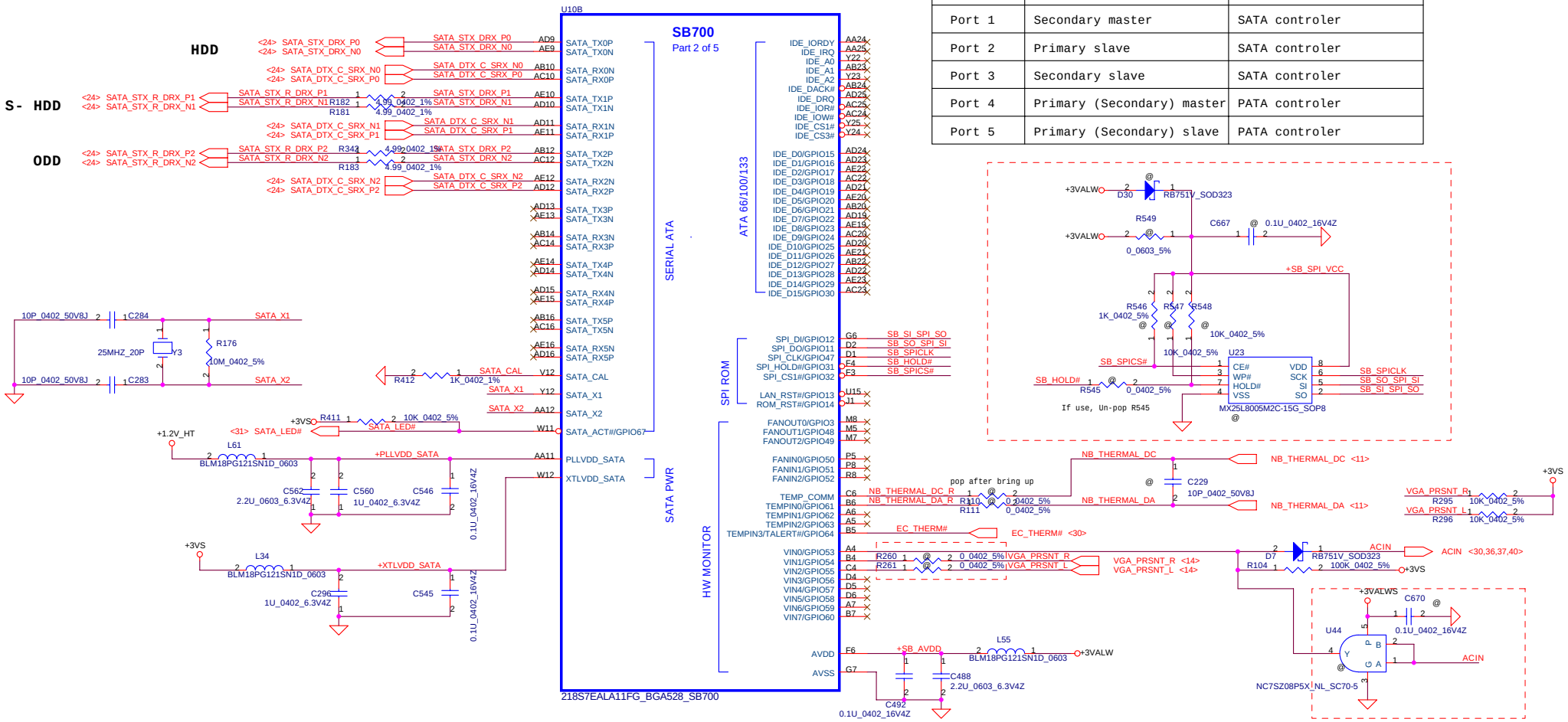

Security Classification	Compal Secret Data		
Issued Date	2008/11/03	Deciphered Date	2009/11/03

THIS SHEET OF ENGINEERING DRAWING IS THE PROPRIETARY PROPERTY OF COMPAL ELECTRONICS, INC. AND CONTAINS CONFIDENTIAL AND TRADE SECRET INFORMATION. THIS SHEET MAY NOT BE TRANSFERED FROM THE CUSTODY OF THE COMPETENT DIVISION OF R&D DEPARTMENT EXCEPT AS AUTHORIZED BY COMPAL ELECTRONICS, INC. NEITHER THIS SHEET NOR THE INFORMATION IT CONTAINS MAY BE USED BY OR DISCLOSED TO ANY THIRD PARTY WITHOUT PRIOR WRITTEN CONSENT OF COMPAL ELECTRONICS, INC.

Compal Electronics, Inc.

Title: **SB700 SATA/IDE/SPI**

Size: Custom | Document Number: **KBYF0 LA-5051P** | Rev: 0.3

Date: Tuesday, February 03, 2009 | Sheet 21 of 46

FOR SB700 ALL issue
A12 Will change to +1.2V_HT

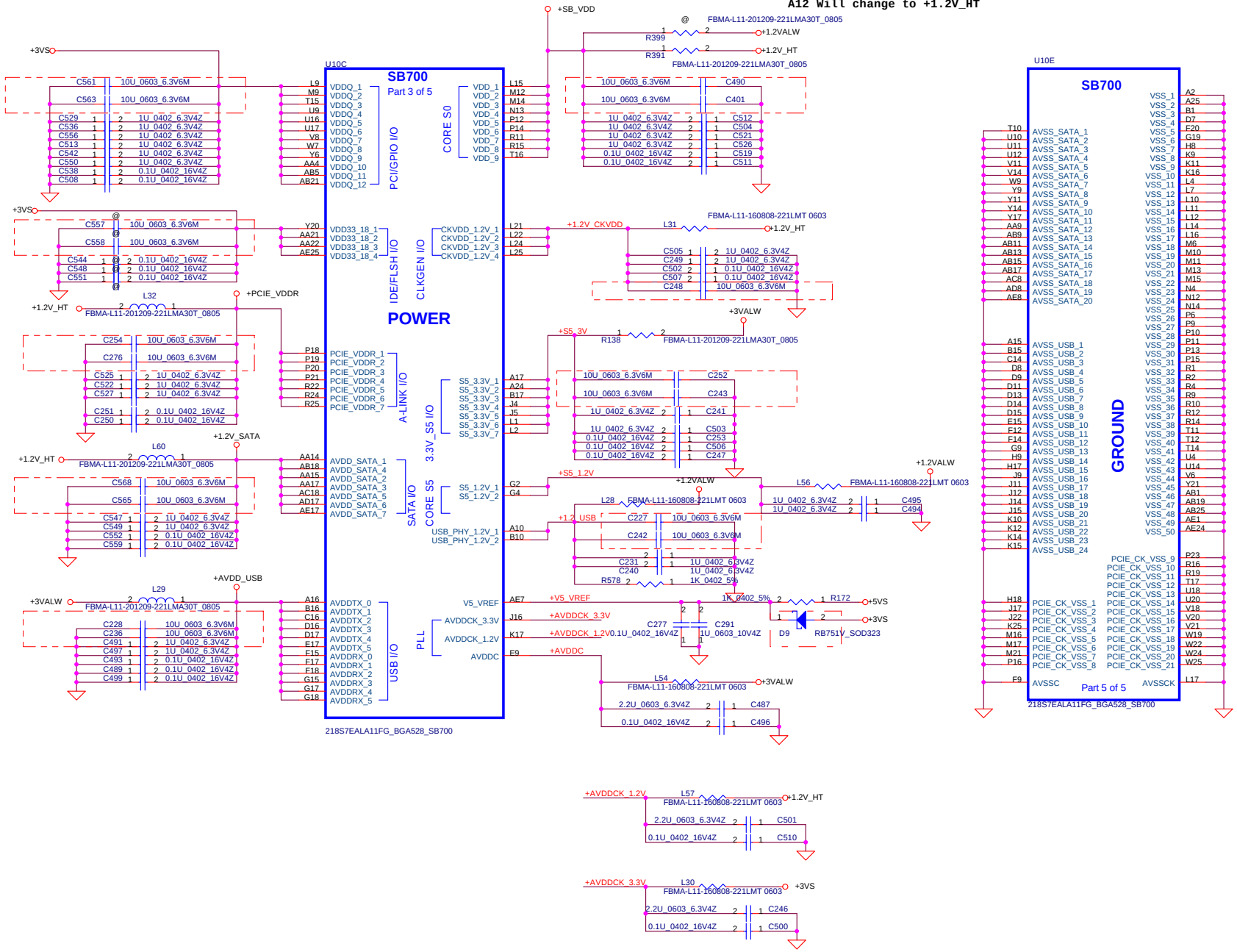

Security Classification	Compal Secret Data		
Issued Date	2008/11/03	Deciphered Date	2009/11/03

THIS SHEET OF ENGINEERING DRAWING IS THE PROPRIETARY PROPERTY OF COMPAL ELECTRONICS, INC. AND CONTAINS CONFIDENTIAL AND TRADE SECRET INFORMATION. THIS SHEET MAY NOT BE TRANSFERED FROM THE CUSTODY OF THE COMPETENT DIVISION OF R&D DEPARTMENT EXCEPT AS AUTHORIZED BY COMPAL ELECTRONICS, INC. NEITHER THIS SHEET NOR THE INFORMATION IT CONTAINS MAY BE USED BY OR DISCLOSED TO ANY THIRD PARTY WITHOUT PRIOR WRITTEN CONSENT OF COMPAL ELECTRONICS, INC.

Compal Electronics, Inc.

Title: **SB700 power/GND**

Size: Custom | Document Number: **KBYF0 LA-5051P** | Rev: 0.3

Date: Tuesday, February 03, 2009 | Sheet 22 of 46

REQUIRED STRAPS

NOTE: SB700 HAS INTERNAL 15K PULL UP RESISTOR FOR RTC_CLK

	PCI_CLK2 CLK_PCI_PCM	PCI_CLK3 CLK_PCI_DBG	PCI_CLK4	PCI_CLK5	LPC_CLK0 CLK_PCI_EC	LPC_CLK1	RTC_CLK	AZ_RST_CD#	GP17 GP16
PULL HIGH	BOOTFAIL TIMER ENABLED	USE DEBUG STRAPS	RESERVED	RESERVED	ENABLE PCI MEM BOOT	CLKGEN ENABLED	**INTERNAL RTC** DEFAULT	EC ENABLED	Internal pull up H,H = Reserved H,L = SPI ROM **L,H = LPC ROM (Default L,NC)** L,L = FWH ROM
PULL LOW	**BOOTFAIL TIMER DISABLED** DEFAULT	**IGNORE DEBUG STRAPS** DEFAULT			**DISABLE PCI MEM BOOT** DEFAULT	**CLKGEN DISABLED** DEFAULT	**EXT. RTC** (PD on X1, apply 32KHz to RTC_CLK)	**EC DISABLED** DEFAULT	

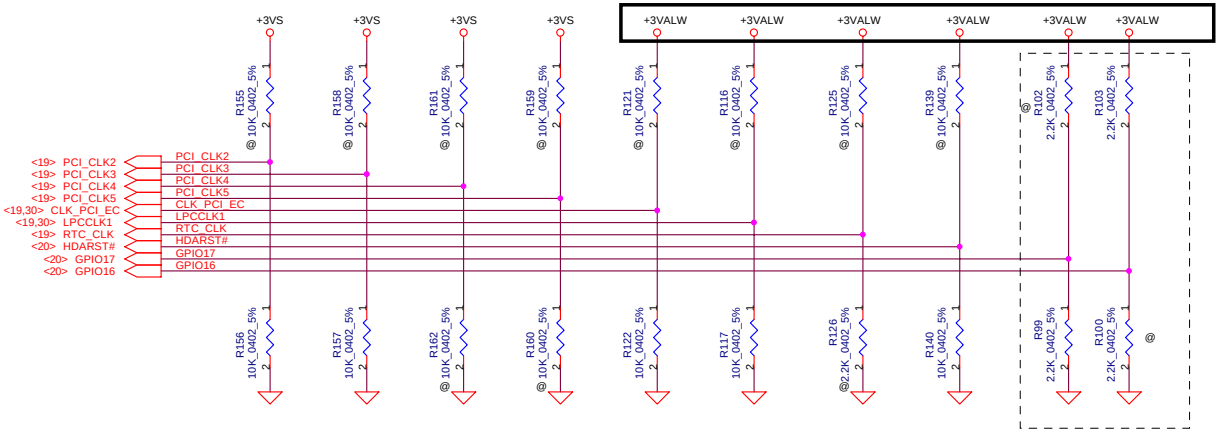

DEBUG STRAPS

SB700 HAS 15K INTERNAL PU FOR PCI_AD[28:23]

	PCI_AD28	PCI_AD27	PCI_AD26	PCI_AD25	PCI_AD24	PCI_AD23
PULL HIGH	**USE LONG RESET** DEFAULT	**USE PCI PLL** DEFAULT	**USE ACPI BCLK** DEFAULT	**USE IDE PLL** DEFAULT	**USE DEFAULT PCIE STRAPS** DEFAULT	**RESERVED**
PULL LOW	USE SHORT RESET	BYPASS PCI PLL	BYPASS ACPI BCLK	BYPASS IDE PLL	USE EEPROM PCIE STRAPS	

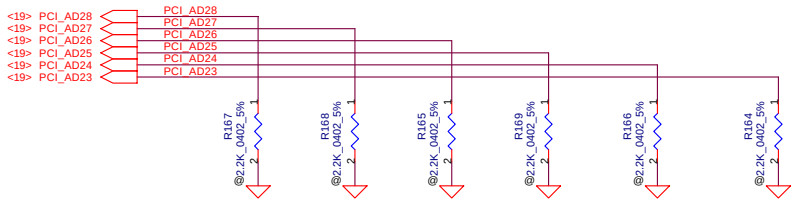

Security Classification	Compal Secret Data		
Issued Date	2008/11/03	Deciphered Date	2009/11/03

THIS SHEET OF ENGINEERING DRAWING IS THE PROPRIETARY PROPERTY OF COMPAL ELECTRONICS, INC. AND CONTAINS CONFIDENTIAL AND TRADE SECRET INFORMATION. THIS SHEET MAY NOT BE TRANSFERED FROM THE CUSTODY OF THE COMPETENT DIVISION OF R&D DEPARTMENT EXCEPT AS AUTHORIZED BY COMPAL ELECTRONICS, INC. NEITHER THIS SHEET NOR THE INFORMATION IT CONTAINS MAY BE USED BY OR DISCLOSED TO ANY THIRD PARTY WITHOUT PRIOR WRITTEN CONSENT OF COMPAL ELECTRONICS, INC.

Compal Electronics, Inc.

Title: SB700 STRAPS

Size: Custom | Document Number: KBYF0 LA-5051P | Rev: 0.3

Date: Tuesday, February 03, 2009 | Sheet 23 of 46

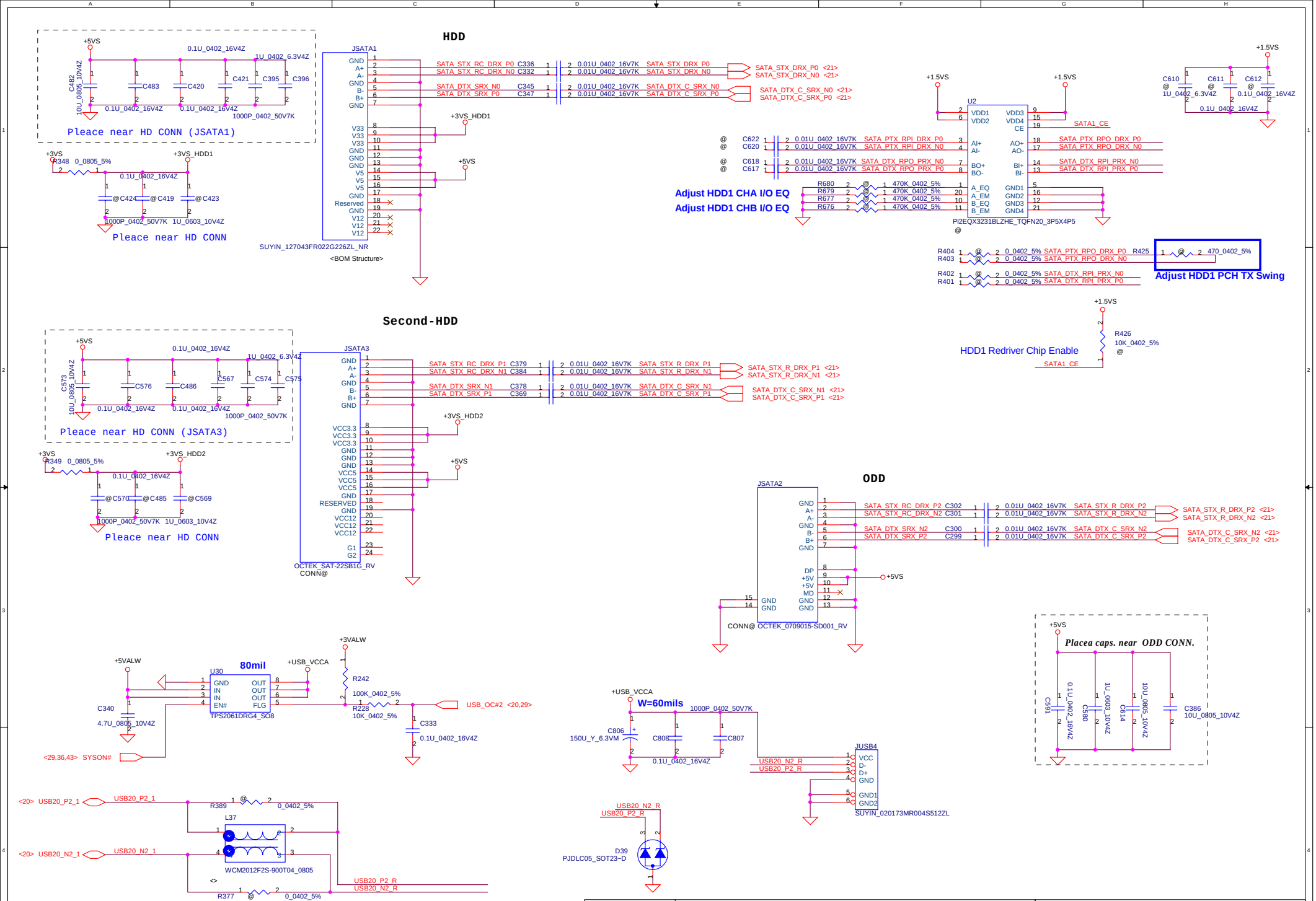

Security Classification	Compal Secret Data		
Issued Date	2008/11/03	Deciphered Date	2009/11/03

THIS SHEET OF ENGINEERING DRAWING IS THE PROPRIETARY PROPERTY OF COMPAL ELECTRONICS, INC. AND CONTAINS CONFIDENTIAL AND TRADE SECRET INFORMATION. THIS SHEET MAY NOT BE TRANSFERED FROM THE CUSTODY OF THE COMPETENT DIVISION OF R&D DEPARTMENT EXCEPT AS AUTHORIZED BY COMPAL ELECTRONICS, INC. NEITHER THIS SHEET NOR THE INFORMATION IT CONTAINS MAY BE USED BY OR DISCLOSED TO ANY THIRD PARTY WITHOUT PRIOR WRITTEN CONSENT OF COMPAL ELECTRONICS, INC.

Compal Electronics, Inc.

Title: HDD & ODD Connector

Size: B | Document Number: KBYF0 LA-5051P | Rev: 0.3

Date: Tuesday, February 03, 2009 | Sheet 24 of 46

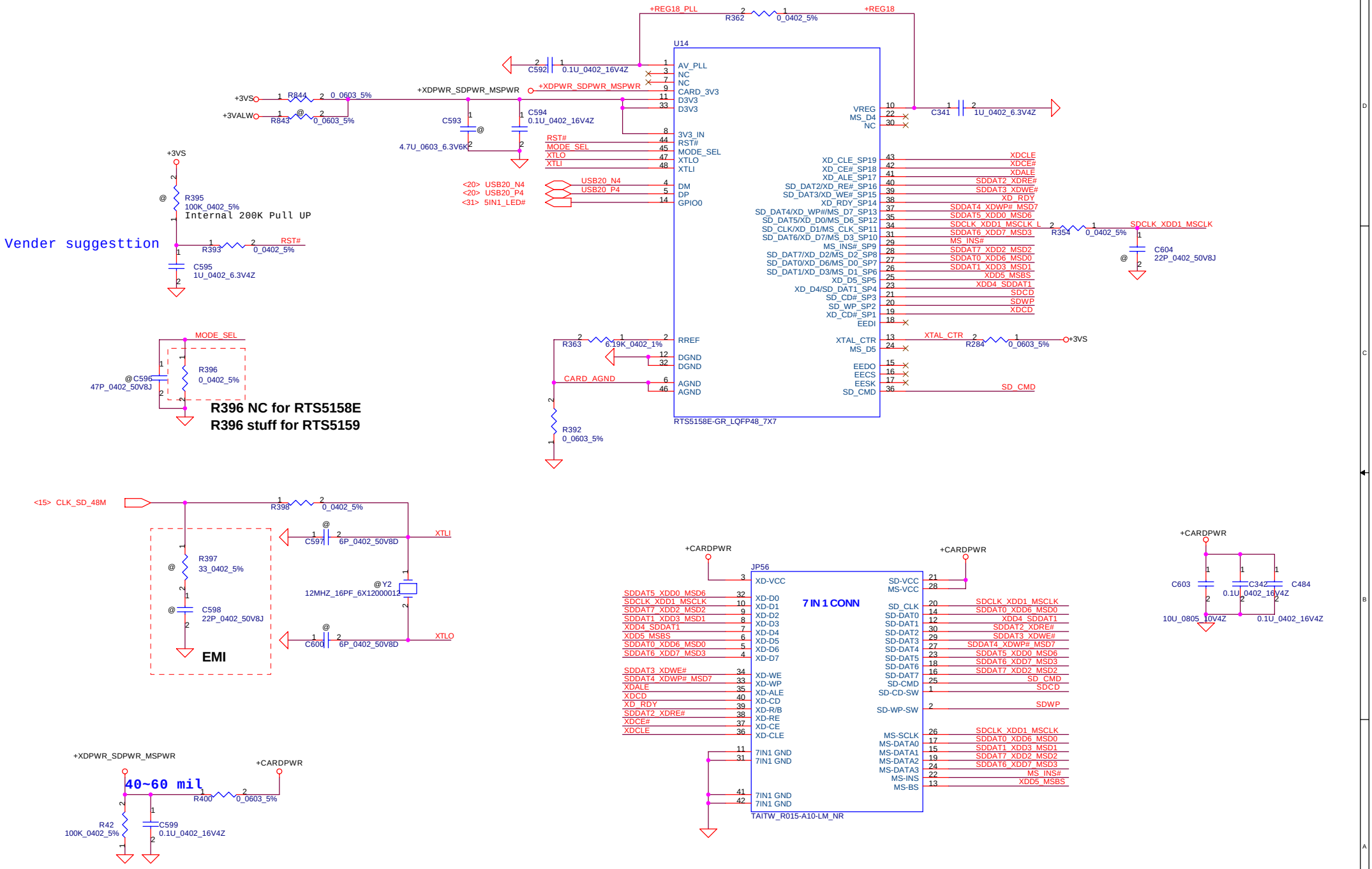

Security Classification	Compal Secret Data		
Issued Date	2008/11/03	Deciphered Date	2009/11/03

THIS SHEET OF ENGINEERING DRAWING IS THE PROPRIETARY PROPERTY OF COMPAL ELECTRONICS, INC. AND CONTAINS CONFIDENTIAL AND TRADE SECRET INFORMATION. THIS SHEET MAY NOT BE TRANSFERED FROM THE CUSTODY OF THE COMPETENT DIVISION OF R&D DEPARTMENT EXCEPT AS AUTHORIZED BY COMPAL ELECTRONICS, INC. NEITHER THIS SHEET NOR THE INFORMATION IT CONTAINS MAY BE USED BY OR DISCLOSED TO ANY THIRD PARTY WITHOUT PRIOR WRITTEN CONSENT OF COMPAL ELECTRONICS, INC.

Compal Electronics, Inc.

Title: Card Reader JMB385

Size: Custom | Document Number: KBYF0 LA-5051P | Rev: 0.3

Date: Tuesday, February 03, 2009 | Sheet 25 of 46

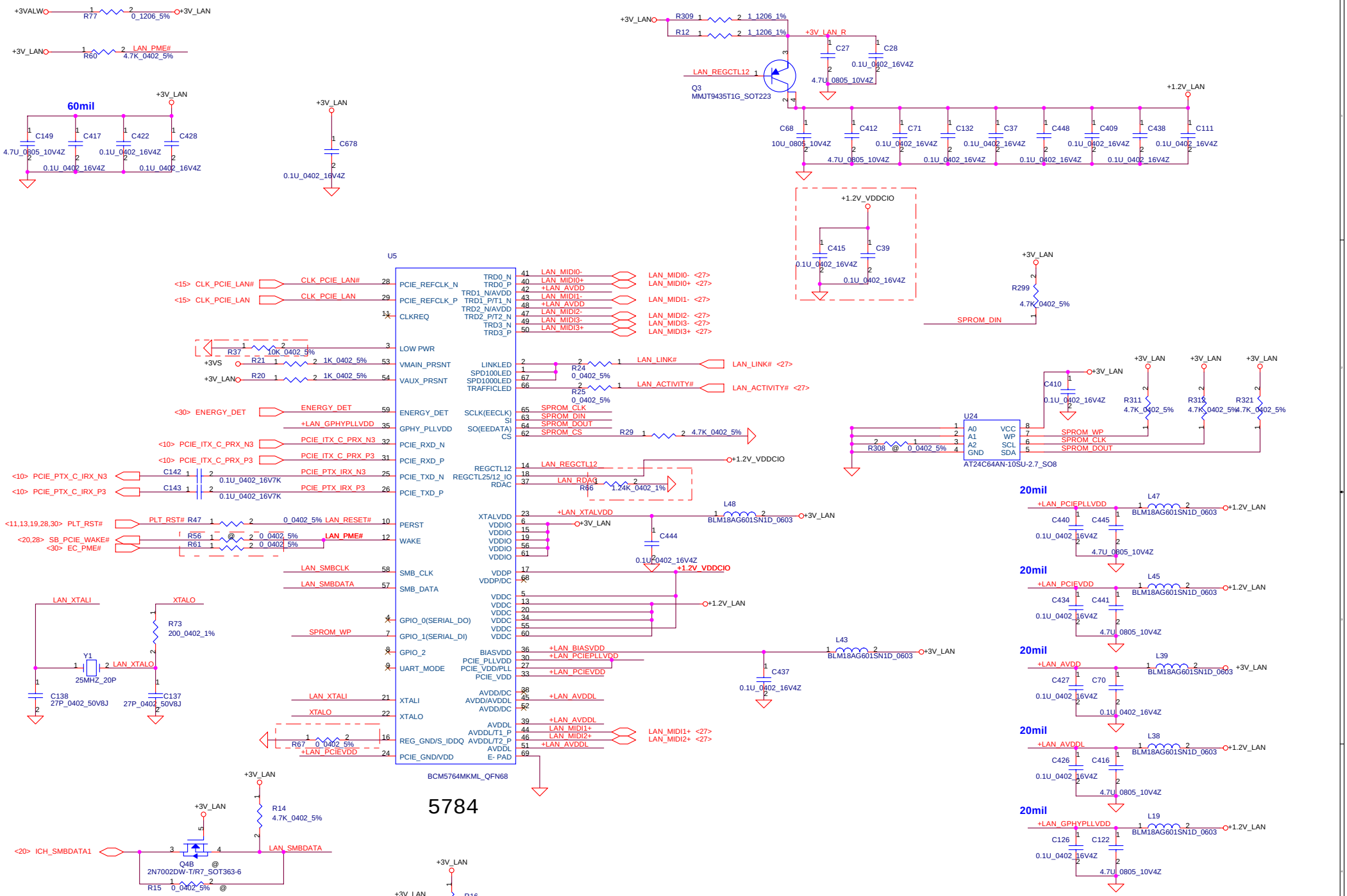

Security Classification	Compal Secret Data		
Issued Date	2008/11/03	Deciphered Date	2009/11/03

THIS SHEET OF ENGINEERING DRAWING IS THE PROPRIETARY PROPERTY OF COMPAL ELECTRONICS, INC. AND CONTAINS CONFIDENTIAL AND TRADE SECRET INFORMATION. THIS SHEET MAY NOT BE TRANSFERED FROM THE CUSTODY OF THE COMPETENT DIVISION OF R&D DEPARTMENT EXCEPT AS AUTHORIZED BY COMPAL ELECTRONICS, INC. NEITHER THIS SHEET NOR THE INFORMATION IT CONTAINS MAY BE USED BY OR DISCLOSED TO ANY THIRD PARTY WITHOUT PRIOR WRITTEN CONSENT OF COMPAL ELECTRONICS, INC.

Compal Electronics, Inc.

Title: BCM5764M_5787M

Size: Custom | Document Number: KBYF0 LA-5051P | Rev: 0.3

Date: Tuesday, February 03, 2009 | Sheet 26 of 46

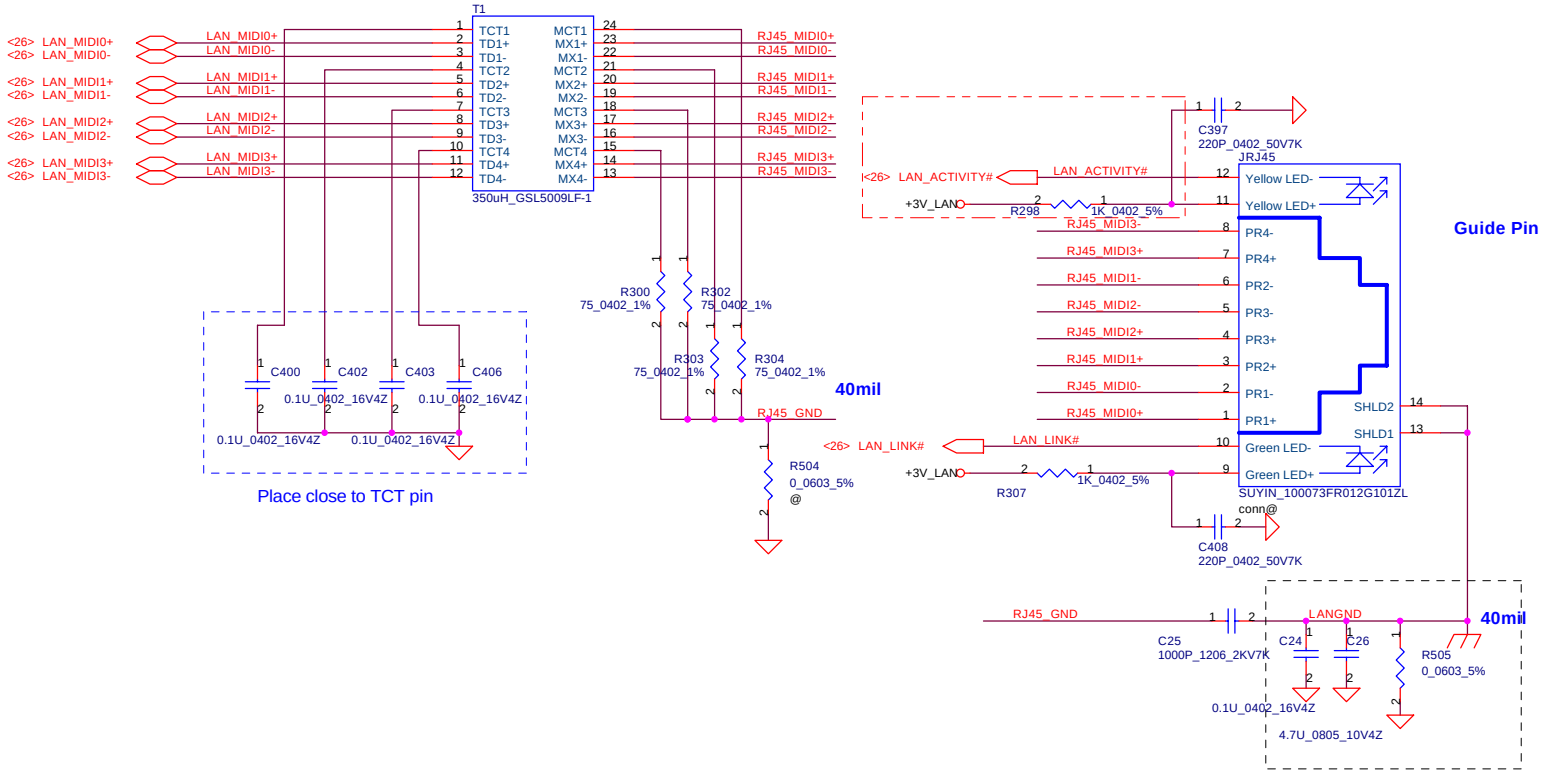

Security Classification	Compal Secret Data		
Issued Date	2008/11/03	Deciphered Date	2009/11/03

THIS SHEET OF ENGINEERING DRAWING IS THE PROPRIETARY PROPERTY OF COMPAL ELECTRONICS, INC. AND CONTAINS CONFIDENTIAL AND TRADE SECRET INFORMATION. THIS SHEET MAY NOT BE TRANSFERED FROM THE CUSTODY OF THE COMPETENT DIVISION OF R&D DEPARTMENT EXCEPT AS AUTHORIZED BY COMPAL ELECTRONICS, INC. NEITHER THIS SHEET NOR THE INFORMATION IT CONTAINS MAY BE USED BY OR DISCLOSED TO ANY THIRD PARTY WITHOUT PRIOR WRITTEN CONSENT OF COMPAL ELECTRONICS, INC.

Compal Electronics, Inc.

Title: LAN Magnetic & RJ45/RJ11

Size: B | Document Number: KBYF0 LA-5051P | Rev: 0.3

Date: Tuesday, February 03, 2009 | Sheet 27 of 46

For Wireless LAN

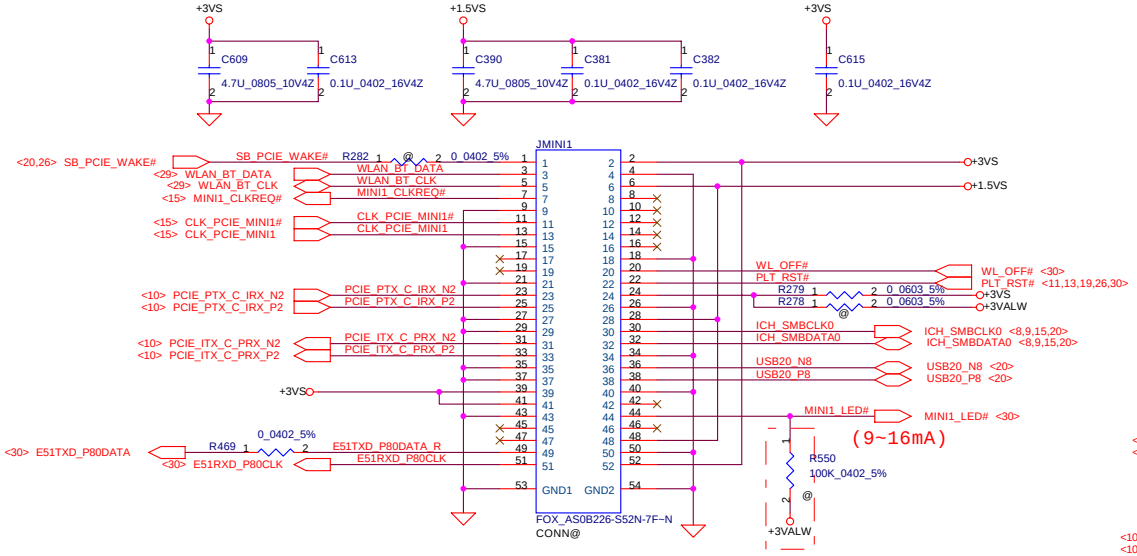

For TV-Tuner/HW MPEG

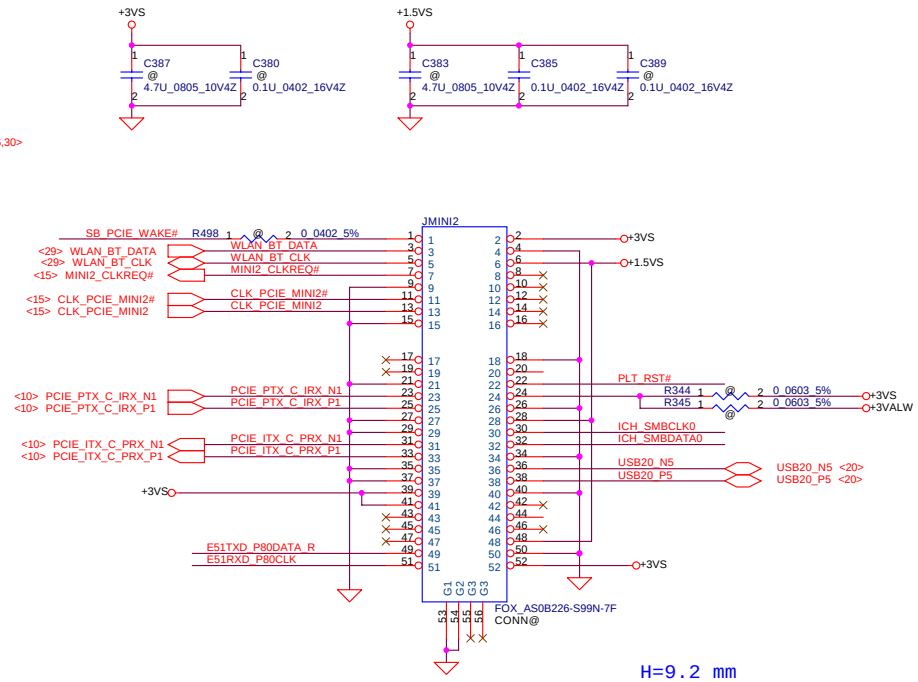

Mini Card Power Rating			
Power	Primary Power (mA)		Auxiliary Power (mA)
	Peak	Normal	Normal
+3VS	1000	750	
+3V	330	250	250 (wake enable)
+1.5VS	500	375	5 (Not wake enable)

Security Classification	Compal Secret Data		
Issued Date	2008/11/03	Deciphered Date	2009/11/03

THIS SHEET OF ENGINEERING DRAWING IS THE PROPRIETARY PROPERTY OF COMPAL ELECTRONICS, INC. AND CONTAINS CONFIDENTIAL AND TRADE SECRET INFORMATION. THIS SHEET MAY NOT BE TRANSFERED FROM THE CUSTODY OF THE COMPETENT DIVISION OF R&D DEPARTMENT EXCEPT AS AUTHORIZED BY COMPAL ELECTRONICS, INC. NEITHER THIS SHEET NOR THE INFORMATION IT CONTAINS MAY BE USED BY OR DISCLOSED TO ANY THIRD PARTY WITHOUT PRIOR WRITTEN CONSENT OF COMPAL ELECTRONICS, INC.

Compal Electronics, Inc.

Title: MINI CARD (WLAN & TV-Tuner)

Size: B | Document Number: KBYF0 LA-5051P | Rev: 0.3

Date: Tuesday, February 03, 2009 | Sheet 28 of 46

Bluetooth Conn.

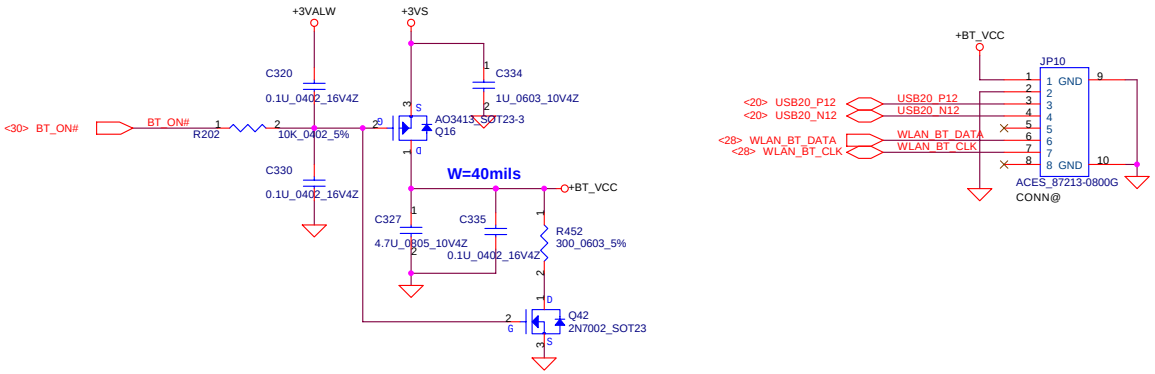

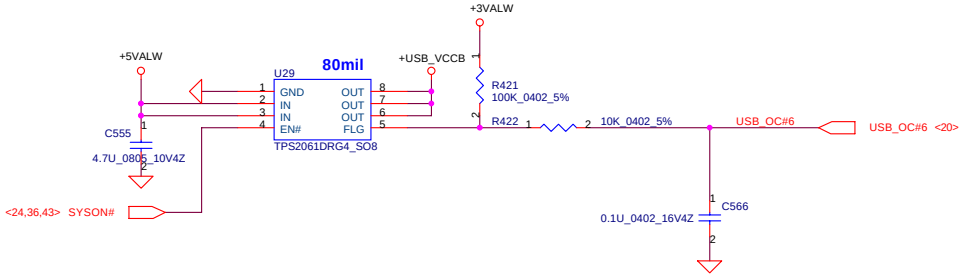

2 PORT

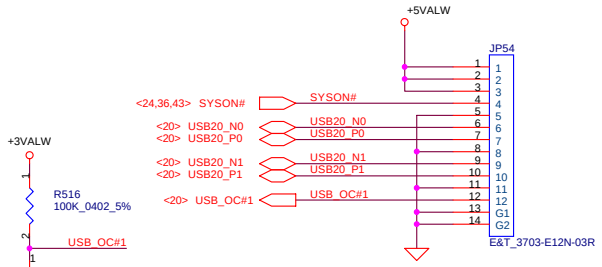

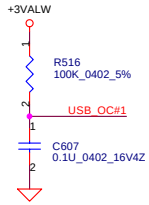

right

HS USB PORT

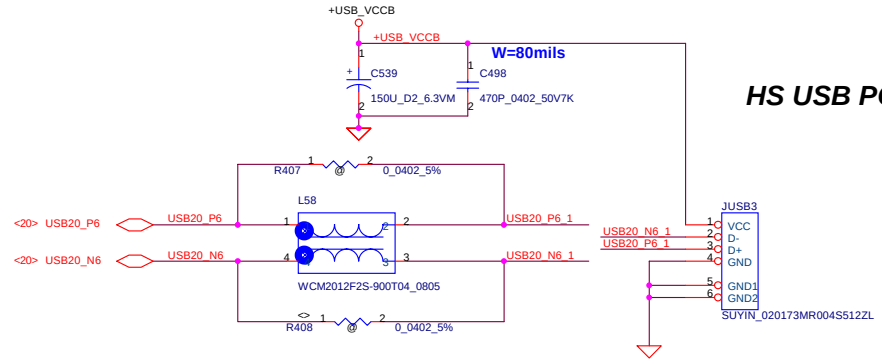

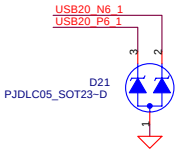

1 PORT FOR JV70

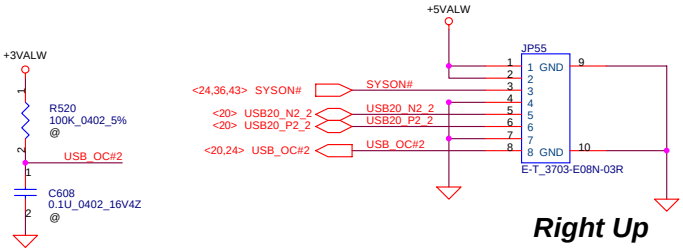

Right Up

Security Classification	Compal Secret Data		
Issued Date	2008/11/03	Deciphered Date	2009/11/03

THIS SHEET OF ENGINEERING DRAWING IS THE PROPRIETARY PROPERTY OF COMPAL ELECTRONICS, INC. AND CONTAINS CONFIDENTIAL AND TRADE SECRET INFORMATION. THIS SHEET MAY NOT BE TRANSFERED FROM THE CUSTODY OF THE COMPETENT DIVISION OF R&D DEPARTMENT EXCEPT AS AUTHORIZED BY COMPAL ELECTRONICS, INC. NEITHER THIS SHEET NOR THE INFORMATION IT CONTAINS MAY BE USED BY OR DISCLOSED TO ANY THIRD PARTY WITHOUT PRIOR WRITTEN CONSENT OF COMPAL ELECTRONICS, INC.

Compal Electronics, Inc.

Title: NEW CARD & USB Connector

Size: B | Document Number: KBYF0 LA-5051P | Rev: 0.3

Date: Tuesday, February 03, 2009 | Sheet 29 of 46

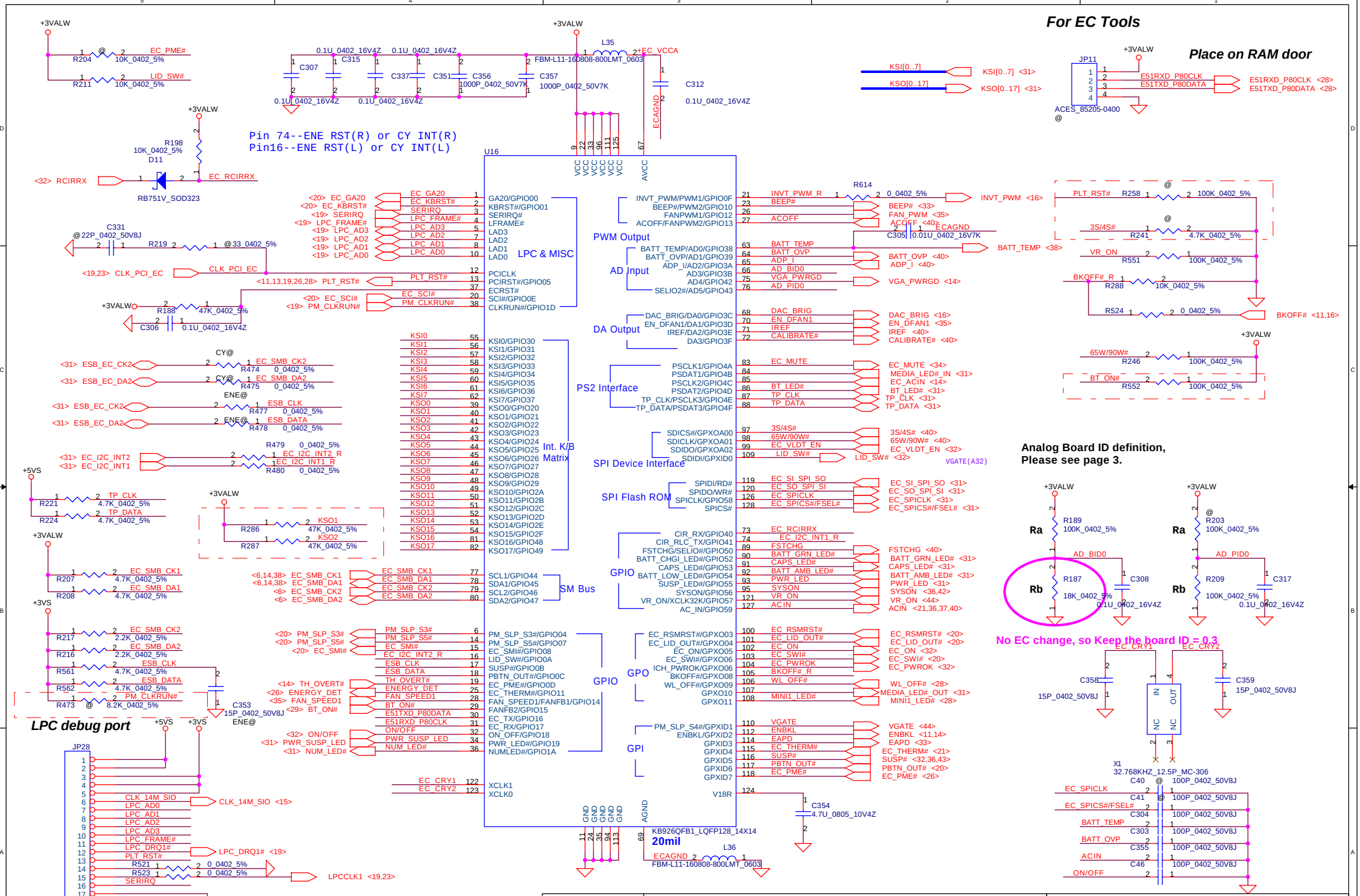

Security Classification	Compal Secret Data		
Issued Date	2008/11/03	Deciphered Date	2009/11/03

THIS SHEET OF ENGINEERING DRAWING IS THE PROPRIETARY PROPERTY OF COMPAL ELECTRONICS, INC. AND CONTAINS CONFIDENTIAL AND TRADE SECRET INFORMATION. THIS SHEET MAY NOT BE TRANSFERED FROM THE CUSTODY OF THE COMPETENT DIVISION OF R&D DEPARTMENT EXCEPT AS AUTHORIZED BY COMPAL ELECTRONICS, INC. NEITHER THIS SHEET NOR THE INFORMATION IT CONTAINS MAY BE USED BY OR DISCLOSED TO ANY THIRD PARTY WITHOUT PRIOR WRITTEN CONSENT OF COMPAL ELECTRONICS, INC.

Compal Electronics, Inc.

Title: EC ENE KB926

Size: B | Document Number: KBYF0 LA-5051P | Rev: 0.3

Date: Tuesday, February 03, 2009 | Sheet 30 of 46

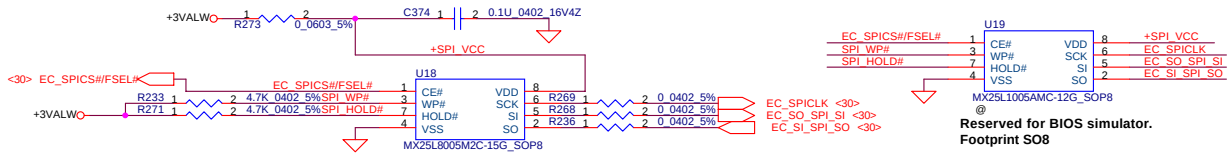

INT_KBD Conn.

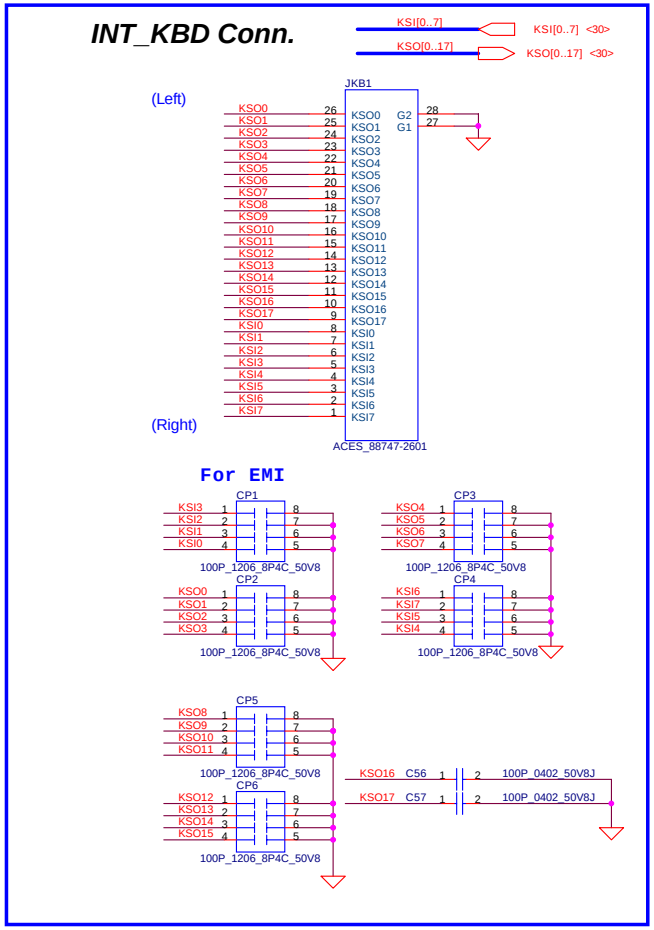

To Media/B Conn.

CAP Sansor right JM70

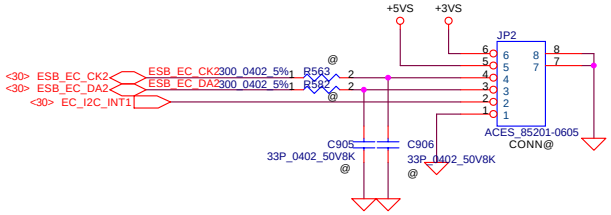

CAP Sansor lift for JM70

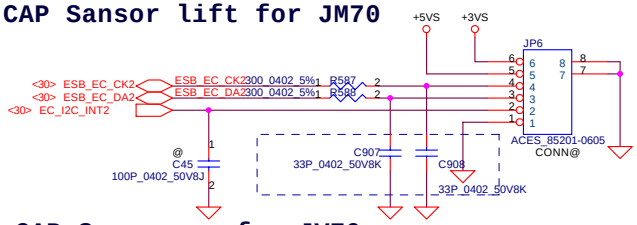

CAP Sansor up for JV70

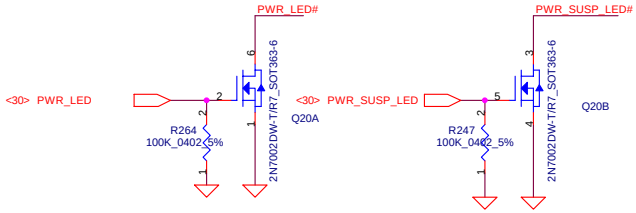

To TP/B Conn.

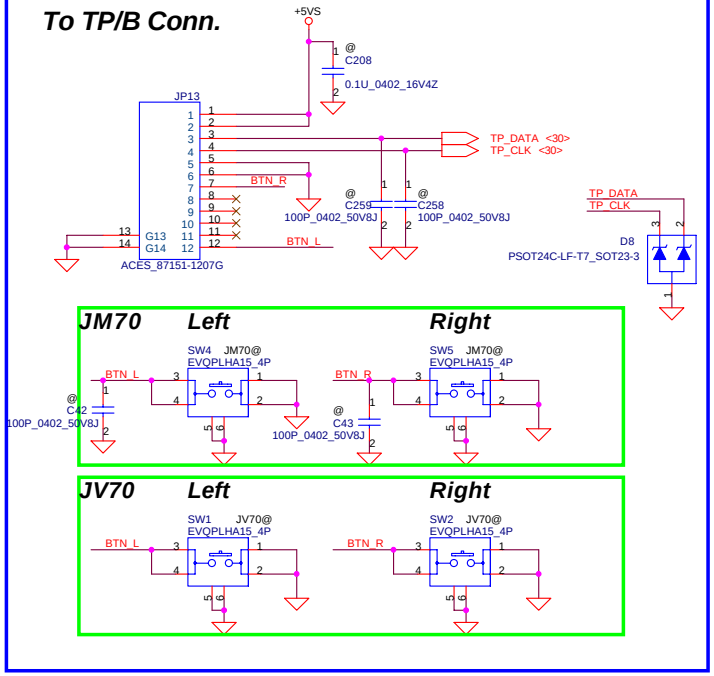

TO POWER BTN/B for JV70

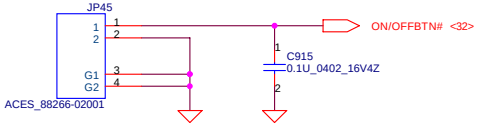

Need Check

To LED/B Conn.

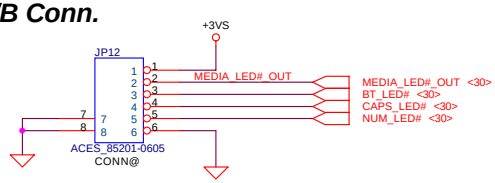

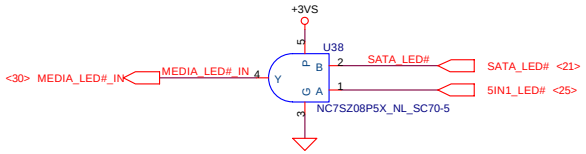

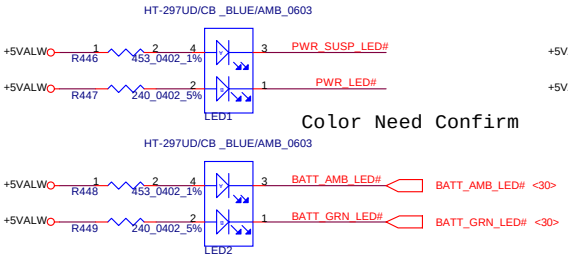

Color Need Confirm

JM70

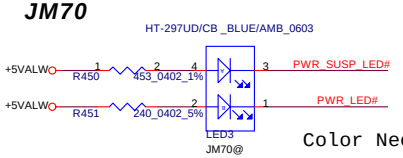

Color Need Confirm

JM70	JV70
1.HDD	1.HDD
2.BT_LED	2.BT_LED
3.CAP LED	4.NUM_LED
4.NUM_LED	3.CAP LED

Security Classification	Compal Secret Data		
Issued Date	2008/11/03	Deciphered Date	2009/11/03

THIS SHEET OF ENGINEERING DRAWING IS THE PROPRIETARY PROPERTY OF COMPAL ELECTRONICS, INC. AND CONTAINS CONFIDENTIAL AND TRADE SECRET INFORMATION. THIS SHEET MAY NOT BE TRANSFERED FROM THE CUSTODY OF THE COMPETENT DIVISION OF R&D DEPARTMENT EXCEPT AS AUTHORIZED BY COMPAL ELECTRONICS, INC. NEITHER THIS SHEET NOR THE INFORMATION IT CONTAINS MAY BE USED BY OR DISCLOSED TO ANY THIRD PARTY WITHOUT PRIOR WRITTEN CONSENT OF COMPAL ELECTRONICS, INC.

Compal Electronics, Inc.

Title: BIOS, I/O Port & K/B Connector

Size: Custom | Document Number: KBYF0 LA-5051P | Rev: 0.3

Date: Tuesday, February 03, 2009 | Sheet 31 of 46

Power Button

ON/OFF switch

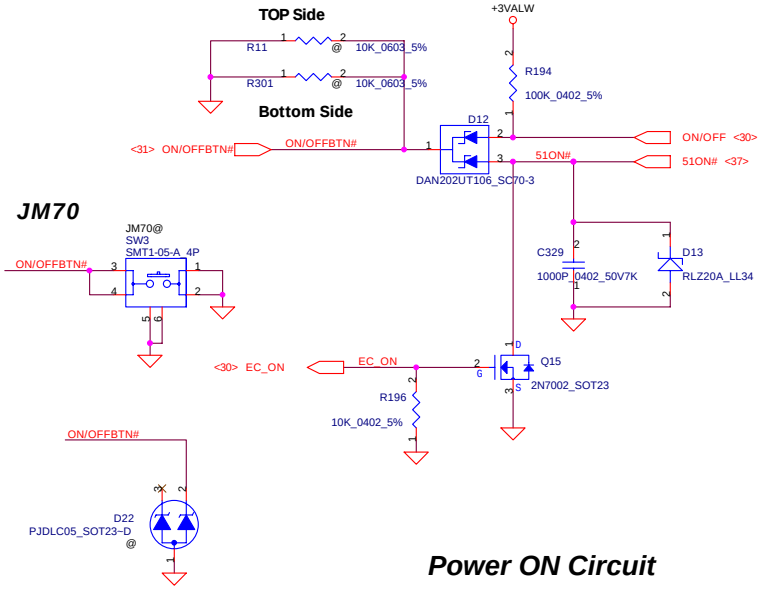

HDA MDC Conn.

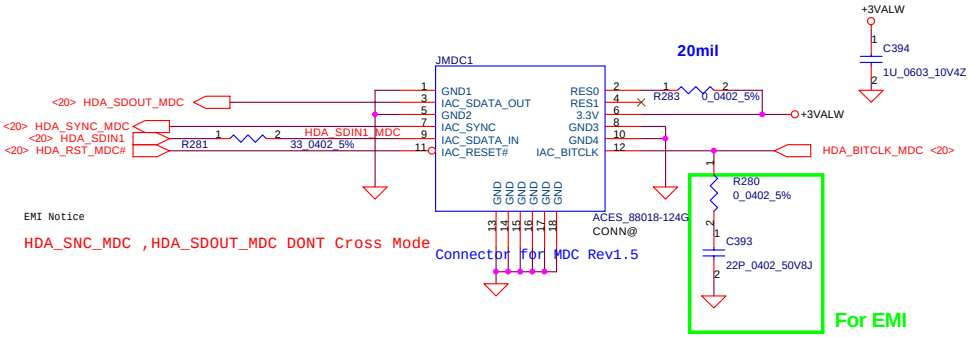

JM70 CIR

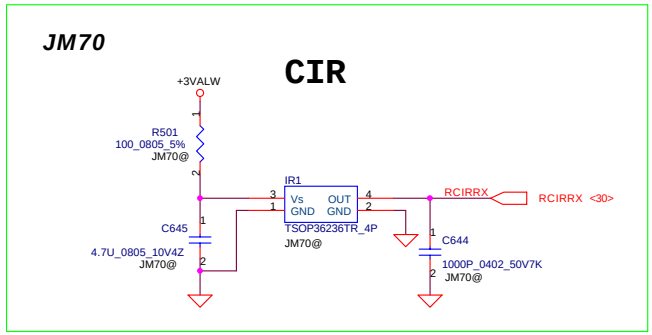

Power ON Circuit

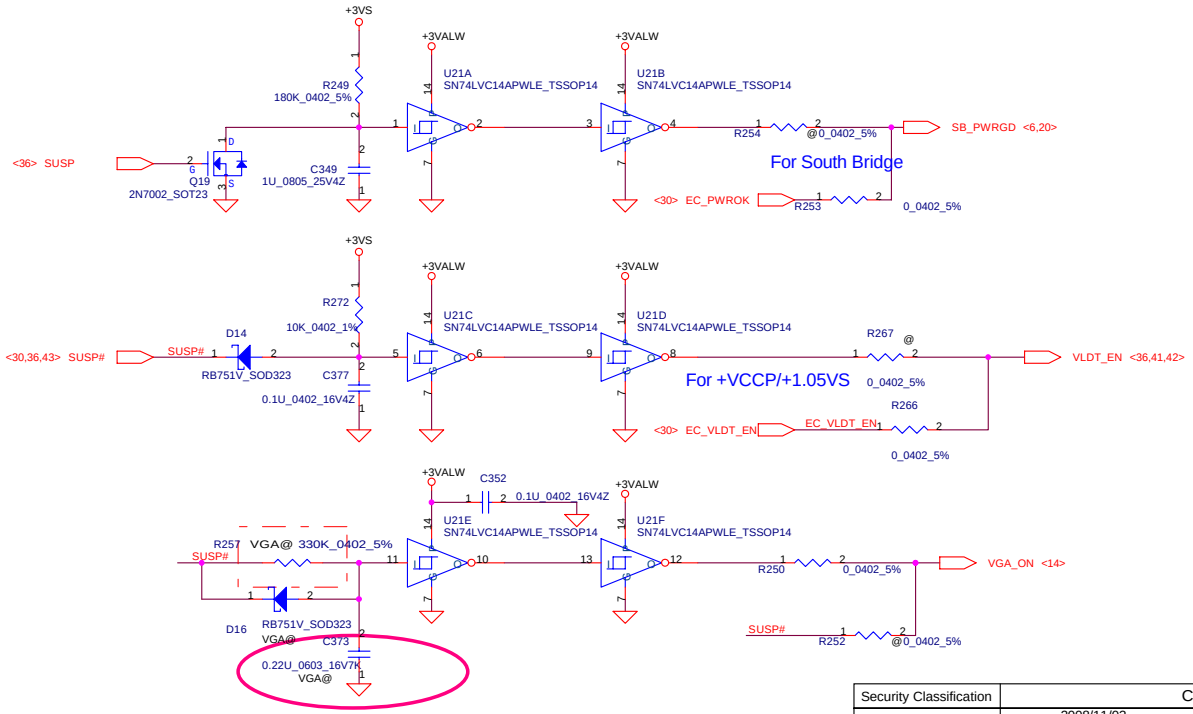

Lid Switch

(Hall Effect Switch)

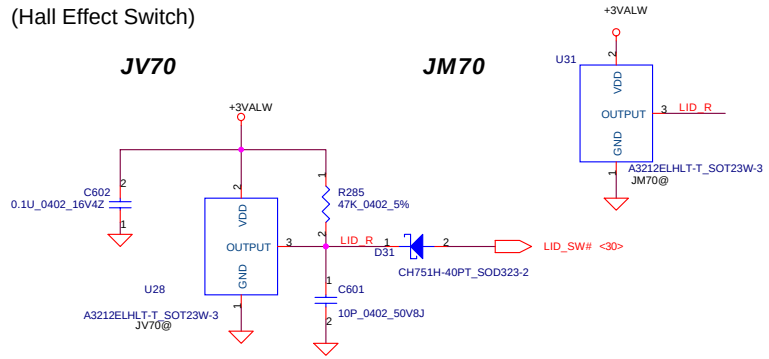

Security Classification	Compal Secret Data		
Issued Date	2008/11/03	Deciphered Date	2009/11/03

THIS SHEET OF ENGINEERING DRAWING IS THE PROPRIETARY PROPERTY OF COMPAL ELECTRONICS, INC. AND CONTAINS CONFIDENTIAL AND TRADE SECRET INFORMATION. THIS SHEET MAY NOT BE TRANSFERED FROM THE CUSTODY OF THE COMPETENT DIVISION OF R&D DEPARTMENT EXCEPT AS AUTHORIZED BY COMPAL ELECTRONICS, INC. NEITHER THIS SHEET NOR THE INFORMATION IT CONTAINS MAY BE USED BY OR DISCLOSED TO ANY THIRD PARTY WITHOUT PRIOR WRITTEN CONSENT OF COMPAL ELECTRONICS, INC.

Compal Electronics, Inc.

Title: Power OK, Reset and RTC Circuit, TP

Size: B | Document Number: KBYF0 LA-5051P | Rev: 0.3

Date: Tuesday, February 03, 2009 | Sheet 32 of 46

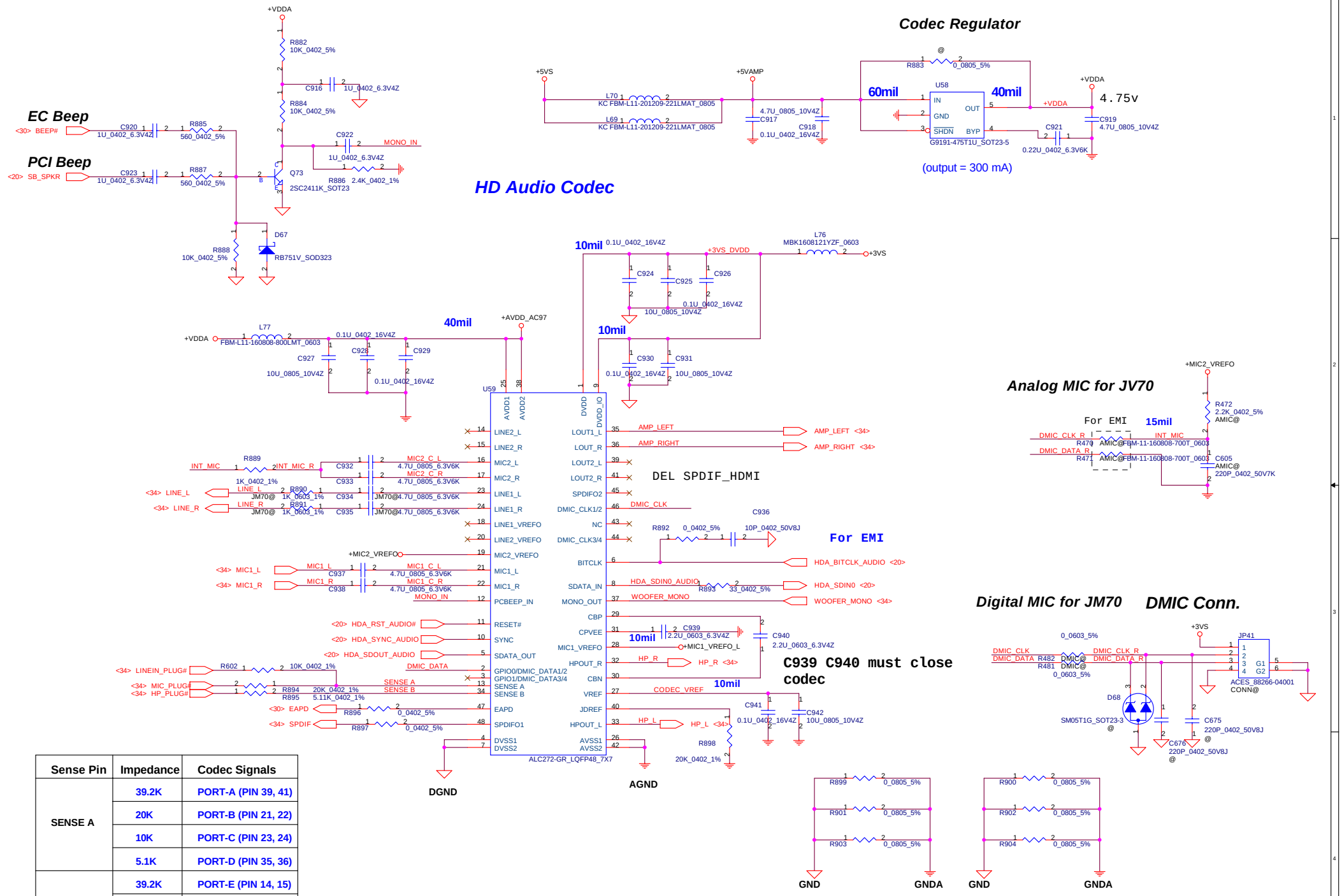

Sense Pin	Impedance	Codec Signals
SENSE A	39.2K	PORT-A (PIN 39, 41)
	20K	PORT-B (PIN 21, 22)
	10K	PORT-C (PIN 23, 24)
	5.1K	PORT-D (PIN 35, 36)
SENSE B	39.2K	PORT-E (PIN 14, 15)
	20K	PORT-F (PIN 16, 17)
	10K	PORT-G (PIN 43, 44)
	5.1K	PORT-H (PIN 45, 46)

Security Classification	Compal Secret Data		
Issued Date	2008/11/03	Deciphered Date	2009/11/03

THIS SHEET OF ENGINEERING DRAWING IS THE PROPRIETARY PROPERTY OF COMPAL ELECTRONICS, INC. AND CONTAINS CONFIDENTIAL AND TRADE SECRET INFORMATION. THIS SHEET MAY NOT BE TRANSFERED FROM THE CUSTODY OF THE COMPETENT DIVISION OF R&D DEPARTMENT EXCEPT AS AUTHORIZED BY COMPAL ELECTRONICS, INC. NEITHER THIS SHEET NOR THE INFORMATION IT CONTAINS MAY BE USED BY OR DISCLOSED TO ANY THIRD PARTY WITHOUT PRIOR WRITTEN CONSENT OF COMPAL ELECTRONICS, INC.

Compal Electronics, Inc.

Title: HD Audio Codec ALC268

Size: B | Document Number: KBYF0 LA-5051P | Rev: 0.3

Date: Tuesday, February 03, 2009 | Sheet 33 of 46

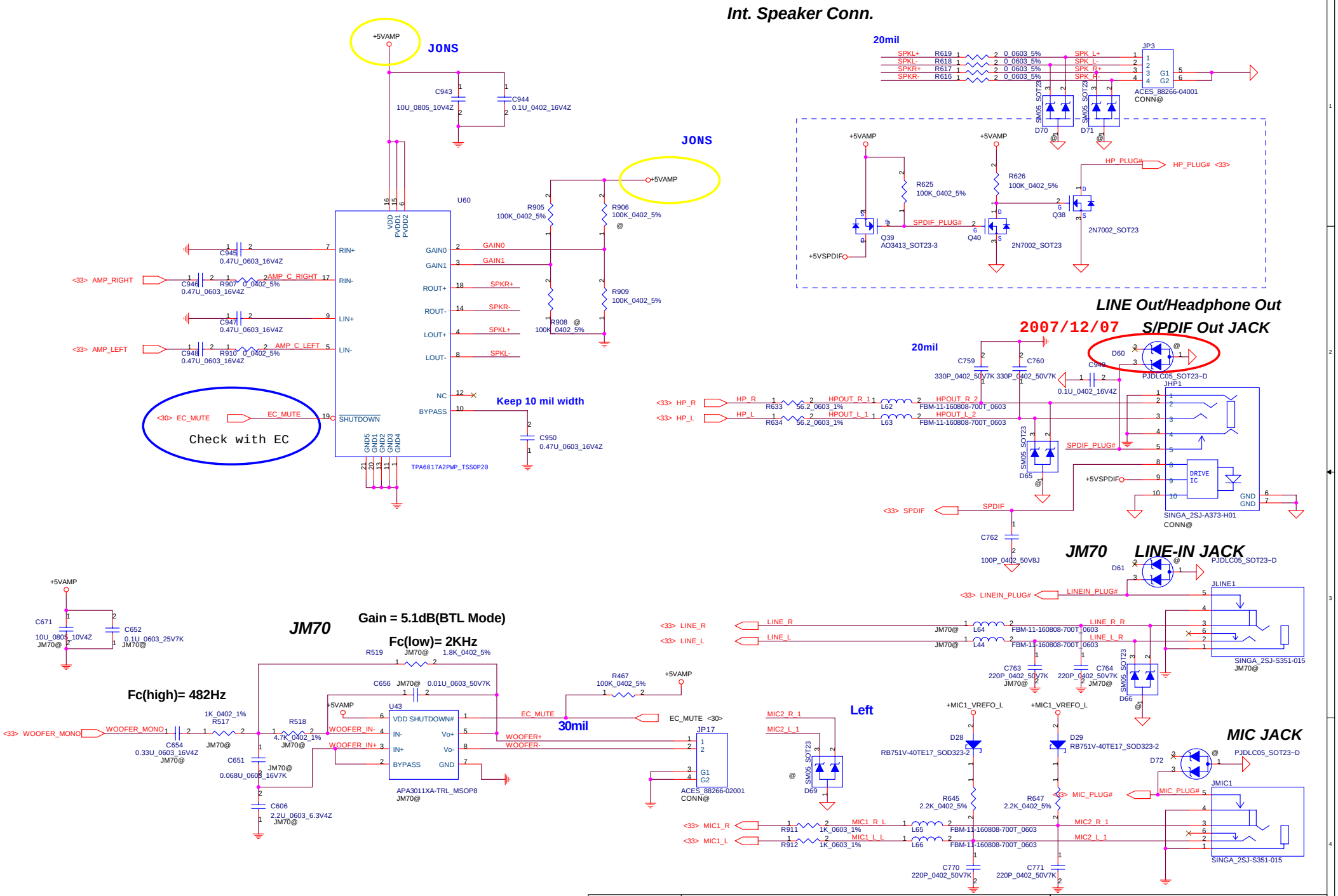

Security Classification	Compal Secret Data		
Issued Date	2008/11/03	Deciphered Date	2009/11/03

THIS SHEET OF ENGINEERING DRAWING IS THE PROPRIETARY PROPERTY OF COMPAL ELECTRONICS, INC. AND CONTAINS CONFIDENTIAL AND TRADE SECRET INFORMATION. THIS SHEET MAY NOT BE TRANSFERED FROM THE CUSTODY OF THE COMPETENT DIVISION OF R&D DEPARTMENT EXCEPT AS AUTHORIZED BY COMPAL ELECTRONICS, INC. NEITHER THIS SHEET NOR THE INFORMATION IT CONTAINS MAY BE USED BY OR DISCLOSED TO ANY THIRD PARTY WITHOUT PRIOR WRITTEN CONSENT OF COMPAL ELECTRONICS, INC.

Compal Electronics, Inc.

Title: Amplifier & Audio Jack

Size: B | Document Number: KBYF0 LA-5051P | Rev: 0.3

Date: Tuesday, February 03, 2009 | Sheet 34 of 46

FAN1 Conn

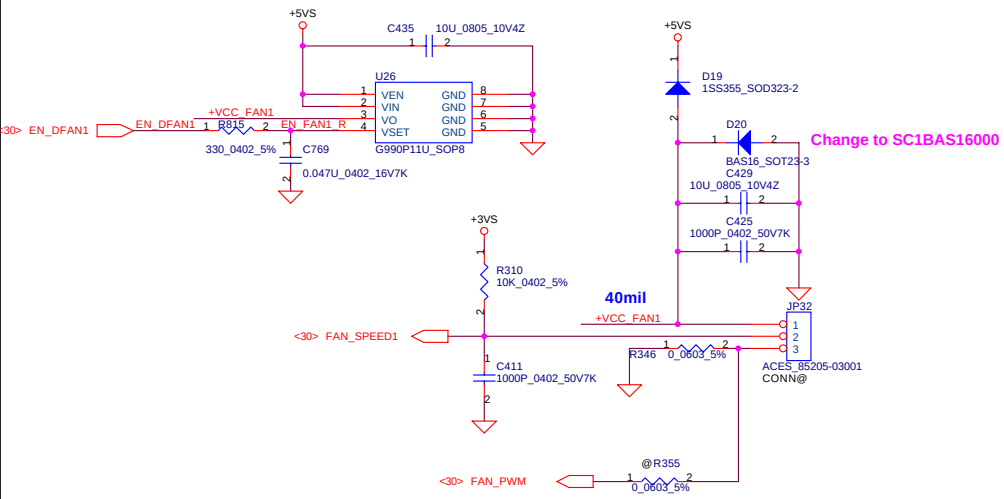

R355 close to JP32

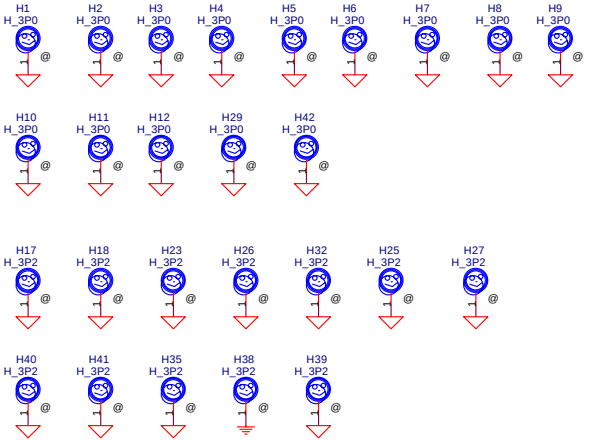

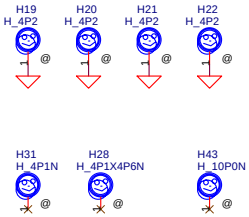

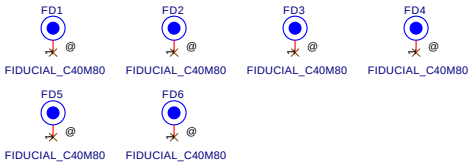

Security Classification	Compal Secret Data		
Issued Date	2008/11/03	Deciphered Date	2009/11/03

THIS SHEET OF ENGINEERING DRAWING IS THE PROPRIETARY PROPERTY OF COMPAL ELECTRONICS, INC. AND CONTAINS CONFIDENTIAL AND TRADE SECRET INFORMATION. THIS SHEET MAY NOT BE TRANSFERED FROM THE CUSTODY OF THE COMPETENT DIVISION OF R&D DEPARTMENT EXCEPT AS AUTHORIZED BY COMPAL ELECTRONICS, INC. NEITHER THIS SHEET NOR THE INFORMATION IT CONTAINS MAY BE USED BY OR DISCLOSED TO ANY THIRD PARTY WITHOUT PRIOR WRITTEN CONSENT OF COMPAL ELECTRONICS, INC.

Compal Electronics, Inc.

Title: FAN & Screw Hole

Size: B | Document Number: KBYF0 LA-5051P | Rev: 0.3

Date: Tuesday, February 03, 2009 | Sheet 35 of 46

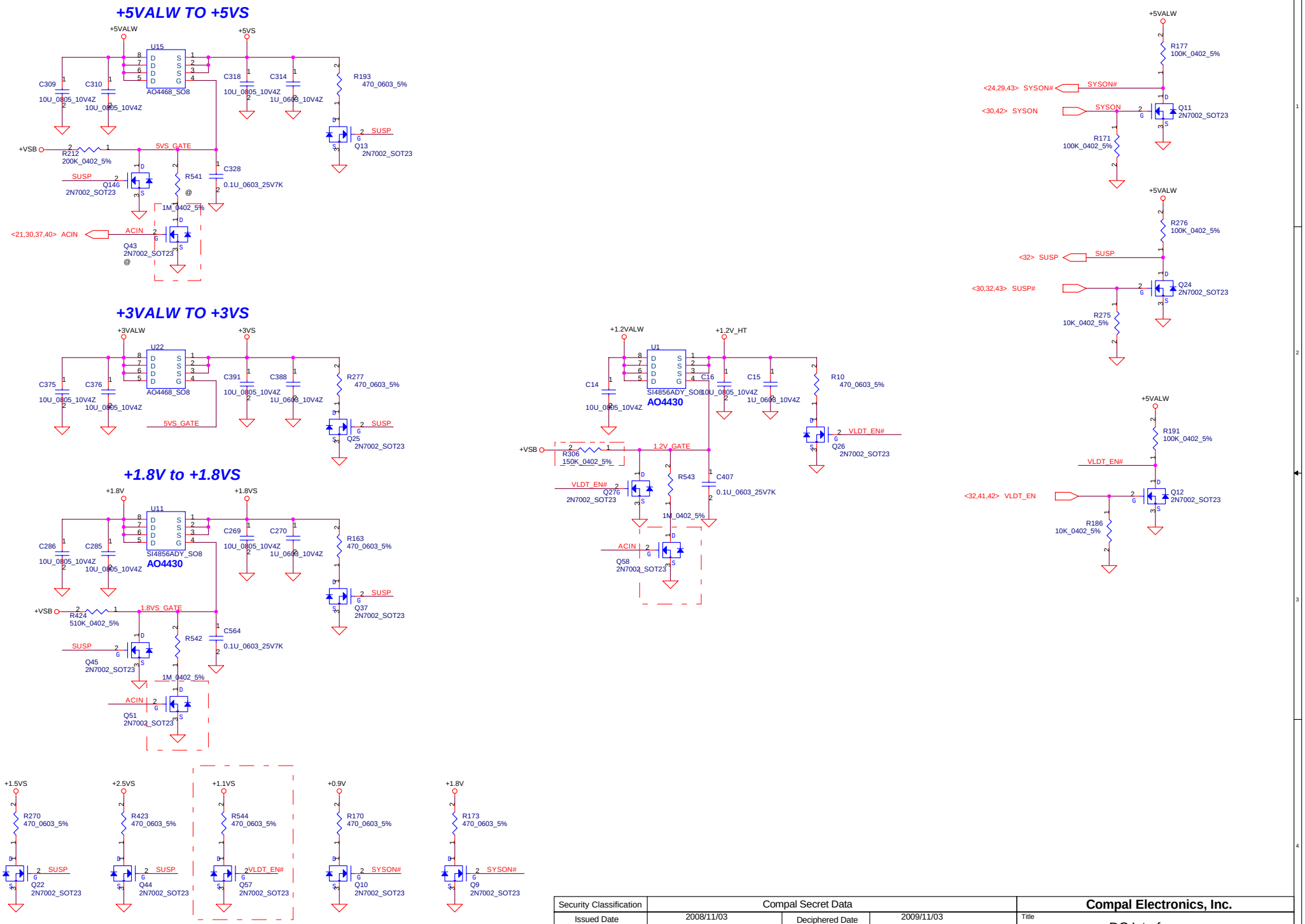

Security Classification	Compal Secret Data		
Issued Date	2008/11/03	Deciphered Date	2009/11/03

THIS SHEET OF ENGINEERING DRAWING IS THE PROPRIETARY PROPERTY OF COMPAL ELECTRONICS, INC. AND CONTAINS CONFIDENTIAL AND TRADE SECRET INFORMATION. THIS SHEET MAY NOT BE TRANSFERED FROM THE CUSTODY OF THE COMPETENT DIVISION OF R&D DEPARTMENT EXCEPT AS AUTHORIZED BY COMPAL ELECTRONICS, INC. NEITHER THIS SHEET NOR THE INFORMATION IT CONTAINS MAY BE USED BY OR DISCLOSED TO ANY THIRD PARTY WITHOUT PRIOR WRITTEN CONSENT OF COMPAL ELECTRONICS, INC.

Compal Electronics, Inc.

Title: DC Interface

Size: B | Document Number: KBYF0 LA-5051P | Rev: 0.3

Date: Tuesday, February 03, 2009 | Sheet 36 of 46

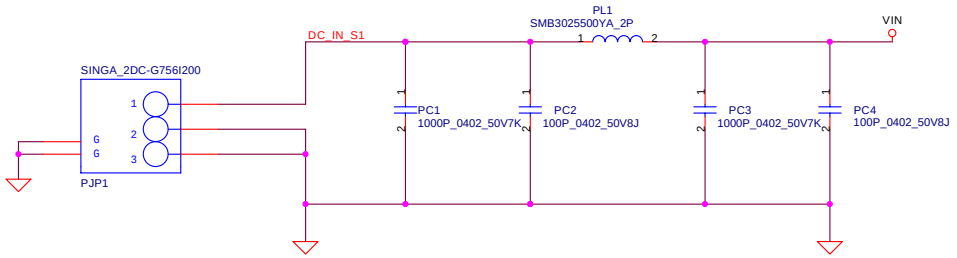

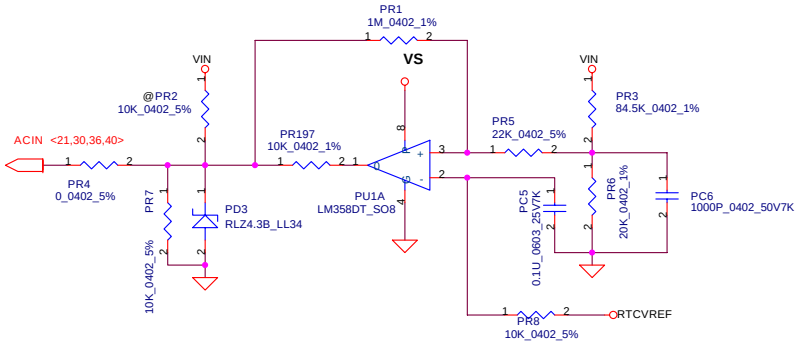

RTC Battery

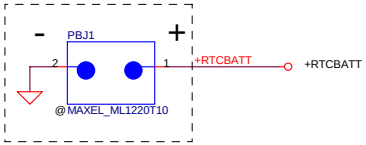

SP093MX0000

Vin Dectector

	Min.	Typ	Max.
H-->L	16.976V	17.525V	17.728V
L-->H	17.430V	17.901V	18.384V

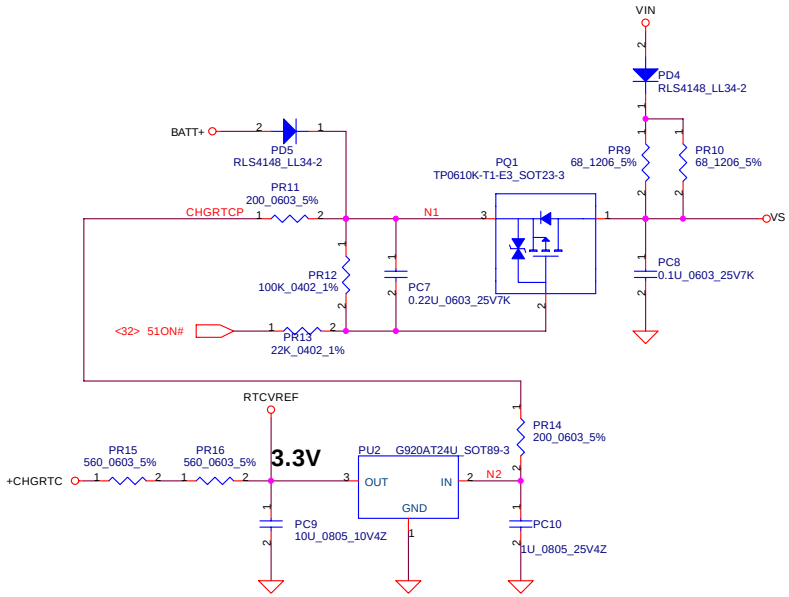

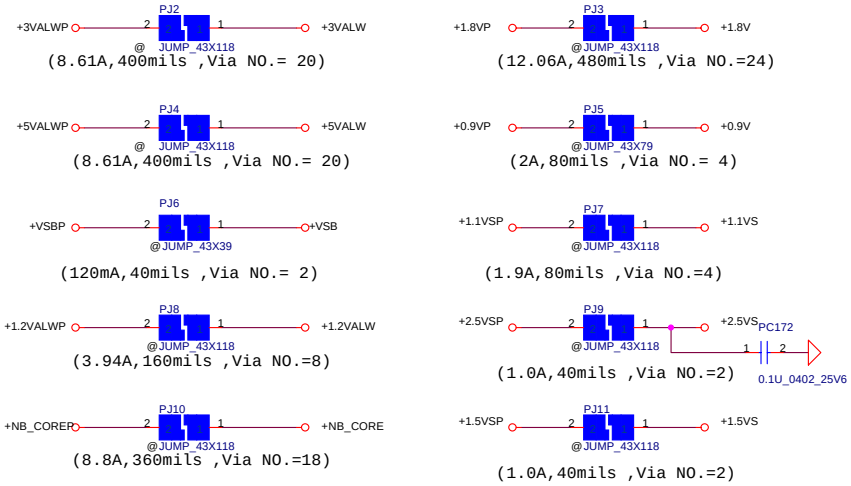

Security Classification	Compal Secret Data		
Issued Date	2008/11/03	Deciphered Date	2009/11/03

THIS SHEET OF ENGINEERING DRAWING IS THE PROPRIETARY PROPERTY OF COMPAL ELECTRONICS, INC. AND CONTAINS CONFIDENTIAL AND TRADE SECRET INFORMATION. THIS SHEET MAY NOT BE TRANSFERED FROM THE CUSTODY OF THE COMPETENT DIVISION OF R&D DEPARTMENT EXCEPT AS AUTHORIZED BY COMPAL ELECTRONICS, INC. NEITHER THIS SHEET NOR THE INFORMATION IT CONTAINS MAY BE USED BY OR DISCLOSED TO ANY THIRD PARTY WITHOUT PRIOR WRITTEN CONSENT OF COMPAL ELECTRONICS, INC.

Compal Electronics, Inc.

Title: DCIN & DETECTOR

Size: | Document Number: KBKC0_KBYF0 | Rev: 0.3

Date: Tuesday, February 03, 2009 | Sheet 37 of 46

PH1 under CPU botten side :
CPU thermal protection at 92 degree C
Recovery at 56 degree C

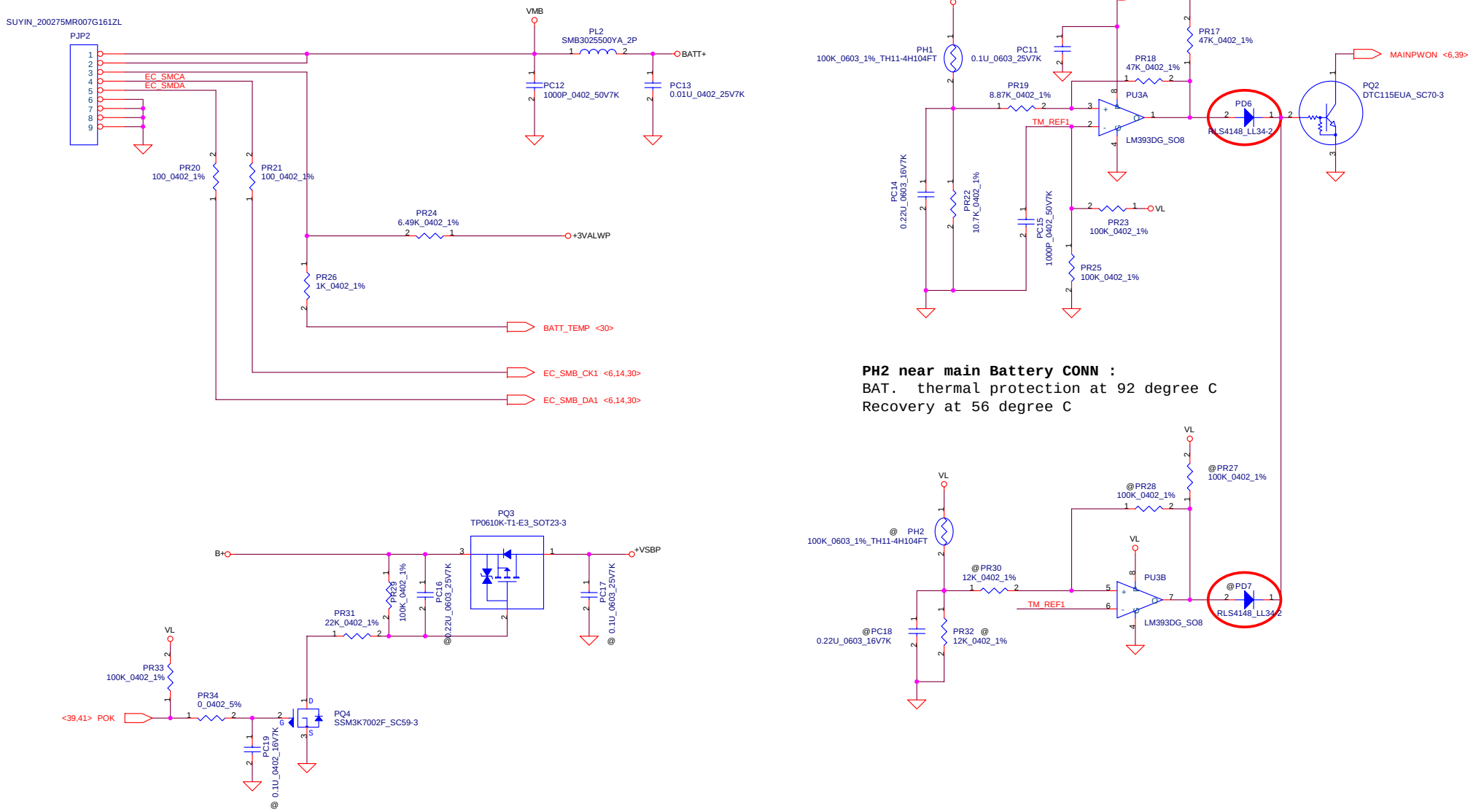

PH2 near main Battery CONN :
BAT. thermal protection at 92 degree C
Recovery at 56 degree C

Security Classification	Compal Secret Data			Compal Electronics, Inc.
Issued Date	2008/11/03	Deciphered Date	2009/11/03	Title: BATTERY CONN / OTP
				Size: Document Number: KBKC0_KBYF0 — Rev: 0.3
				Date: Tuesday, February 03, 2009 — Sheet 38 of 46

THIS SHEET OF ENGINEERING DRAWING IS THE PROPRIETARY PROPERTY OF COMPAL ELECTRONICS, INC. AND CONTAINS CONFIDENTIAL AND TRADE SECRET INFORMATION. THIS SHEET MAY NOT BE TRANSFERED FROM THE CUSTODY OF THE COMPETENT DIVISION OF R&D DEPARTMENT EXCEPT AS AUTHORIZED BY COMPAL ELECTRONICS, INC. NEITHER THIS SHEET NOR THE INFORMATION IT CONTAINS MAY BE USED BY OR DISCLOSED TO ANY THIRD PARTY WITHOUT PRIOR WRITTEN CONSENT OF COMPAL ELECTRONICS, INC.

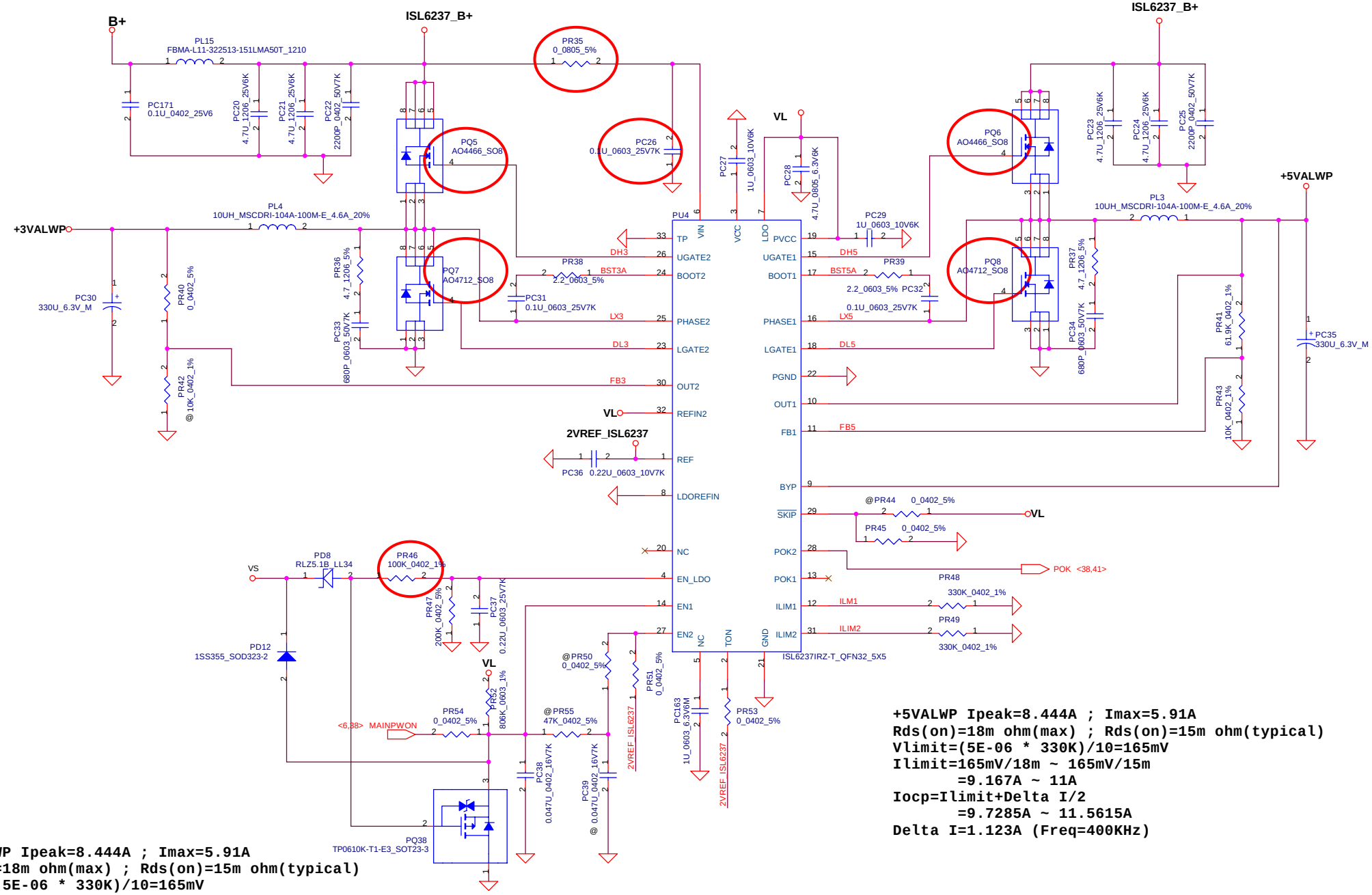

+5VALWP Ipeak=8.444A ; Imax=5.91A
Rds(on)=18m ohm(max) ; Rds(on)=15m ohm(typical)
Vlimit=(5E-06 * 330K)/10=165mV
Ilimit=165mV/18m ~ 165mV/15m
=9.167A ~ 11A
Iocp=Ilimit+Delta I/2
=9.7285A ~ 11.5615A
Delta I=1.123A (Freq=400KHz)

+3.3VALWP Ipeak=8.444A ; Imax=5.91A
Rds(on)=18m ohm(max) ; Rds(on)=15m ohm(typical)
Vlimit=(5E-06 * 330K)/10=165mV
Ilimit=165mV/18m ~ 165mV/15m
=9.167A ~ 11A
Iocp=Ilimit+Delta I/2
=9.721A ~ 11.554A
Delta I=1.108A (Freq=300KHz)

Security Classification	Compal Secret Data		
Issued Date	2008/11/03	Deciphered Date	2009/11/03

THIS SHEET OF ENGINEERING DRAWING IS THE PROPRIETARY PROPERTY OF COMPAL ELECTRONICS, INC. AND CONTAINS CONFIDENTIAL AND TRADE SECRET INFORMATION. THIS SHEET MAY NOT BE TRANSFERED FROM THE CUSTODY OF THE COMPETENT DIVISION OF R&D DEPARTMENT EXCEPT AS AUTHORIZED BY COMPAL ELECTRONICS, INC. NEITHER THIS SHEET NOR THE INFORMATION IT CONTAINS MAY BE USED BY OR DISCLOSED TO ANY THIRD PARTY WITHOUT PRIOR WRITTEN CONSENT OF COMPAL ELECTRONICS, INC.

Compal Electronics, Inc.

Title: +5V/+3V

Size: Custom | Document Number: KBKC0_KBYF0 | Rev: 0.3

Date: Tuesday, February 03, 2009 | Sheet 39 of 46

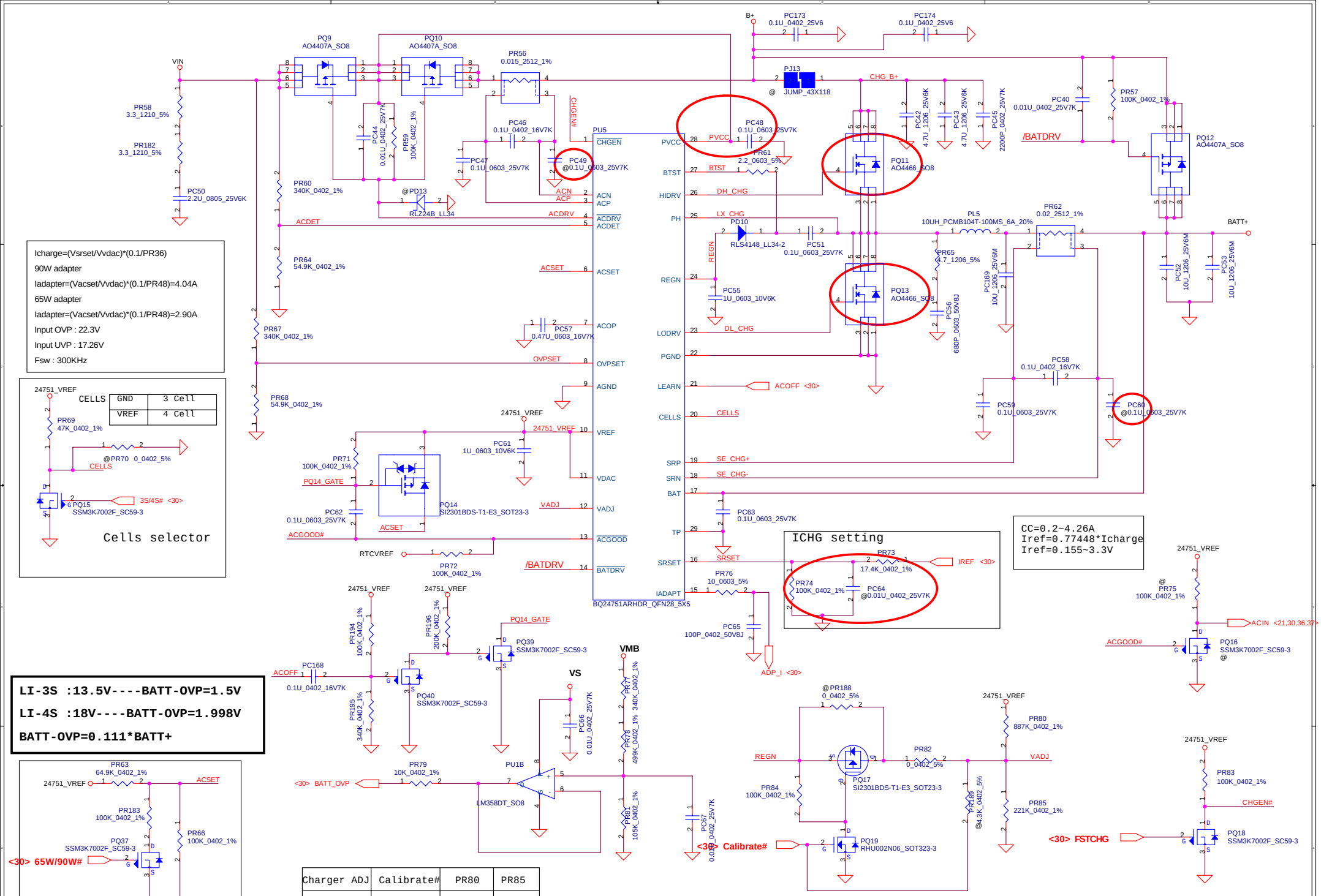

Charger ADJ	Calibrate#	PR80	PR85
4.0V	L	@	0
4.1V	L	887K	221K
4.2V	H	887K	221K

Security Classification	Compal Secret Data		
Issued Date	2008/11/03	Deciphered Date	2009/11/03

THIS SHEET OF ENGINEERING DRAWING IS THE PROPRIETARY PROPERTY OF COMPAL ELECTRONICS, INC. AND CONTAINS CONFIDENTIAL AND TRADE SECRET INFORMATION. THIS SHEET MAY NOT BE TRANSFERED FROM THE CUSTODY OF THE COMPETENT DIVISION OF R&D DEPARTMENT EXCEPT AS AUTHORIZED BY COMPAL ELECTRONICS, INC. NEITHER THIS SHEET NOR THE INFORMATION IT CONTAINS MAY BE USED BY OR DISCLOSED TO ANY THIRD PARTY WITHOUT PRIOR WRITTEN CONSENT OF COMPAL ELECTRONICS, INC.

Compal Electronics, Inc.

Title: CHARGER

Size | Document Number: KBKC0_KBYF0 | Rev: 0.3

Date: Tuesday, February 03, 2009 | Sheet 40 of 46

	POWER_SEL
HIGH	1.0V
LOW	1.1V

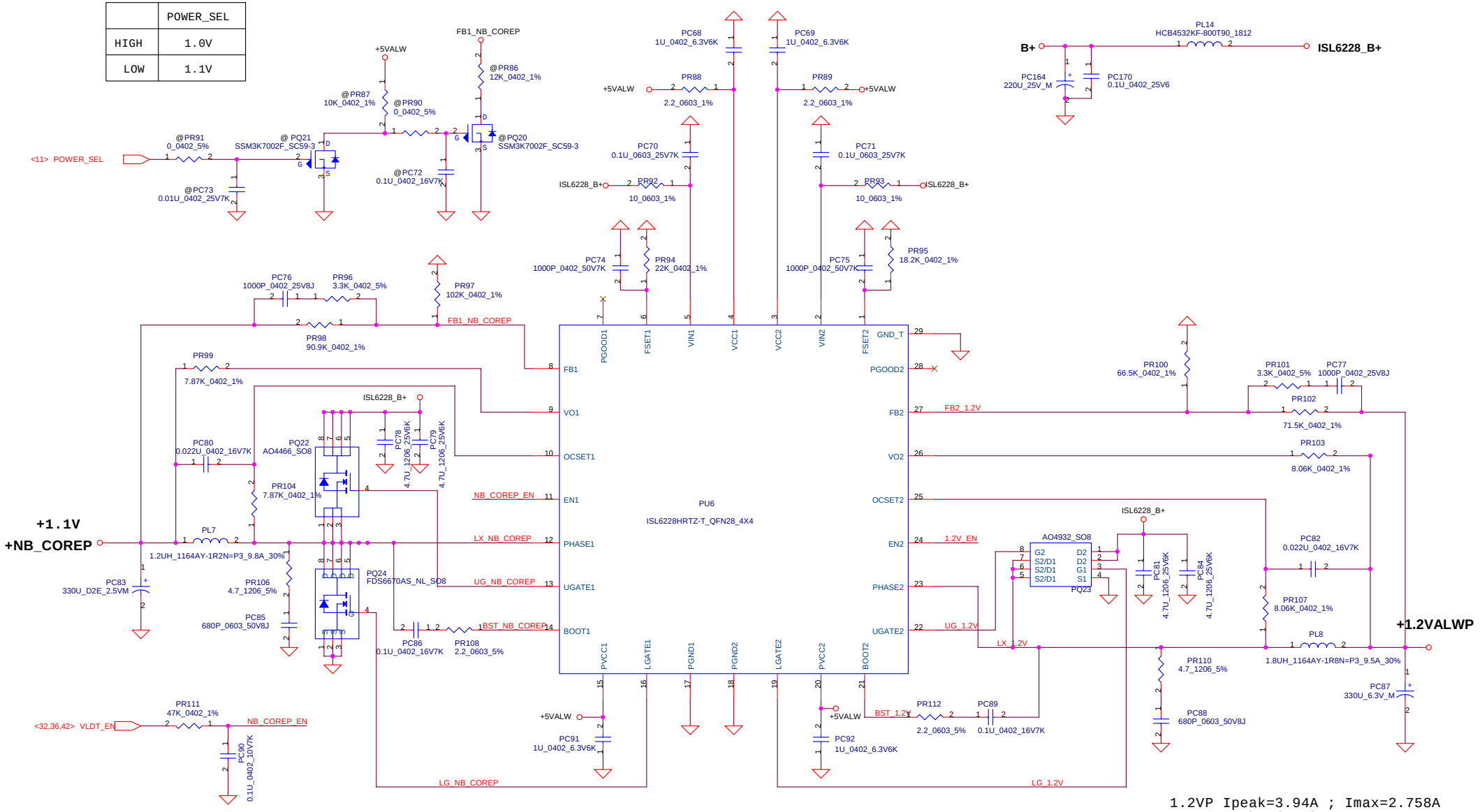

1.1VP Ipeak=8.9A ; Imax=6.23A
DCR=6m ohm (max)
Rocset=(Iocp*DCR)/10E-06=7.68K ohm
Iocp=9.846A(1.3*DCR)
Csen=L/(Rocset*DCR)=0.022uF

Freq=303KHz
Rfset=1/(1.5E-10 * Freq)=22K

1.2VP Ipeak=3.94A ; Imax=2.758A
DCR=10m ohm (max)
Rocset=(Iocp*DCR)/10E-06=6.65K ohm
Iocp=5.542A(1.2*DCR)
Csen=L/(Rocset*DCR)=0.027uF

Freq=366KHz
Rfset=1/(1.5E-10 * Freq)=18.2K

Security Classification	Compal Secret Data		
Issued Date	2008/11/03	Deciphered Date	2009/11/03

THIS SHEET OF ENGINEERING DRAWING IS THE PROPRIETARY PROPERTY OF COMPAL ELECTRONICS, INC. AND CONTAINS CONFIDENTIAL AND TRADE SECRET INFORMATION. THIS SHEET MAY NOT BE TRANSFERED FROM THE CUSTODY OF THE COMPETENT DIVISION OF R&D DEPARTMENT EXCEPT AS AUTHORIZED BY COMPAL ELECTRONICS, INC. NEITHER THIS SHEET NOR THE INFORMATION IT CONTAINS MAY BE USED BY OR DISCLOSED TO ANY THIRD PARTY WITHOUT PRIOR WRITTEN CONSENT OF COMPAL ELECTRONICS, INC.

Compal Electronics, Inc.

Title: NB_COREP / 1.2VSB

Size | Document Number: **KBKC0_KBYF0** | Rev: 0.3

Date: Tuesday, February 03, 2009 | Sheet 41 of 46

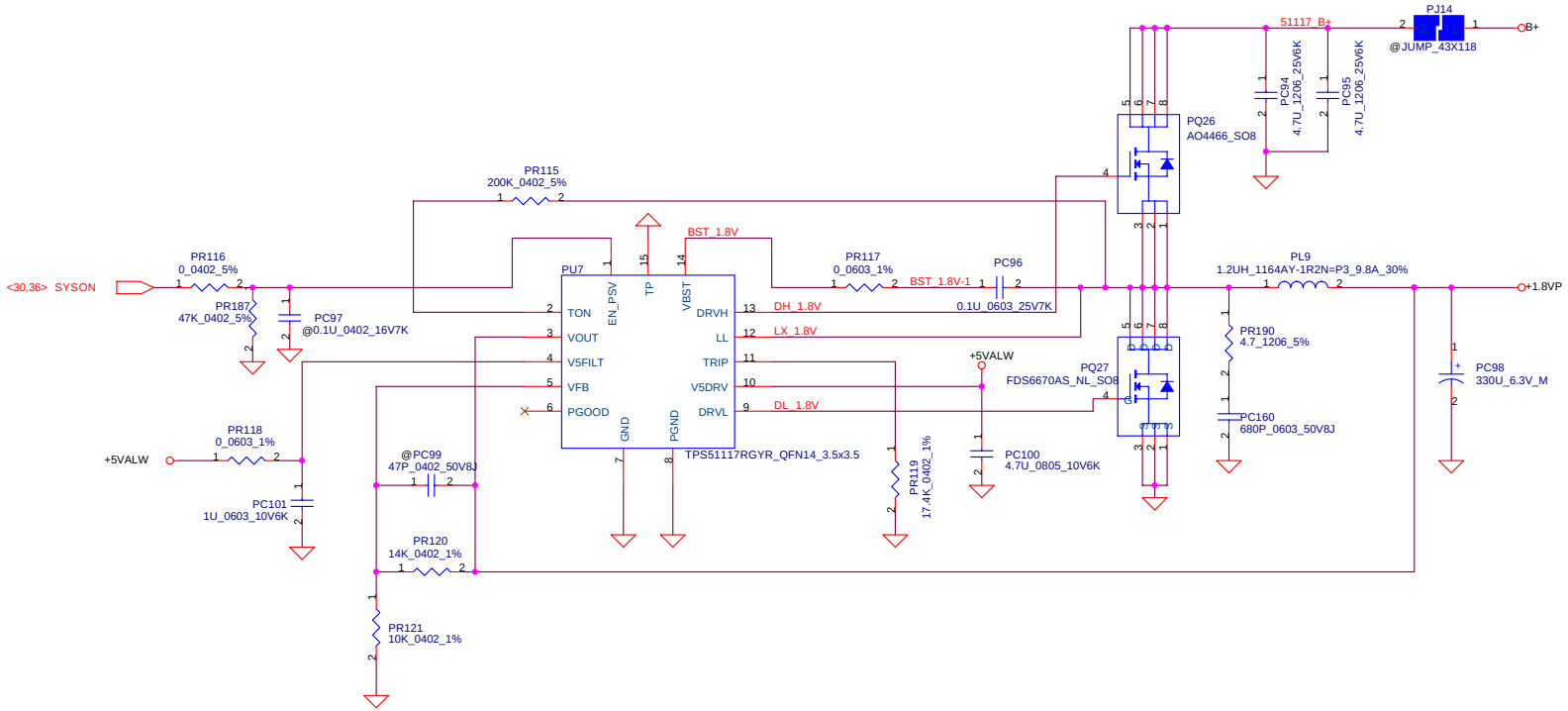


```
VFB=0.75V
Vo=VFB*(1+PR120/PR121)=1.8V
Ton=19E-12*Ron*(((2/3)*Vo+100mV)/Vin)+50ns=3.1E-07
Freq=305KHz

Cesr=15m ohm
Ipeak=12.6A  Imax=8.82A
Delta I=((19-1.8)*(1.8/19))/(L*Freq)=5.332A
Vtrip=Rtrip*10uA=0.24V
Iocp-min=Vtrip/Rdsonmax*1.4+2.666=17.573A
Iocp-max=Vtrip/Rdsontyp*1.2+2.666=26.908A
Iocp=17.573~26.908A
```

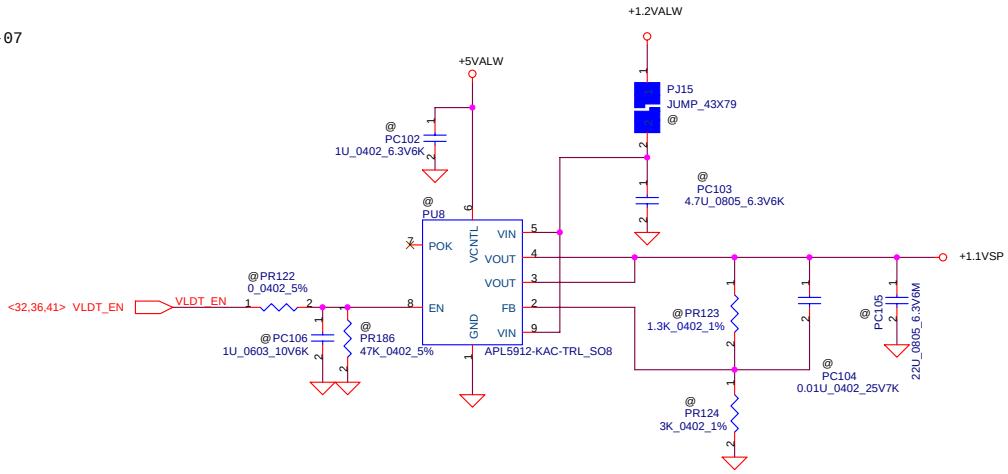

Security Classification	Compal Secret Data		
Issued Date	2008/11/03	Deciphered Date	2009/11/03

THIS SHEET OF ENGINEERING DRAWING IS THE PROPRIETARY PROPERTY OF COMPAL ELECTRONICS, INC. AND CONTAINS CONFIDENTIAL AND TRADE SECRET INFORMATION. THIS SHEET MAY NOT BE TRANSFERED FROM THE CUSTODY OF THE COMPETENT DIVISION OF R&D DEPARTMENT EXCEPT AS AUTHORIZED BY COMPAL ELECTRONICS, INC. NEITHER THIS SHEET NOR THE INFORMATION IT CONTAINS MAY BE USED BY OR DISCLOSED TO ANY THIRD PARTY WITHOUT PRIOR WRITTEN CONSENT OF COMPAL ELECTRONICS, INC.

Compal Electronics, Inc.

Title: 1.8VSP/+1.1VSP

Size | Document Number: **KBKC0_KBYF0** | Rev: 0.3

Date: Tuesday, February 03, 2009 | Sheet 42 of 46

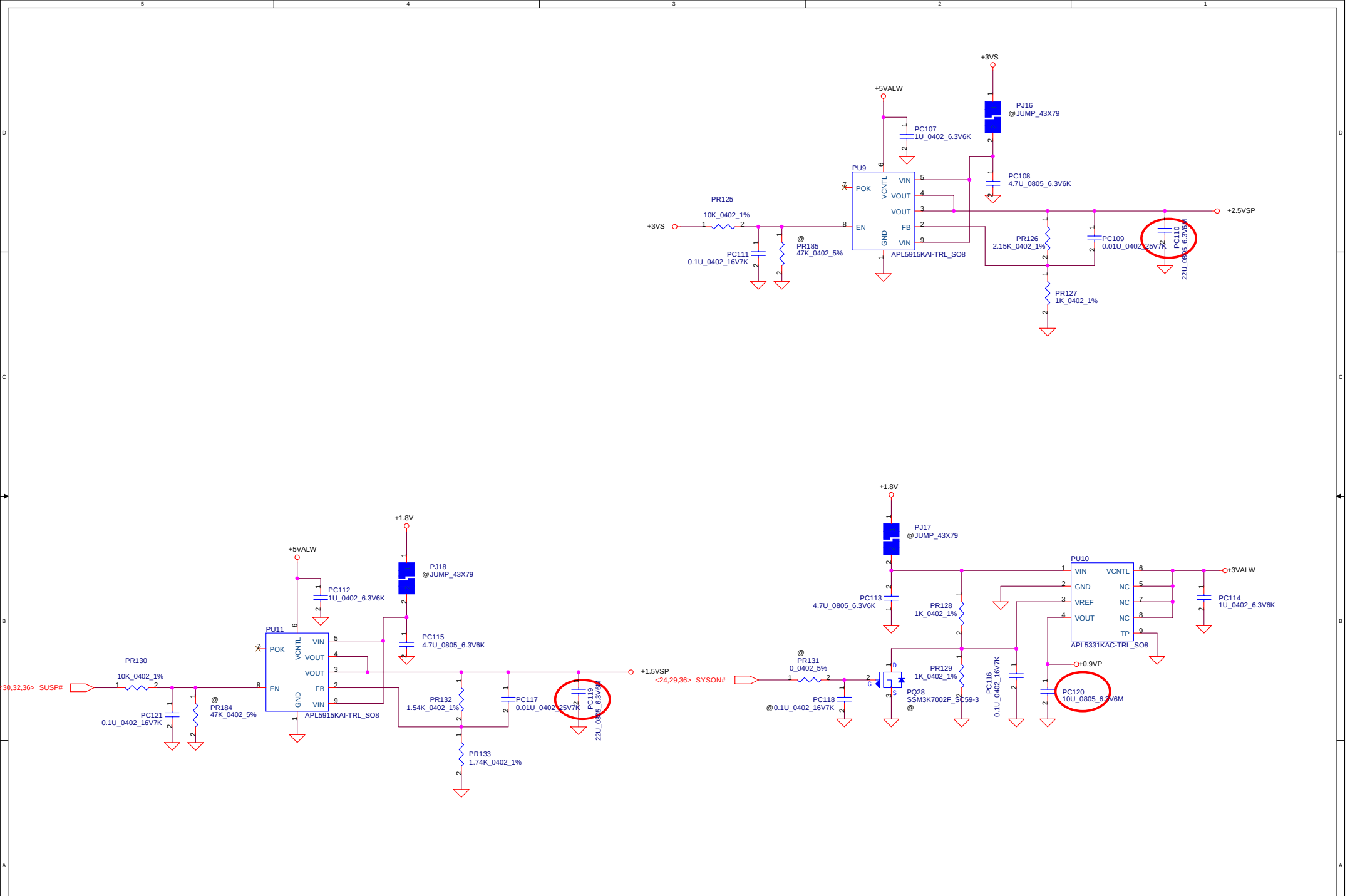

Security Classification	Compal Secret Data		
Issued Date	2008/11/03	Deciphered Date	2009/11/03

THIS SHEET OF ENGINEERING DRAWING IS THE PROPRIETARY PROPERTY OF COMPAL ELECTRONICS, INC. AND CONTAINS CONFIDENTIAL AND TRADE SECRET INFORMATION. THIS SHEET MAY NOT BE TRANSFERED FROM THE CUSTODY OF THE COMPETENT DIVISION OF R&D DEPARTMENT EXCEPT AS AUTHORIZED BY COMPAL ELECTRONICS, INC. NEITHER THIS SHEET NOR THE INFORMATION IT CONTAINS MAY BE USED BY OR DISCLOSED TO ANY THIRD PARTY WITHOUT PRIOR WRITTEN CONSENT OF COMPAL ELECTRONICS, INC.

Compal Electronics, Inc.

Title: 0.9VP//1.5VSP/2.5VSP

Size: | Document Number: **KBKC0_KBYF0** | Rev: 0.3

Date: Tuesday, February 03, 2009 | Sheet 43 of 46

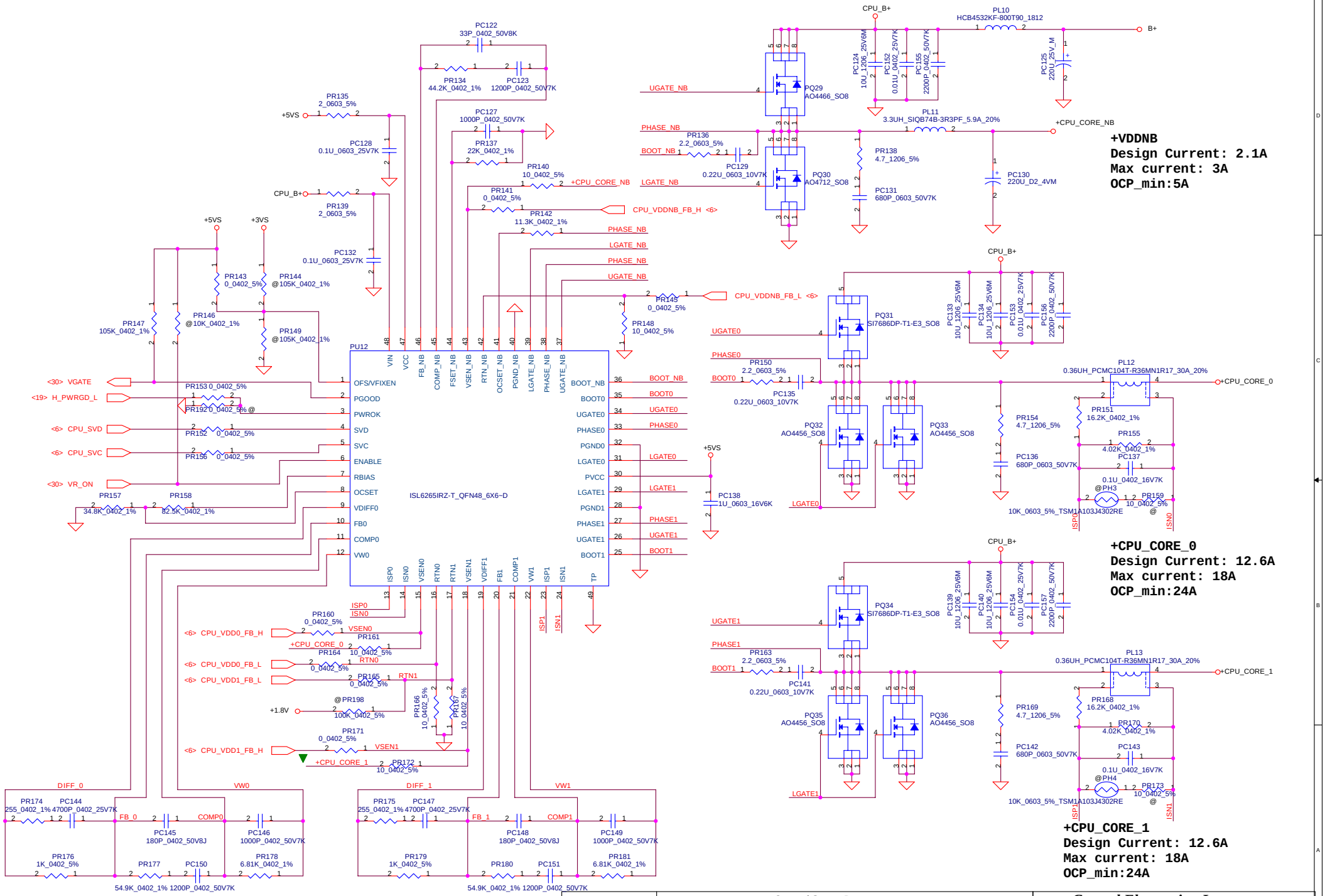

Security Classification	Compal Secret Data		
Issued Date	2008/11/03	Deciphered Date	2009/11/03

THIS SHEET OF ENGINEERING DRAWING IS THE PROPRIETARY PROPERTY OF COMPAL ELECTRONICS, INC. AND CONTAINS CONFIDENTIAL AND TRADE SECRET INFORMATION. THIS SHEET MAY NOT BE TRANSFERED FROM THE CUSTODY OF THE COMPETENT DIVISION OF R&D DEPARTMENT EXCEPT AS AUTHORIZED BY COMPAL ELECTRONICS, INC. NEITHER THIS SHEET NOR THE INFORMATION IT CONTAINS MAY BE USED BY OR DISCLOSED TO ANY THIRD PARTY WITHOUT PRIOR WRITTEN CONSENT OF COMPAL ELECTRONICS, INC.

Compal Electronics, Inc.

Title: +CPU_CORE

Size: Custom | Document Number: KBKC0_KBYF0 | Rev: 0.3

Date: Tuesday, February 03, 2009 | Sheet 44 of 46

Version change list (P.I.R. List)

for PWR

Item	Fixed Issue	Reason for change	Rev.	PG#	Modify List	Date	Phase
1	EMI request.	EMI request.	0.1	40	Change PR38,PR39,PR108,PR112,PR136,PR150,PR163 from SD013000080 to SD013220B80.	08, 12/24	to DVT
2	EMI request.	EMI request.	0.1	40	Add PC170,PC171,PC172,PC173,PC174 SE00000G880 S CER CAP 0.1U 25V K X5R 0402	08, 12/24	to DVT
3	EMI request.	EMI request.	0.1	39	Add PL15 SM010016410 S SUPPRE_ KC FBMA-L11-322513-151LMA50T	08, 12/24	to DVT
4	EMI request.	EMI request.	0.1	41	Add PL14 SM010018210 S SUPPRE_ TAI-TECH HCB4532KF -800T90 1812	08, 12/24	to DVT
5	Link CIS error.	Link CIS error.	0.1	40	Change PQ9, PQ10, PQ12 from SB944070000 S TR AO4407 1P SO8 W/D to SB00000DL00 S TR AO4407A 1P SO8	08, 12/24	to DVT
6	cost down	cost down	0.1	40	Change PC30 from SGA19331360 S POLY C 330U 6.3V M D3L ESR25M TPE H2.8 to SF000001G00 S_A-P_CAP 330U 6.3V M 6.3X5.7 LESR14M ME	08, 12/24	to DVT
7	cost down	cost down	0.1	40	Change PC35 from SGA20151320 S POLY C 150U 6.3V M D2E TPE ESR18 H1.8 to SF000001G00 S_A-P_CAP 330U 6.3V M 6.3X5.7 LESR14M ME	08, 12/24	to DVT
8	cost down	cost down	0.1	41, 42	Change PC87, PC98 from SGA19331D00 S POLY C 330U 2.5V M D2 TPE LESR15M H1.8 to SF000001G00 S_A-P_CAP 330U 6.3V M 6.3X5.7 LESR14M ME	08, 12/24	to DVT
9	schematic update.	schematic update.	0.1	44	Delete PR198 SD028100380 S RES 1/16W 100K +-5% 0402	08, 12/24	to DVT
10	layout space too small.	layout space too small.	0.1	41	Change PQ23 from SB00000CG00 S TR AO4466 1N SO8 to SB00000BG00 S TR AO4932 2N SO8 Delete PQ25 SB00000AJ00 S TR AO4712 1N SO8	08, 12/24	to DVT
11							
12							
13							
14							
15							
16							
17							
18							

Security Classification	Compal Secret Data		
Issued Date	2008/11/03	Deciphered Date	2009/11/03

THIS SHEET OF ENGINEERING DRAWING IS THE PROPRIETARY PROPERTY OF COMPAL ELECTRONICS, INC. AND CONTAINS CONFIDENTIAL AND TRADE SECRET INFORMATION. THIS SHEET MAY NOT BE TRANSFERED FROM THE CUSTODY OF THE COMPETENT DIVISION OF R&D DEPARTMENT EXCEPT AS AUTHORIZED BY COMPAL ELECTRONICS, INC. NEITHER THIS SHEET NOR THE INFORMATION IT CONTAINS MAY BE USED BY OR DISCLOSED TO ANY THIRD PARTY WITHOUT PRIOR WRITTEN CONSENT OF COMPAL ELECTRONICS, INC.

Compal Electronics, Inc.

Title: PIR List

Size: Custom | Document Number: KBKC0_KBYF0 | Rev: 0.3

Date: Tuesday, February 03, 2009 | Sheet 45 of 46

NO	DATE	PAGE	MODIFICATION LIST	PURPOSE
	12/17	p.12	L3,L4 change from bead to 0 Ohm	
	12/17	P.17	Add R858~R865 for VGA HDMI	
	12/17	P.18	R374,R375,R376 change from 0 ohm to 10 ohm	
	12/17	P.20	R50 ,R53 change from JV70@ to @	
	12/17	P.20	R51 ,R52 change from JM70@ to JV70@	
	12/17	P.24	JP18 change from ESATA to USB port	
	12/17	P.25	R396 change from 10K to 0 Ohm	
	12/17	P.31	C905~C907 change from 0.1u to 33P	
	12/17	P.31	U19 change from mount to @ ; U18 change from @ to mount	
	12/17	P.32	D22 change from mount to @	
	12/18	P.24	SATA re-driver IC reserved	
	12/22	P.8	Add c124,c128,c151,c155,c55,c119,c113,c197 0.1uF	EMI request
	12/22	P.30	Add c40 c41 100P	EMI request
	12/22	P.30	Add c42,c43,c45	EMI request
	12/22	P.37~p.45	upgrade PWR schematic	
	12/22	P.30	Add C65 22uF for CRT flicker	
	12/23	P.21	Delete R174,R175	
	01/16	P.16	Add r611,r612 connect to INVT_PWM	Vari-Bright reserved
	01/16	P.11	Add r347 connect to BKOFF#	Vari-Bright reserved
	01/16	P.30	add r288 BKOFF# 4.7k pull low	

Security Classification	Compal Secret Data		
Issued Date	2008/11/03	Deciphered Date	2009/11/03

THIS SHEET OF ENGINEERING DRAWING IS THE PROPRIETARY PROPERTY OF COMPAL ELECTRONICS, INC. AND CONTAINS CONFIDENTIAL AND TRADE SECRET INFORMATION. THIS SHEET MAY NOT BE TRANSFERED FROM THE CUSTODY OF THE COMPETENT DIVISION OF R&D DEPARTMENT EXCEPT AS AUTHORIZED BY COMPAL ELECTRONICS, INC. NEITHER THIS SHEET NOR THE INFORMATION IT CONTAINS MAY BE USED BY OR DISCLOSED TO ANY THIRD PARTY WITHOUT PRIOR WRITTEN CONSENT OF COMPAL ELECTRONICS, INC.

Compal Electronics, Inc.

Title: **HW PIR**

Size | Document Number: **KBYF0 LA-5051P** | Rev 0.3

Date: Tuesday, February 03, 2009 | Sheet 46 of 46