Lindbergh/Baekland Schematic

uFCPGA Northwood

2003-01-07

Rev:X04

Compal Electronics, Inc.		
Title: Cover Sheet		
Size	Document Number: ADQ00/LA-1351	Rev: X04
Date: Wednesday, January 08, 2003	Sheet 1 of 52	

Compal confidential

Block Diagram

ADQ00(Lindbergh) ↔ Inspiron
ADQ10(Baekland) ↔ Precision

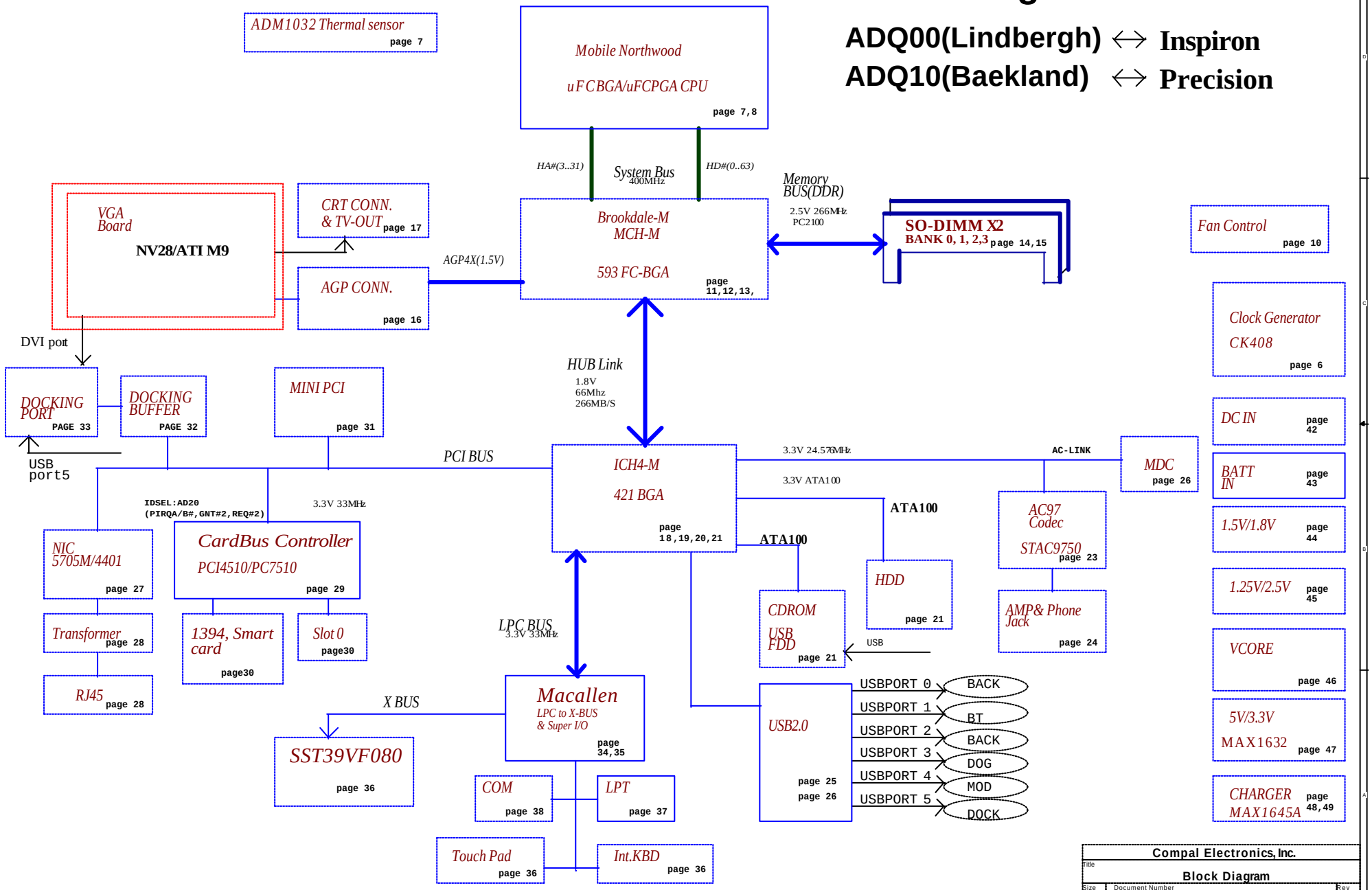

Compal Electronics, Inc.		
Title: Block Diagram		
Size	Document Number: ADQ00/LA-1351	Rev: X04
Date: Wednesday, January 08, 2003	Sheet 2 of 52	

PM TABLE

power plane / State	+3VALW +5VALW	+3VSRC +3VSUS +5VSUS +2.5VSUS +1.8VSUS +1.5VSUS +12V	+3VRUN +5VRUN +1.8VRUN +1.5VRUN +VCC_CORE
S0	ON	ON	ON
S1	ON	ON	ON
S3	ON	ON	OFF
S5 S4/AC	ON	OFF	OFF
S5 S4/AC don't exist	OFF	OFF	OFF

PCI TABLE

PCI DEVICE	IDSEL	REQ#/GNT#
CARD BUS	AD17	1
LAN	AD16	4
DOCK	AD24	0
MINI PCI	AD19	3

USB TABLE

USB PORT#	DESTINATION
0	BACK
1	BLUETOOTH
2	BACK
3	DOG
4	MOD
5	DOCK

BOM Structure:

Baekland- 43122231001, with 1@

Lindbergh- 43122231002, with 2@

Configuration List

BOM Structure		
Function	Lindbergh	Kapalua \ Baekland

Note: "@" means all model depop

"?" means Kapalua pop only (ie Lendbergh depop)

"#" means Lindbergh pop only (ie baekland depop)

Compal Electronics, Inc.		
Title: Index and Config.		
Size	Document Number: ADQ00/LA-1351	Rev: X04
Date: Wednesday, January 08, 2003	Sheet 3 of 52	

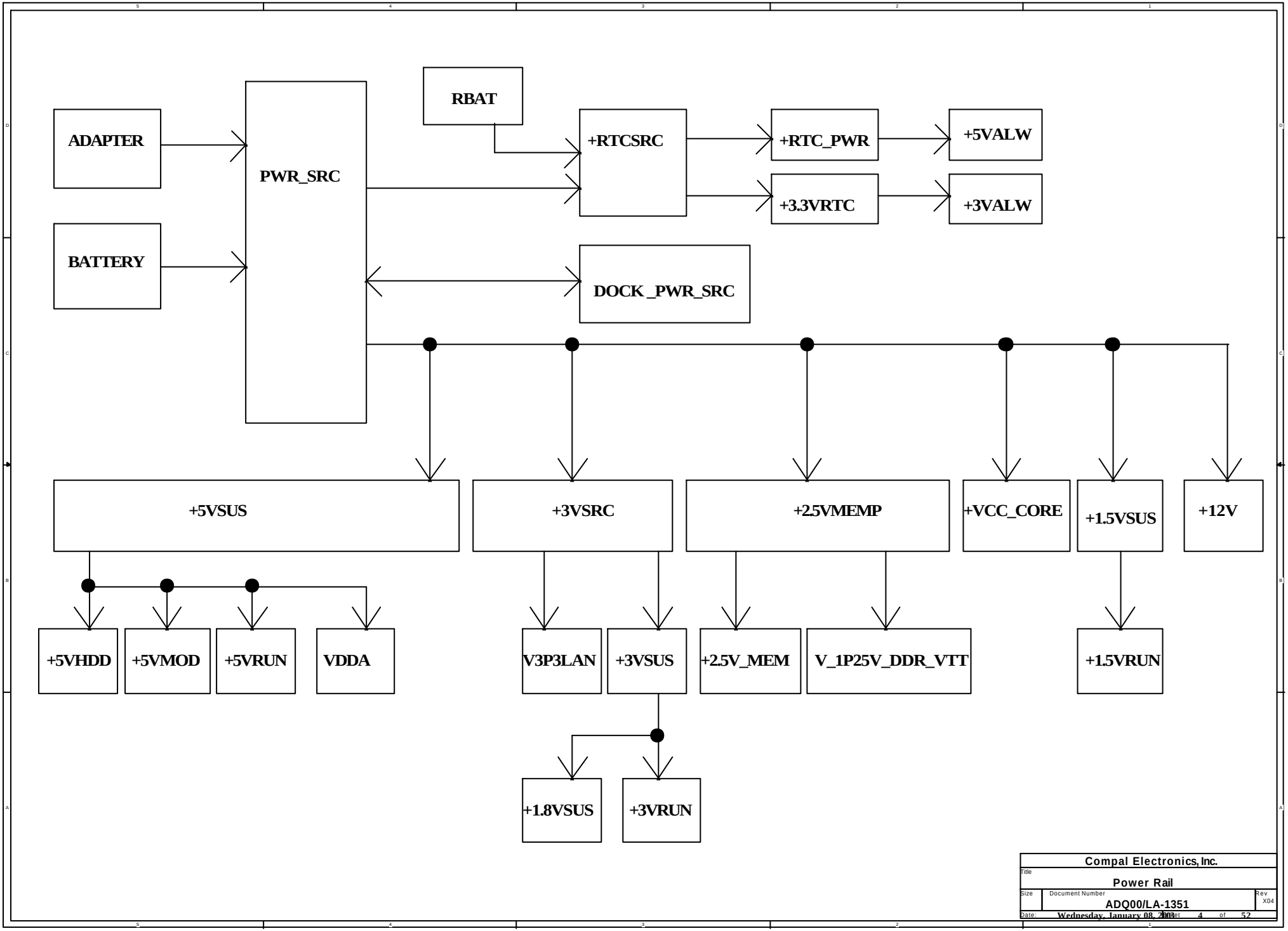

Compal Electronics, Inc.		
Title: Power Rail		
Size	Document Number: ADQ00/LA-1351	Rev: X04
Date: Wednesday, January 08, 2003	Sheet 4 of 52	

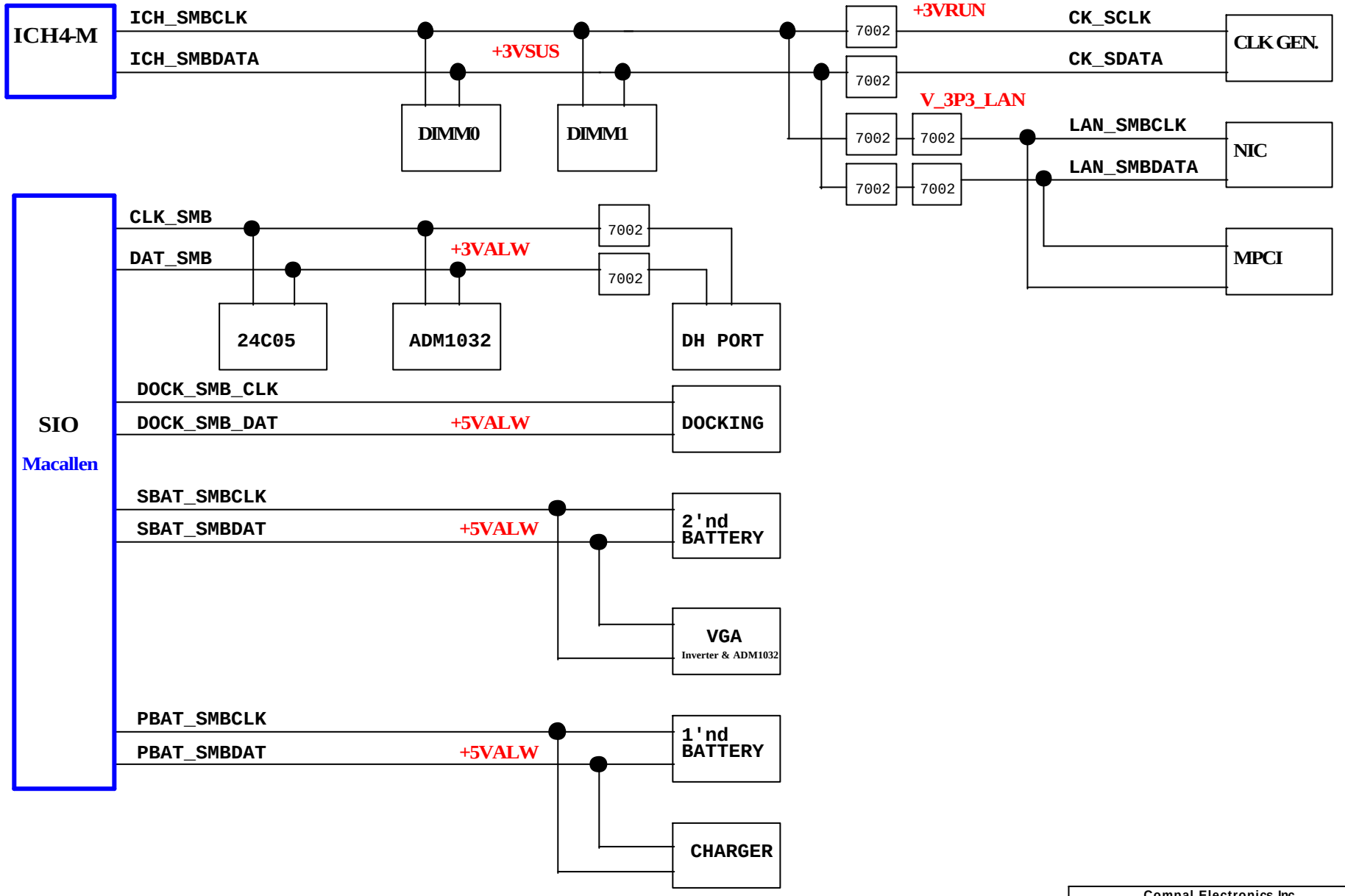

Compal Electronics, Inc.		
Title: SMBUS TOPOLOGY		
Size	Document Number: ADQ00/LA-1351	Rev: X04
Date: Wednesday, January 08, 2003	Sheet 5 of 52	

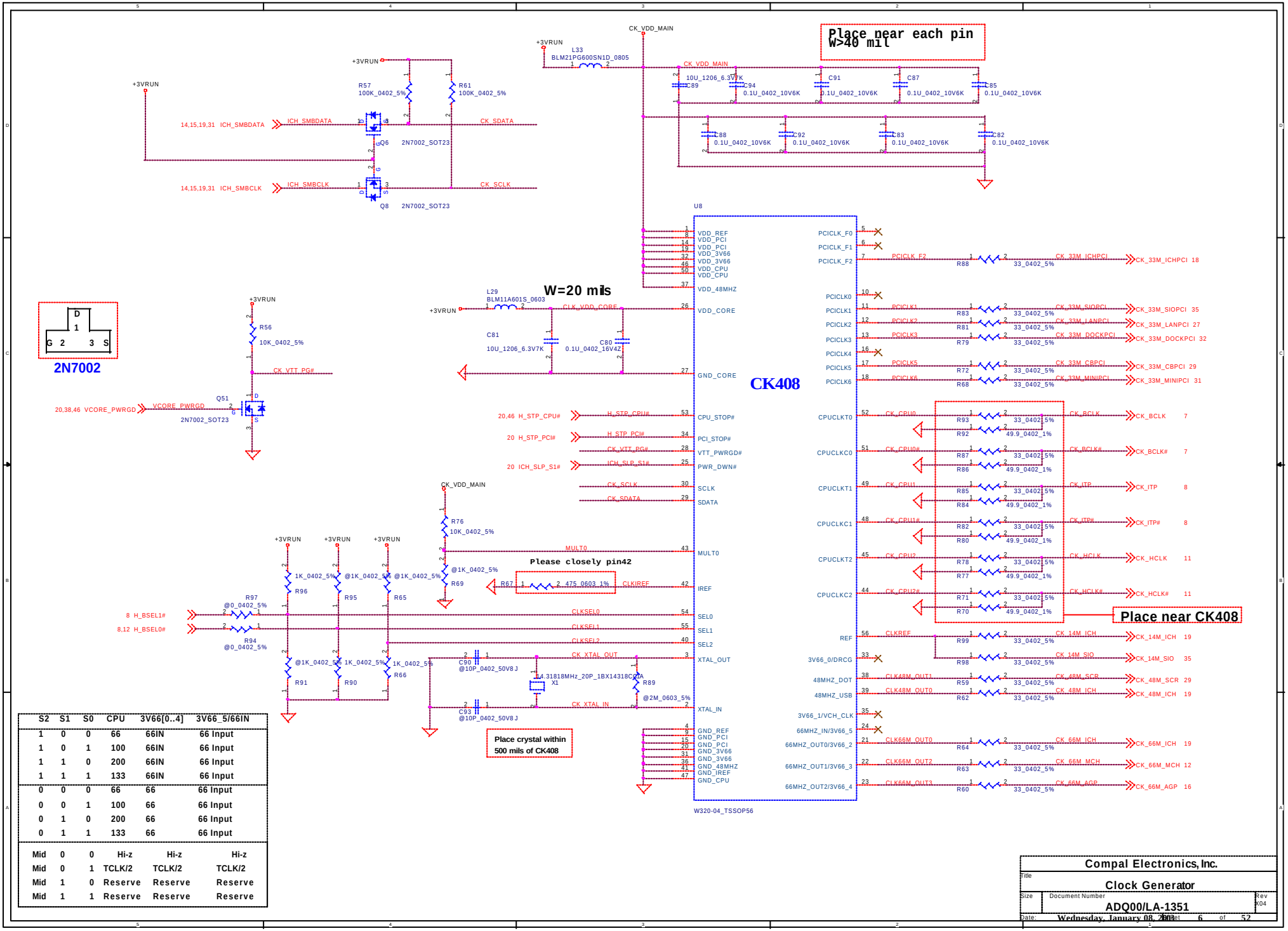

S2	S1	S0	CPU	3V66[0..4]	3V66_5/66IN
1	0	0	66	66IN	66 Input
1	0	1	100	66IN	66 Input
1	1	0	200	66IN	66 Input
1	1	1	133	66IN	66 Input
0	0	0	66	66	66 Input
0	0	1	100	66	66 Input
0	1	0	200	66	66 Input
0	1	1	133	66	66 Input
Mid	0	0	Hi-z	Hi-z	Hi-z
Mid	0	1	TCLK/2	TCLK/2	TCLK/2
Mid	1	0	Reserve	Reserve	Reserve
Mid	1	1	Reserve	Reserve	Reserve

Compal Electronics, Inc.

Title: Clock Generator

Size | Document Number: ADQ00/LA-1351 | Rev: X04

Date: Wednesday, January 08, 2003 | Sheet 6 of 52

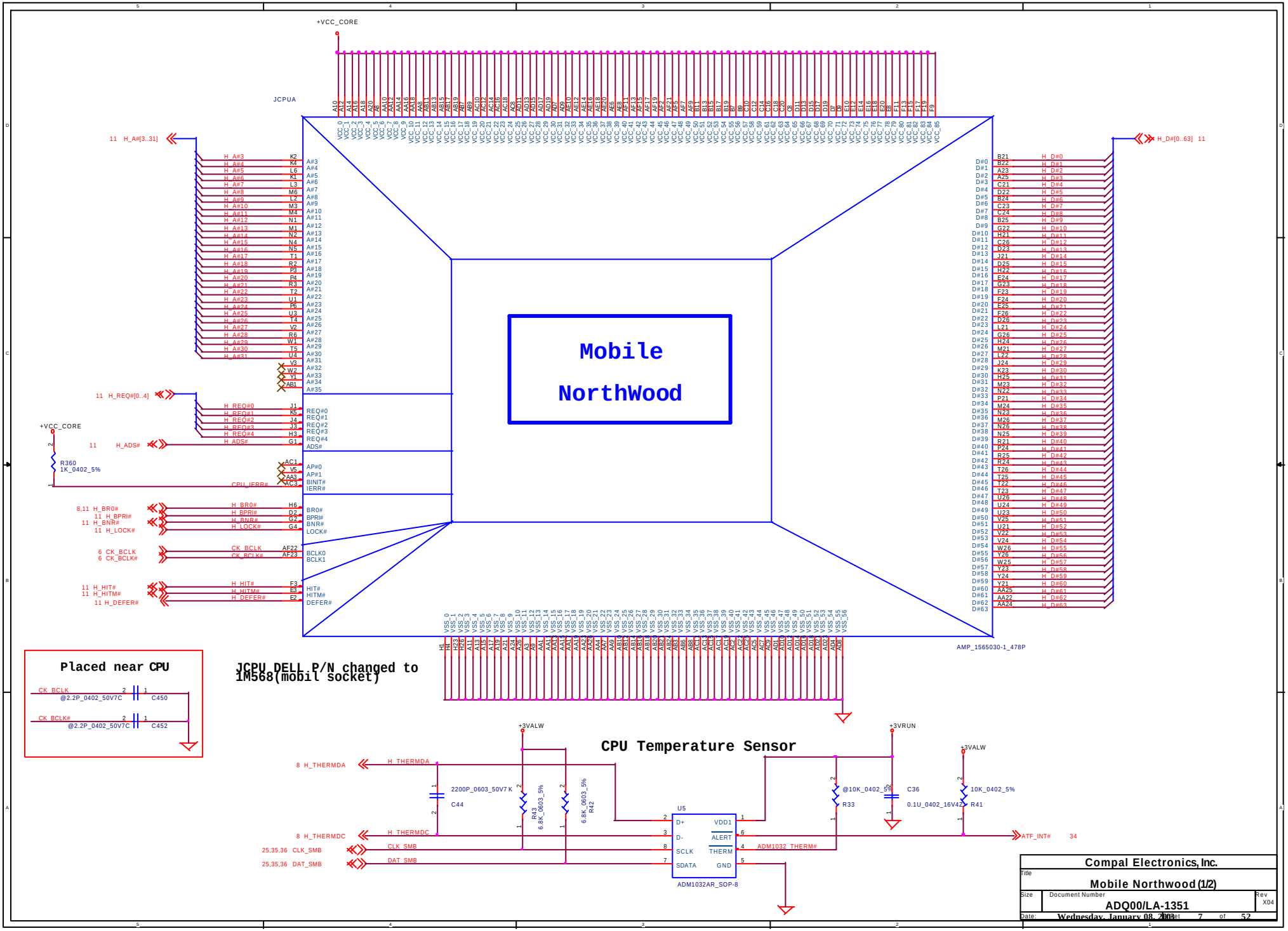
+VCC_CORE
JCPUA
Mobile
NorthWood
AMP_1565030-1_478P
Placed near CPU
CK_BCLK
@2.2P_0402_50V7C
C450
CK_BCLK#
C452
JCPU DELL P/N changed to
1M568(mobil socket)
CPU Temperature Sensor
+3VALW
+3VRUN
H_THERMDA
H_THERMDC
CLK_SMB
DAT_SMB
ADM1032_THERM#
ATF_INT#
U5
ADM1032AR_SOP-8
2200P_0603_50V7 K
C44
6.8K_0603_5%
R43
R42
@10K_0402_5%
R33
C36
0.1U_0402_16V4Z
10K_0402_5%
R41
R360
1K_0402_5%
Compal Electronics, Inc.
Mobile Northwood (1/2)
ADQ00/LA-1351
Wednesday, January 08, 2003
Sheet 7 of 52

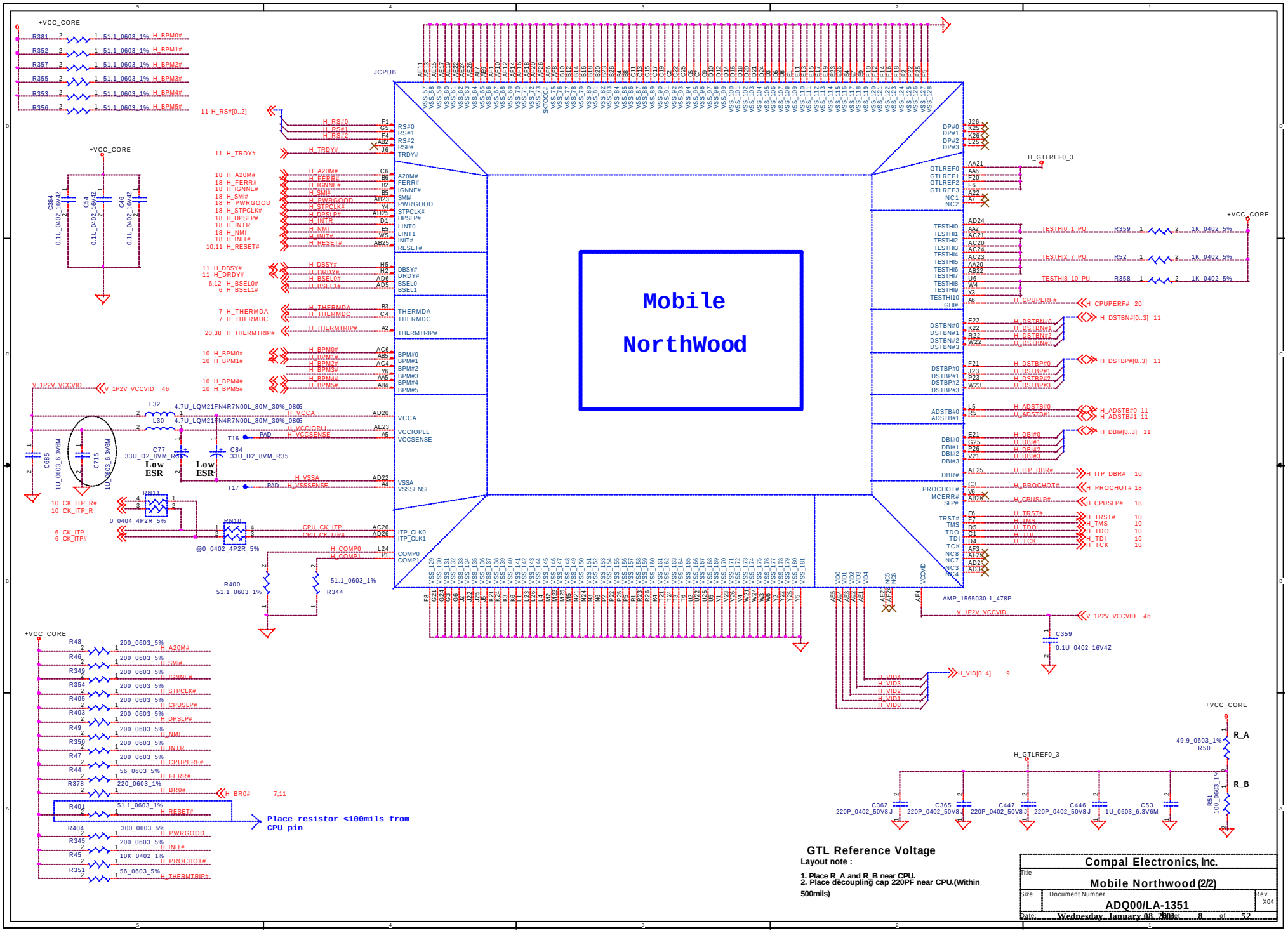

GTL Reference Voltage

Layout note :

1. Place R_A and R_B near CPU.
2. Place decoupling cap 220PF near CPU.(Within 500mils)

Compal Electronics, Inc.		
Title: Mobile Northwood (2/2)		
Size	Document Number: ADQ00/LA-1351	Rev: X04
Date: Wednesday, January 08, 2003	Sheet 8 of 52	

Layout note :

Place close to CPU, Use 2~3 vias per PAD.
Place .22uF caps underneath balls on solder side.
Place 10uF caps on the peripheral near balls.
Use 2~3 vias per PAD.

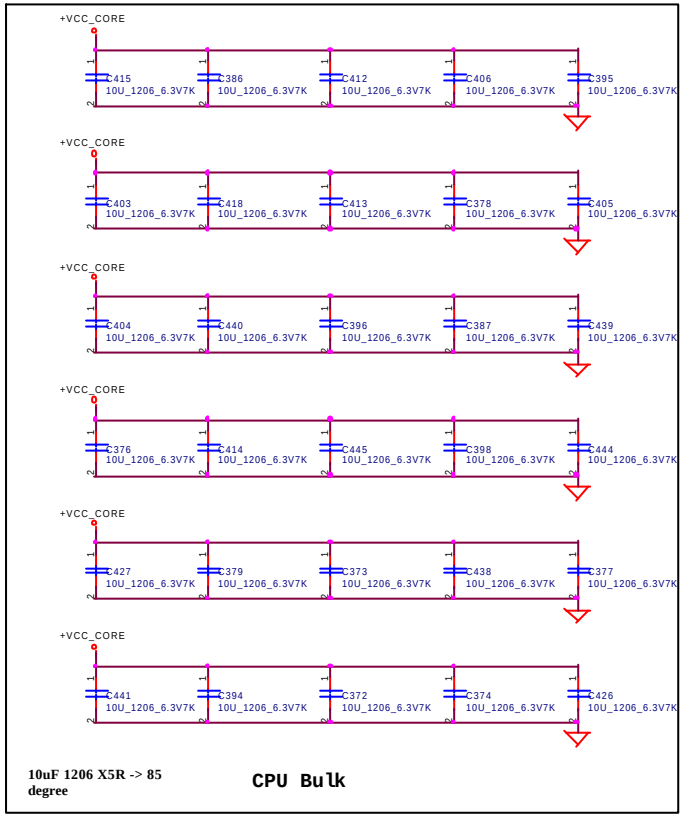

10uF 1206 X5R -> 85 degree

CPU Bulk

Layout note :

Place close to CPU power and ground pin as possible (<1inch)

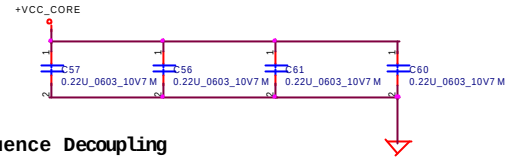

High Frequence Decoupling

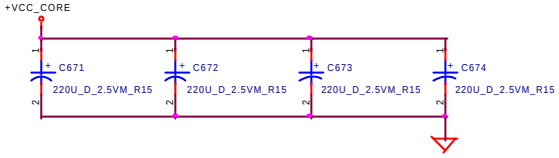

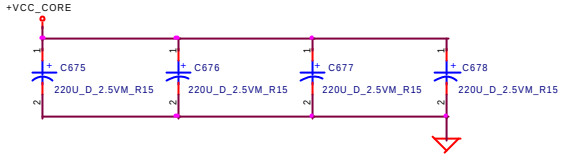

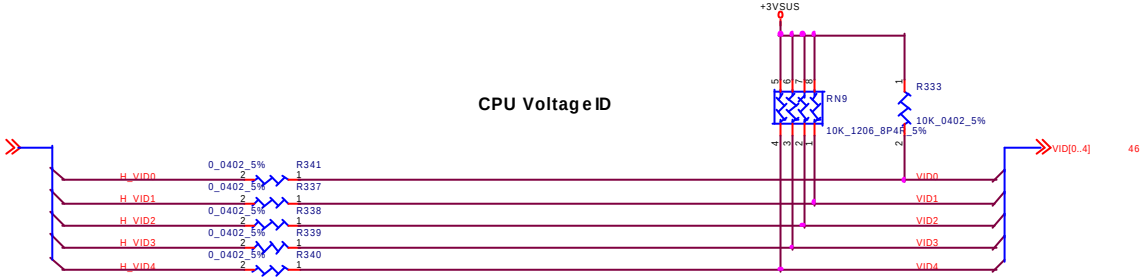

CPU Voltage ID

V I D					Vcore
VID4	VID3	VID2	VID1	VID0	V
0	1	0	0	0	1.350
0	1	0	0	1	1.300
0	1	0	1	0	1.250
0	1	0	1	1	1.200
0	1	1	0	0	1.150
0	1	1	0	1	1.100
0	1	1	1	0	1.050
0	1	1	1	1	1.000
1	0	0	0	0	0.975
1	0	0	0	1	0.950

Compal Electronics, Inc.		
Title: CPU bypass and CPU VID		
Size	Document Number: ADQ00/LA-1351	Rev: X04
Date: Wednesday, January 08, 2003	Sheet 9 of 52	

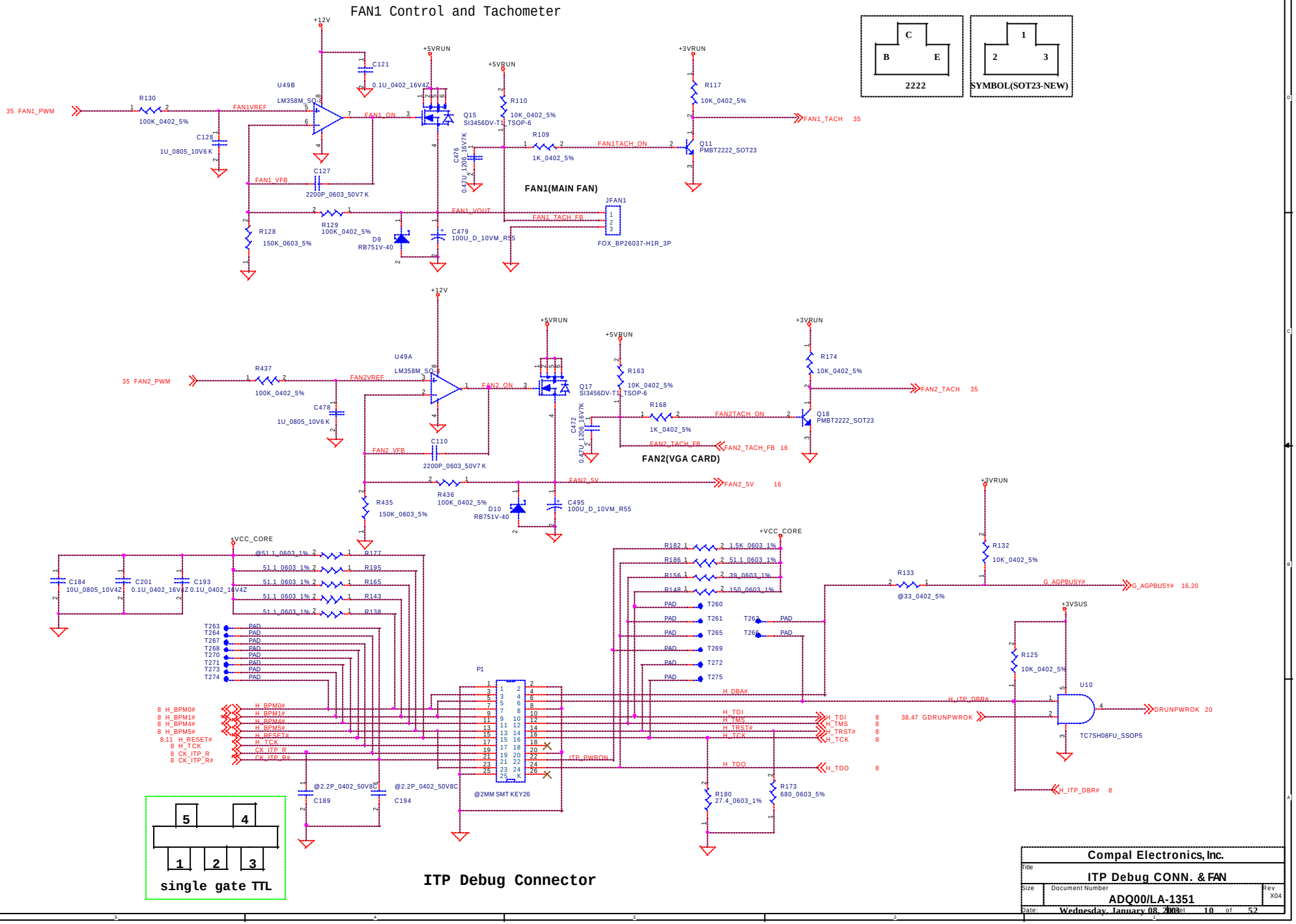
FAN1 Control and Tachometer
FAN1(MAIN FAN)
FAN2(VGA CARD)
ITP Debug Connector
single gate TTL
SYMBOL(SOT23-NEW)
2222
Compal Electronics, Inc.
ITP Debug CONN. & FAN
ADQ00/LA-1351
Wednesday, January 08, 2003
Sheet 10 of 52

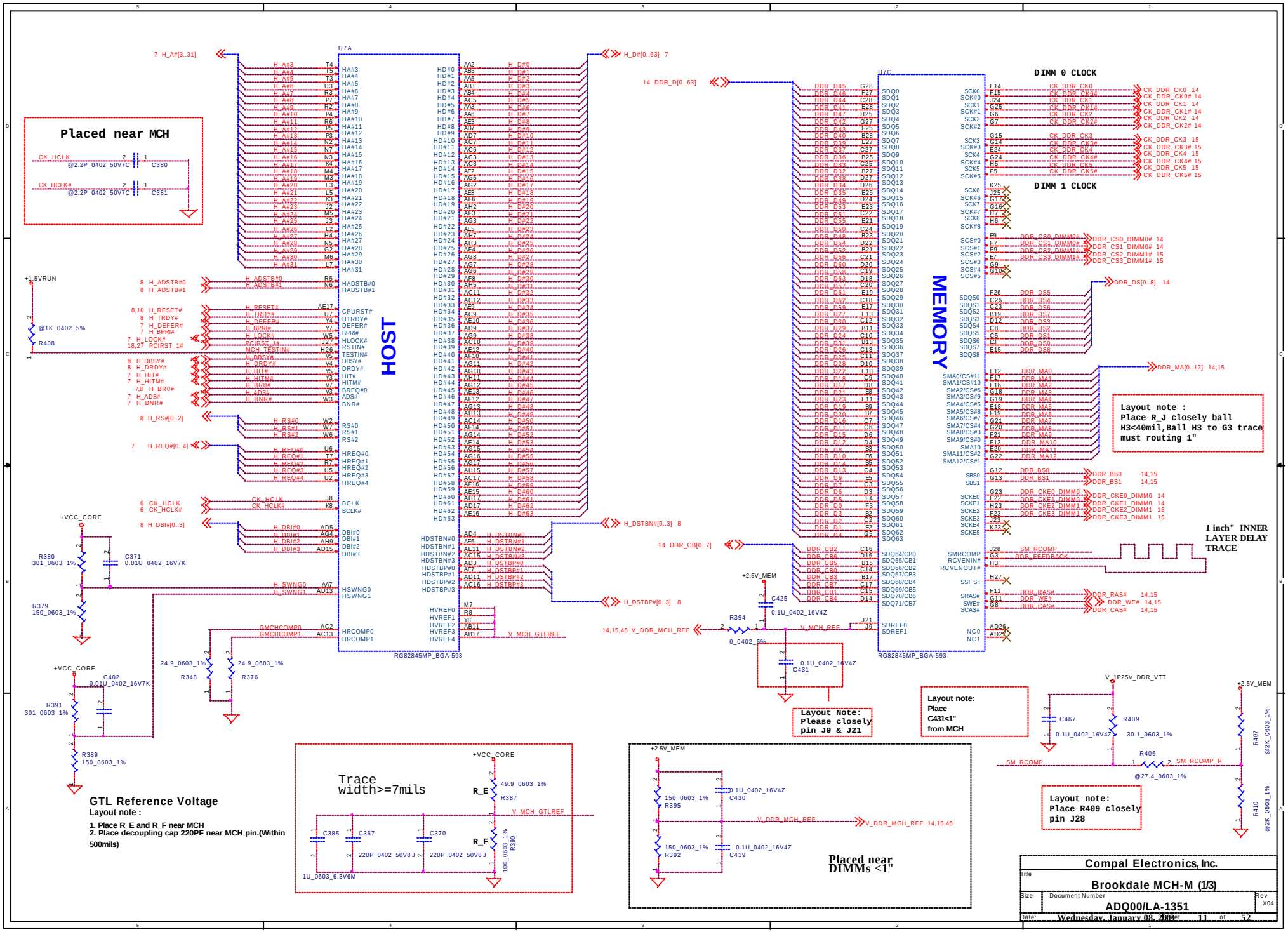
Placed near MCH
CK_HCLK
CK_HCLK#
C380
C381
@2.2P_0402_50V7C
U7A
HOST
RG82845MP_BGA-593
U7C
MEMORY
RG82845MP_BGA-593
DIMM 0 CLOCK
DIMM 1 CLOCK
Layout note :
Place R_J closely ball H3<40mil,Ball H3 to G3 trace must routing 1"
1 inch" INNER LAYER DELAY TRACE
Layout Note:
Please closely pin J9 & J21
Layout note:
Place C431<1" from MCH
Layout note:
Place R409 closely pin J28
GTL Reference Voltage
Layout note :
1. Place R_E and R_F near MCH
2. Place decoupling cap 220PF near MCH pin.(Within 500mils)
Trace width>=7mils
Placed near DIMMs <1"
Compal Electronics, Inc.
Brookdale MCH-M (1/3)
ADQ00/LA-1351
Wednesday, January 08, 2003
11 of 52

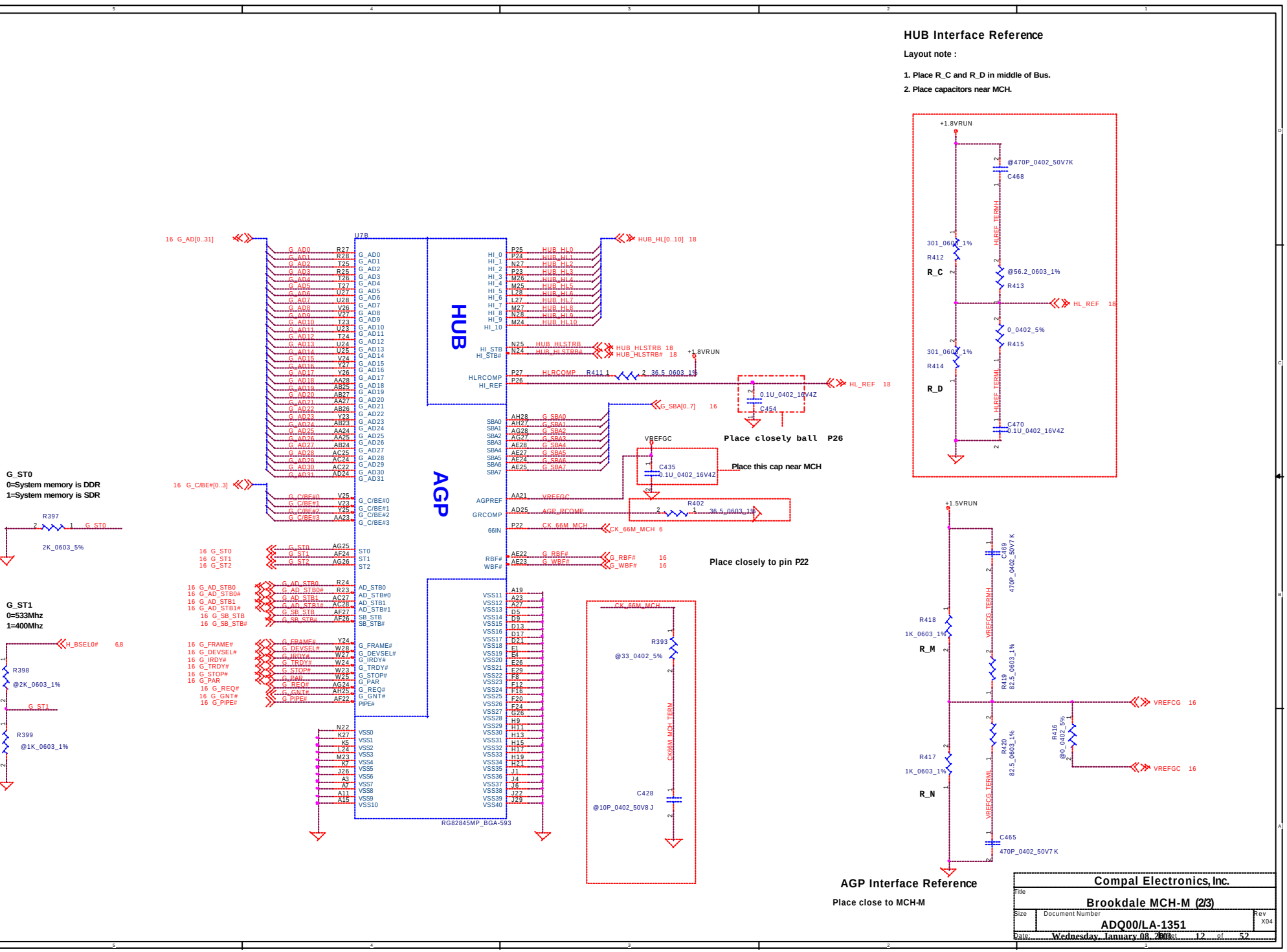
HUB Interface Reference
Layout note :
1. Place R_C and R_D in middle of Bus.
2. Place capacitors near MCH.
HUB
AGP
U7B
RG82845MP_BGA-593
G_ST0
0=System memory is DDR
1=System memory is SDR
G_ST1
0=533Mhz
1=400Mhz
Place closely ball P26
Place this cap near MCH
Place closely to pin P22
AGP Interface Reference
Place close to MCH-M
Compal Electronics, Inc.
Brookdale MCH-M (2/3)
ADQ00/LA-1351
Wednesday, January 08, 2003
Sheet 12 of 52

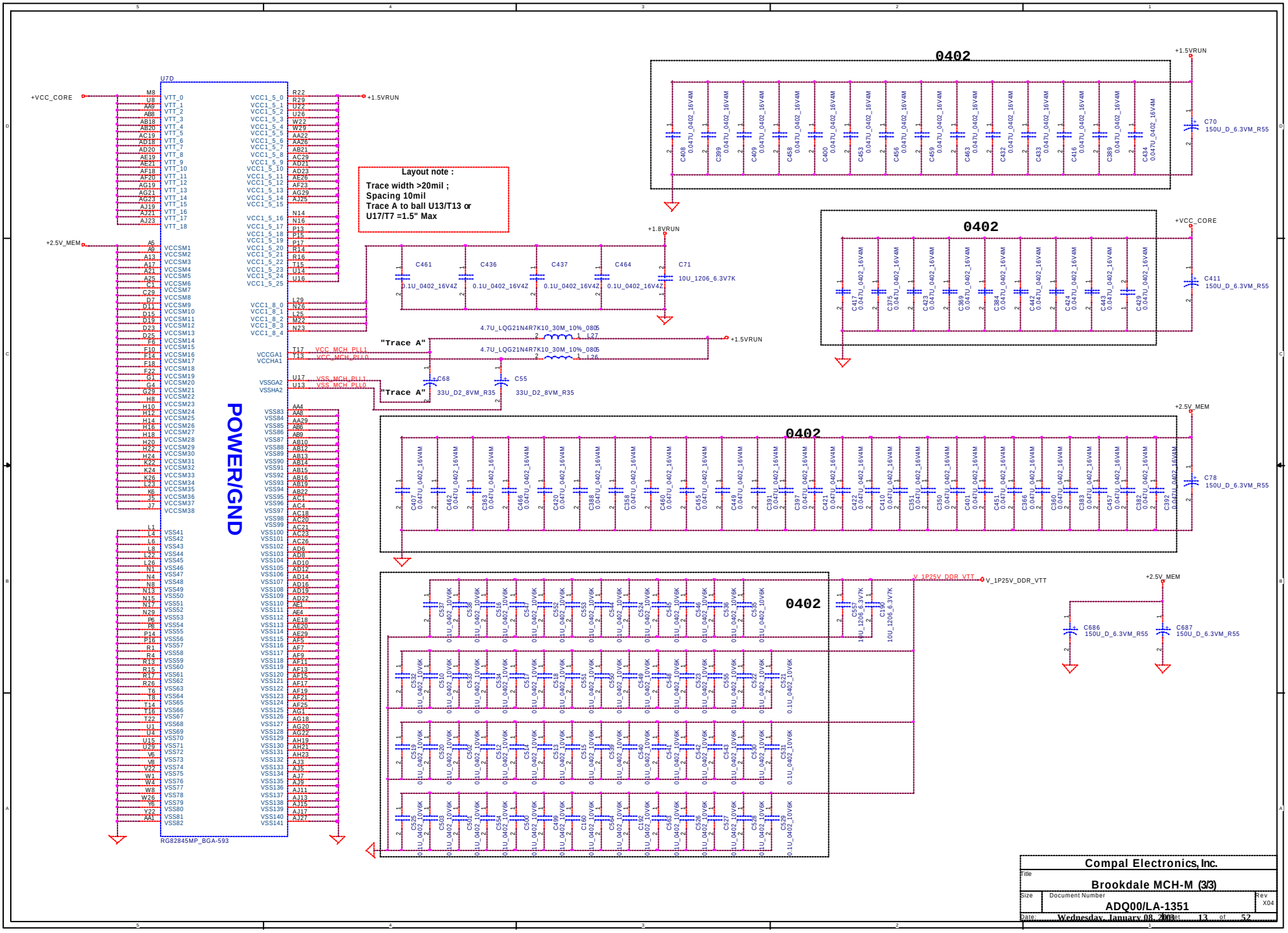
POWER/GND
U7D
RG82845MP_BGA-593
+VCC_CORE
+2.5V_MEM
+1.5VRUN
+1.8VRUN
+2.5V_MEM
+VCC_CORE
+1.5VRUN
+2.5V_MEM
+2.5V_MEM
V_1P25V_DDR_VTT
V_1P25V_DDR_VTT
Layout note :
Trace width >20mil ;
Spacing 10mil
Trace A to ball U13/T13 or
U17/T7 =1.5" Max
"Trace A"
"Trace A"
0402
0402
0402
0402
0402
C70 150U_D_6.3VM_R55
C411 150U_D_6.3VM_R55
C78 150U_D_6.3VM_R55
C686 150U_D_6.3VM_R55
C687 150U_D_6.3VM_R55
C461
C436
C437
C464
C71
10U_1206_6.3V7K
4.7U_LQG21N4R7K10_30M_10%_0805
C68
C55
33U_D2_8VM_R35
33U_D2_8VM_R35
Compal Electronics, Inc.
Brookdale MCH-M (3/3)
ADQ00/LA-1351
X04
Wednesday, January 08, 2003
13
52

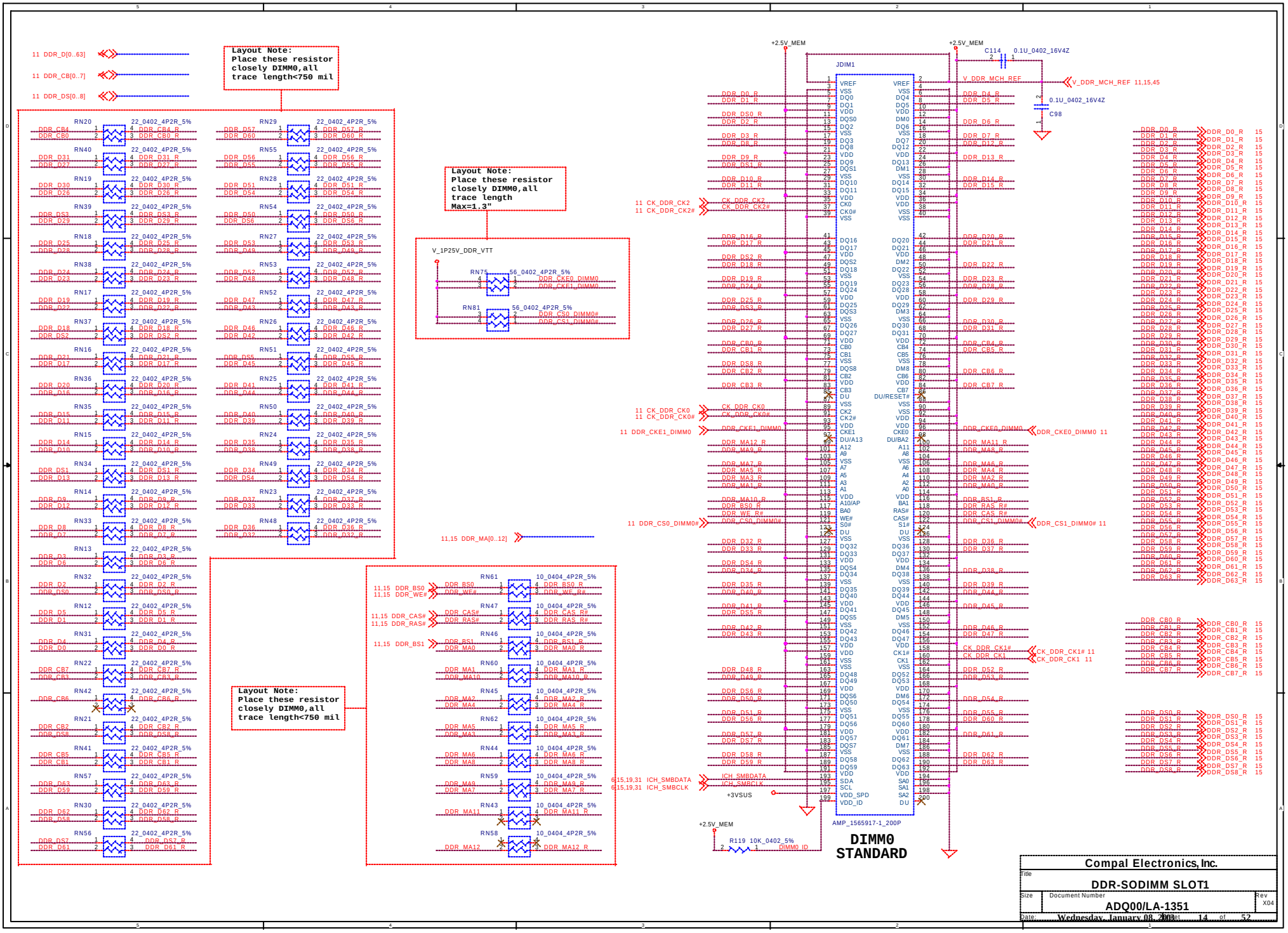
11 DDR_D[0..63]
11 DDR_CB[0..7]
11 DDR_DS[0..8]
Layout Note:
Place these resistor
closely DIMM0,all
trace length<750 mil
Layout Note:
Place these resistor
closely DIMM0,all
trace length
Max=1.3"
V_1P25V_DDR_VTT
Layout Note:
Place these resistor
closely DIMM0,all
trace length<750 mil
11,15 DDR_MA[0..12]
+2.5V_MEM
JDIM1
AMP_1565917-1_200P
DIMM0
STANDARD
C114 0.1U_0402_16V4Z
C98 0.1U_0402_16V4Z
V_DDR_MCH_REF 11,15,45
R119 10K_0402_5%
DIMM0_ID
+3VSUS
6,15,19,31 ICH_SMBDATA
6,15,19,31 ICH_SMBCLK
11 CK_DDR_CK2
11 CK_DDR_CK2#
11 CK_DDR_CK0
11 CK_DDR_CK0#
11 DDR_CKE1_DIMM0
11 DDR_CS0_DIMM0#
DDR_CKE0_DIMM0 11
DDR_CS1_DIMM0# 11
CK_DDR_CK1# 11
CK_DDR_CK1 11
Compal Electronics, Inc.
DDR-SODIMM SLOT1
ADQ00/LA-1351
Wednesday, January 08, 2003
14 of 52

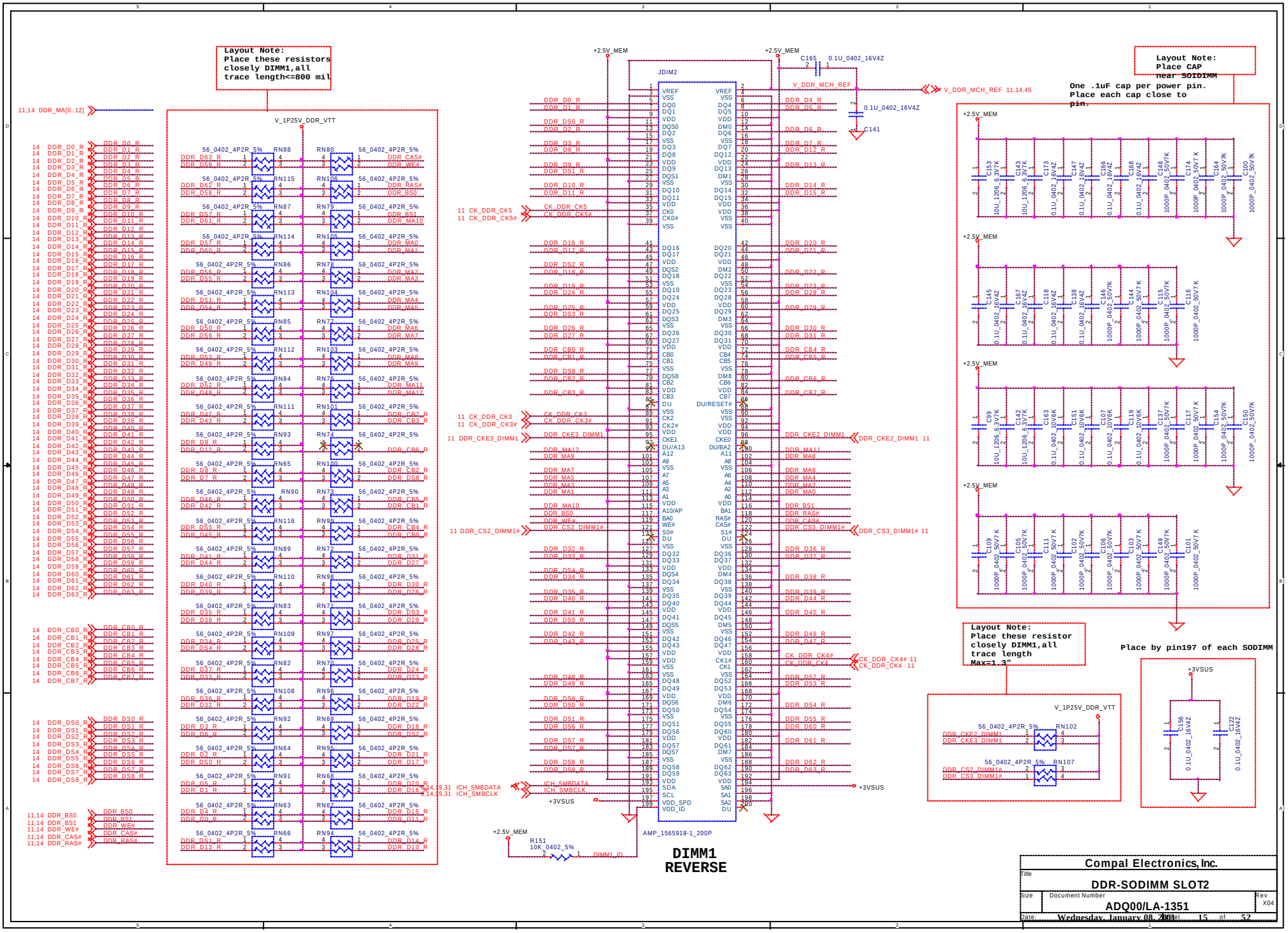
Layout Note:
Place these resistors
closely DIMM1,all
trace length<=800 mil
V_1P25V_DDR_VTT
11,14 DDR_MA[0..12]
JDIM2
AMP_1565918-1_200P
DIMM1
REVERSE
+2.5V_MEM
+3VSUS
V_DDR_MCH_REF
V_DDR_MCH_REF 11,14,45
Layout Note:
Place CAP
near SODIMM
One .1uF cap per power pin.
Place each cap close to
pin.
Layout Note:
Place these resistor
closely DIMM1,all
trace length
Max=1.3"
Place by pin197 of each SODIMM
R151
10K_0402_5%
DIMM1_ID
ICH_SMBDATA
ICH_SMBCLK
11 CK_DDR_CK5
11 CK_DDR_CK3
11 DDR_CKE3_DIMM1
11 DDR_CS2_DIMM1#
DDR_CKE2_DIMM1 11
DDR_CS3_DIMM1# 11
CK_DDR_CK4# 11
CK_DDR_CK4 11
Compal Electronics, Inc.
DDR-SODIMM SLOT2
ADQ00/LA-1351
X04
Wednesday, January 08, 2003
15 of 52

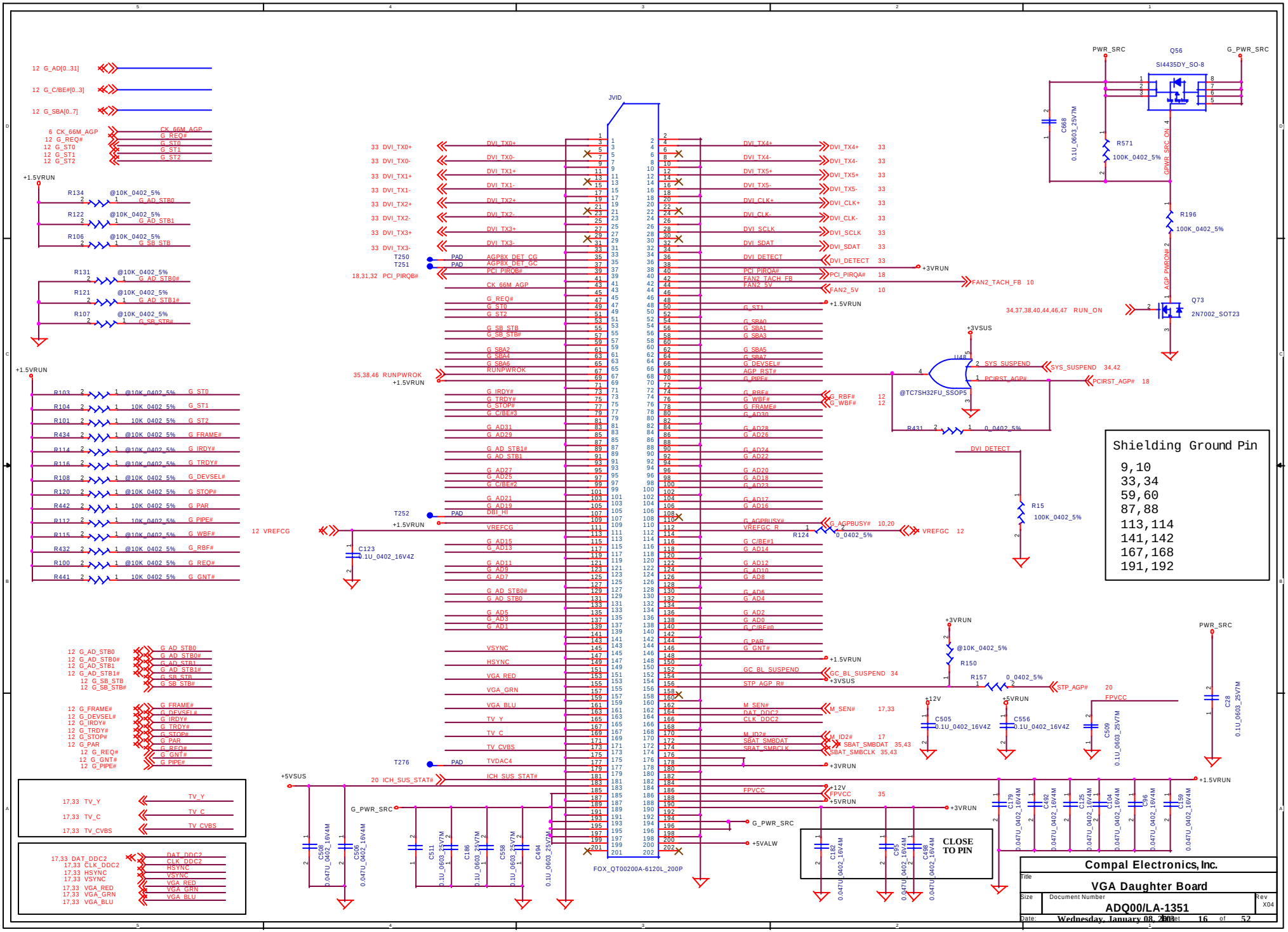

Title	VGA Daughter Board
Company	Compal Electronics, Inc.
Size	
Document Number	ADQ00/LA-1351
Rev	X04
Date:	Wednesday, January 08, 2003
Sheet	16 of 52

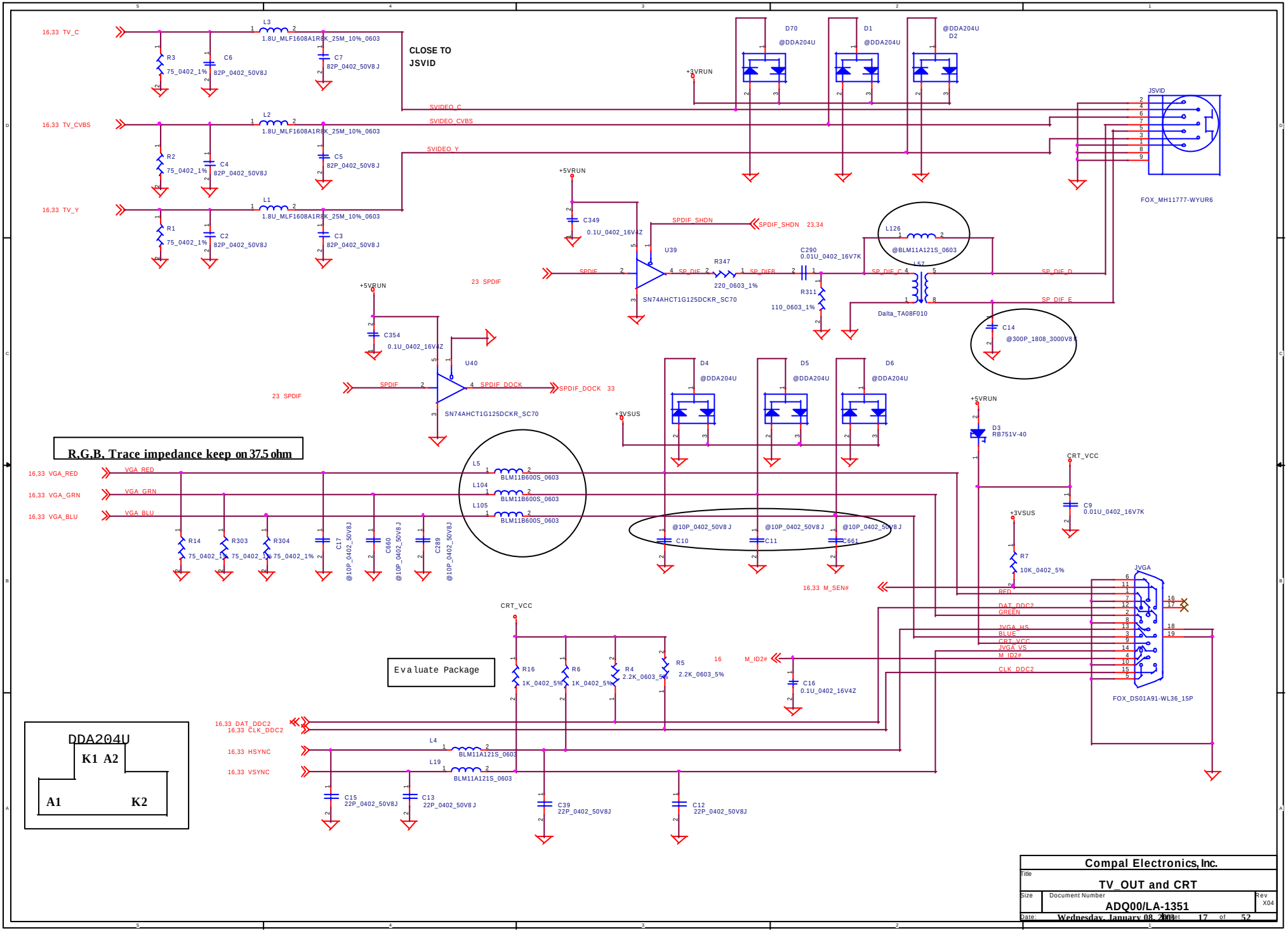

Compal Electronics, Inc.		
Title: TV_OUT and CRT		
Size	Document Number: ADQ00/LA-1351	Rev: X04
Date: Wednesday, January 08, 2003	Sheet 17 of 52	

Hub interface Layout:

Route signal with 5/15
trace/space,<< 8 inchs

Signal must match +/- 0.1" of HL_STB/STB# signals.

ICH4

U59A

FW82801DBM_BGA-421(ICH4)

PCI INTERFACE

CPU INTERFACE

HUB LINK

INTERRUPT INTERFACE

Level shifter

Place near ICH

Compal Electronics, Inc.	
Title	ICH4(1/4)
Size	Document Number: ADQ00/LA-1351
Rev	X04
Date:	Wednesday, January 08, 2003
Sheet	18 of 52

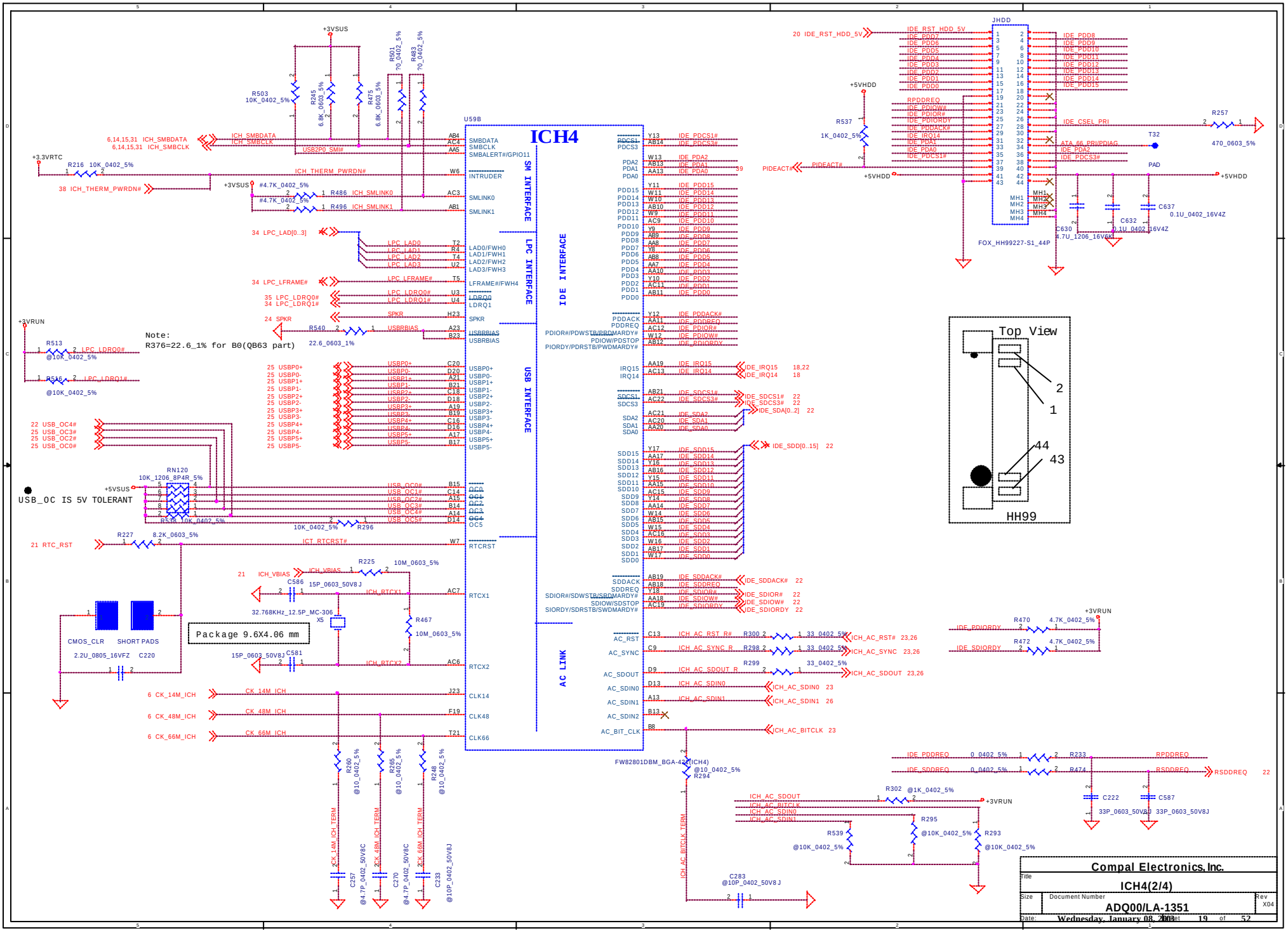
ICH4
SM INTERFACE
LPC INTERFACE
IDE INTERFACE
USB INTERFACE
AC LINK
Note:
R376=22.6_1% for B0(QB63 part)
USB_OC IS 5V TOLERANT
Package 9.6X4.06 mm
CMOS_CLR
SHORT PADS
Top View
HH99
Compal Electronics, Inc.
ICH4(2/4)
ADQ00/LA-1351
Wednesday, January 08, 2003
Sheet 19 of 52

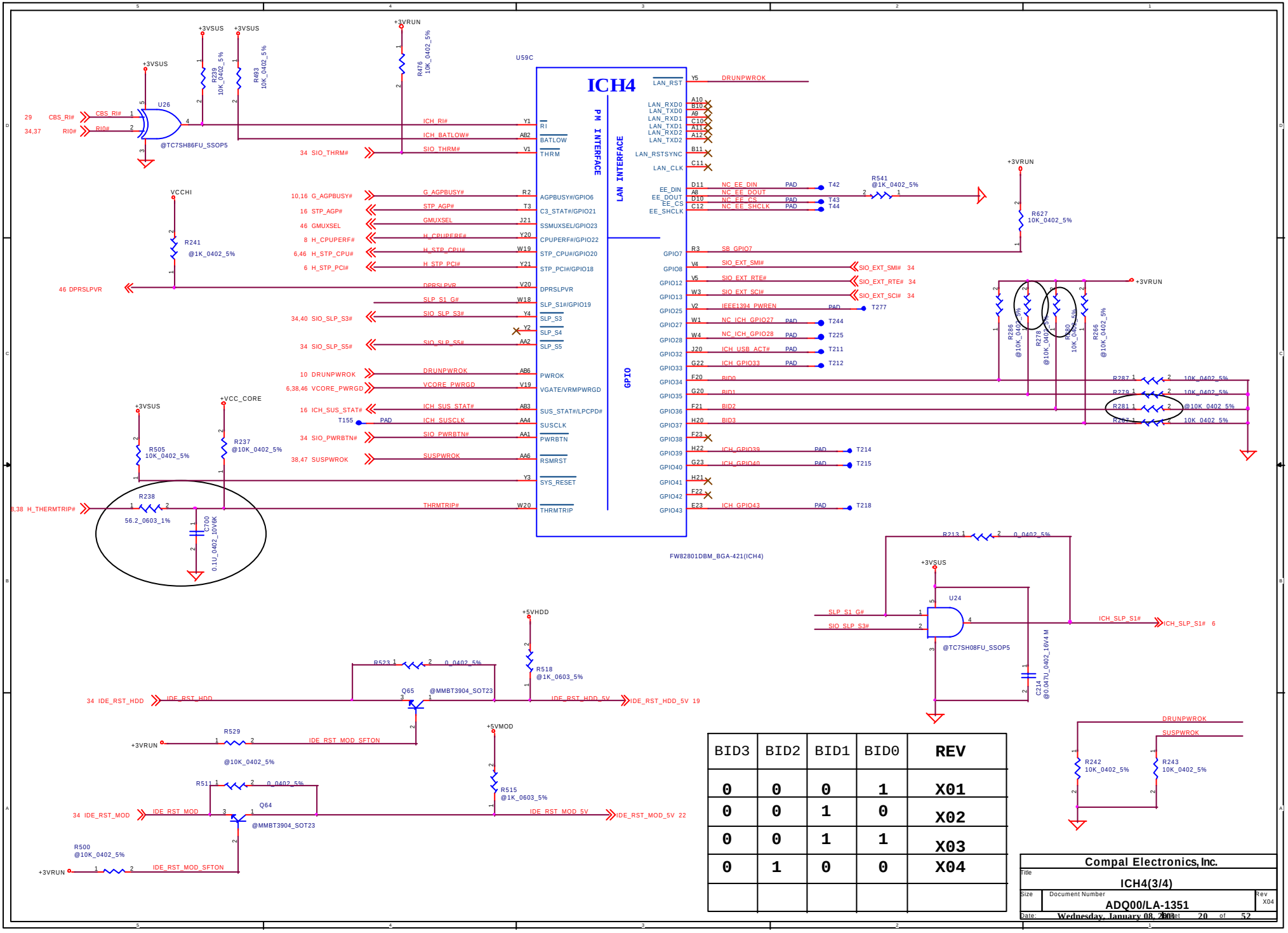

BID3	BID2	BID1	BID0	REV
0	0	0	1	X01
0	0	1	0	X02
0	0	1	1	X03
0	1	0	0	X04

Compal Electronics, Inc.		
Title: ICH4(3/4)		
Size	Document Number: ADQ00/LA-1351	Rev: X04
Date: Wednesday, January 08, 2003	Sheet 20 of 52	

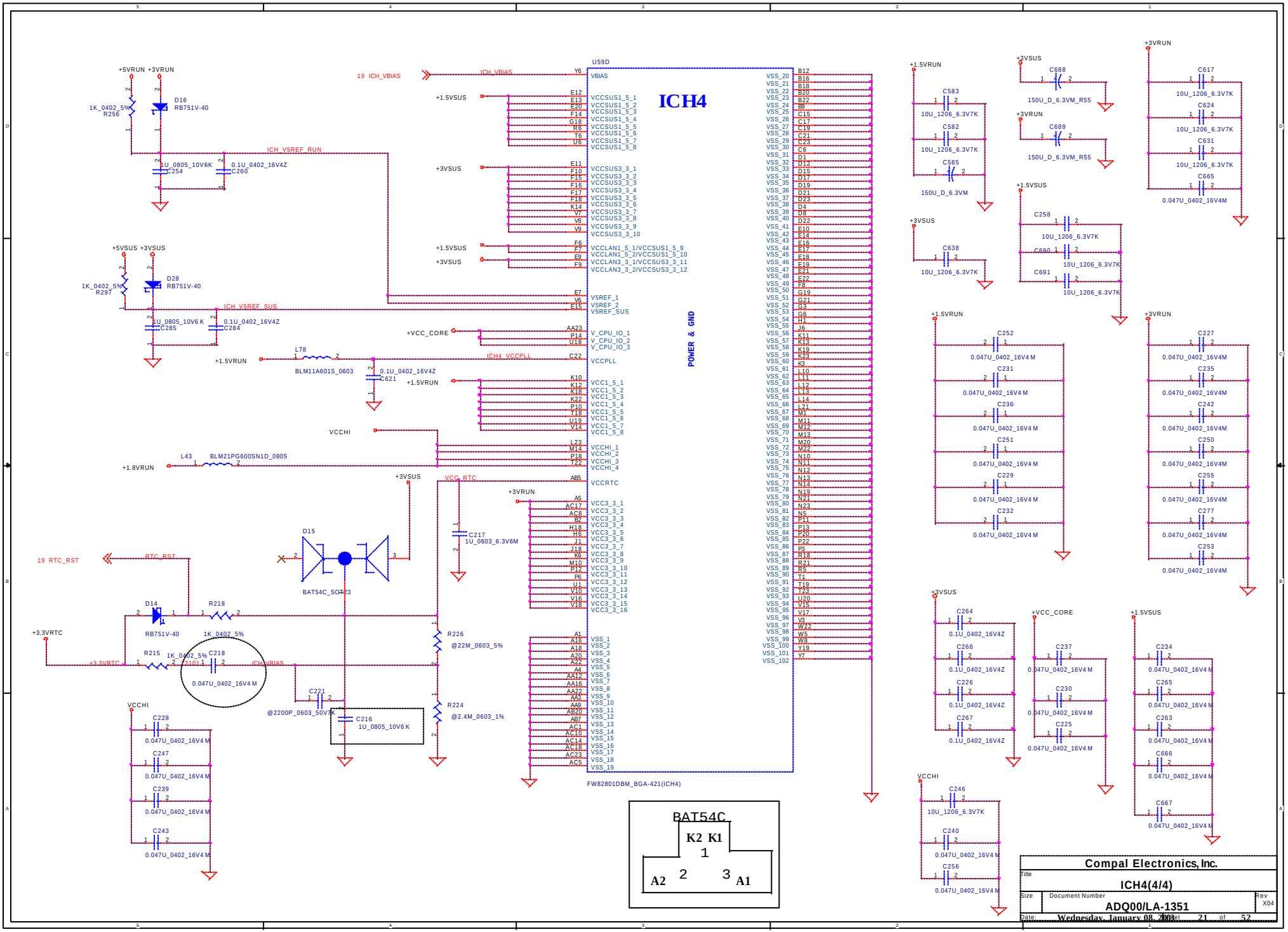
ICH4
U59D
POWER & GND
FW82801DBM_BGA-421(ICH4)
BAT54C
K2 K1
1
A2 2 3 A1
Compal Electronics, Inc.
Title
ICH4(4/4)
Size
Document Number
ADQ00/LA-1351
Rev
X04
Date: Wednesday, January 08, 2003
Sheet 21 of 52

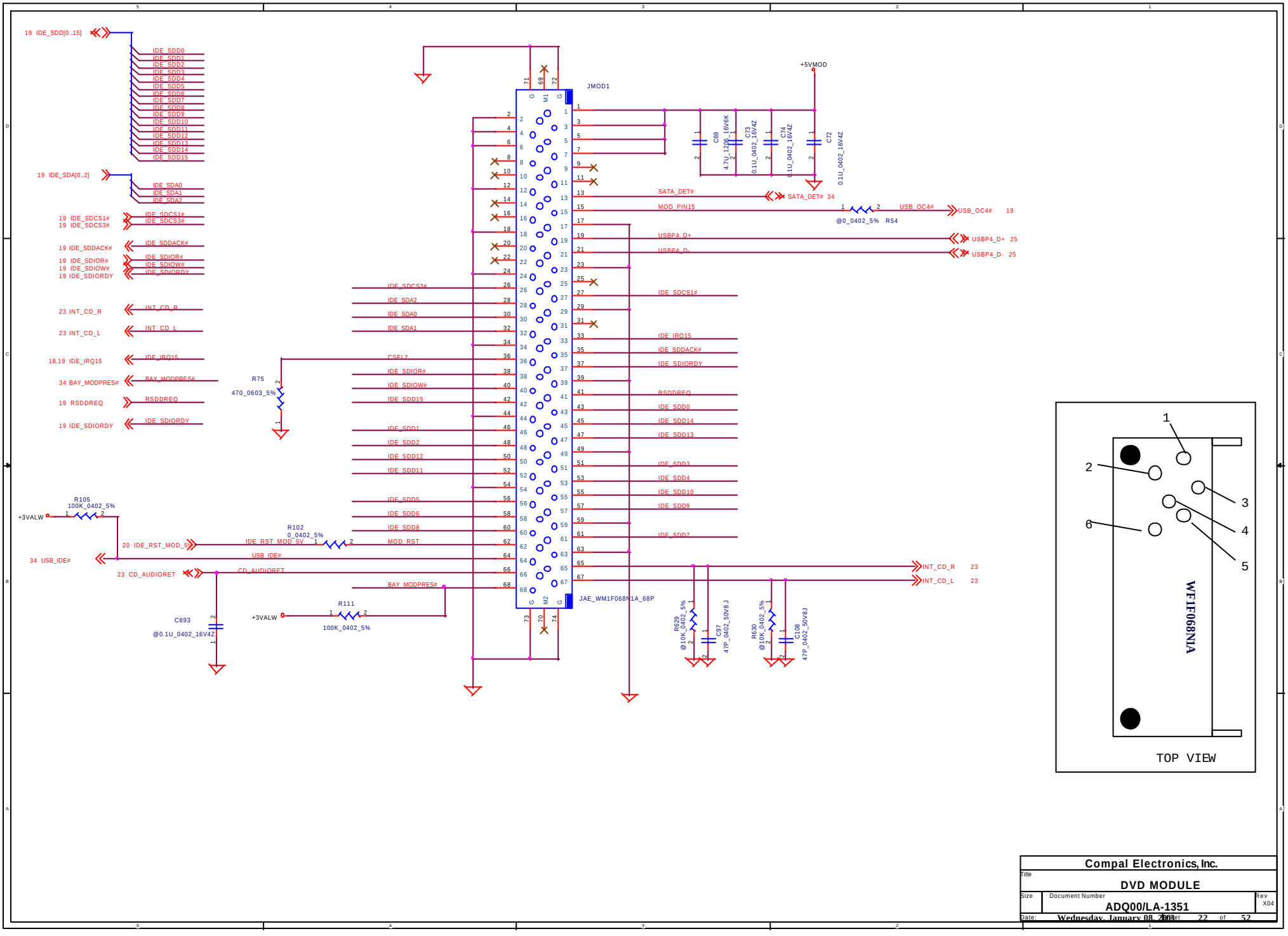

Compal Electronics, Inc.		
Title: DVD MODULE		
Size	Document Number: ADQ00/LA-1351	Rev: X04
Date: Wednesday, January 08, 2003	Sheet 22 of 52	

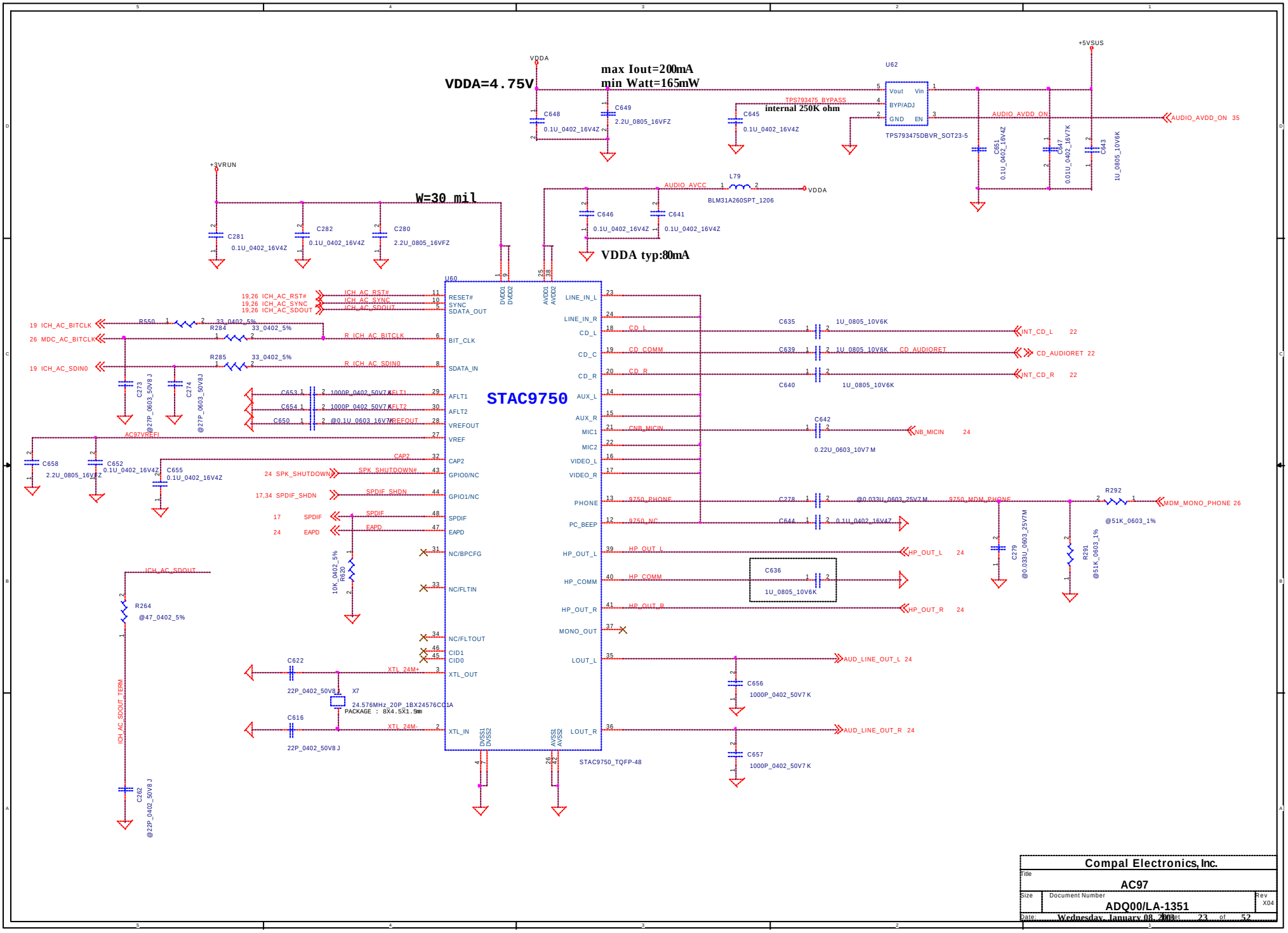
VDDA=4.75V
max Iout=200mA
min Watt=165mW
VDDA
+5VSUS
U62
TPS793475_BYPASS
internal 250K ohm
TPS793475DBVR_SOT23-5
AUDIO_AVDD_ON
AUDIO_AVDD_ON 35
+3VRUN
W=30 mil
AUDIO_AVCC
L79
BLM31A260SPT_1206
VDDA typ:80mA
U60
STAC9750
STAC9750_TQFP-48
RESET#
SYNC
SDATA_OUT
BIT_CLK
SDATA_IN
AFLT1
AFLT2
VREFOUT
VREF
CAP2
GPIO0/NC
GPIO1/NC
SPDIF
EAPD
NC/BPCFG
NC/FLTIN
NC/FLTOUT
CID1
CID0
XTL_OUT
XTL_IN
LINE_IN_L
LINE_IN_R
CD_L
CD_C
CD_R
AUX_L
AUX_R
MIC1
MIC2
VIDEO_L
VIDEO_R
PHONE
PC_BEEP
HP_OUT_L
HP_COMM
HP_OUT_R
MONO_OUT
LOUT_L
LOUT_R
INT_CD_L 22
CD_AUDIORET 22
INT_CD_R 22
NB_MICIN 24
MDM_MONO_PHONE 26
HP_OUT_L 24
HP_OUT_R 24
AUD_LINE_OUT_L 24
AUD_LINE_OUT_R 24
24.576MHz_20P_1BX24576CC1A
PACKAGE : 8X4.5X1.5mm
Compal Electronics, Inc.
AC97
ADQ00/LA-1351
Wednesday, January 08, 2003
23 of 52

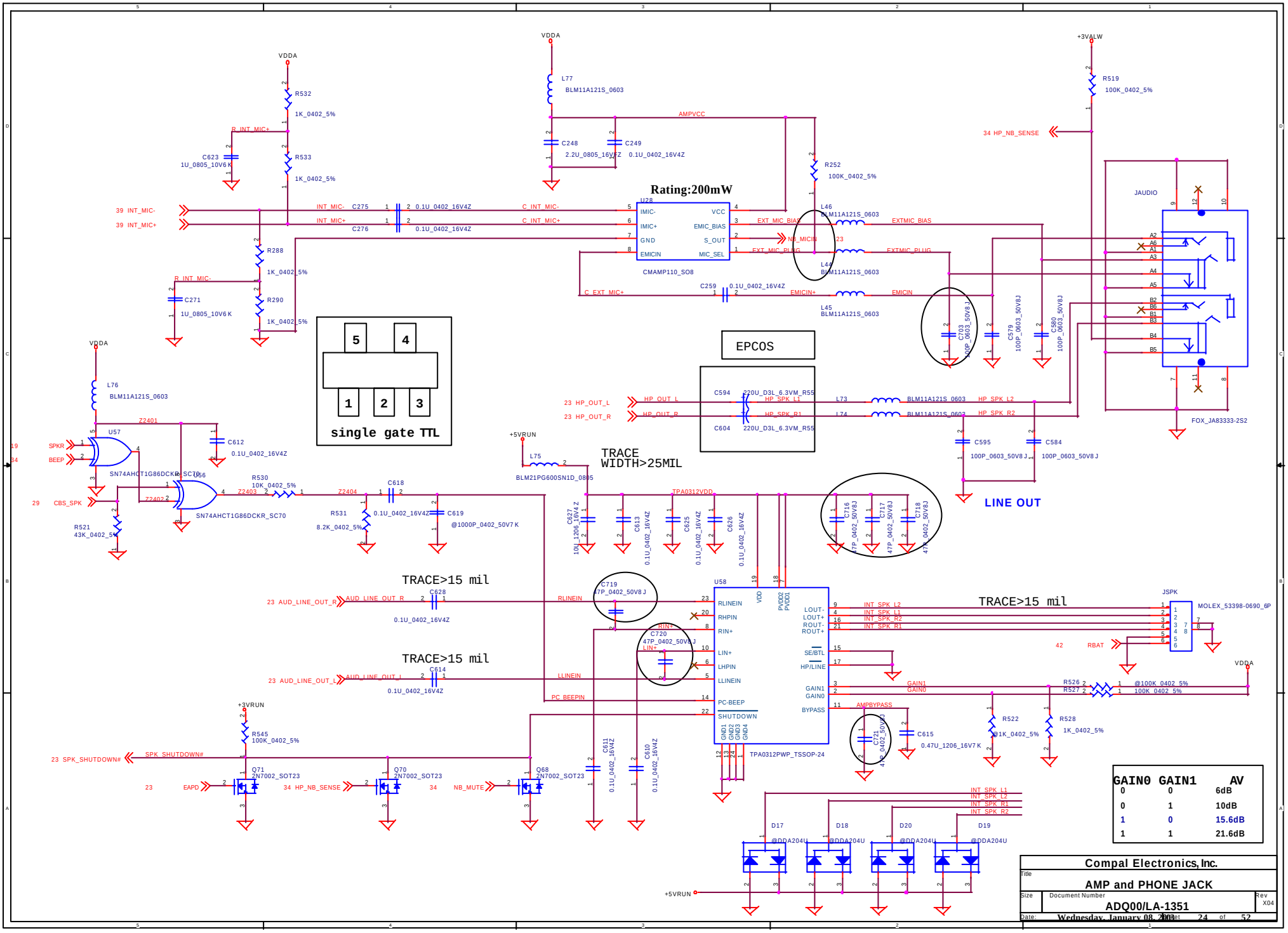
VDDA
R532
1K_0402_5%
R_INT_MIC+
C623
1U_0805_10V6 K
R533
1K_0402_5%
39 INT_MIC-
39 INT_MIC+
INT_MIC-
INT_MIC+
C275
C276
0.1U_0402_16V4Z
C_INT_MIC-
C_INT_MIC+
R288
1K_0402_5%
R_INT_MIC-
C271
1U_0805_10V6 K
R290
1K_0402_5%
L77
BLM11A121S_0603
AMPVCC
C248
2.2U_0805_16V6Z
C249
0.1U_0402_16V4Z
Rating:200mW
U28
IMIC-
IMIC+
GND
EMICIN
VCC
EMIC_BIAS
S_OUT
MIC_SEL
CMAMP110_SO8
EXT_MIC_BIAS
NB_MICIN
EXT_MIC_PLUG
R252
100K_0402_5%
L46
BLM11A121S_0603
EXTMIC_BIAS
L44
BLM11A121S_0603
EXTMIC_PLUG
C_EXT_MIC+
C259
0.1U_0402_16V4Z
EMICIN+
EMICIN
L45
BLM11A121S_0603
+3VALW
R519
100K_0402_5%
34 HP_NB_SENSE
JAUDIO
C703
100P_0603_50V8J
C579
100P_0603_50V8J
C580
100P_0603_50V8J
FOX_JA83333-2S2
EPCOS
C594
220U_D3L_6.3VM_R55
C604
220U_D3L_6.3VM_R55
HP_SPK_L1
HP_SPK_R1
23 HP_OUT_L
23 HP_OUT_R
HP_OUT_L
HP_OUT_R
L73
BLM11A121S_0603
L74
BLM11A121S_0603
HP_SPK_L2
HP_SPK_R2
C595
100P_0603_50V8J
C584
100P_0603_50V8J
LINE OUT
single gate TTL
5
4
1
2
3
VDDA
L76
BLM11A121S_0603
Z2401
U57
SPKR
BEEP
SN74AHCT1G86DCKR-SC70
C612
0.1U_0402_16V4Z
19
34
U56
CBS_SPK
29
Z2402
SN74AHCT1G86DCKR-SC70
R521
43K_0402_5%
R530
10K_0402_5%
Z2403
Z2404
R531
8.2K_0402_5%
C618
0.1U_0402_16V4Z
C619
@1000P_0402_50V7 K
+5VRUN
L75
BLM21PG600SN1D_0805
TRACE
WIDTH>25MIL
TPA0312VDD
C627
10U_1206_16V4Z
C613
0.1U_0402_16V4Z
C625
0.1U_0402_16V4Z
C626
0.1U_0402_16V4Z
C716
47P_0402_50V8J
C717
47P_0402_50V8J
C718
47P_0402_50V8J
TRACE>15 mil
23 AUD_LINE_OUT_R
AUD_LINE_OUT_R
C628
0.1U_0402_16V4Z
RLINEIN
C719
47P_0402_50V8J
U58
RLINEIN
RHPIN
RIN+
LIN+
LHPIN
LLINEIN
PC-BEEP
SHUTDOWN
VDD
PVDD2
PVDD1
GND1
GND2
GND3
GND4
LOUT-
LOUT+
ROUT-
ROUT+
SE/BTL
HP/LINE
GAIN1
GAIN0
BYPASS
TPA0312PWP_TSSOP-24
INT_SPK_L2
INT_SPK_L1
INT_SPK_R2
INT_SPK_R1
TRACE>15 mil
JSPK
MOLEX_53398-0690_6P
42 RBAT
VDDA
R526
R527
@100K_0402_5%
100K_0402_5%
TRACE>15 mil
23 AUD_LINE_OUT_L
AUD_LINE_OUT_L
C614
0.1U_0402_16V4Z
LLINEIN
C720
47P_0402_50V8J
PC_BEEPIN
GAIN1
GAIN0
AMPBYPASS
C721
47P_0402_50V8J
C615
0.47U_1206_16V7 K
R522
@1K_0402_5%
R528
1K_0402_5%
+3VRUN
R545
100K_0402_5%
23 SPK_SHUTDOWN#
SPK_SHUTDOWN#
Q71
2N7002_SOT23
Q70
2N7002_SOT23
Q68
2N7002_SOT23
23 EAPD
34 HP_NB_SENSE
34 NB_MUTE
C611
0.1U_0402_16V4Z
C610
0.1U_0402_16V4Z
D17
D18
D20
D19
@DDA204U
+5VRUN
INT_SPK_L1
INT_SPK_L2
INT_SPK_R1
INT_SPK_R2
GAIN0 GAIN1 AV
0 0 6dB
0 1 10dB
1 0 15.6dB
1 1 21.6dB
Compal Electronics, Inc.
Title
AMP and PHONE JACK
Size
Document Number
ADQ00/LA-1351
Rev
X04
Date: Wednesday, January 08, 2003
Sheet 24 of 52

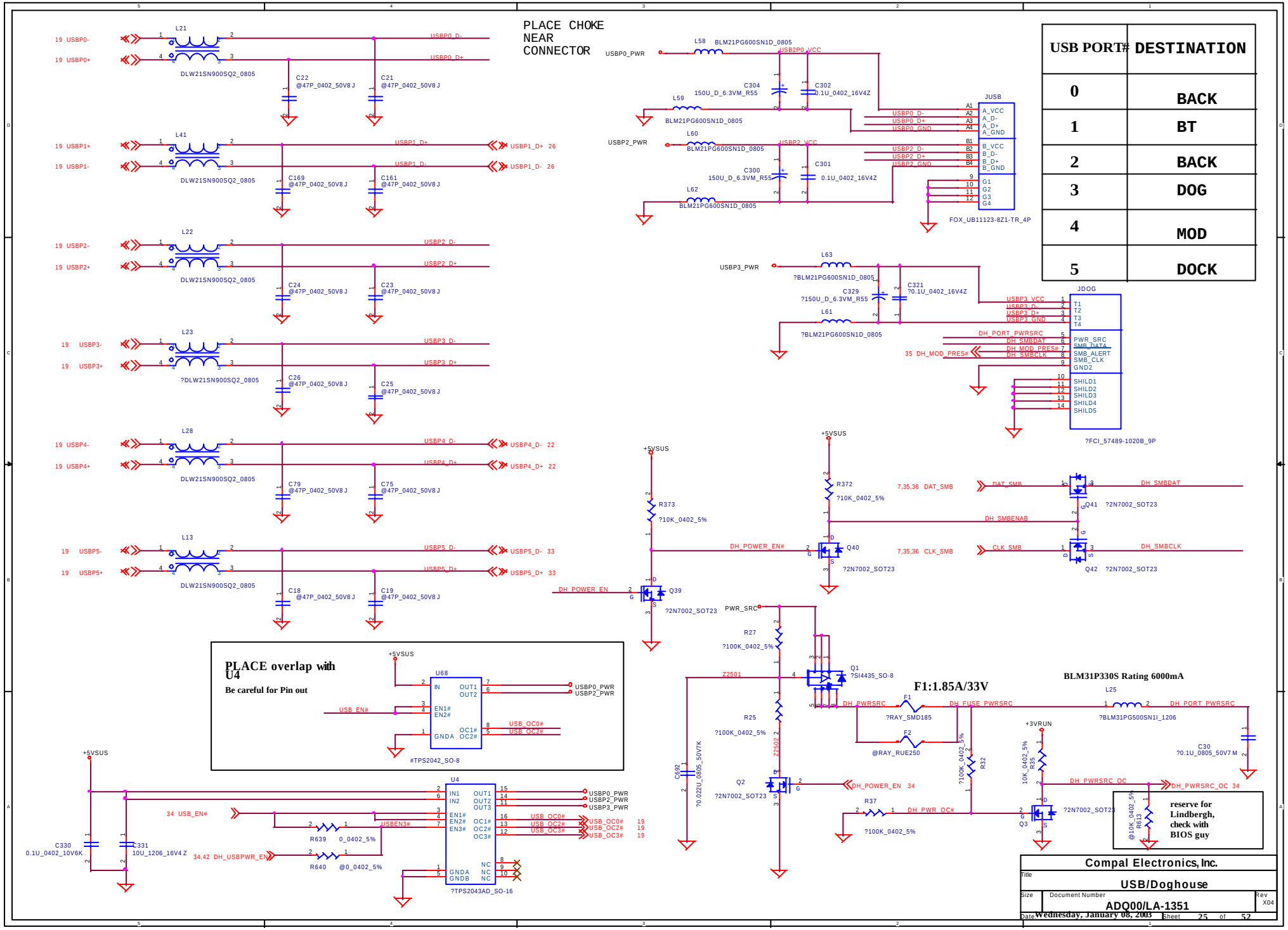
PLACE CHOKE NEAR CONNECTOR
USB PORT# DESTINATION
0 BACK
1 BT
2 BACK
3 DOG
4 MOD
5 DOCK
L21 L41 L22 L23 L28 L13
DLW21SN900SQ2_0805
?DLW21SN900SQ2_0805
L58 L59 L60 L62 L63 L61
BLM21PG600SN1D_0805
?BLM21PG600SN1D_0805
JUSB
FOX_UB11123-8Z1-TR_4P
JDOG
?FCI_57489-1020B_9P
Q39 Q40 Q41 Q42
?2N7002_SOT23
Q1 ?SI4435_SO-8
F1:1.85A/33V
BLM31P330S Rating 6000mA
?BLM31PG500SN1I_1206
PLACE overlap with U4
Be careful for Pin out
#TPS2042_SO-8
?TPS2043AD_SO-16
reserve for Lindbergh, check with BIOS guy
Compal Electronics, Inc.
USB/Doghouse
ADQ00/LA-1351
Wednesday, January 08, 2003
Sheet 25 of 52

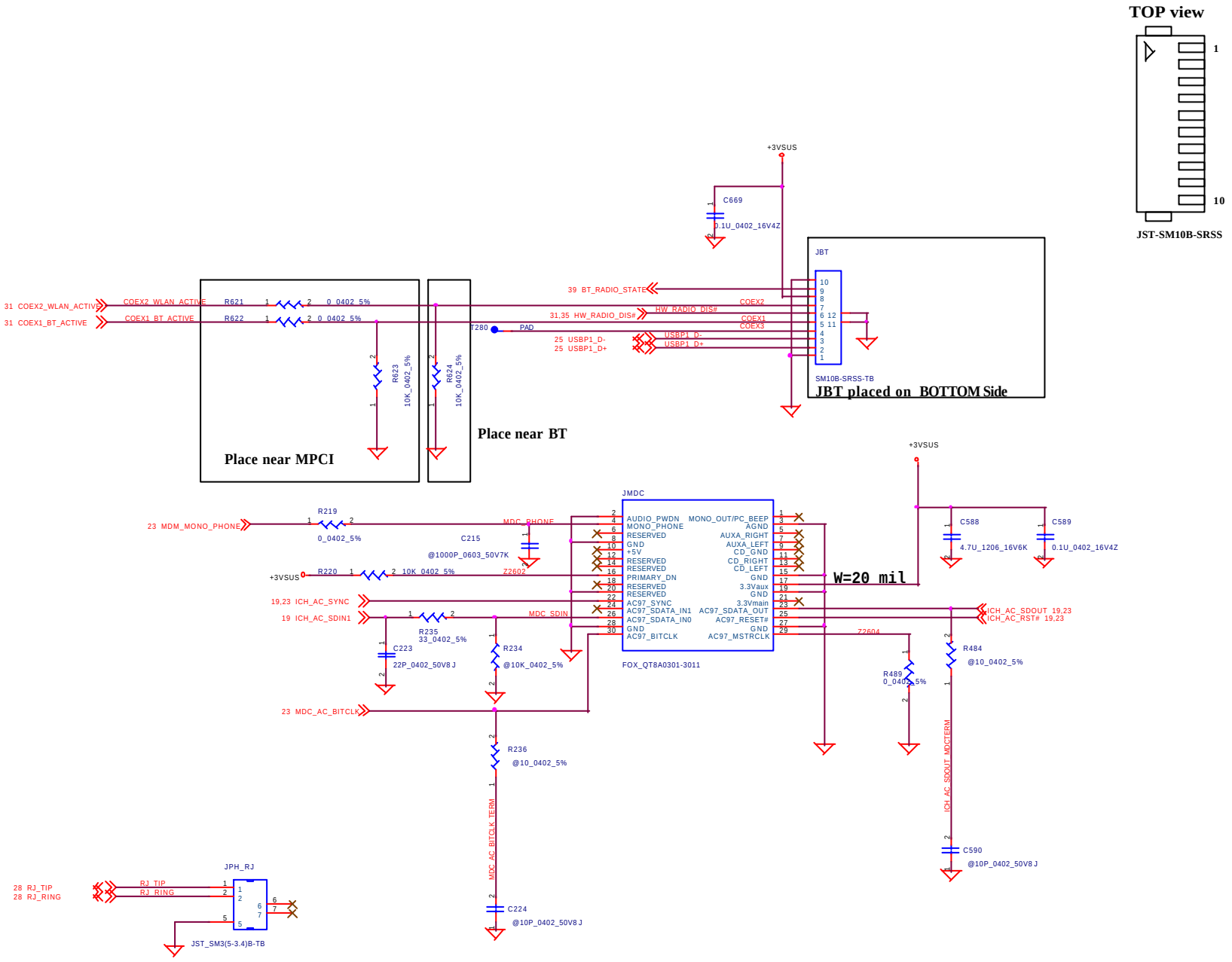

Compal Electronics, Inc.		
Title: BT PORT and MDC		
Size	Document Number: ADQ00/LA-1351	Rev: X04
Date: Wednesday, January 08, 2003	Sheet 26 of 52	

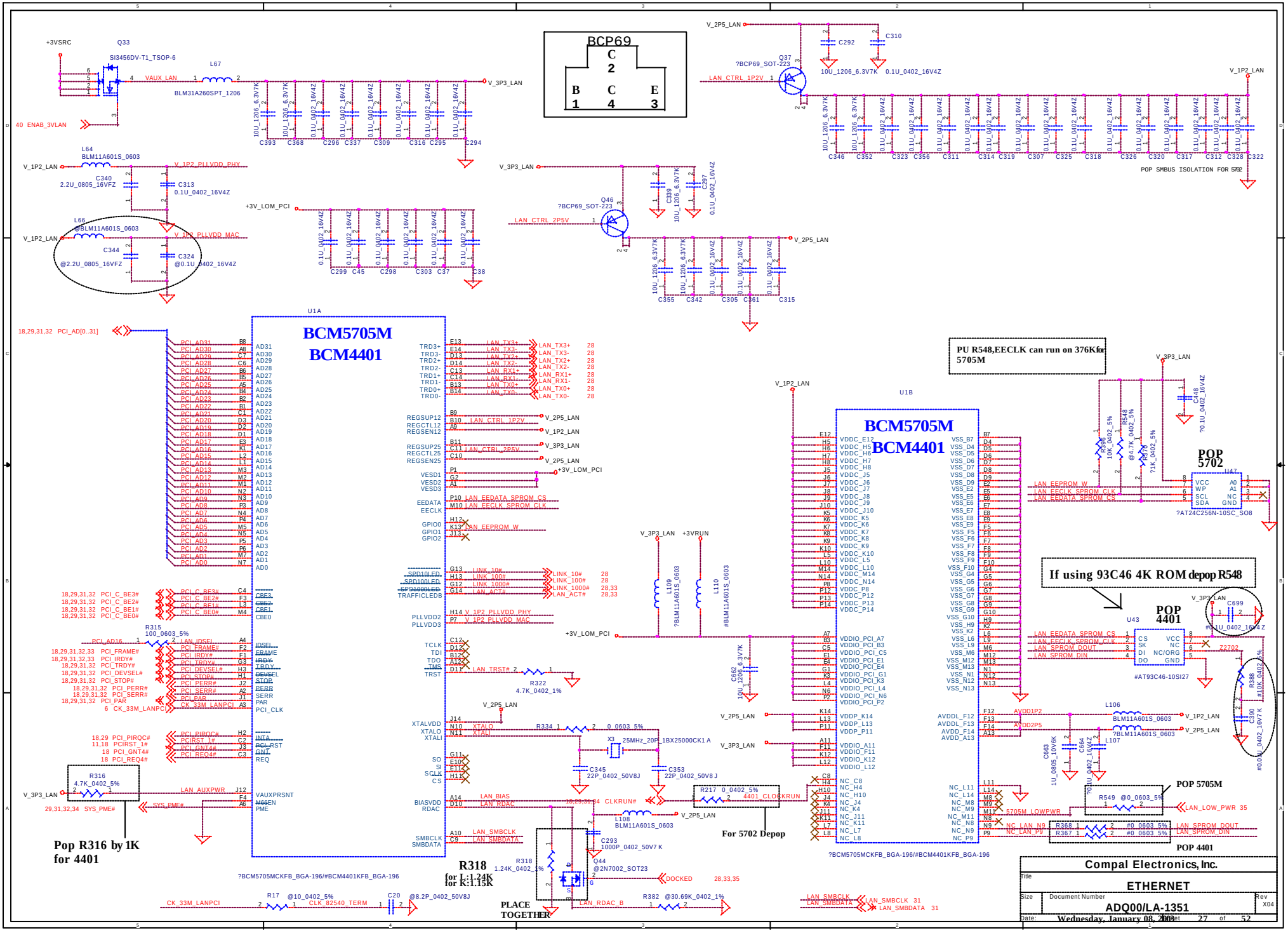
BCP69
C
2
B C E
1 4 3
BCM5705M
BCM4401
U1A
U1B
PU R548,EECLK can run on 376Kfor 5705M
POP 5702
POP 4401
If using 93C46 4K ROM depop R548
Pop R316 by 1K for 4401
R318 for L:1.24K for K:1.15K
PLACE TOGETHER
For 5702 Depop
POP 5705M
POP SMBUS ISOLATION FOR 5702
?BCM5705MCKFB_BGA-196/#BCM4401KFB_BGA-196
Compal Electronics, Inc.
ETHERNET
ADQ00/LA-1351
Wednesday, January 08, 2003
27 of 52

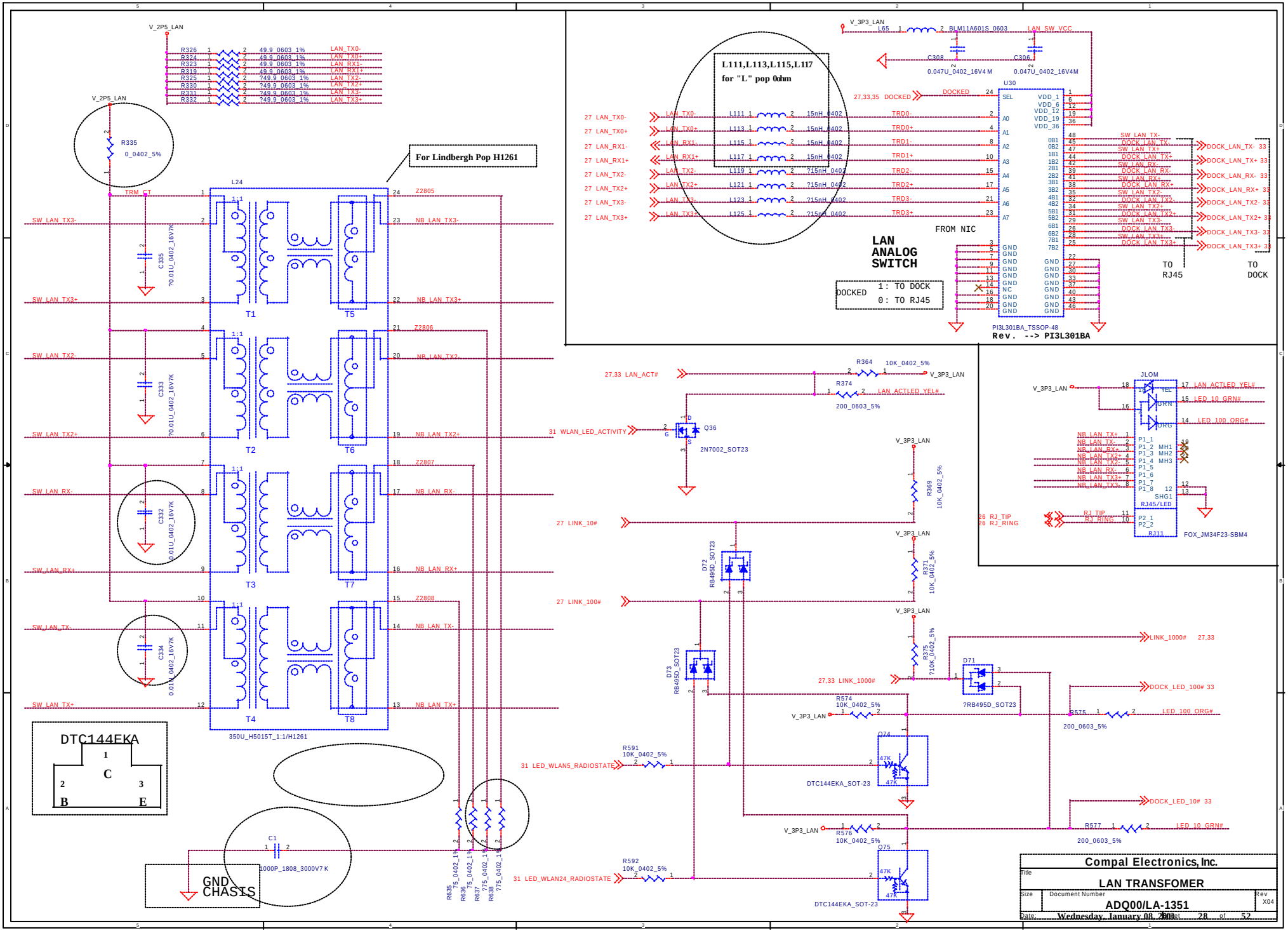
V_2P5_LAN
R326 1 2 49.9 0603 1% LAN_TX0-
R324 1 2 49.9 0603 1% LAN_TX0+
R323 1 2 49.9 0603 1% LAN_RX1-
R319 1 2 49.9 0603 1% LAN_RX1+
R325 1 2 ?49.9 0603 1% LAN_TX2-
R330 1 2 ?49.9 0603 1% LAN_TX2+
R331 1 2 ?49.9 0603 1% LAN_TX3-
R332 1 2 ?49.9 0603 1% LAN_TX3+
R335 0_0402_5%
For Lindbergh Pop H1261
L24
TRM_CT
SW_LAN_TX3-
SW_LAN_TX3+
SW_LAN_TX2-
SW_LAN_TX2+
SW_LAN_RX-
SW_LAN_RX+
SW_LAN_TX-
SW_LAN_TX+
C335 ?0.01U_0402_16V7K
C333 ?0.01U_0402_16V7K
C332 0.01U_0402_16V7K
C334 0.01U_0402_16V7K
T1
T2
T3
T4
T5
T6
T7
T8
Z2805
Z2806
Z2807
Z2808
NB_LAN_TX3-
NB_LAN_TX3+
NB_LAN_TX2-
NB_LAN_TX2+
NB_LAN_RX-
NB_LAN_RX+
NB_LAN_TX-
NB_LAN_TX+
350U_H501ST_1:1/H1261
DTC144EKA
C
B
E
C1
1000P_1808_3000V7 K
GND_CHASIS
R635 ?75_0402_1%
R636 ?75_0402_1%
R637 ?75_0402_1%
R638 ?75_0402_1%
L111,L113,L115,L117 for "L" pop 0ohm
V_3P3_LAN
L65 BLM11A601S_0603
LAN_SW_VCC
C308 0.047U_0402_16V4 M
C306 0.047U_0402_16V4M
27,33,35 DOCKED
DOCKED
U30
SEL
VDD_1
VDD_6
VDD_12
VDD_19
VDD_36
27 LAN_TX0-
27 LAN_TX0+
27 LAN_RX1-
27 LAN_RX1+
27 LAN_TX2-
27 LAN_TX2+
27 LAN_TX3-
27 LAN_TX3+
L111 15nH_0402
L113 15nH_0402
L115 15nH_0402
L117 15nH_0402
L119 ?15nH_0402
L121 ?15nH_0402
L123 ?15nH_0402
L125 ?15nH_0402
TRD0-
TRD0+
TRD1-
TRD1+
TRD2-
TRD2+
TRD3-
TRD3+
FROM NIC
LAN ANALOG SWITCH
DOCKED 1: TO DOCK 0: TO RJ45
PI3L301BA_TSSOP-48
Rev. --> PI3L301BA
SW_LAN_TX-
DOCK_LAN_TX-
SW_LAN_TX+
DOCK_LAN_TX+
SW_LAN_RX-
DOCK_LAN_RX-
SW_LAN_RX+
DOCK_LAN_RX+
SW_LAN_TX2-
DOCK_LAN_TX2-
SW_LAN_TX2+
DOCK_LAN_TX2+
SW_LAN_TX3-
DOCK_LAN_TX3-
SW_LAN_TX3+
DOCK_LAN_TX3+
DOCK_LAN_TX- 33
DOCK_LAN_TX+ 33
DOCK_LAN_RX- 33
DOCK_LAN_RX+ 33
DOCK_LAN_TX2- 33
DOCK_LAN_TX2+ 33
DOCK_LAN_TX3- 33
DOCK_LAN_TX3+ 33
TO RJ45
TO DOCK
27,33 LAN_ACT#
R364 10K_0402_5%
R374 200_0603_5%
LAN_ACTLED_YEL#
31 WLAN_LED_ACTIVITY
Q36
2N7002_SOT23
27 LINK_10#
27 LINK_100#
R369 10K_0402_5%
R371 10K_0402_5%
R370 ?10K_0402_5%
D72 RB495D_SOT23
D73 RB495D_SOT23
D71 ?RB495D_SOT23
LINK_1000# 27,33
27,33 LINK_1000#
R574 10K_0402_5%
R591 10K_0402_5%
31 LED_WLAN5_RADIOSTATE
Q74
47K
DTC144EKA_SOT-23
R576 10K_0402_5%
R592 10K_0402_5%
31 LED_WLAN24_RADIOSTATE
Q75
R575 200_0603_5%
R577 200_0603_5%
DOCK_LED_100# 33
LED_100_ORG#
DOCK_LED_10# 33
LED_10_GRN#
JLOM
YEL
GRN
ORG
LAN_ACTLED_YEL#
LED_10_GRN#
LED_100_ORG#
NB_LAN_TX+
NB_LAN_TX-
NB_LAN_RX+
NB_LAN_TX2+
NB_LAN_TX2-
NB_LAN_RX-
NB_LAN_TX3+
NB_LAN_TX3-
P1_1
P1_2 MH1
P1_3 MH2
P1_4 MH3
P1_5
P1_6
P1_7
P1_8
SHG1
RJ45/LED
RJ_TIP
RJ_RING
26 RJ_TIP
26 RJ_RING
P2_1
P2_2
RJ11
FOX_JM34F23-SBM4
Compal Electronics, Inc.
Title
LAN TRANSFOMER
Size
Document Number
ADQ00/LA-1351
Rev
X04
Date: Wednesday, January 08, 2003
Sheet 28 of 52

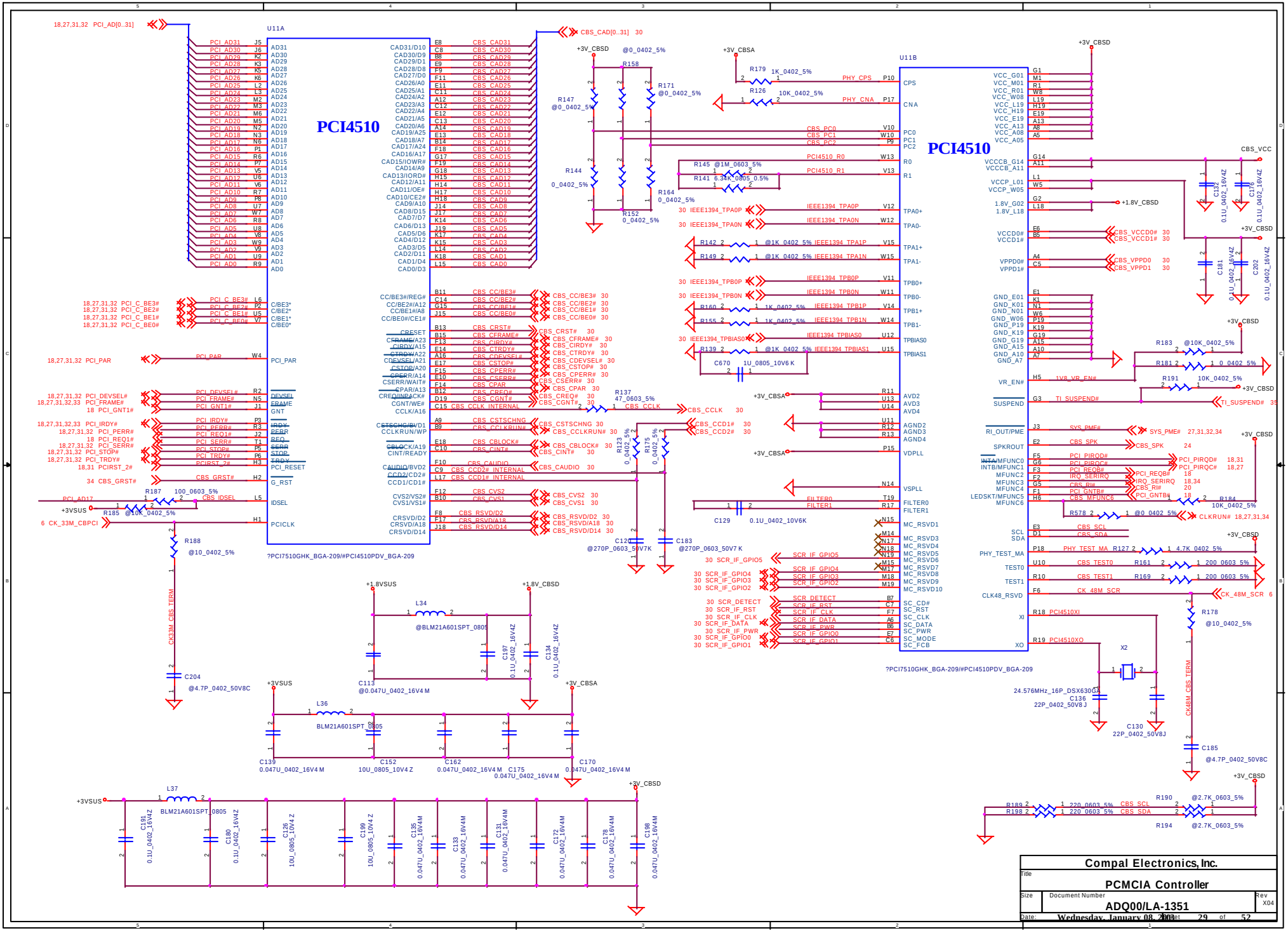
PCI4510
U11A
?PCI7510GHK_BGA-209/#PCI4510PDV_BGA-209
PCI4510
U11B
?PCI7510GHK_BGA-209/#PCI4510PDV_BGA-209
Compal Electronics, Inc.
PCMCIA Controller
ADQ00/LA-1351
Wednesday, January 08, 2003
29 of 52

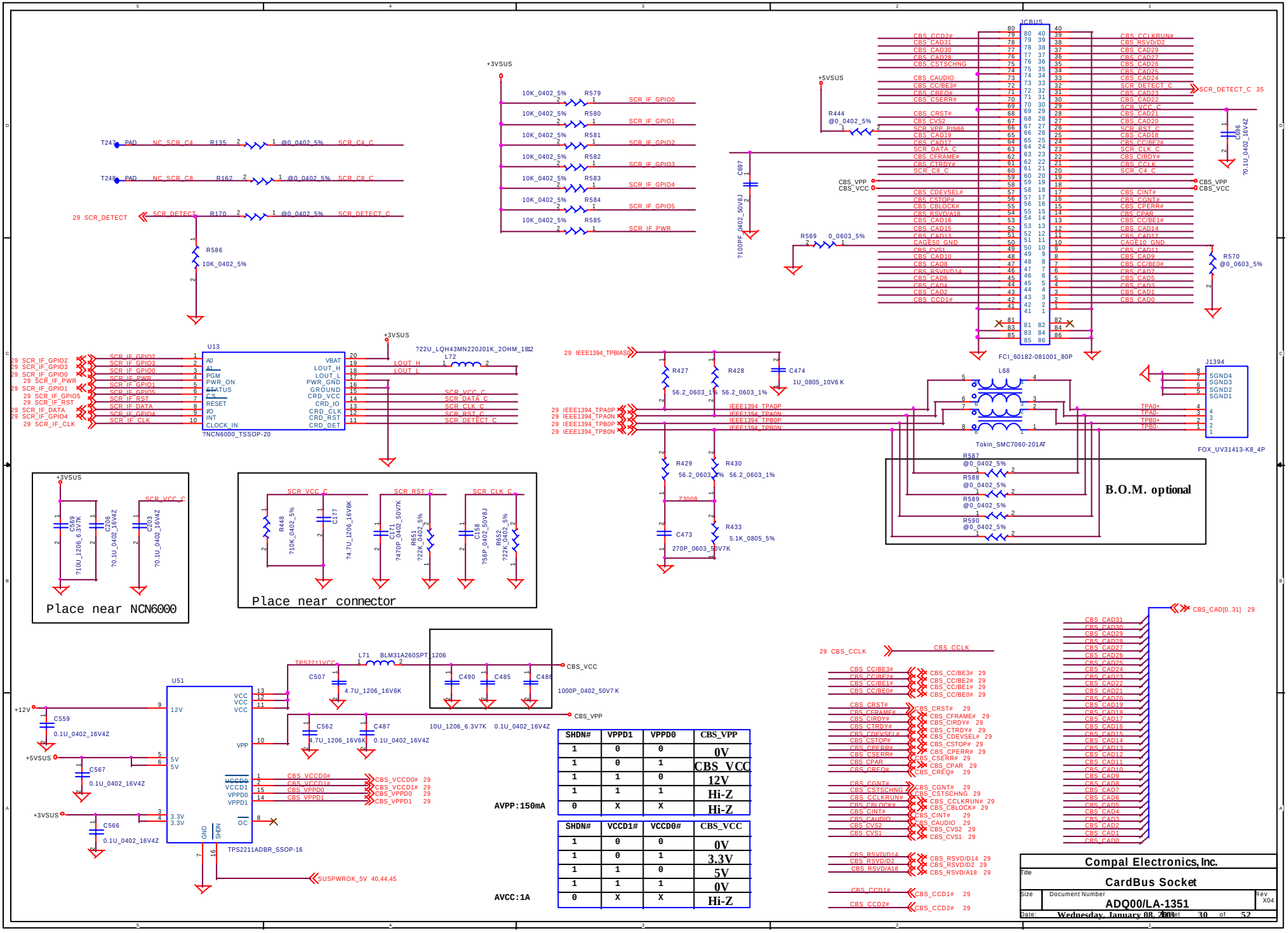

SHDN#	VPPD1	VPPD0	CBS_VPP
1	0	0	0V
1	0	1	CBS_VCC
1	1	0	12V
1	1	1	Hi-Z
0	X	X	Hi-Z

SHDN#	VCCD1#	VCCD0#	CBS_VCC
1	0	0	0V
1	0	1	3.3V
1	1	0	5V
1	1	1	0V
0	X	X	Hi-Z

Compal Electronics, Inc.	
Title	CardBus Socket
Size	Document Number: ADQ00/LA-1351
Rev	X04
Date: Wednesday, January 08, 2003	Sheet 30 of 52

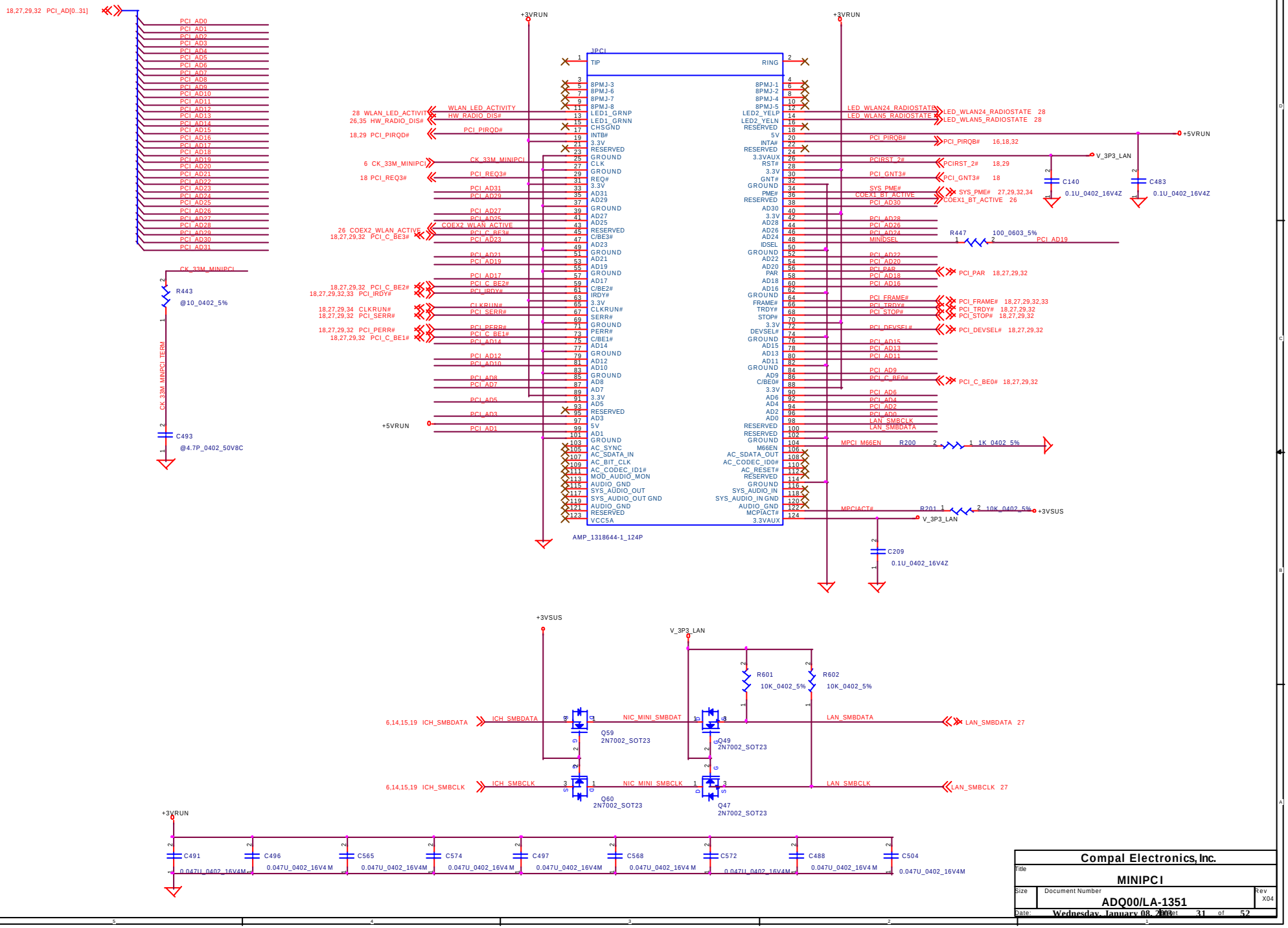

Compal Electronics, Inc.		
Title: MINIPCI		
Size	Document Number: ADQ00/LA-1351	Rev: X04
Date: Wednesday, January 08, 2003	Sheet 31 of 52	

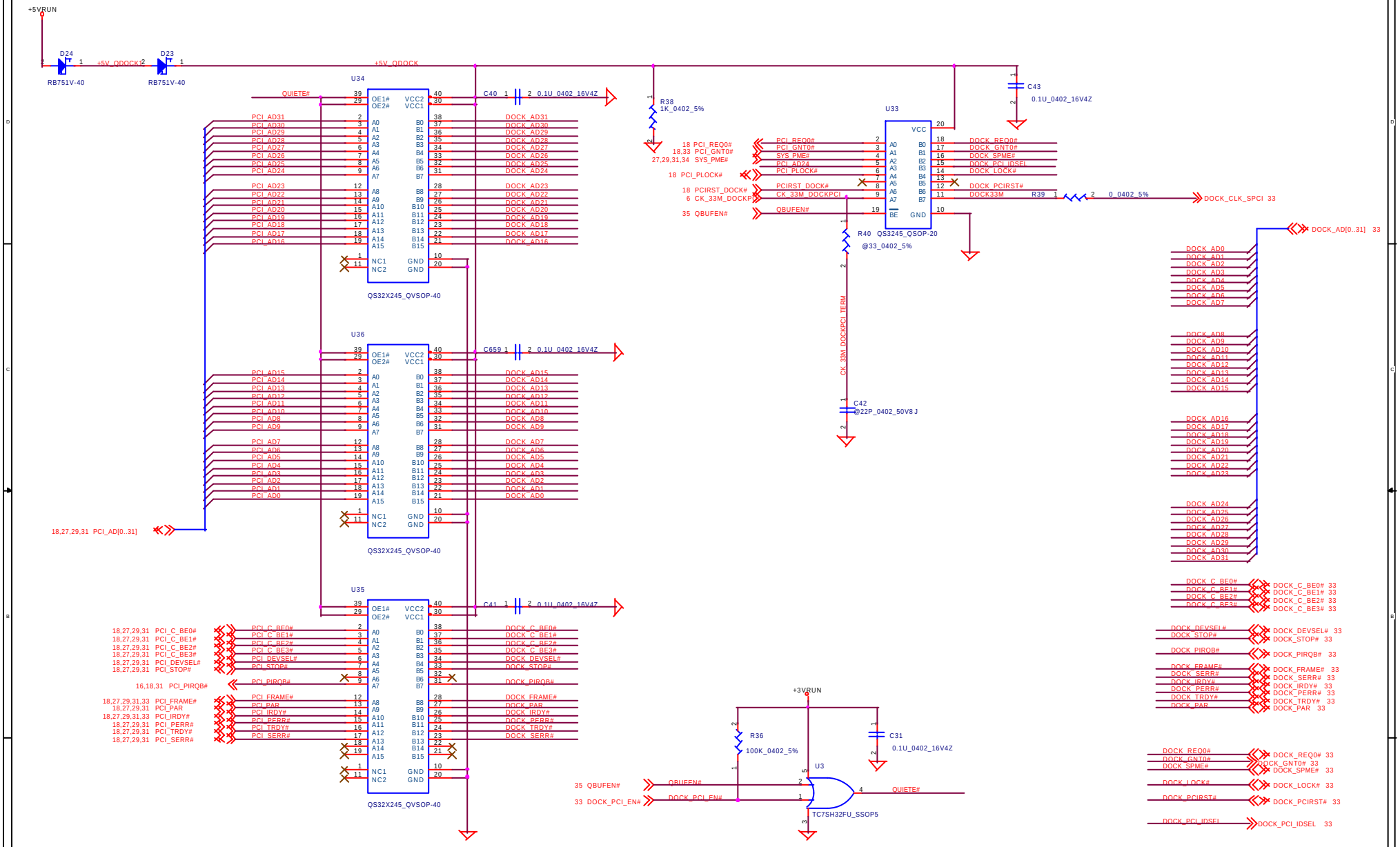
+5VRUN
D24
RB751V-40
D23
RB751V-40
+5V_QDOCK
+5V_QDOCK
U34
U36
U35
U33
QS32X245_QVSOP-40
C40 0.1U_0402_16V4Z
C659 0.1U_0402_16V4Z
C41 0.1U_0402_16V4Z
C43 0.1U_0402_16V4Z
R38 1K_0402_5%
R40 QS3245_QSOP-20
@33_0402_5%
C42 @22P_0402_50V8J
R39 0_0402_5%
R36 100K_0402_5%
C31 0.1U_0402_16V4Z
U3 TC7SH32FU_SSOP5
+3VRUN
DOCK_CLK_SPCI 33
DOCK_AD[0..31] 33
18,27,29,31 PCI_AD[0..31]
CK_33M_DOCKPCI_TERM
Compal Electronics, Inc.
DOCKING BUFFER
ADQ00/LA-1351
Wednesday, January 08, 2003
Sheet 32 of 52

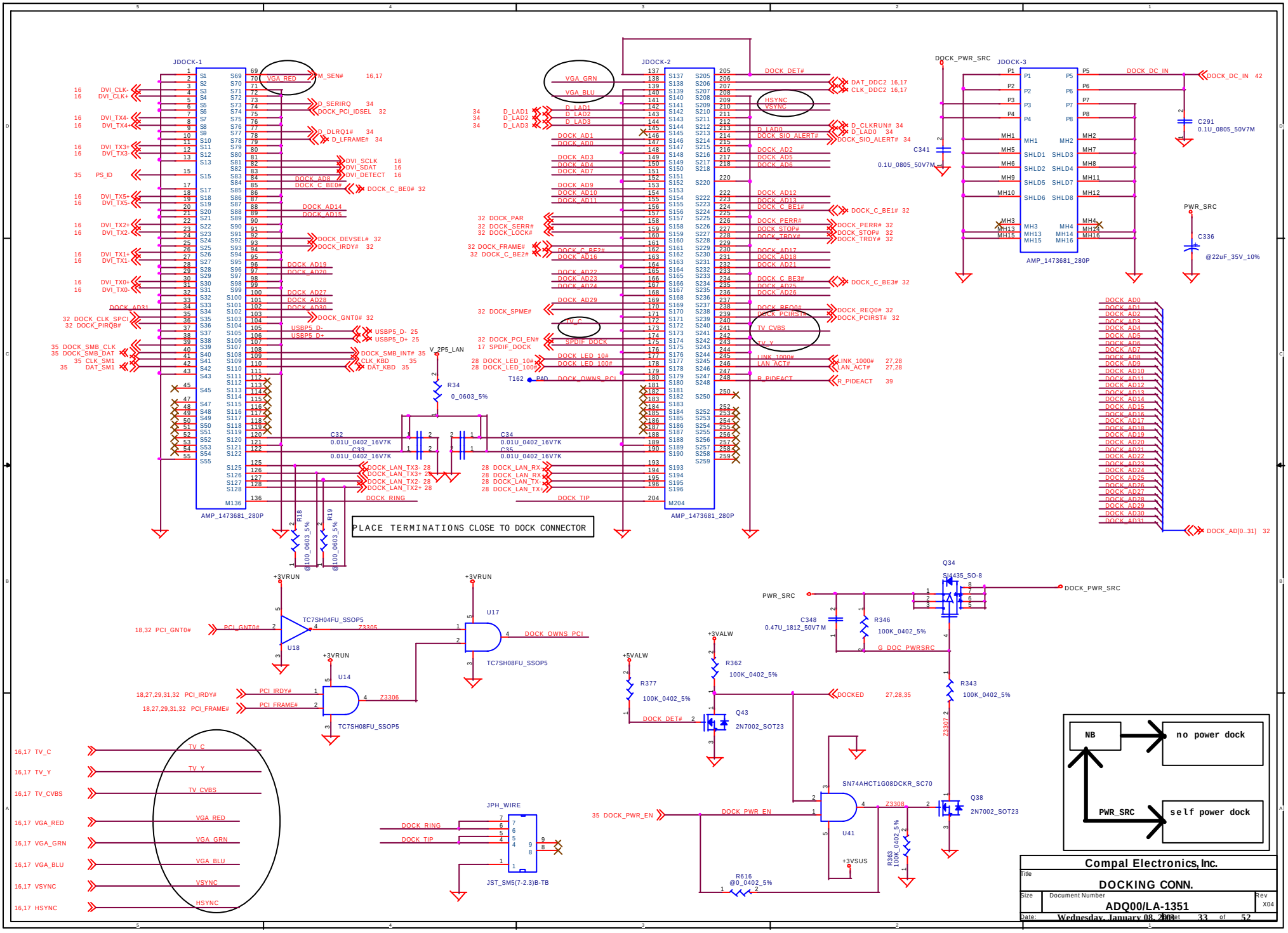
JDOCK-1
JDOCK-2
JDOCK-3
AMP_1473681_280P
PLACE TERMINATIONS CLOSE TO DOCK CONNECTOR
DOCK_PWR_SRC
PWR_SRC
V_2P5_LAN
+3VRUN
+3VALW
+5VALW
+3VSUS
TC7SH04FU_SSOP5
TC7SH08FU_SSOP5
SN74AHCT1G08DCKR_SC70
SI4435_SO-8
2N7002_SOT23
JPH_WIRE
JST_SM5(7-2.3)B-TB
NB
no power dock
PWR_SRC
self power dock
Compal Electronics, Inc.
DOCKING CONN.
ADQ00/LA-1351
Wednesday, January 08, 2003
33 of 52

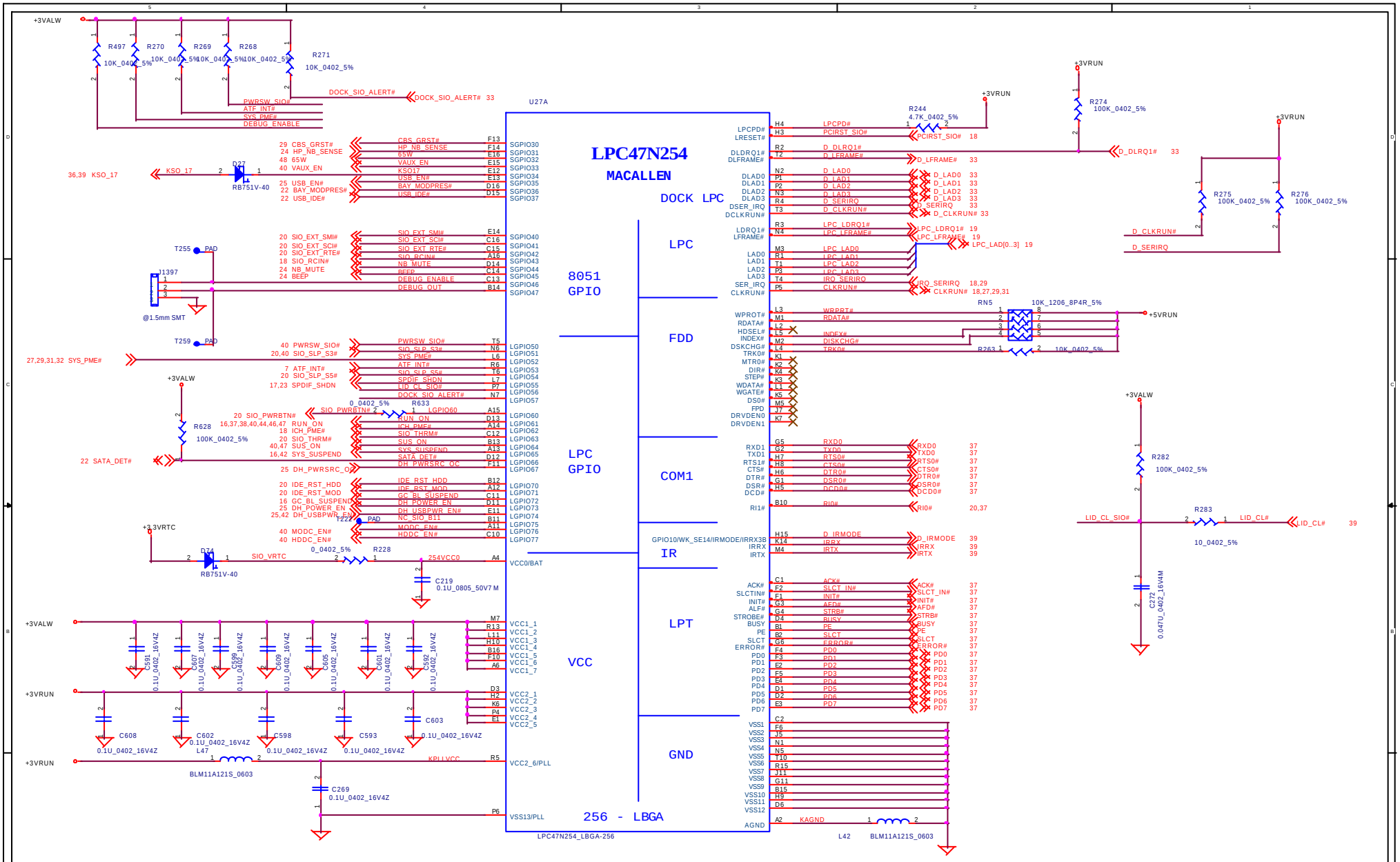
LPC47N254
MACALLEN
U27A
DOCK LPC
LPC
8051 GPIO
FDD
LPC GPIO
COM1
IR
LPT
VCC
GND
256 - LBGA
LPC47N254_LBGA-256
+3VALW
+3VRUN
+5VRUN
+3.3VRTC
R497 10K_0402_5%
R270 10K_0402_5%
R269 10K_0402_5%
R268 10K_0402_5%
R271 10K_0402_5%
DOCK_SIO_ALERT#
PWRSW_SIO#
ATF_INT#
SYS_PME#
DEBUG_ENABLE
CBS_GRST#
HP_NB_SENSE
65W
VAUX_EN
KSO17
USB_EN#
BAY_MODPRES#
USB_IDE#
KSO_17
D27 RB751V-40
SIO_EXT_SMI#
SIO_EXT_SCI#
SIO_EXT_RTE#
SIO_RCIN#
NB_MUTE
BEEP
DEBUG_ENABLE
DEBUG_OUT
J1397
@1.5mm SMT
T255 PAD
T259 PAD
PWRSW_SIO#
SIO_SLP_S3#
SYS_PME#
ATF_INT#
SIO_SLP_S5#
SPDIF_SHDN
LID_CL_SIO#
DOCK_SIO_ALERT#
SIO_PWRBTN#
RUN_ON
ICH_PME#
SIO_THRM#
SUS_ON
SYS_SUSPEND
SATA_DET#
DH_PWRSRC_OC
R633 0_0402_5%
R628 100K_0402_5%
IDE_RST_HDD
IDE_RST_MOD
GC_BL_SUSPEND
DH_POWER_EN
DH_USBPWR_EN
NC_SIO_B11
MODC_EN#
HDDC_EN#
T227 PAD
D24 RB751V-40
SIO_VRTC
R228 0_0402_5%
254VCC0
C219 0.1U_0805_50V7 M
C591 C607 C609 C605 C601 C592 0.1U_0402_16V4Z
C608 C602 C598 C593 C603 0.1U_0402_16V4Z
L47 BLM11A121S_0603
KPLLVCC
C269 0.1U_0402_16V4Z
R244 4.7K_0402_5%
R274 100K_0402_5%
R275 100K_0402_5%
R276 100K_0402_5%
D_DLRQ1#
D_LFRAME#
D_LAD0
D_LAD1
D_LAD2
D_LAD3
D_SERIRQ
D_CLKRUN#
LPC_LDRQ1#
LPC_LFRAME#
LPC_LAD[0..3]
LPC_LAD0
LPC_LAD1
LPC_LAD2
LPC_LAD3
IRQ_SERIRQ
CLKRUN#
RN5 10K_1206_8P4R_5%
R263 10K_0402_5%
WPROT#
RDATA#
HDSEL#
INDEX#
DSKCHG#
TRK0#
MTR0#
DIR#
STEP#
WDATA#
WGATE#
DS0#
FPD
DRVDEN0
DRVDEN1
RXD0
TXD0
RTS0#
CTS0#
DTR0#
DSR0#
DCD0#
RI0#
D_IRMODE
IRRX
IRTX
ACK#
SLCT_IN#
INIT#
AFD#
STRB#
BUSY
PE
SLCT
ERROR#
PD0
PD1
PD2
PD3
PD4
PD5
PD6
PD7
R282 100K_0402_5%
R283 10_0402_5%
C272 0.047U_0402_16V4M
L42 BLM11A121S_0603
KAGND
Compal Electronics, Inc.
SIO (1/2)
ADQ00/LA-1351
X03
Wednesday, January 08, 2003
34 of 52

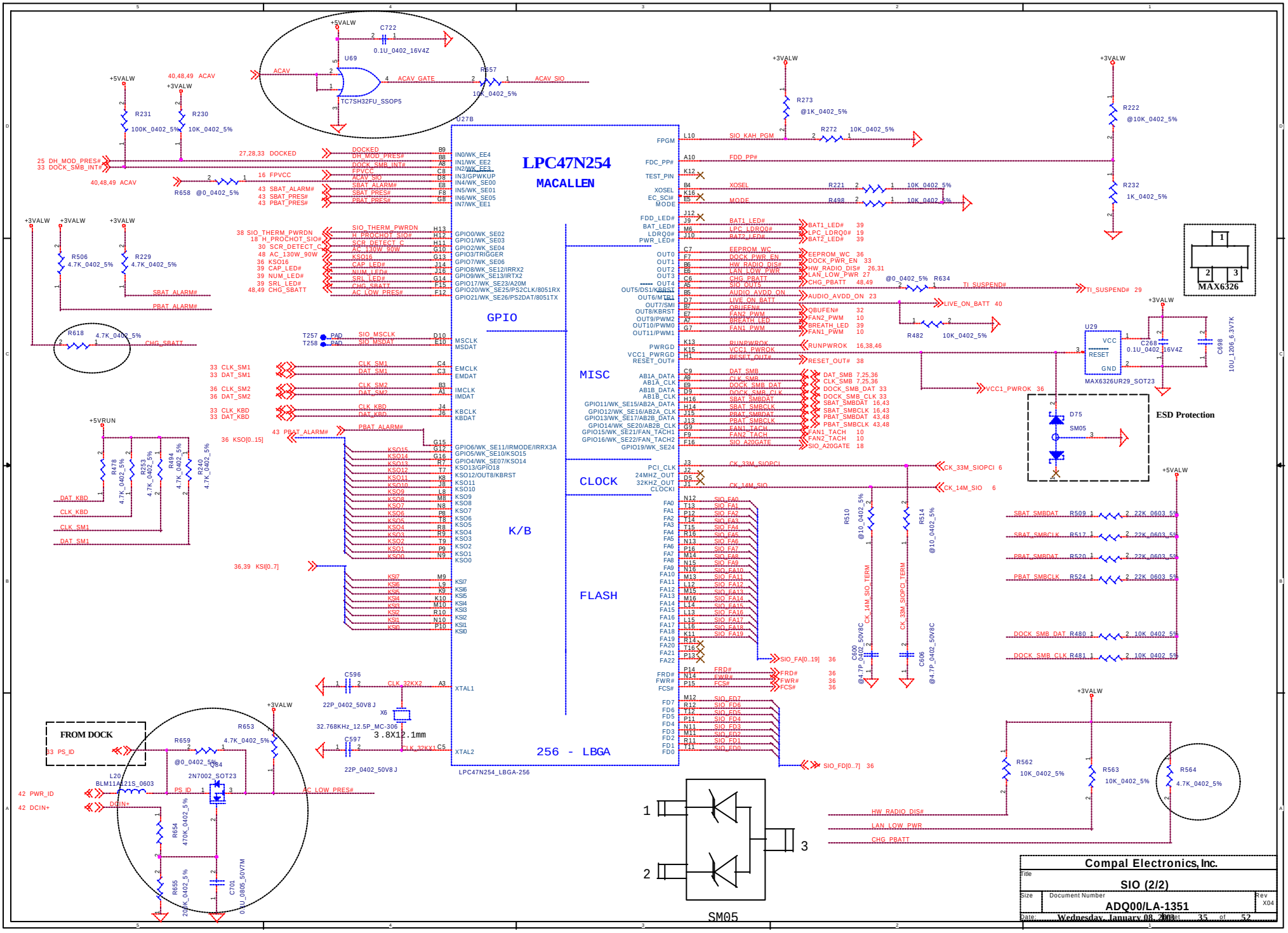
LPC47N254
MACALLEN
U27B
GPIO
MISC
CLOCK
K/B
FLASH
256 - LBGA
LPC47N254_LBGA-256
FROM DOCK
ESD Protection
MAX6326
SM05
Compal Electronics, Inc.
SIO (2/2)
ADQ00/LA-1351
Wednesday, January 08, 2003
35 of 52

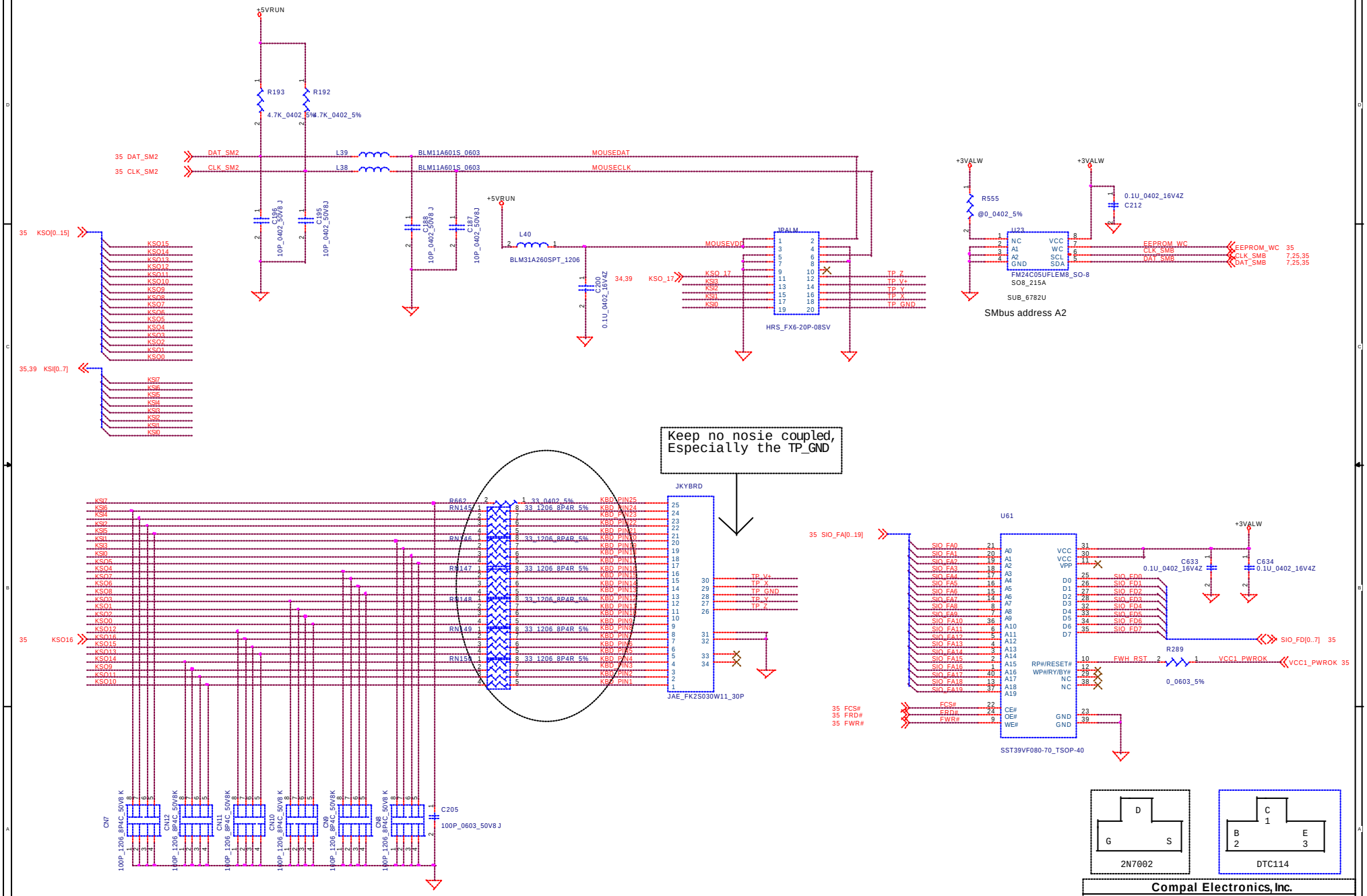

Compal Electronics, Inc.		
Title: INT KB		
Size	Document Number: ADQ00/LA-1351	Rev: X04
Date: Wednesday, January 08, 2003	Sheet 36 of 52	

Parallel Port

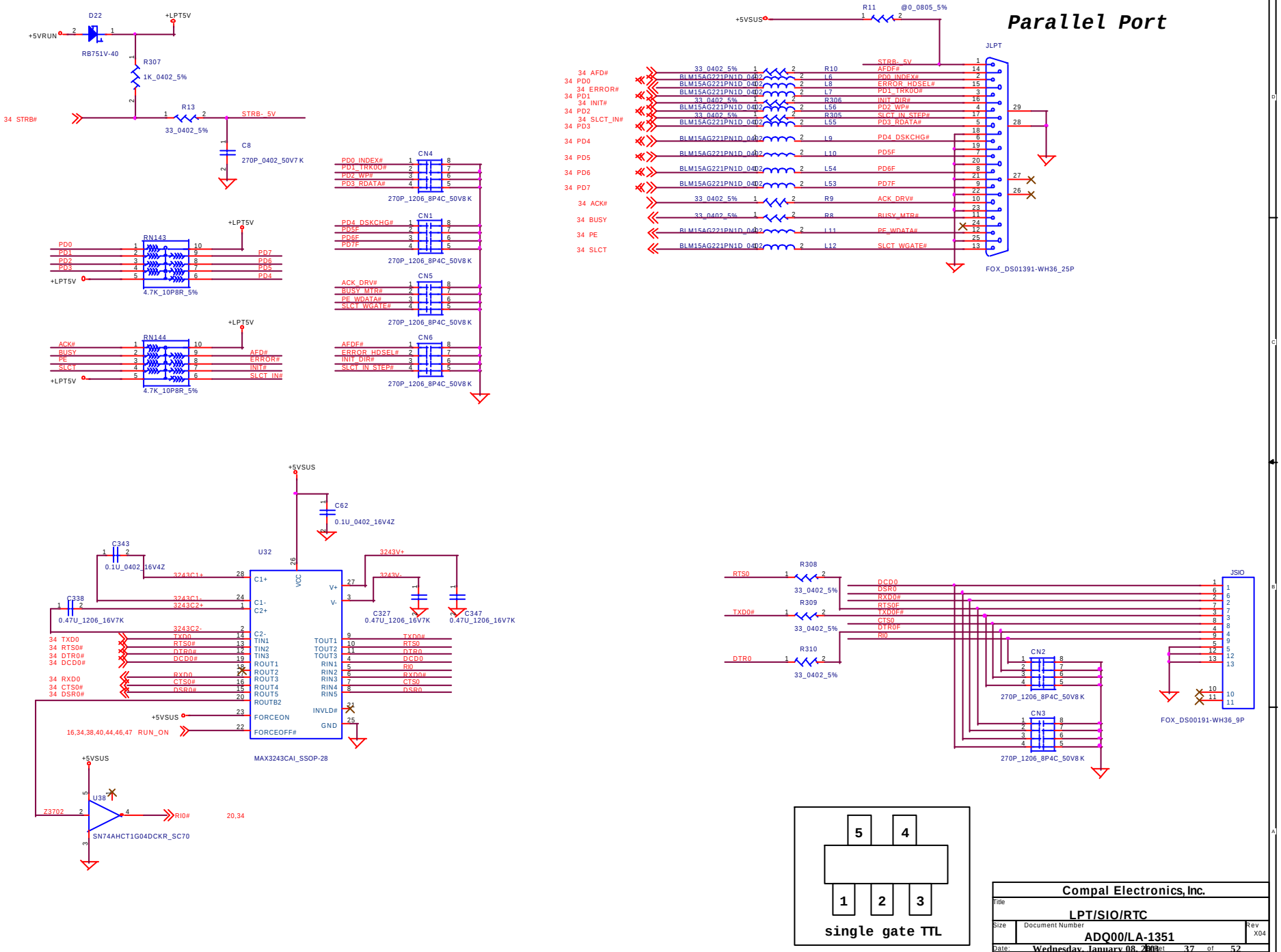

Compal Electronics, Inc.		
Title: LPT/SIO/RTC		
Size	Document Number: ADQ00/LA-1351	Rev: X04
Date: Wednesday, January 08, 2003	Sheet 37 of 52	

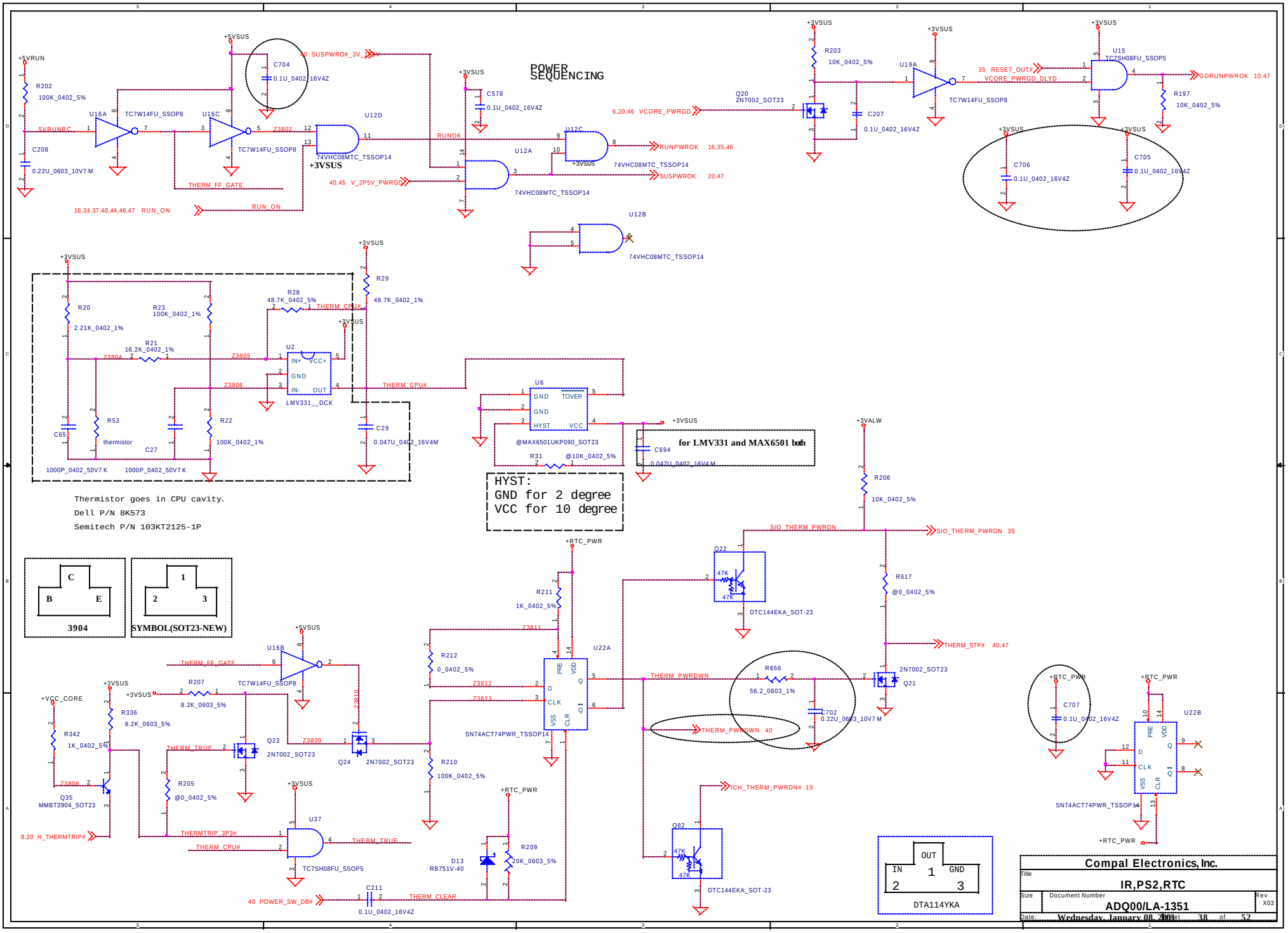
POWER SEQUENCING
+5VRUN
R202
100K_0402_5%
C208
0.22U_0603_10V7 M
U16A
TC7W14FU_SSOP8
U16C
TC7W14FU_SSOP8
5VRUNRC
THERM_FF_GATE
RUN_ON
16,34,37,40,44,46,47 RUN_ON
+5VSUS
C704
0.1U_0402_16V4Z
10 SUSPWROK_3V_1P5V
U12D
74VHC08MTC_TSSOP14
+3VSUS
Z3802
RUNOK
C578
0.1U_0402_16V4Z
U12A
74VHC08MTC_TSSOP14
40,45 V_2P5V_PWRGD
U12C
74VHC08MTC_TSSOP14
RUNPWROK 16,35,46
SUSPWROK 20,47
U12B
74VHC08MTC_TSSOP14
6,20,46 VCORE_PWRGD
Q20
2N7002_SOT23
R203
10K_0402_5%
C207
0.1U_0402_16V4Z
U19A
TC7W14FU_SSOP8
35 RESET_OUT#
VCORE_PWRGD_DLYD
U15
TC7SH08FU_SSOP5
GDRUNPWROK 10,47
R197
10K_0402_5%
C706
0.1U_0402_16V4Z
C705
0.1U_0402_16V4Z
R20
2.21K_0402_1%
R23
100K_0402_1%
R21
16.2K_0402_1%
Z3804
Z3805
Z3806
R28
48.7K_0402_5%
THERM_CPU#
R29
48.7K_0402_1%
U2
LMV331__DCK
C65
1000P_0402_50V7 K
R53
thermistor
C27
1000P_0402_50V7 K
R22
100K_0402_1%
C29
0.047U_0402_16V4M
U6
@MAX6501UKP090_SOT23
R31
@10K_0402_5%
C694
0.047U_0402_16V4 M
for LMV331 and MAX6501 both
HYST:
GND for 2 degree
VCC for 10 degree
Thermistor goes in CPU cavity.
Dell P/N 8K573
Semitech P/N 103KT2125-1P
3904
SYMBOL(SOT23-NEW)
+3VALW
R206
10K_0402_5%
SIO_THERM_PWRDN
SIO_THERM_PWRDN 35
Q22
DTC144EKA_SOT-23
R617
@0_0402_5%
THERM_STP# 40,47
+RTC_PWR
R211
1K_0402_5%
Z3811
U22A
SN74ACT74PWR_TSSOP14
R212
0_0402_5%
Z3812
Z3813
THERM_PWRDWN
R656
56.2_0603_1%
C702
0.22U_0603_10V7 M
Q21
2N7002_SOT23
THERM_PWRDWN 40
ICH_THERM_PWRDN# 19
Q82
DTC144EKA_SOT-23
R210
100K_0402_5%
+VCC_CORE
R342
1K_0402_5%
Z3808
Q35
MMBT3904_SOT23
8,20 H_THERMTRIP#
R336
8.2K_0603_5%
R207
8.2K_0603_5%
THERM_TRUE
Q23
2N7002_SOT23
Z3809
Q24
2N7002_SOT23
Z3810
R205
@0_0402_5%
U37
TC7SH08FU_SSOP5
THERMTRIP_3P3#
THERM_CPU#
THERM_TRUE
D13
RB751V-40
R209
20K_0603_5%
C211
0.1U_0402_16V4Z
40 POWER_SW_DB#
THERM_CLEAR
C707
0.1U_0402_16V4Z
U22B
SN74ACT74PWR_TSSOP14
OUT
IN
GND
DTA114YKA
Compal Electronics, Inc.
Title
IR,PS2,RTC
Size
Document Number
ADQ00/LA-1351
Rev
X03
Date: Wednesday, January 08, 2003
Sheet 38 of 52

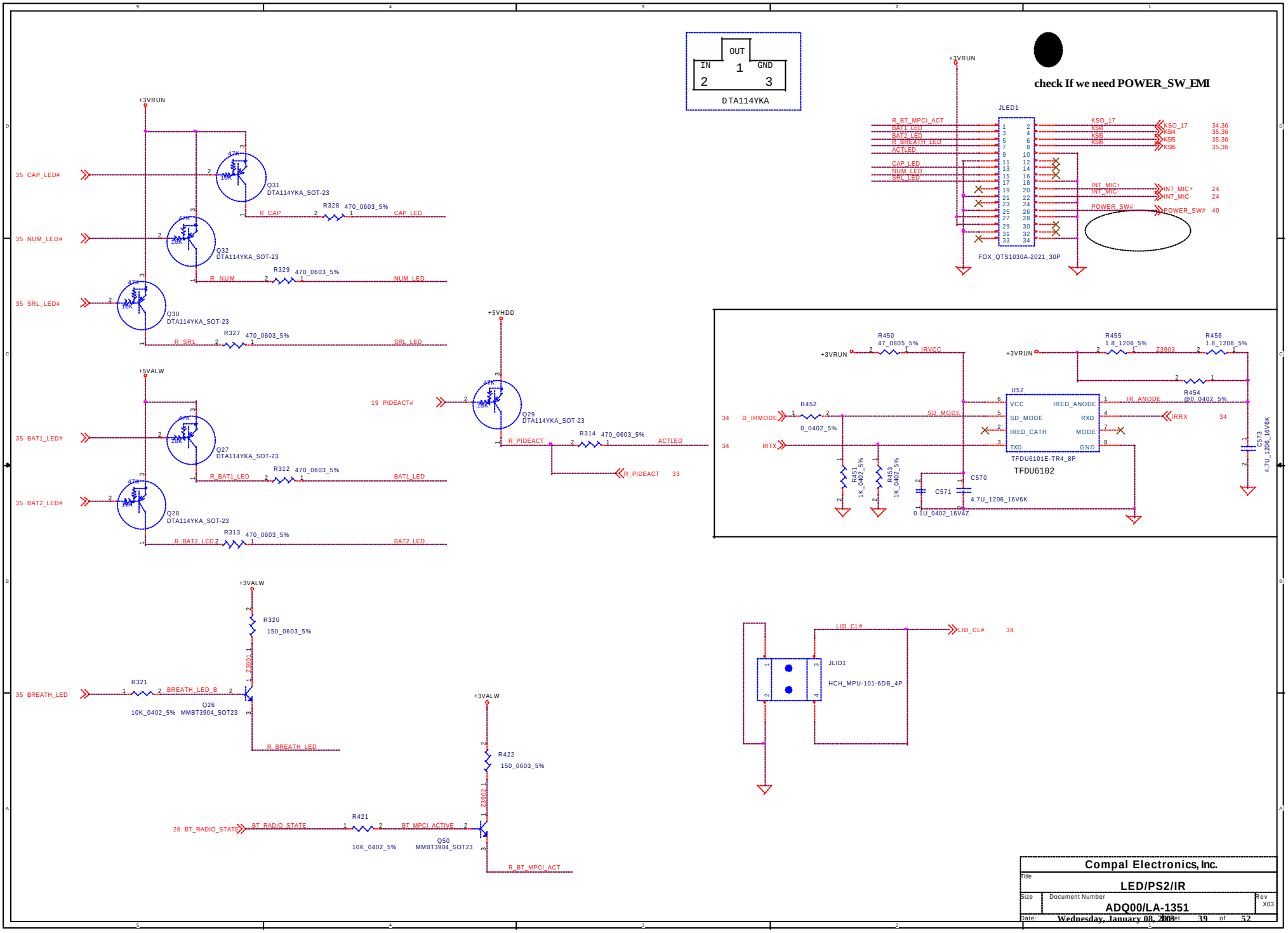
OUT
IN 1 GND
2 3
DTA114YKA
check If we need POWER_SW_EMI
+3VRUN
JLED1
FOX_QTS1030A-2021_30P
35 CAP_LED#
35 NUM_LED#
35 SRL_LED#
Q31 DTA114YKA_SOT-23
Q32 DTA114YKA_SOT-23
Q30 DTA114YKA_SOT-23
R328 470_0603_5%
R329 470_0603_5%
R327 470_0603_5%
+5VALW
35 BAT1_LED#
35 BAT2_LED#
Q27 DTA114YKA_SOT-23
Q28 DTA114YKA_SOT-23
R312 470_0603_5%
R313 470_0603_5%
+5VHDD
19 PIDEACT#
Q29 DTA114YKA_SOT-23
R314 470_0603_5%
R_PIDEACT 33
ACTLED
U52
TFDU6101E-TR4_8P
TFDU6102
R450 47_0805_5%
R452 0_0402_5%
R451 1K_0402_5%
R453 1K_0402_5%
R454 @0_0402_5%
R455 1.8_1206_5%
R456 1.8_1206_5%
C570 4.7U_1206_16V6K
C571 0.1U_0402_16V4Z
C573 4.7U_1206_16V6K
34 D_IRMODE
34 IRTX
IRRX 34
IR_ANODE
SD_MODE
+3VALW
35 BREATH_LED
R320 150_0603_5%
R321 10K_0402_5%
Q26 MMBT3904_SOT23
R_BREATH_LED
R422 150_0603_5%
R421 10K_0402_5%
Q50 MMBT3904_SOT23
26 BT_RADIO_STATE
BT_MPCI_ACTIVE
R_BT_MPCI_ACT
LID_CL# 34
JLID1
HCH_MPU-101-6DB_4P
Compal Electronics, Inc.
LED/PS2/IR
ADQ00/LA-1351
X03
Wednesday, January 08, 2003
39 of 52

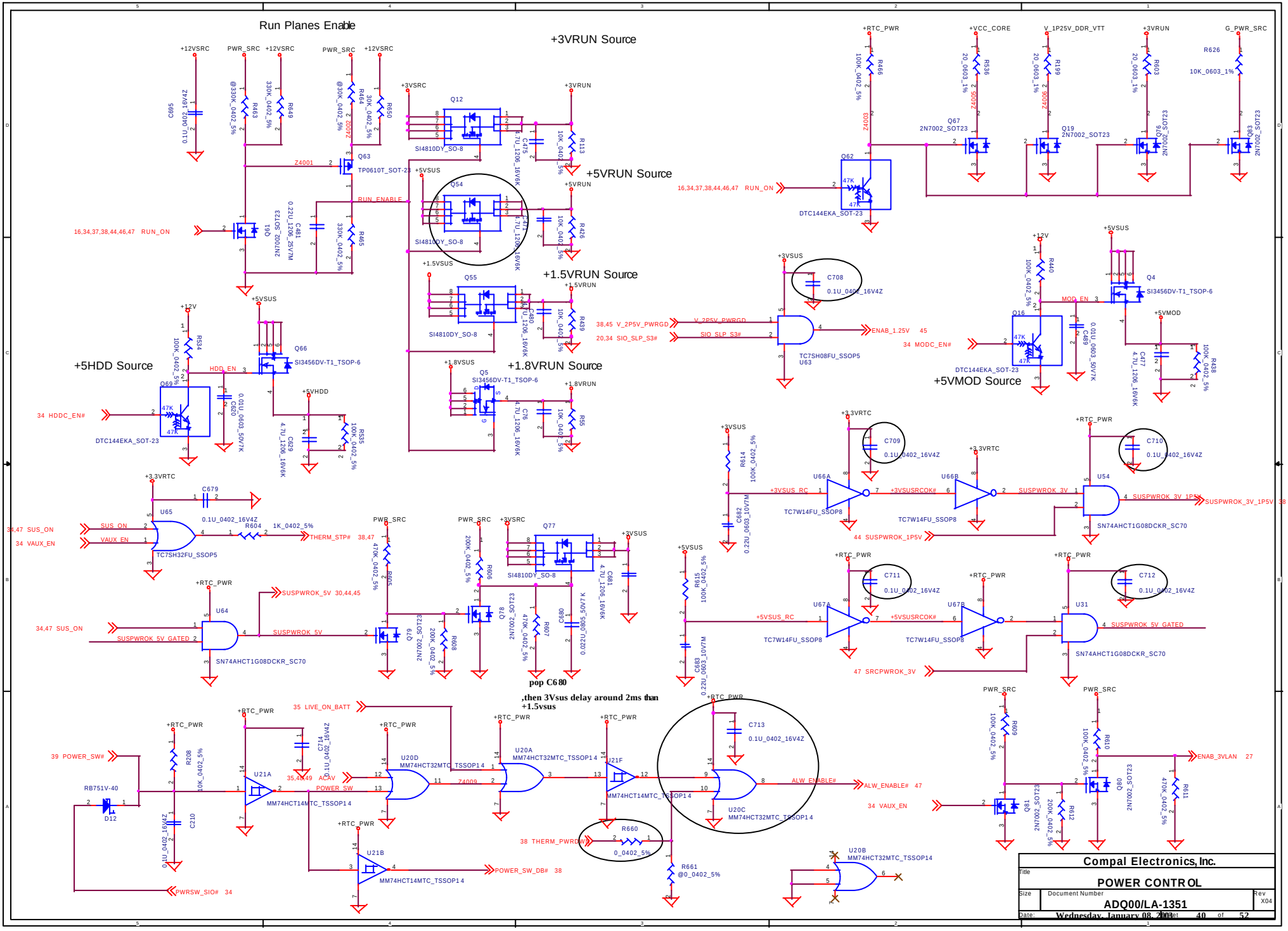
Run Planes Enable
+3VRUN Source
+5VRUN Source
+1.5VRUN Source
+1.8VRUN Source
+5HDD Source
+5VMOD Source
pop C680
,then 3Vsus delay around 2ms than +1.5vsus
Compal Electronics, Inc.
POWER CONTROL
ADQ00/LA-1351
Wednesday, January 08, 2003
40 of 52

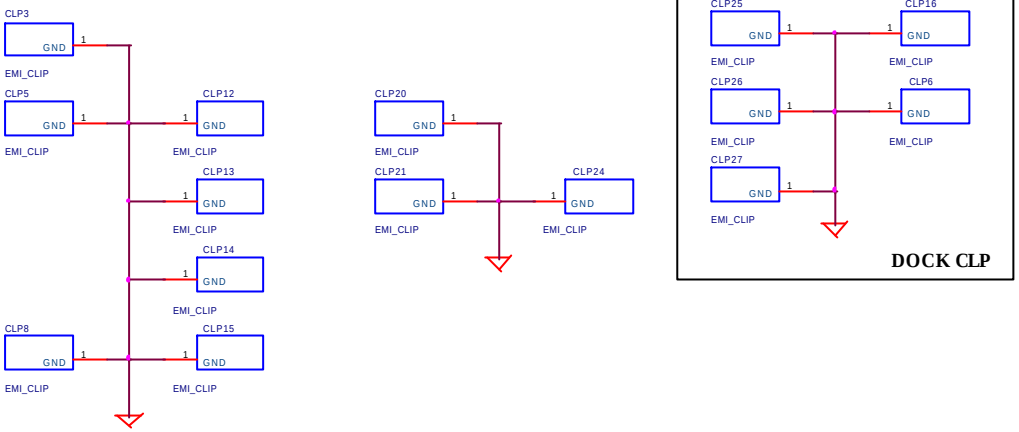

Fiduial Mark

FD1 FIDUCIAL MARK
FD2 FIDUCIAL MARK
FD3 FIDUCIAL MARK
FD4 FIDUCIAL MARK
FD5 FIDUCIAL MARK
FD6 FIDUCIAL MARK
FD7 FIDUCIAL MARK
FD8 FIDUCIAL MARK
FD9 FIDUCIAL MARK
FD10 FIDUCIAL MARK
FD11 FIDUCIAL MARK
FD12 FIDUCIAL MARK
FD13 FIDUCIAL MARK
FD14 FIDUCIAL MARK
FD15 FIDUCIAL MARK
FD16 FIDUCIAL MARK
FD17 FIDUCIAL MARK
FD18 FIDUCIAL MARK

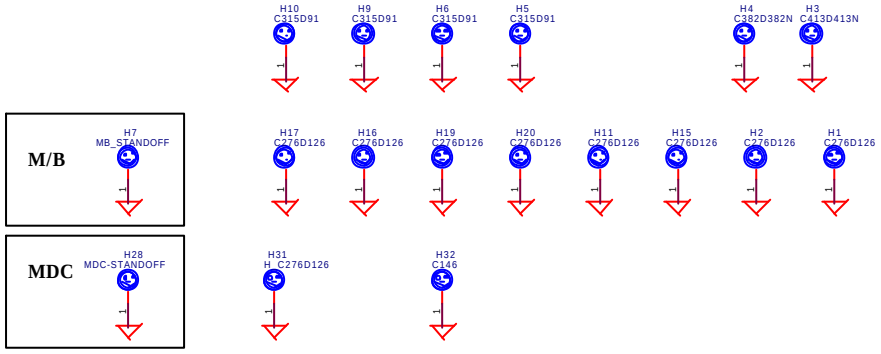

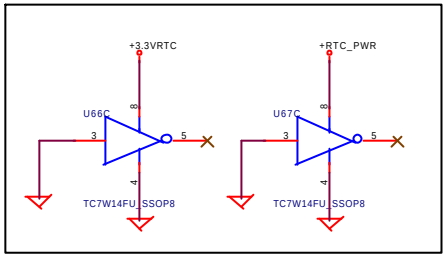

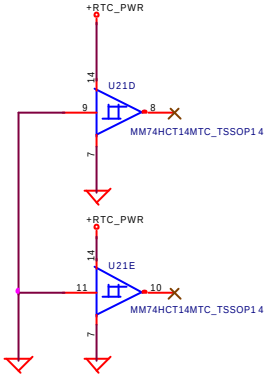

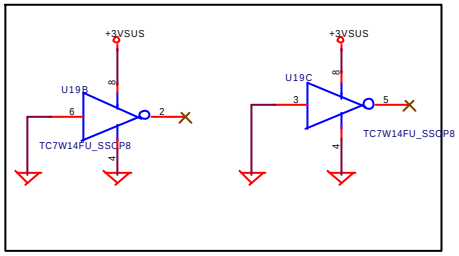

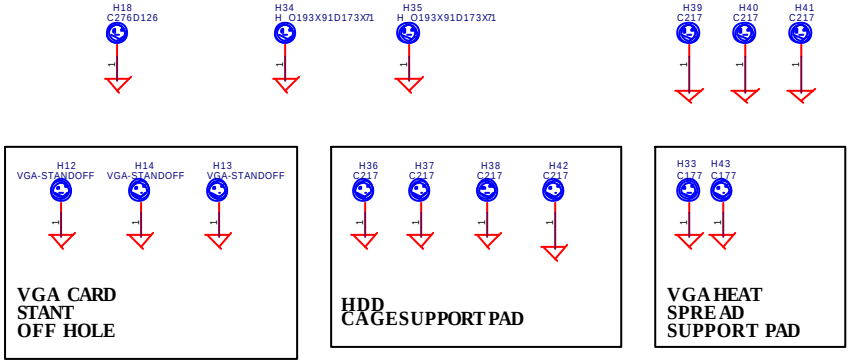

Compal Electronics, Inc.		
Title: PAD and Standoff		
Size	Document Number: ADQ00/LA-1351	Rev: X04
Date: Wednesday, January 08, 2003	Sheet 41 of 52	

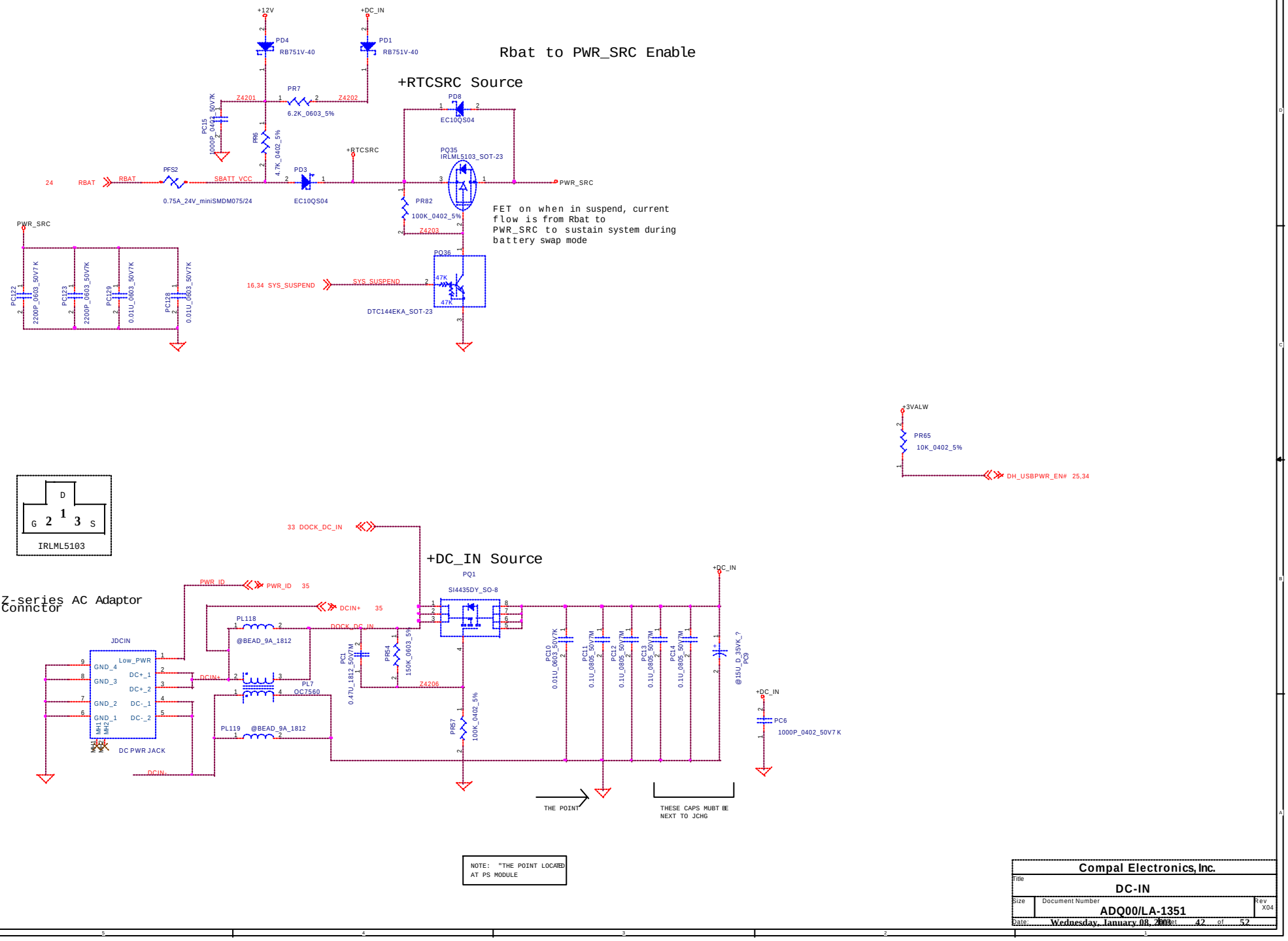

Compal Electronics, Inc.		
Title: DC-IN		
Size	Document Number: ADQ00/LA-1351	Rev: X04
Date: Wednesday, January 08, 2003	Sheet 42 of 52	

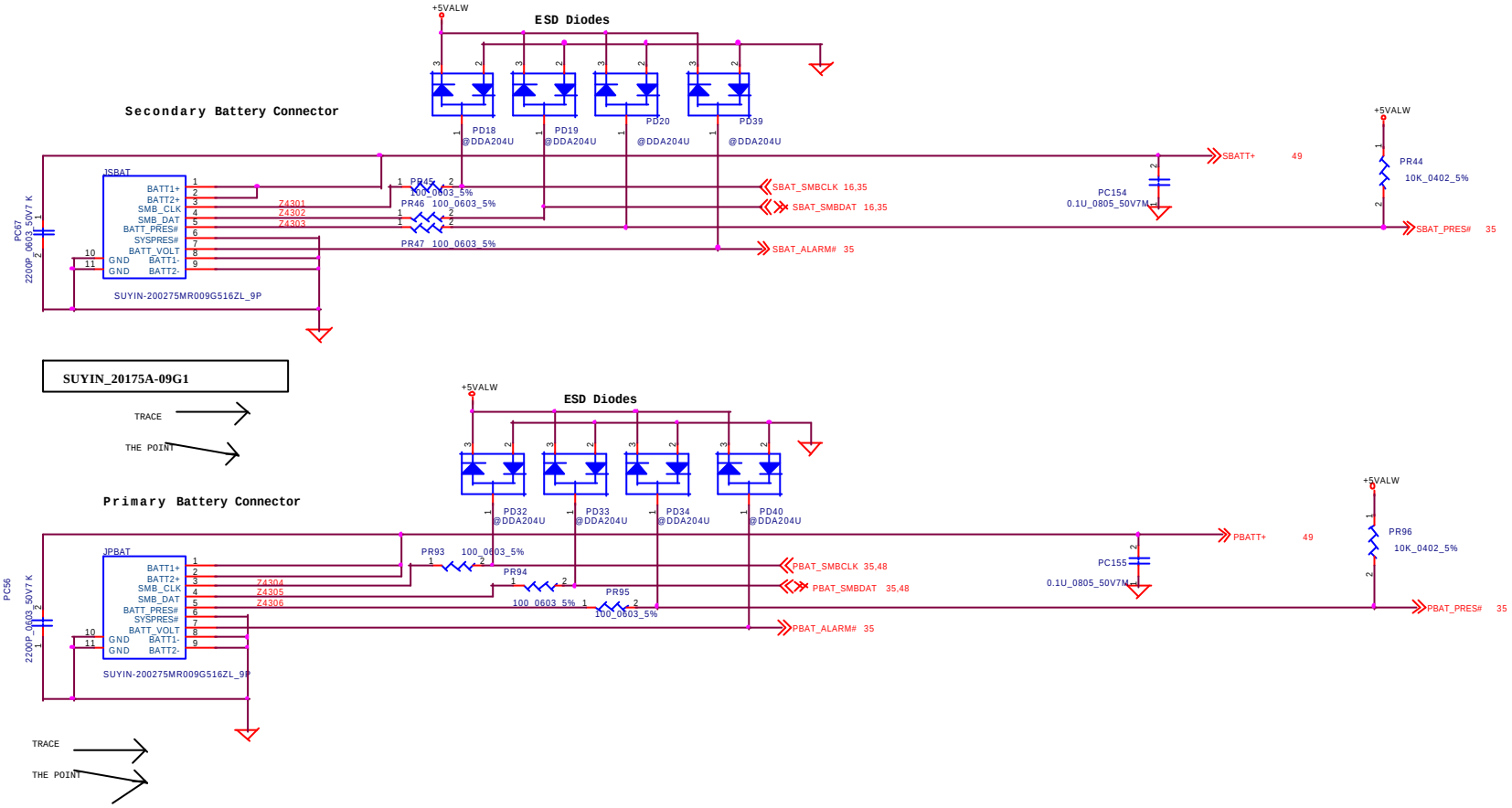

Compal Electronics, Inc.		
Title: Battery CONN.		
Size	Document Number: ADQ00/LA-1351	Rev: X04
Date: Wednesday, January 08, 2003	Sheet 43 of 52	

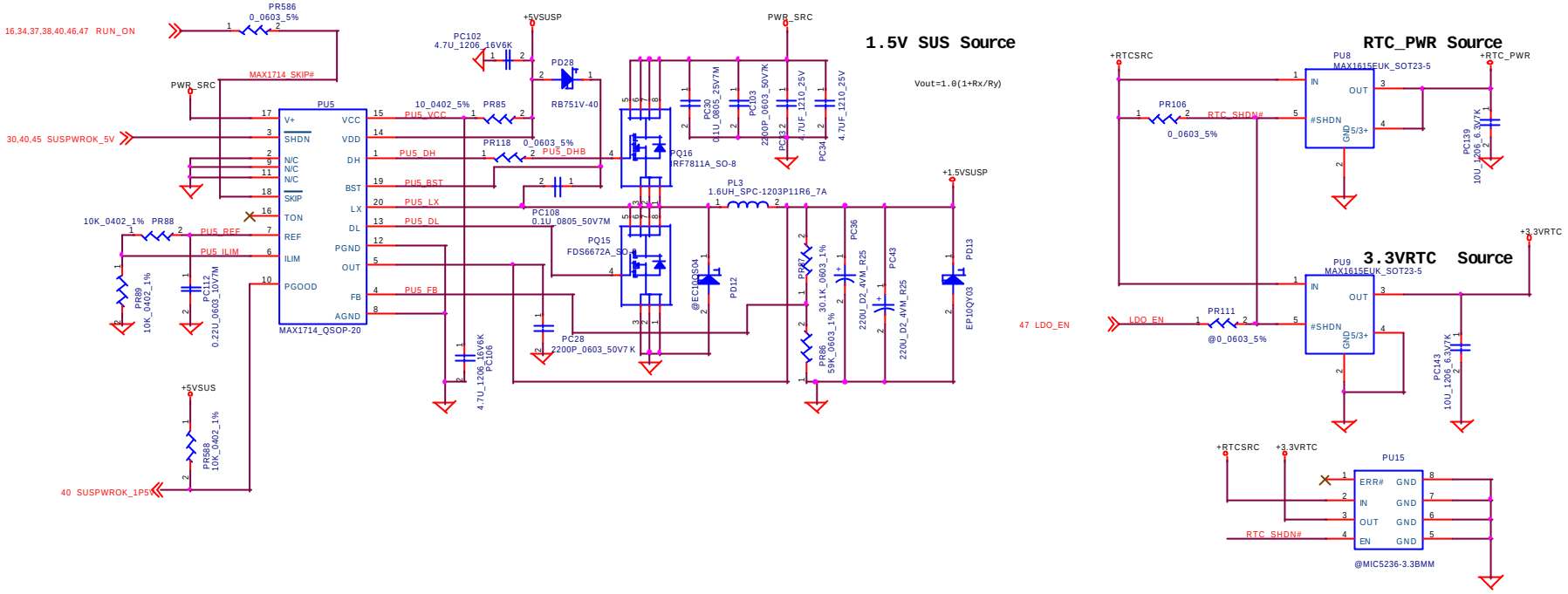

Compal Electronics, Inc.	
Title	1.5V/1.8V
Size	Document Number: ADQ00/LA-1351
Rev	X04
Date: Wednesday, January 08, 2003	Sheet 44 of 52

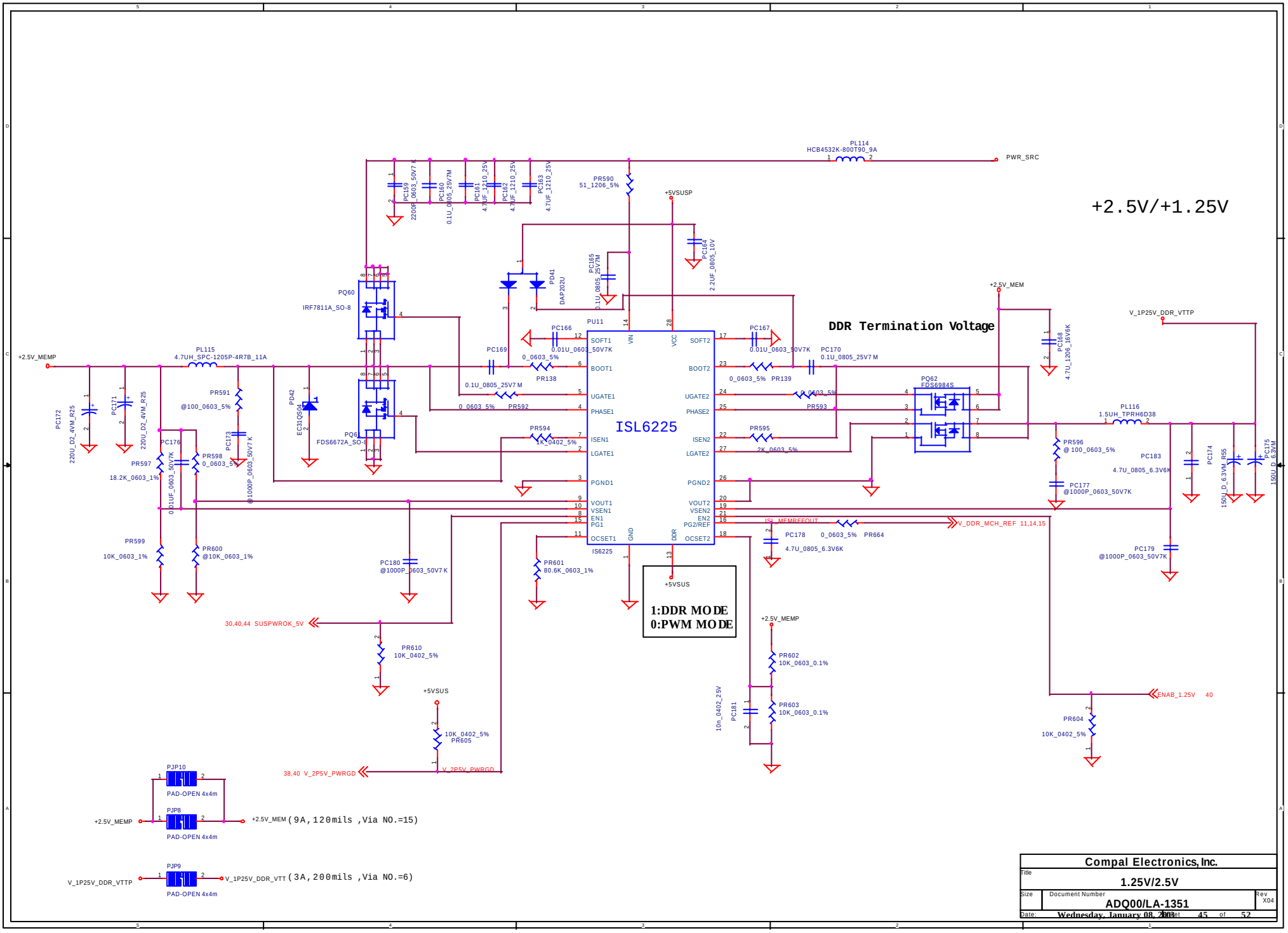

Compal Electronics, Inc.		
Title: 1.25V/2.5V		
Size	Document Number: ADQ00/LA-1351	Rev: X04
Date: Wednesday, January 08, 2003	Sheet 45 of 52	

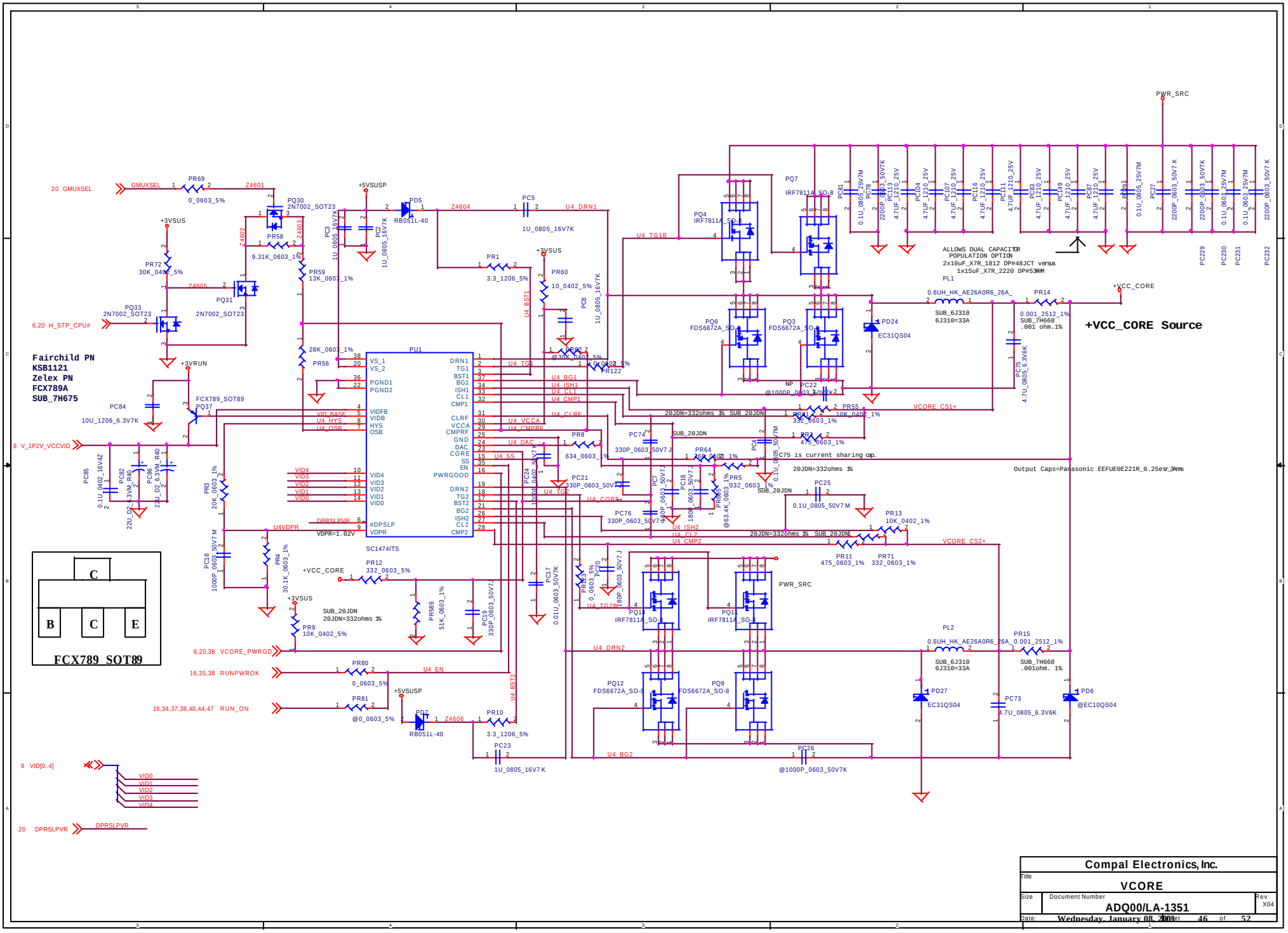

+VCC_CORE Source
Fairchild PN
KSB1121
Zelex PN
FCX789A
SUB_7H675
FCX789_SOT89
PU1
SC1474ITS
PWR_SRC
+VCC_CORE
+5VSUSP
+3VSUS
+3VRUN
ALLOWS DUAL CAPACITOR POPULATION OPTION
2x10uF_X7R_1812 DP#48JCT versus 1x15uF_X7R_2220 DP#53KM
Output Caps=Panasonic EEFUE0E221R_0.25esr_3Arms
20 GMUXSEL
6,20 H_STP_CPU#
8 V_1P2V_VCCVID
6,20,38 VCORE_PWRGD
16,35,38 RUNPWROK
16,34,37,38,40,44,47 RUN_ON
9 VID[0..4]
20 DPRSLPVR
Compal Electronics, Inc.
Title
VCORE
Size
Document Number
ADQ00/LA-1351
Rev
X04
Date: Wednesday, January 08, 2003
Sheet 46 of 52

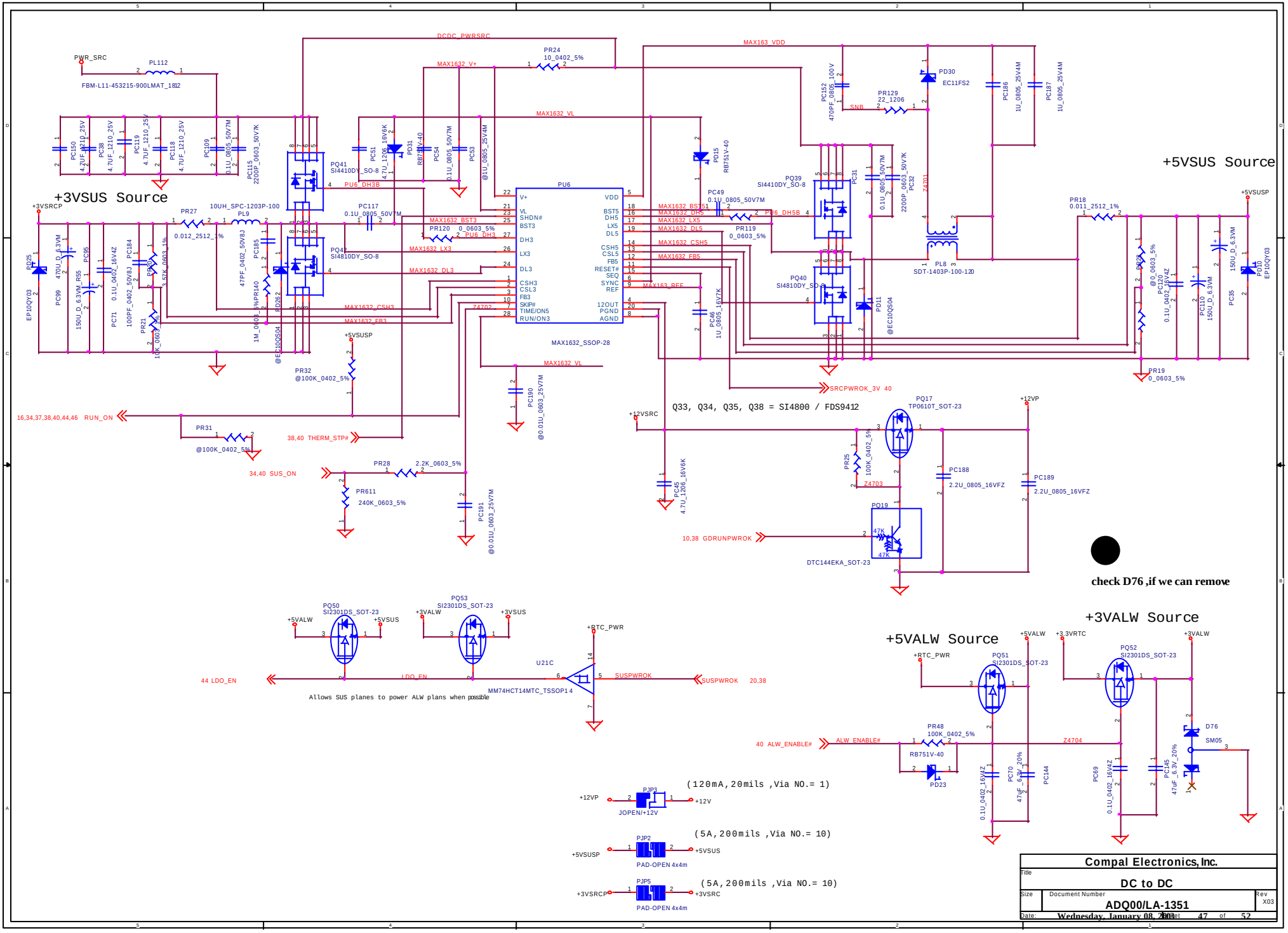
+3VSUS Source
+5VSUS Source
+5VALW Source
+3VALW Source
PU6
MAX1632_SSOP-28
Q33, Q34, Q35, Q38 = SI4800 / FDS9412
check D76 ,if we can remove
Allows SUS planes to power ALW plans when possible
(120mA,20mils ,Via NO.= 1)
(5A,200mils ,Via NO.= 10)
(5A,200mils ,Via NO.= 10)
Compal Electronics,Inc.
DC to DC
ADQ00/LA-1351
Wednesday, January 08, 2003
47 of 52

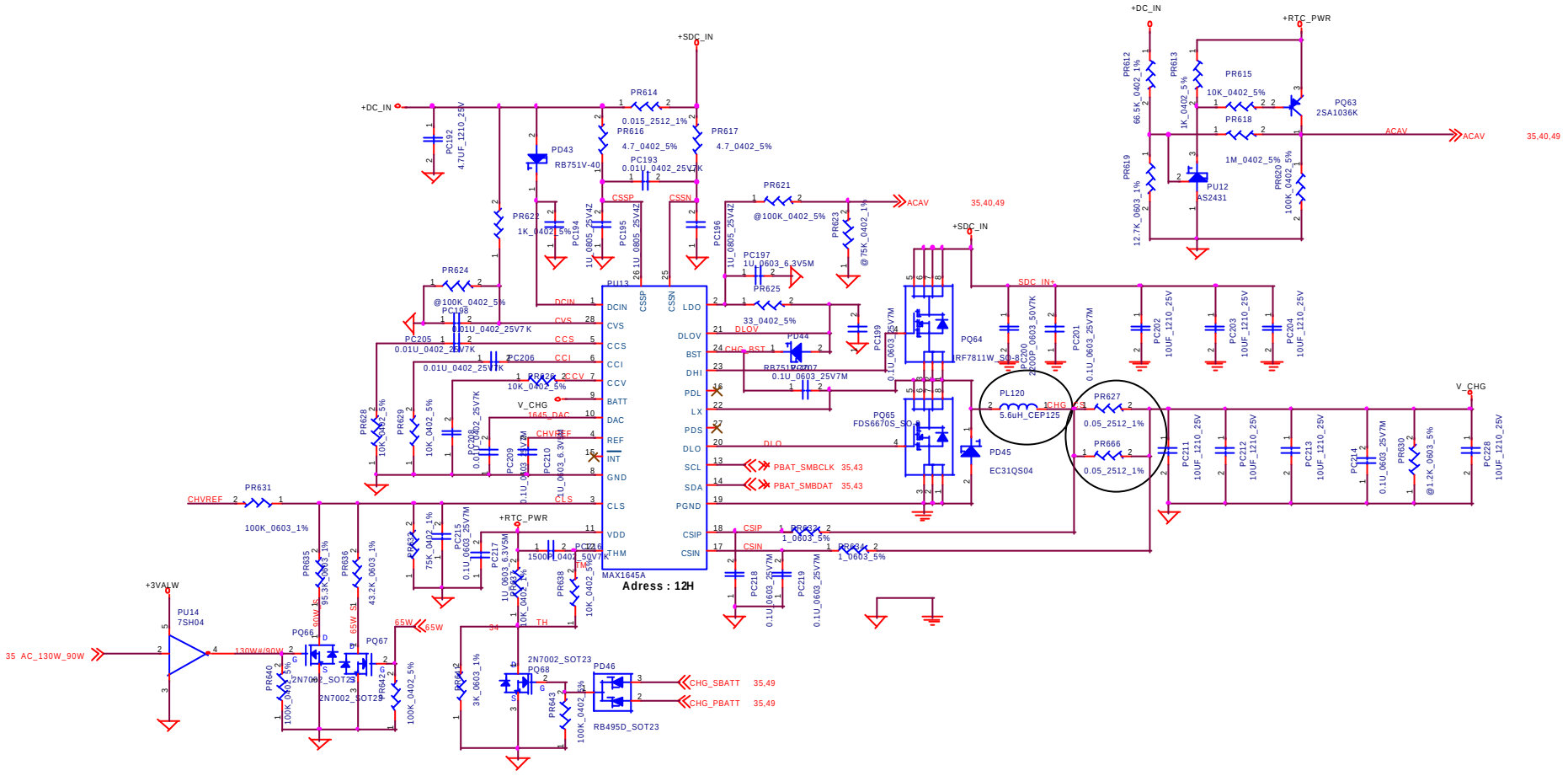

	65W (2.93A)	90W (4.03A)	130W (5.85A)
65W	H	L	L
130W#/90W	L	H	L

Compal Electronics, Inc.		
Title: CHARGER CONTROL		
Size	Document Number: ADQ00/LA-1351	Rev: X04
Date: Wednesday, January 08, 2003	Sheet 48 of 52	

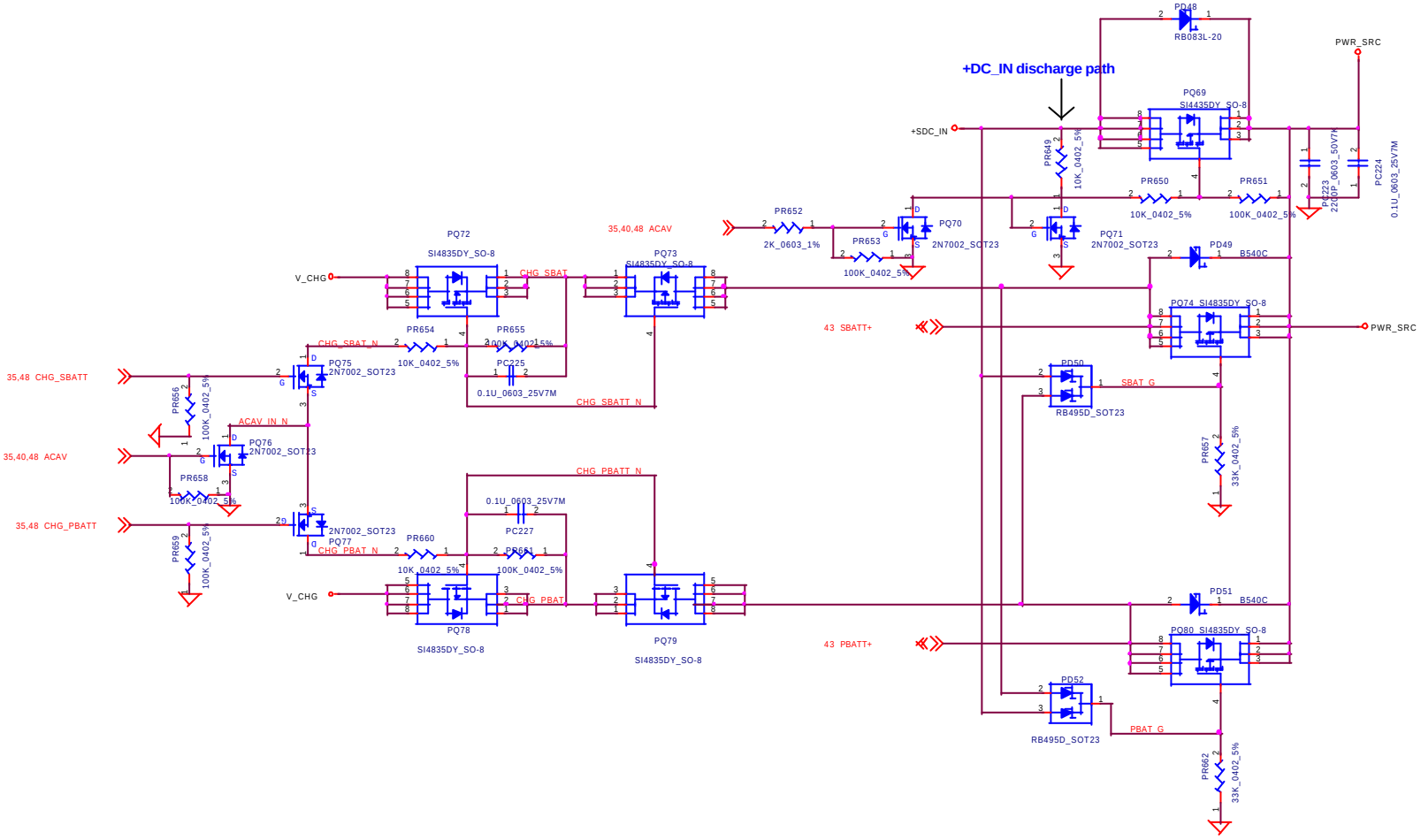

Compal Electronics, Inc.		
Title: CHARGER		
Size	Document Number: ADQ00/LA-1351	Rev: X04
Date: Wednesday, January 08, 2003	Sheet 49 of 52	

THIS PAGE IS ONLY FOR B.O.M. INFORMATION

MY1
MYLAR(ZZZ)
NC
MYLAR_CARDBUS

MY2
MYLAR(ZZZ)
NC
MYLAR_HDD

MY3
MYLAR(ZZZ)
NC
MYLAR_DIMMA

MY4
MYLAR(ZZZ)
NC
MYLAR_DIMMB

MY5
MYLAR(ZZZ)
NC
MYLAR_MINIPCI

MY6
MYLAR(ZZZ)
NC
MYLAR_DOCK_FRAME

MY8
MYLAR(ZZZ)
NC
MYLAR_VCORE

MY9
MYLAR(ZZZ)
NC
MYLAR_BATTERY

TPAD1
THERMPAD
NC
THERMAL_PAD_MCH

TPAD2
THERMPAD
NC
THERMAL_PAD_VGA

TPAD3
THERMPAD
NC
THERMAL_PAD_VRAM

PCB1
BARE PCB
NC
LA-1351_MB

CAGE1
CARDBUSCAGE
NC
?FCI_57996-001(W/SC)

CAGE2
CARDBUSCAGE
NC
#FCI_57996-002(WO/SC)

MY7
MYLAR(ZZZ)
NC
MYLAR_DOCK_HOLE

MY10
MYLAR(ZZZ)
NC
MYLAR_DOCK_HOLE

Z1
Switch Board
NC
Hinge Cover

Z2
Touch Pad
NC
Logic Up

Z3
MDC-RJ11/45
NC
Mg-Frame

Z4
Speaker Module
NC
Logic Low

Z5
BT-CABLE
NC
BlueTooth

Title	Compal Electronic,Inc.	
Size: Custom	Document Number: Touchup	Rev: X04
Date: Wednesday, January 08, 2003	Sheet 50 of 52	

PIR

ITEM	PAGE	REV.	NOTE			
1	9	X025	remove CPU VCCID jumper			
2	19	X025	Change R537 to 1K for PIDEACT# PU			
3	20	X025	remove SIO_LID_EC# signal ,PU ICH4GPIO to+3VRUN			
4	21	X025	change JMOD1 pin8,10,14,16,9,11, to NC,conecct SATA_DET# to pin13	reserve C693,R629,R630 for CD AUDIO termination		
5	25	X025	change Q1,F1,F2,L25 part to meet Doghouse power current requirement	add R639 for USB port 3 power enable,reserve R640		
6	27	X025	add L109, L110 for BCM4401 PCI power for WOL issue			
7	28	X025	add eight 8.2uH inductor to TX/RX line	seperate RN1 to 4 small resisters	Change Q36 to 2N7002	
8	29	X025	remove D11 for TI_SUSPEND#			
9	31	X025	Change JPCI1 pin109 and pin 123 to NC and remove R457,C576			
10	34	X025	add R628 PU to U27 pin D12			
11	35	X025	reserve R634 for TI_SUSPEND#			
12	38	X025	change OTP to discrete solution			
13	40	X025	change Q12 and Q77 to SI4810			
14	42	X025	remove AC LOW PRES circuit			
15	46	X025	change PQ37 to FCX789	remove PC147 change PR1,PR10 to 3.3ohm	add PC229,PC230,PC231,PC232	
16	47	X025	change PR20 to 3.74K			
17	48	X025	addPC228,change C202,PC203, PC204,PC211,PC212,PC213,PC214 to 10uF/25V	Change PL120 to 6uH		
18	27	X03	change 4.7u_0805 to 10u_1206 for cost saving			
19	28	X03	add 8.2nH_0402 inductor on NIC tx/rx paires(L111,L113,L115,L117,L119,L121,L123,L125)	add C171,R651,R652,C697,C696 for Smartcard signal improvement on EMVcertification		
20	30	X03	change bead to 0ohm on dock side for TV &CRT signal			
21	35	X03	add C698 and D75 for ESD protection			
22	38	X03	change OTP from MAX6501 to discrete solution			
23	40	X03	change the SUS to RUN plane control by +12VSRC	add R649,R650		

Title: Compal Electronic,Inc.

Size: Custom | Document Number: PIR | Rev: X04

Date: Wednesday, January 08, 2003 | Sheet 51 of 52

ITEM	PAGE	REV.	NOTE			
24	44	X03	reserve PU15 for +3.3VRTC			
25	47	X03	reserve D76 for ESD protection			
26	48	X03	change PR612 to 66.5K for Adapter voltage margin			
27	49	X03	change PD49,PD51 to B540C			
28	17	X04	change L5,L104,L105 part to be BLM11B600S on CRT	depop C10,C11,C661 for R,G,B, rising time issue	reserve L126 on SPDIF signal for cost saving	
29	20	X04	add RC delay on THRMTRIP# signal for Intruder record	pop R278,R280,depop R281 for board ID		
30	21	X04	change C218 to 0402 package			
31	24	X04	add C703 and change L44 connection			
32	27	X04	Depop L66,C344,C324(5702 need only) for cost saving	add C669 decoupling cap		
33	28	X04	change L111,L113,L115~~~L125 to be 15nH_0402 on TXRX pairs for return loss issue	remove termination resister on 10/100 config(transform changed)	change C1 to 3KV for Hi-pot issue	
34	33	X04	change TV and CRT signal connect to dock directly,remove 0 ohm			
35	35	X04	change ACAV connection to EC by OR gate(for OTP event current linkage issue)	add soft start on PS-ID signal,addR659,R653,Q84,C701,R654,R655	change R618,R564 to 4.7K	
36	36	X04	add K/B scan line serial resister network for EOS			
37	38	X04	add RC delay on THERM_PWRDWN signal	add decoupling CAP on U16,U15,U19		
38	39	X04	remove R214 and LID_CL# signal on JLED1			
39	40	X04	add decoupling on U63,U54,U31,U67,U66,U20	change ALW_ENABLE# connection		
40	48	X04	change PL120 to 5.6uH,and and change Rsense to be two 50 mOhm resister			

Title	Compal Electronic,Inc.	
Size: Custom	Document Number: PIR	Rev: X04
Date: Wednesday, January 08, 2003	Sheet 52 of 52	