Prescott & Springdale Schematic with Capture CIS and Function field

uFCPGA Prescott

2003-03-14

REV: X00-G

Cature library ball out check document

Prescott : Prescott processor Electrial,Mechanical and Thermal Specification Rev0.5 [Check by HW:Henry,Steve]

Springdale(GMCH): Springdale GMCH External Design Specification (EDS) REV1.0 [Check by HW: Henry,Rita]

ICH5: N/A

@ : Depop Component
1@ : Depop on Nimitz(Inspiron)
2@ : Depop on Beijing(Precision)

THIS SHEET OF ENGINEERING DRAWING IS THE PROPRIETARY PROPERTY OF COMPAL ELECTRONICS, INC. AND CONTAINS CONFIDENTIAL AND TRADE SECRET INFORMATION. THIS SHEET MAY NOT BE TRANSFERED FROM THE CUSTODY OF THE COMPETENT DIVISION OF R&D DEPARTMENT EXCEPT AS AUTHORIZED BY COMPAL ELECTRONICS, INC. NEITHER THIS SHEET NOR THE INFORMATION IT CONTAINS MAY BE USED BY OR DISCLOSED TO ANY THIRD PARTY WITHOUT PRIOR WRITTEN CONSENT OF COMPAL ELECTRONICS, INC.

Compal Electronics, Inc.		
Title: Cover Sheet		
Size	Document Number: LA-1711	Rev: X00-G
Date: Tuesday, March 18, 2003	Sheet 1 of 54	

Compal confidential

Block Diagram

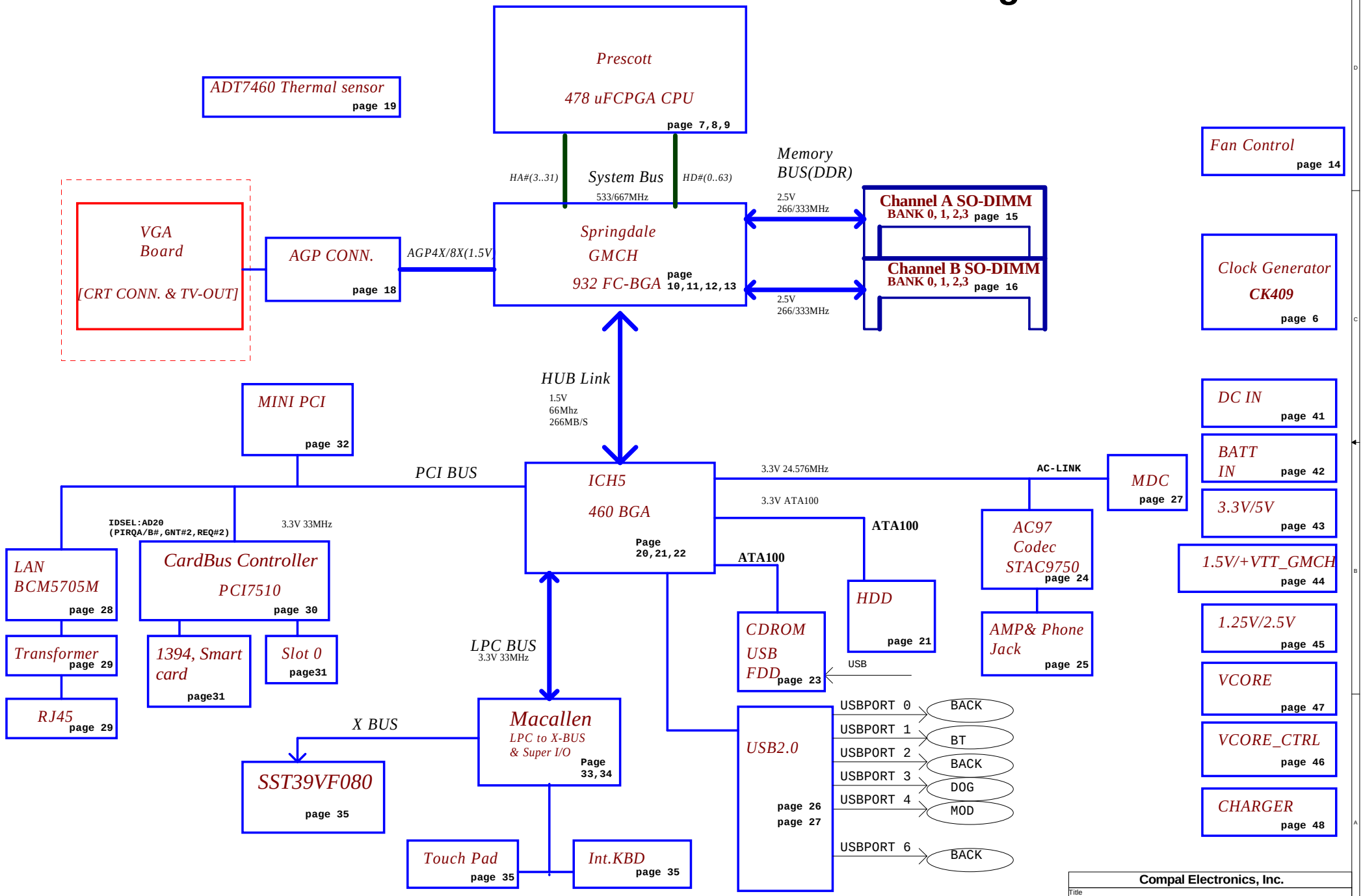

THIS SHEET OF ENGINEERING DRAWING IS THE PROPRIETARY PROPERTY OF COMPAL ELECTRONICS, INC. AND CONTAINS CONFIDENTIAL AND TRADE SECRET INFORMATION. THIS SHEET MAY NOT BE TRANSFERRED FROM THE CUSTODY OF THE COMPETENT DIVISION OF R&D DEPARTMENT EXCEPT AS AUTHORIZED BY COMPAL ELECTRONICS, INC. NEITHER THIS SHEET NOR THE INFORMATION IT CONTAINS MAY BE USED BY OR DISCLOSED TO ANY THIRD PARTY WITHOUT PRIOR WRITTEN CONSENT OF COMPAL ELECTRONICS, INC.

Compal Electronics, Inc.			
Title: Block Diagram			
Size	Document Number: LA-1711		Rev: X00-G
Date: Tuesday, March 18, 2003		Sheet 2 of 54	

PM TABLE

State \ power plane	+3VALW +5VALW	+3VSUS +5VSUS +2.5V_MEM	+3VRUN +5VRUN +1.5VRUN +VCC_CORE +12V +VCCVID V_1P25V_DDR_VTT
S0	ON	ON	ON
S1	ON	ON	ON
S3	ON	ON	OFF
S5 S4/AC	ON	OFF	OFF
S5 S4/AC don't exist	OFF	OFF	OFF

PCI TABLE

PCI DEVICE	IDSEL	REQ#/GNT#	PIRQ
CARD BUS	AD17	1	D,C
LAN	AD16	4	C
MINI PCI	AD19	3	D,B(NP)
VGA			A,B(NP)

Note : "@" means all model depop
"1@" means Nimitz depoped only
"2@" means Beijing depoped only

USB TABLE

USB PORT#	DESTINATION
0	BACK
1	BT
2	BACK
3	DOG
4	MOD
5	Reserved
6	BACK
7	Reserved

Function \ Model	Nimitz	Beijing
Smart Card	YES	YES
LAN	10/100 (4401)	1000 (5705M)
Dog House	YES	YES

Configuration List

BOM Structure		
Function		

THIS SHEET OF ENGINEERING DRAWING IS THE PROPRIETARY PROPERTY OF COMPAL ELECTRONICS, INC. AND CONTAINS CONFIDENTIAL AND TRADE SECRET INFORMATION. THIS SHEET MAY NOT BE TRANSFERRED FROM THE CUSTODY OF THE COMPETENT DIVISION OF R&D DEPARTMENT EXCEPT AS AUTHORIZED BY COMPAL ELECTRONICS, INC. NEITHER THIS SHEET NOR THE INFORMATION IT CONTAINS MAY BE USED BY OR DISCLOSED TO ANY THIRD PARTY WITHOUT PRIOR WRITTEN CONSENT OF COMPAL ELECTRONICS, INC.

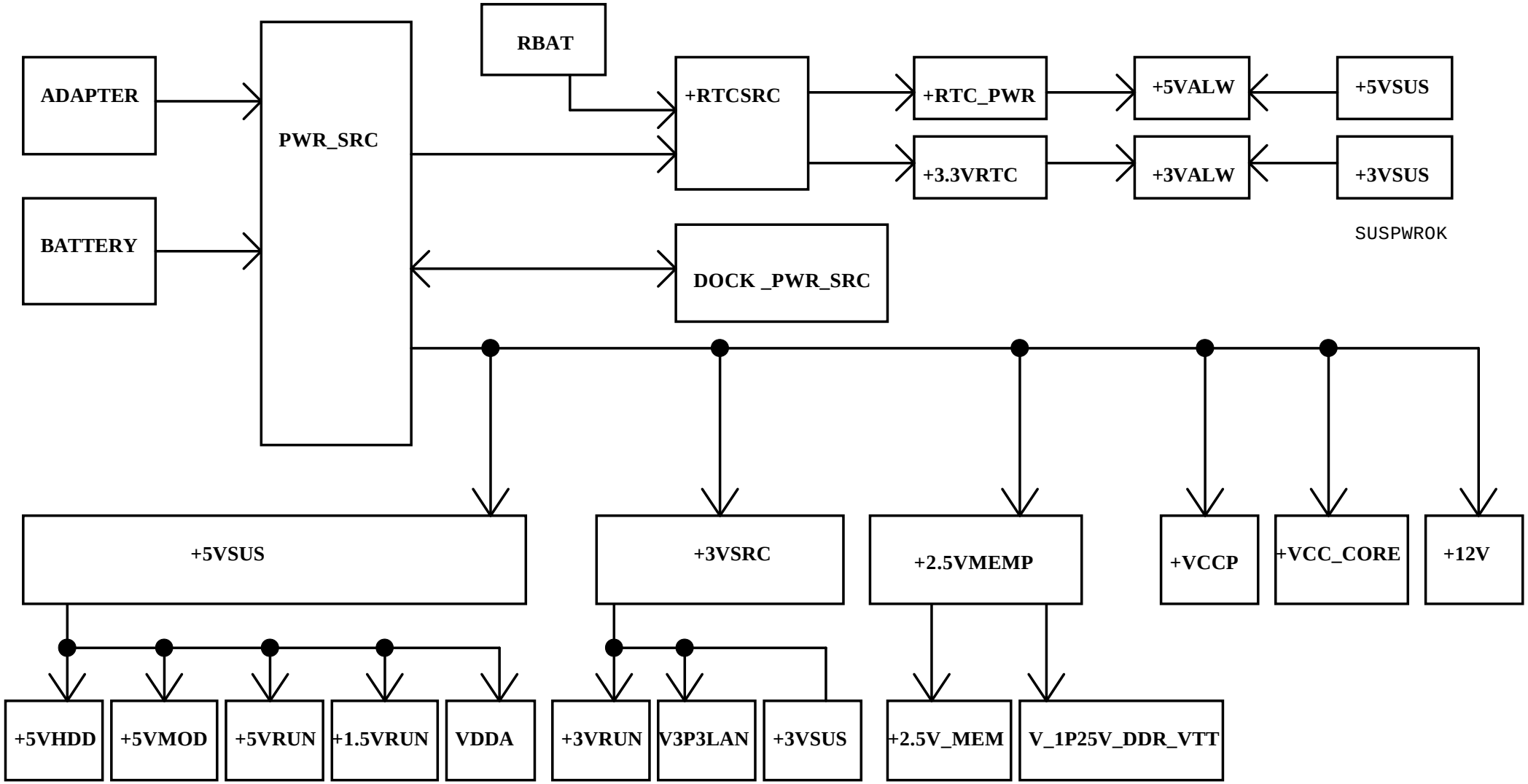

THIS SHEET OF ENGINEERING DRAWING IS THE PROPRIETARY PROPERTY OF COMPAL ELECTRONICS, INC. AND CONTAINS CONFIDENTIAL AND TRADE SECRET INFORMATION. THIS SHEET MAY NOT BE TRANSFERRED FROM THE CUSTODY OF THE COMPETENT DIVISION OF R&D DEPARTMENT EXCEPT AS AUTHORIZED BY COMPAL ELECTRONICS, INC. NEITHER THIS SHEET NOR THE INFORMATION IT CONTAINS MAY BE USED BY OR DISCLOSED TO ANY THIRD PARTY WITHOUT PRIOR WRITTEN CONSENT OF COMPAL ELECTRONICS, INC.

Compal Electronics, Inc.		
Title: Power Rail		
Size	Document Number: LA-1711	Rev: X00-G
Date: Tuesday, March 18, 2003	Sheet 4 of 54	

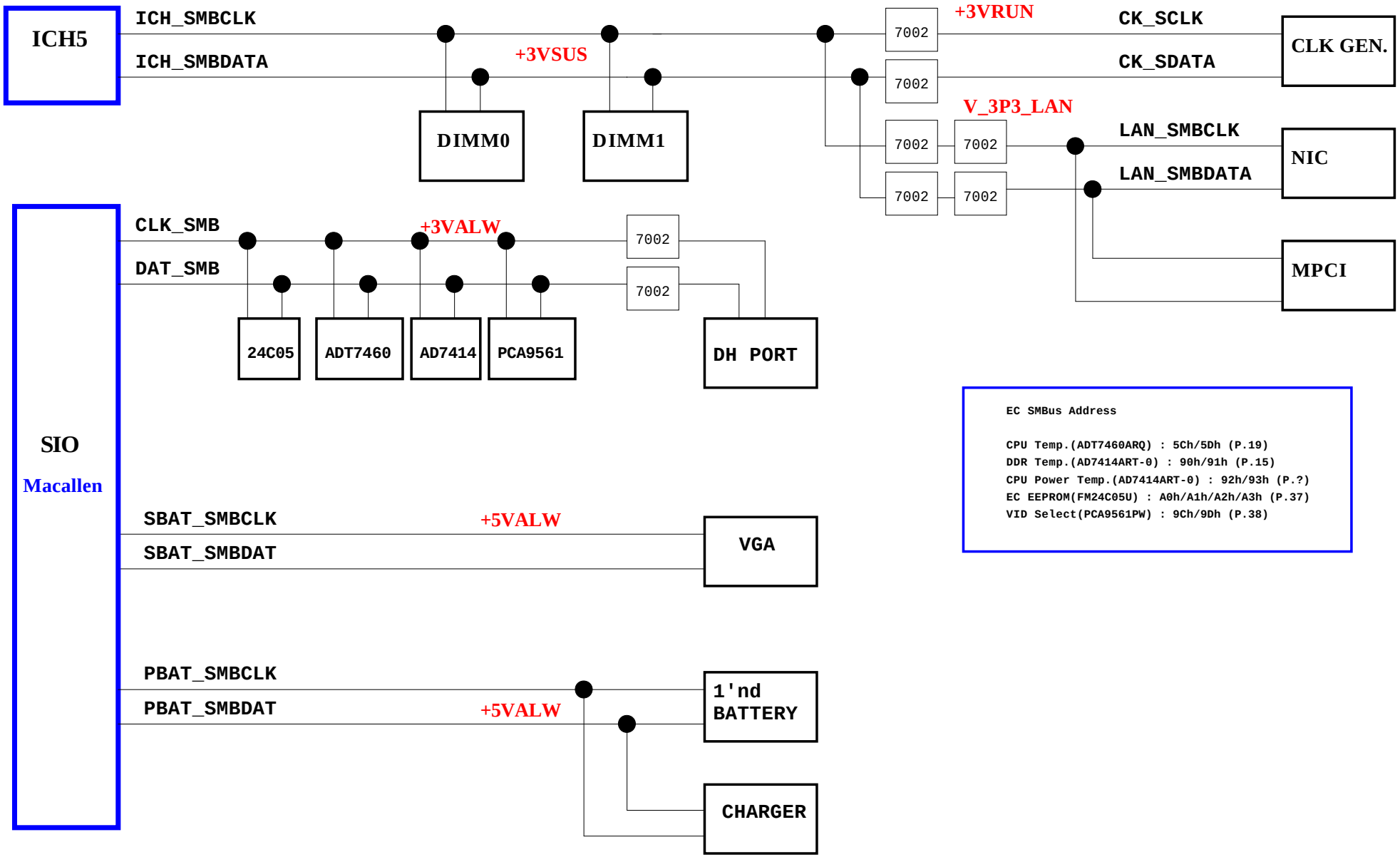

EC SMBus Address

CPU Temp.(ADT7460ARQ) : 5Ch/5Dh (P.19)
DDR Temp.(AD7414ART-0) : 90h/91h (P.15)
CPU Power Temp.(AD7414ART-0) : 92h/93h (P.?)
EC EEPROM(FM24C05U) : A0h/A1h/A2h/A3h (P.37)
VID Select(PCA9561PW) : 9Ch/9Dh (P.38)

THIS SHEET OF ENGINEERING DRAWING IS THE PROPRIETARY PROPERTY OF COMPAL ELECTRONICS, INC. AND CONTAINS CONFIDENTIAL AND TRADE SECRET INFORMATION. THIS SHEET MAY NOT BE TRANSFERRED FROM THE CUSTODY OF THE COMPETENT DIVISION OF R&D DEPARTMENT EXCEPT AS AUTHORIZED BY COMPAL ELECTRONICS, INC. NEITHER THIS SHEET NOR THE INFORMATION IT CONTAINS MAY BE USED BY OR DISCLOSED TO ANY THIRD PARTY WITHOUT PRIOR WRITTEN CONSENT OF COMPAL ELECTRONICS, INC.

Compal Electronics, Inc.		
Title: SMBUS TOPOLOGY		
Size	Document Number: LA-1711	Rev: X00-G
Date: Tuesday, March 18, 2003	Sheet 5 of 54	

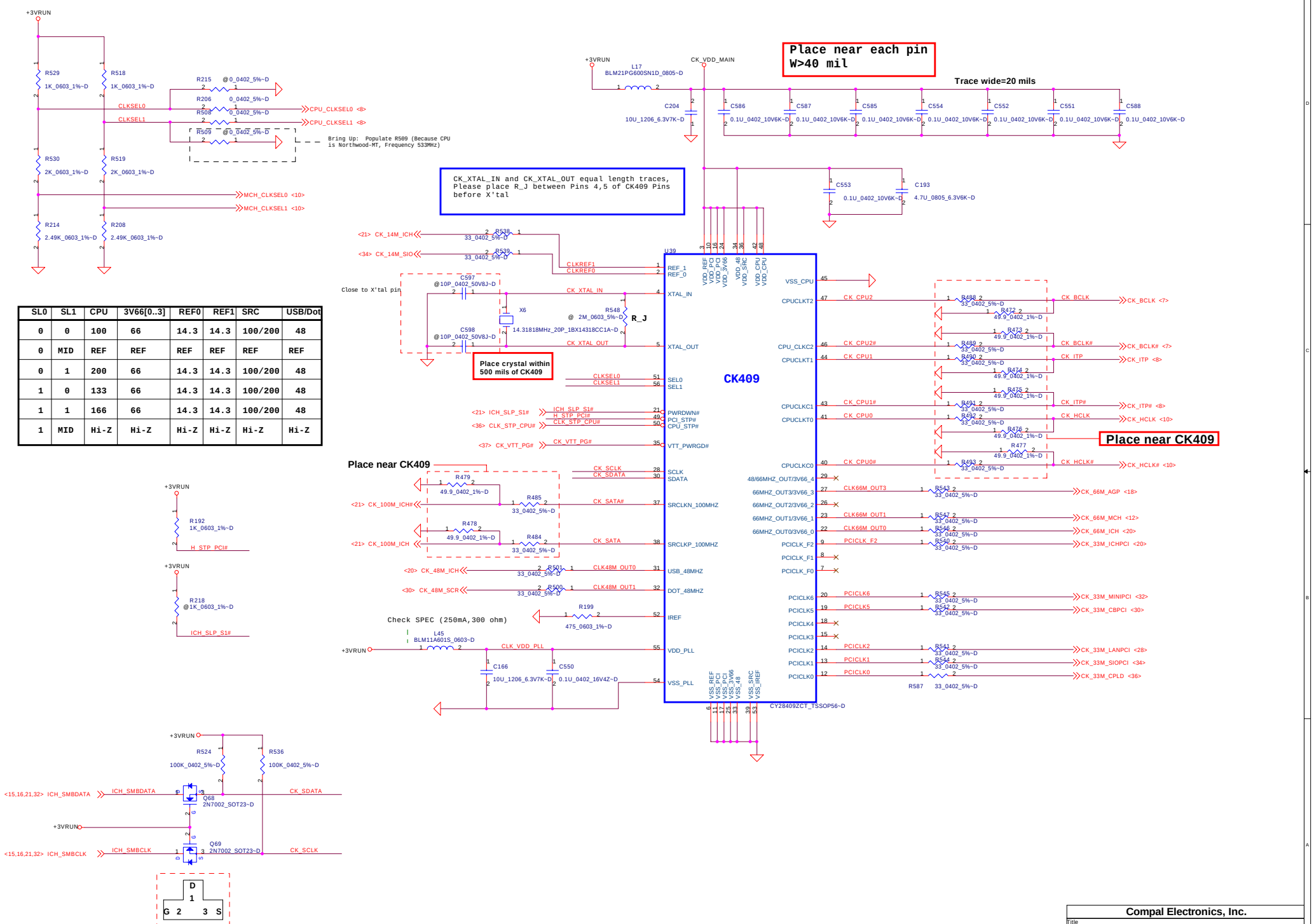

SL0	SL1	CPU	3V66[0..3]	REF0	REF1	SRC	USB/Dot
0	0	100	66	14.3	14.3	100/200	48
0	MID	REF	REF	REF	REF	REF	REF
0	1	200	66	14.3	14.3	100/200	48
1	0	133	66	14.3	14.3	100/200	48
1	1	166	66	14.3	14.3	100/200	48
1	MID	Hi-Z	Hi-Z	Hi-Z	Hi-Z	Hi-Z	Hi-Z

THIS SHEET OF ENGINEERING DRAWING IS THE PROPRIETARY PROPERTY OF COMPAL ELECTRONICS, INC. AND CONTAINS CONFIDENTIAL AND TRADE SECRET INFORMATION. THIS SHEET MAY NOT BE TRANSFERED FROM THE CUSTODY OF THE COMPETENT DIVISION OF R&D DEPARTMENT EXCEPT AS AUTHORIZED BY COMPAL ELECTRONICS, INC. NEITHER THIS SHEET NOR THE INFORMATION IT CONTAINS MAY BE USED BY OR DISCLOSED TO ANY THIRD PARTY WITHOUT PRIOR WRITTEN CONSENT OF COMPAL ELECTRONICS, INC.

Compal Electronics, Inc.

Title: Clock Generator

Size | Document Number: LA-1711 | Rev: X00-G

Date: Tuesday, March 18, 2003 | Sheet 6 of 54

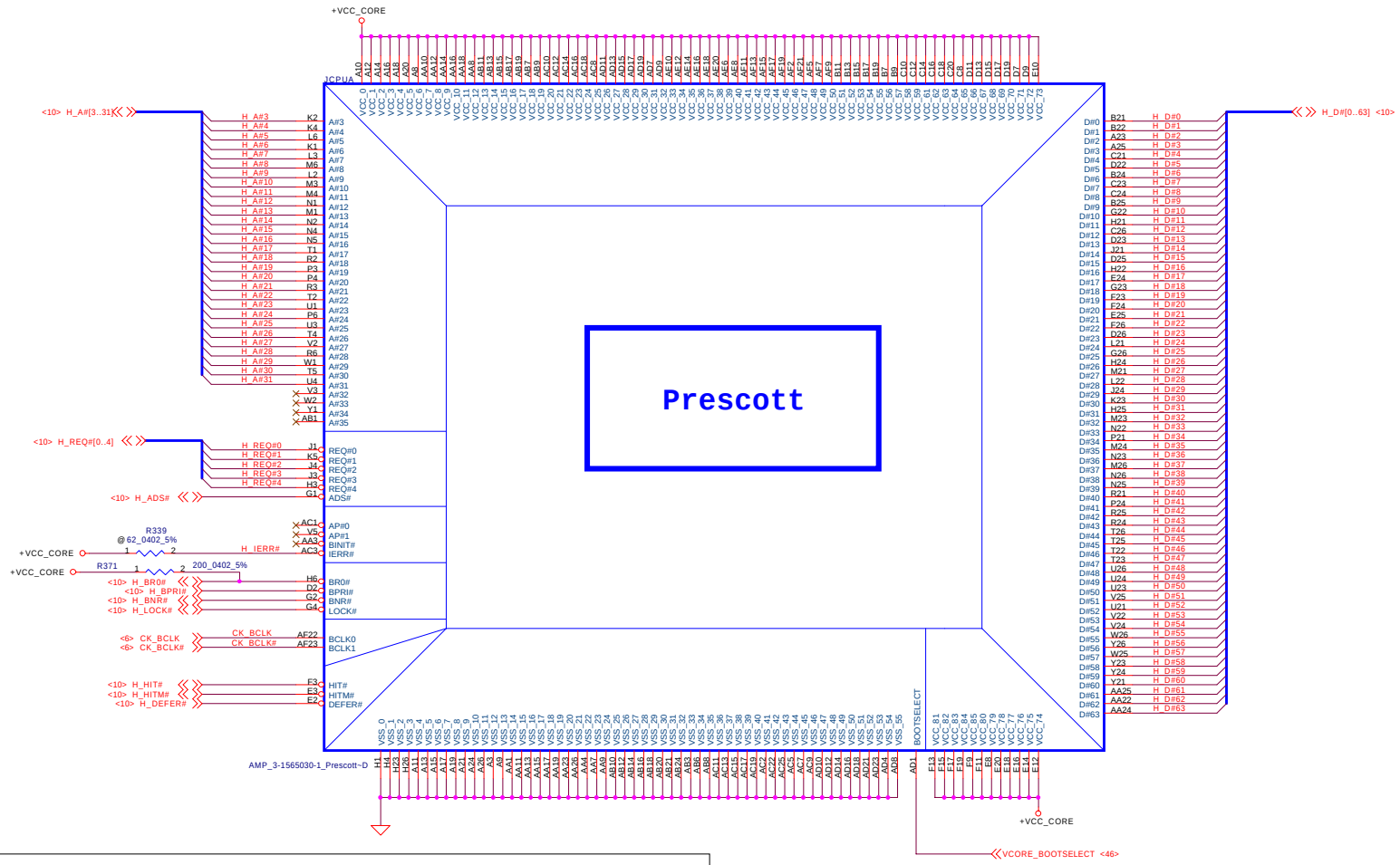

Reference Intel document
Desktop P4 Spec.: 10988 P4 0.13u 512KB L2 EMTS Rev.2.0
Desktop Prescott Spec.: 11910 Prescott EMTS Rev.0.5

Pin number	Northwood Pin name	Comment	Prescott Pin name	Comment	Northwood MT Pin name	Comment	Northwood	Prescott	Northwood MT
A6	TESTHI11	Pull-up 200ohm to +VCC_CORE	TESTHI11	Pull-up 62ohm to +VCC_CORE	GHI	Connect to PLD CPUPREF through 0ohm	Pop	Pop	Pop
B6	FERR#	Pull-up 62ohm to +VCC_CORE	FERR#/PBE#	Pull-up 62ohm to +VCC_CORE	FERR#	Pull-up 62ohm to +VCC_CORE	Pop	Pop	Pop
AA20	ITPCLKOUT0	Pull-up56ohm to +VCC_CORE	TESTHI6	Pull-up 62ohm to +VCC_CORE	ITPCLKOUT0	Pull-up56ohm to +VCC_CORE	Pop	Pop	Pop
AB22	ITPCLKOUT1	Pull-up 56ohm to +VCC_CORE	TESTHI7	Pull-up 62ohm to +VCC_CORE	ITPCLKOUT1	Pull-up 56ohm to +VCC_CORE	Pop	Pop	Pop
AD2	NC	float	VIDPWRGD	Pull-up 2.43K ohm to +VCCVID	NC	float	Depop	Pop	Depop
AD3	NC	float	VID5	Pull-up1Kohm to +3VRUN & connect to PWRIC	NC	float	Depop	Pop	Depop
AF3	NC	float	VCCVIDLB	Connect to +VCCVID	NC	float	Depop	Pop	Depop
AD20	VCCA	Connect to CPU Filter	VCCIOPLL	Connect to CPU Filter	VCCA	Connect to CPU Filter			
AF23	VCCIOPLL	Connect to CPU Filter	VCCA	Connect to CPU Filter	VCCIOPLL	Connect to CPU Filter			
AE26	VSS	Connect to GND	OPTIMIZED/ COMPAT#	float	VSS	Connect to GND	Pop	Depop	Pop
AD25	TESTHI12	Pull-up 200ohm to +VCC_CORE	TESTHI12	Pull-up 62ohm to +VCC_CORE	DPSLP	Connect to PLD through 0ohm	Pop	Pop	Pop

Note: AD2,AD3 pop(bring up)

THIS SHEET OF ENGINEERING DRAWING IS THE PROPRIETARY PROPERTY OF COMPAL ELECTRONICS, INC. AND CONTAINS CONFIDENTIAL AND TRADE SECRET INFORMATION. THIS SHEET MAY NOT BE TRANSFERED FROM THE CUSTODY OF THE COMPETENT DIVISION OF R&D DEPARTMENT EXCEPT AS AUTHORIZED BY COMPAL ELECTRONICS, INC. NEITHER THIS SHEET NOR THE INFORMATION IT CONTAINS MAY BE USED BY OR DISCLOSED TO ANY THIRD PARTY WITHOUT PRIOR WRITTEN CONSENT OF COMPAL ELECTRONICS, INC.

Compal Electronics, Inc.

Title: **Prescott Processor in uFCPGA478**

Size: C | Document Number: **LA-1711** | Rev: X00-G

Date: Tuesday, March 18, 2003 | Sheet 7 of 54

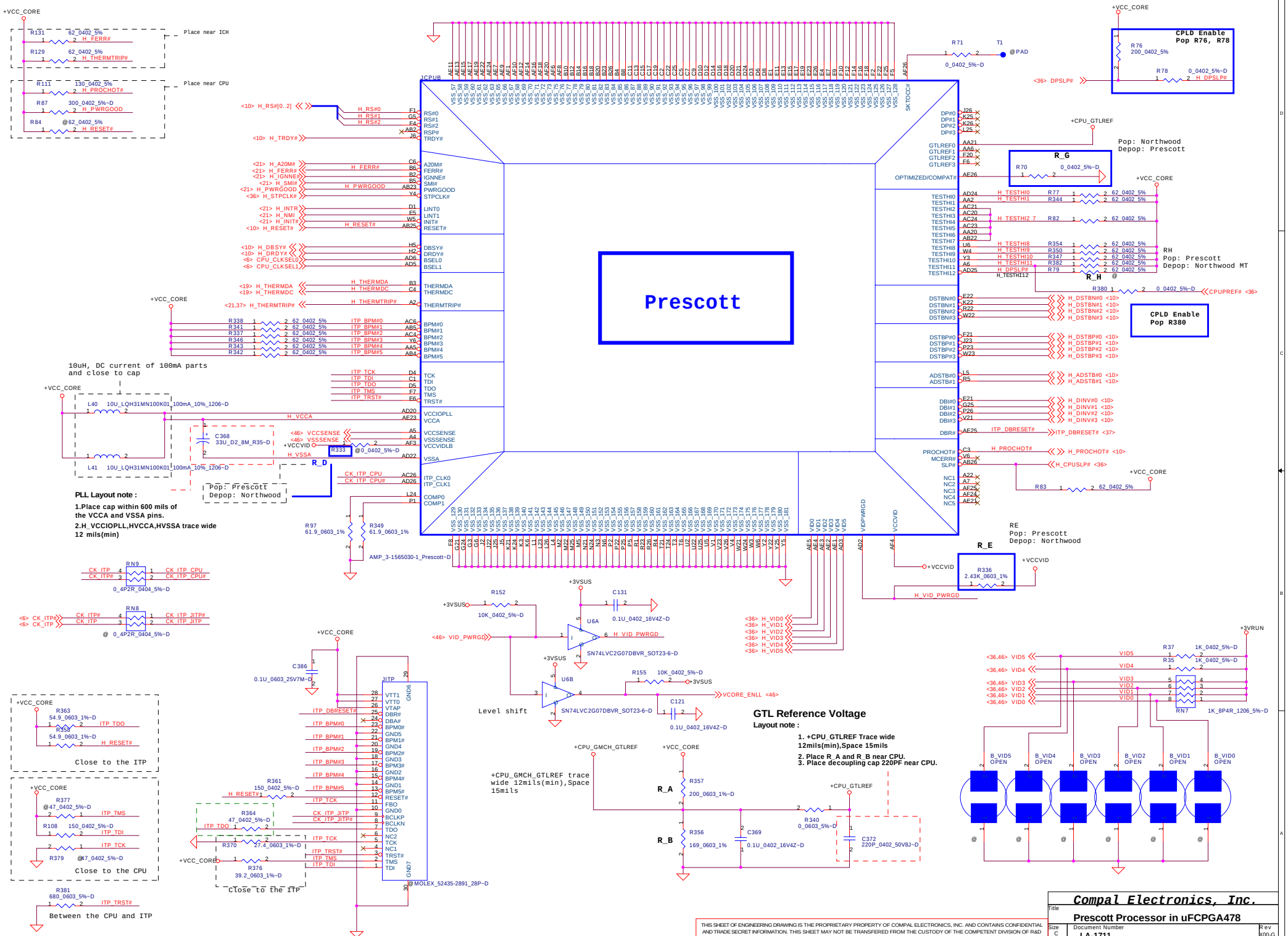

THIS SHEET OF ENGINEERING DRAWING IS THE PROPRIETARY PROPERTY OF COMPAL ELECTRONICS, INC. AND CONTAINS CONFIDENTIAL AND TRADE SECRET INFORMATION. THIS SHEET MAY NOT BE TRANSFERED FROM THE CUSTODY OF THE COMPETENT DIVISION OF R&D DEPARTMENT EXCEPT AS AUTHORIZED BY COMPAL ELECTRONICS, INC. NEITHER THIS SHEET NOR THE INFORMATION IT CONTAINS MAY BE USED BY OR DISCLOSED TO ANY THIRD PARTY WITHOUT PRIOR WRITTEN CONSENT OF COMPAL ELECTRONICS, INC.

Compal Electronics, Inc.			
Title: Prescott Processor in uFCPGA478			
Size: C	Document Number: LA-1711	Rev: X00-G	
Date: Tuesday, March 18, 2003	Sheet 8 of 54		

Place 11 North of Socket(Stuff 6)

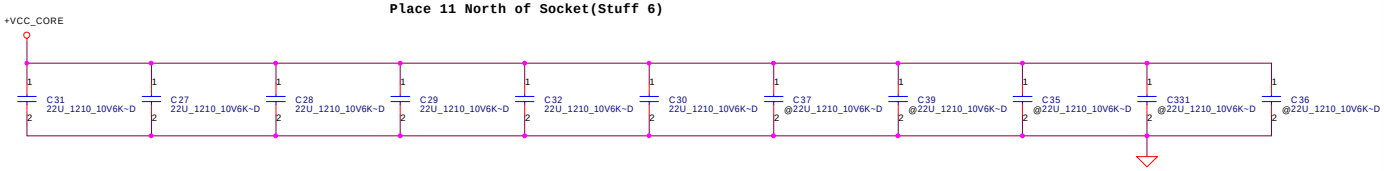

22uF depop reference
Springdale Chipset Platform Design Guide Rev1.11(12474)

Place 12 Inside Socket(Stuff all)

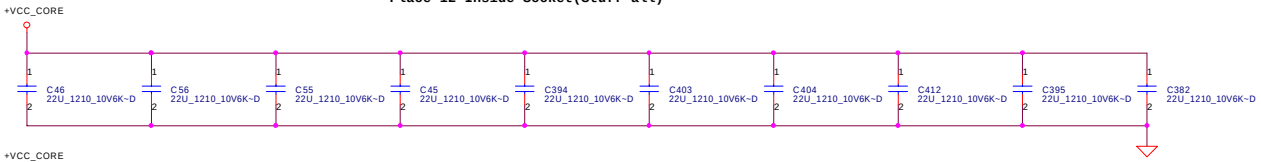

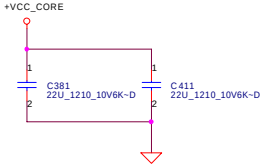

Place 9 South of Socket(Unstuff all)

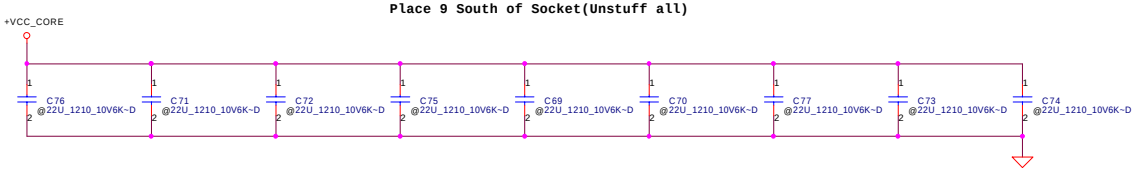

470uF _ERS10m ohm* 15, ESR=0.5m ohm

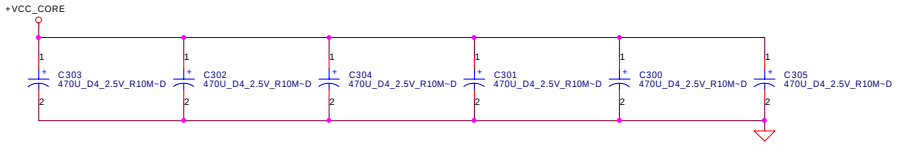

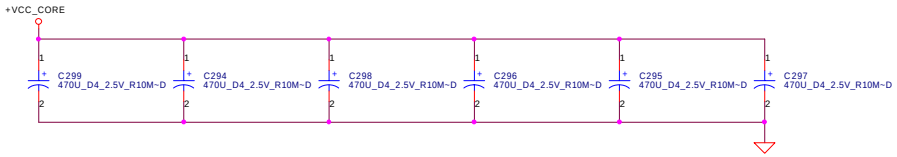

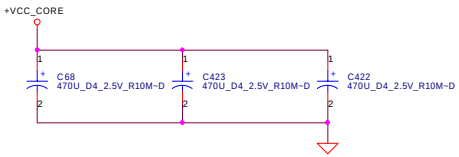

Decoupling Reference Document:
Springdale Chipset Platform Design guide Rev1.11 (12474)page239

Decoupling Reference Requirement:
560uF Polymer, ESR:5m ohm(each) * 10
22uF X5R * 32

THIS SHEET OF ENGINEERING DRAWING IS THE PROPRIETARY PROPERTY OF COMPAL ELECTRONICS, INC. AND CONTAINS CONFIDENTIAL AND TRADE SECRET INFORMATION. THIS SHEET MAY NOT BE TRANSFERED FROM THE CUSTODY OF THE COMPETENT DIVISION OF R&D DEPARTMENT EXCEPT AS AUTHORIZED BY COMPAL ELECTRONICS, INC. NEITHER THIS SHEET NOR THE INFORMATION IT CONTAINS MAY BE USED BY OR DISCLOSED TO ANY THIRD PARTY WITHOUT PRIOR WRITTEN CONSENT OF COMPAL ELECTRONICS, INC.

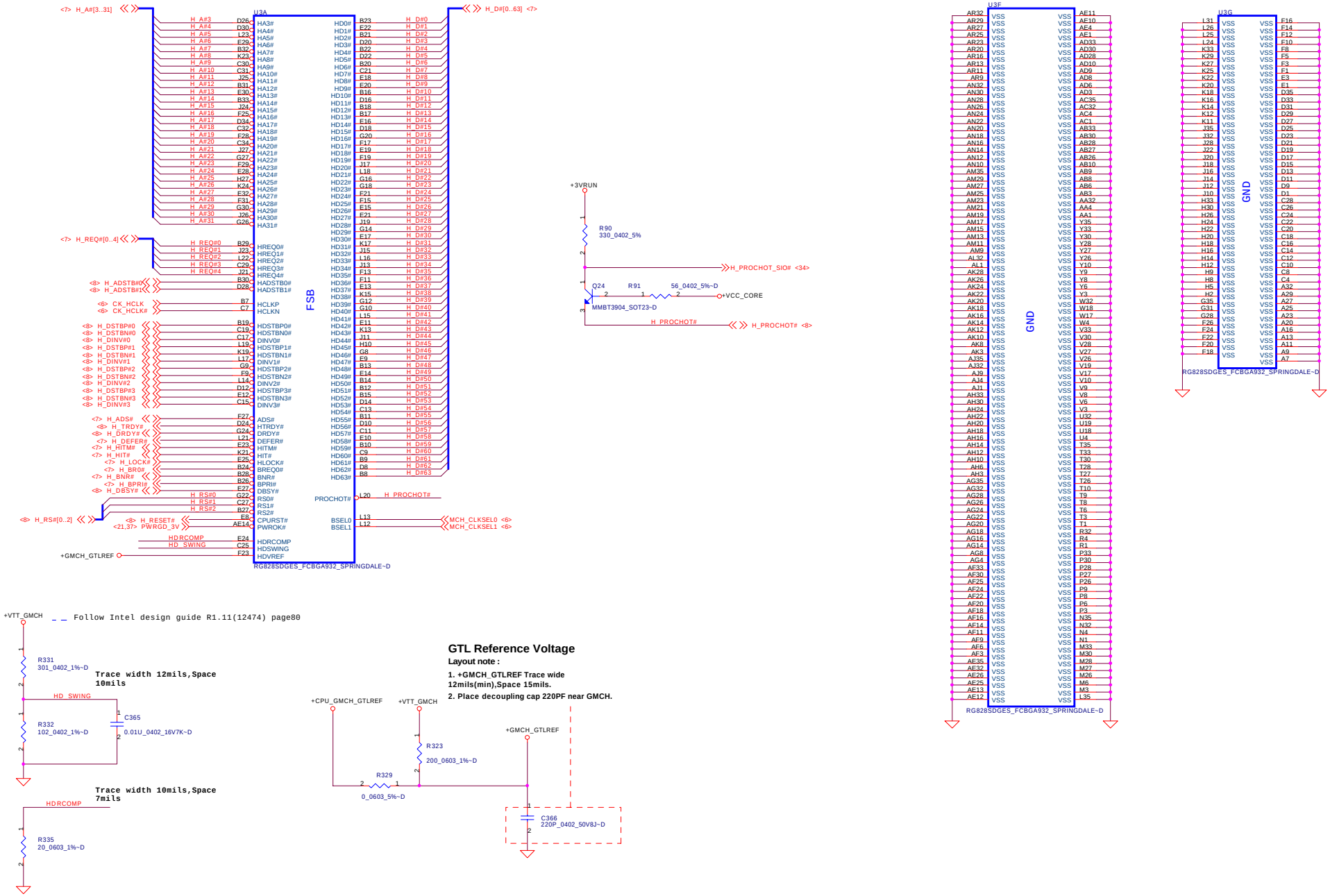

THIS SHEET OF ENGINEERING DRAWING IS THE PROPRIETARY PROPERTY OF COMPAL ELECTRONICS, INC. AND CONTAINS CONFIDENTIAL AND TRADE SECRET INFORMATION. THIS SHEET MAY NOT BE TRANSFERED FROM THE CUSTODY OF THE COMPETENT DIVISION OF R&D DEPARTMENT EXCEPT AS AUTHORIZED BY COMPAL ELECTRONICS, INC. NEITHER THIS SHEET NOR THE INFORMATION IT CONTAINS MAY BE USED BY OR DISCLOSED TO ANY THIRD PARTY WITHOUT PRIOR WRITTEN CONSENT OF COMPAL ELECTRONICS, INC.

Compal Electronics, Inc.			
Title	Springdale-Host/GND		
Size C	Document Number LA-1711		Rev X00-G
Date: Tuesday, March 18, 2003	Sheet 10 of 54		

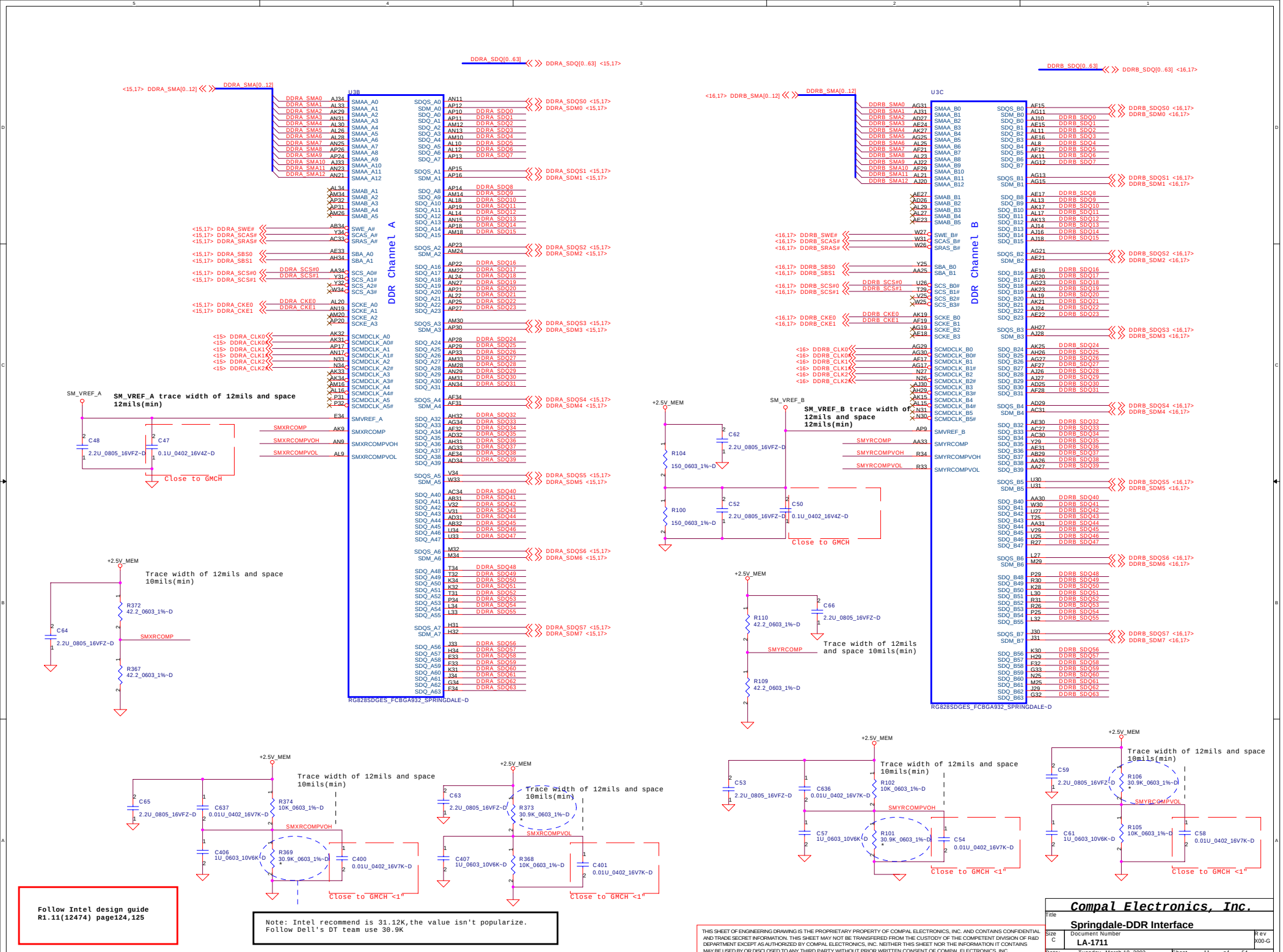

THIS SHEET OF ENGINEERING DRAWING IS THE PROPRIETARY PROPERTY OF COMPAL ELECTRONICS, INC. AND CONTAINS CONFIDENTIAL AND TRADE SECRET INFORMATION. THIS SHEET MAY NOT BE TRANSFERED FROM THE CUSTODY OF THE COMPETENT DIVISION OF R&D DEPARTMENT EXCEPT AS AUTHORIZED BY COMPAL ELECTRONICS, INC. NEITHER THIS SHEET NOR THE INFORMATION IT CONTAINS MAY BE USED BY OR DISCLOSED TO ANY THIRD PARTY WITHOUT PRIOR WRITTEN CONSENT OF COMPAL ELECTRONICS, INC.

Compal Electronics, Inc.	
Title	Springdale-DDR Interface
Size C	Document Number LA-1711
Rev	X00-G
Date: Tuesday, March 18, 2003	Sheet 11 of 54

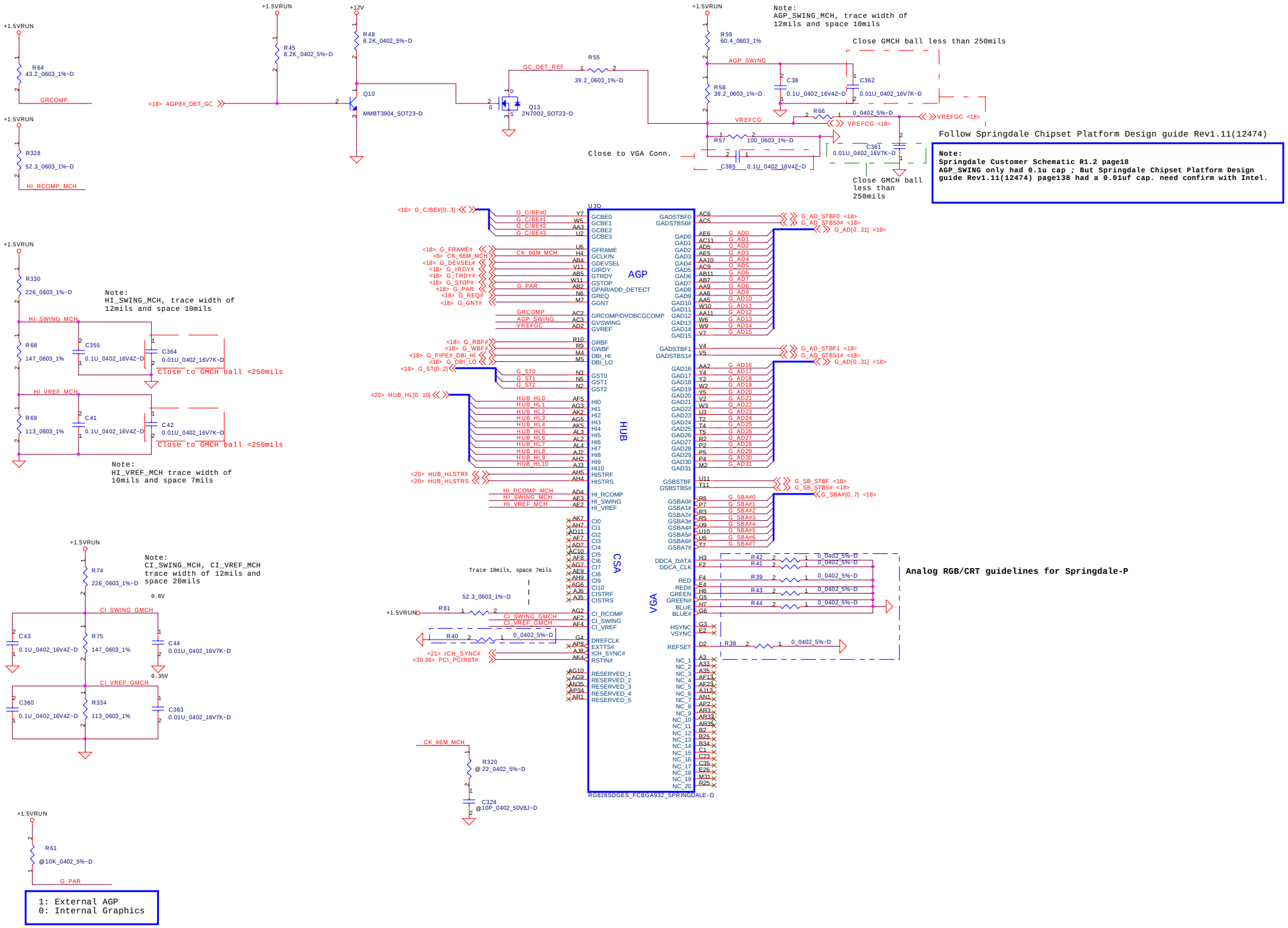

THIS SHEET OF ENGINEERING DRAWING IS THE PROPRIETARY PROPERTY OF COMPAL ELECTRONICS, INC. AND CONTAINS CONFIDENTIAL AND TRADE SECRET INFORMATION. THIS SHEET MAY NOT BE TRANSFERED FROM THE CUSTODY OF THE COMPETENT DIVISION OF R&D DEPARTMENT EXCEPT AS AUTHORIZED BY COMPAL ELECTRONICS, INC. NEITHER THIS SHEET NOR THE INFORMATION IT CONTAINS MAY BE USED BY OR DISCLOSED TO ANY THIRD PARTY WITHOUT PRIOR WRITTEN CONSENT OF COMPAL ELECTRONICS, INC.

Title	Springdale-AGP/HUB/VGA/CSA		
Size C	Document Number LA-1711		Rev X00-G
Date: Tuesday, March 18, 2003	Sheet 12 of 54		

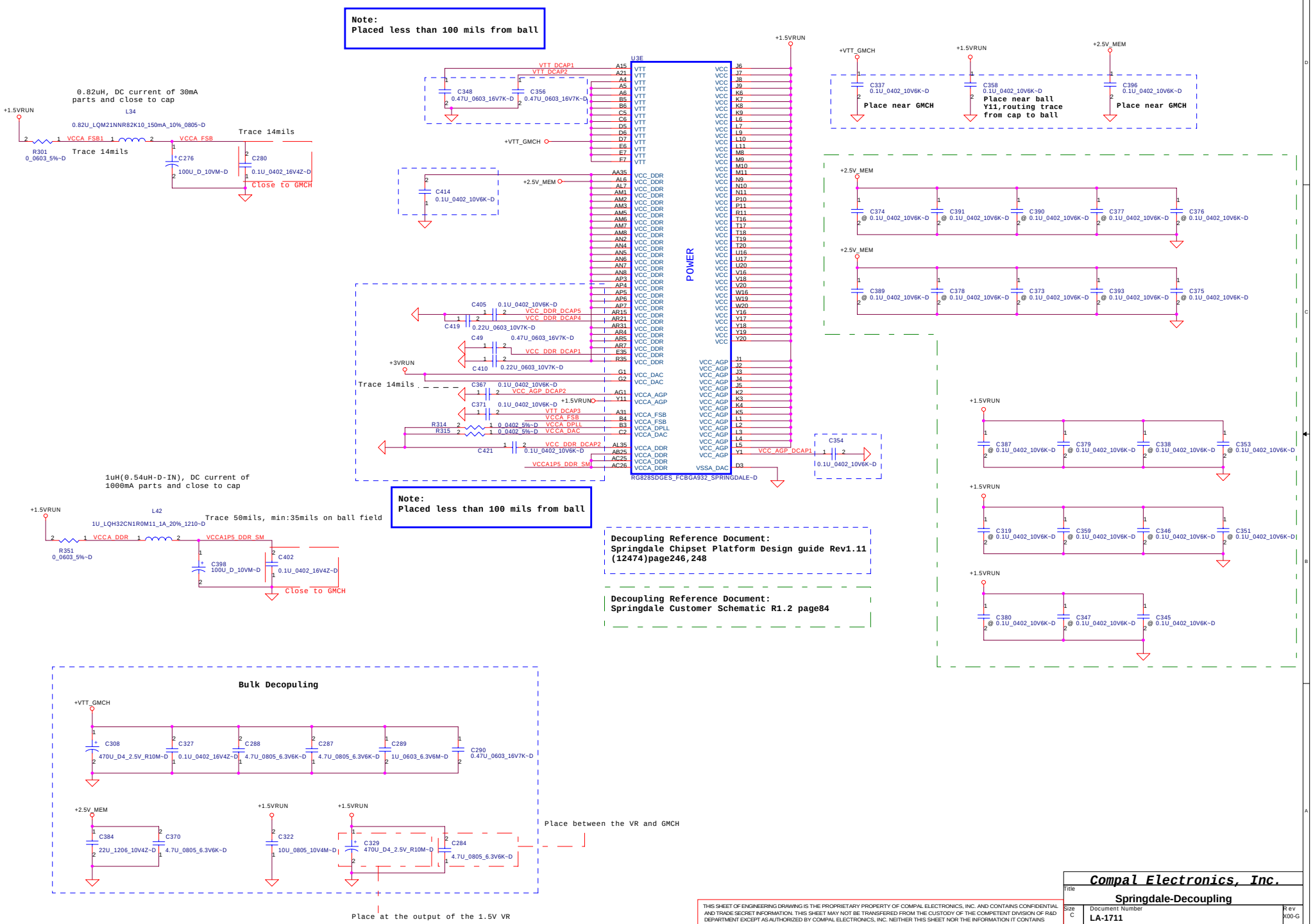

THIS SHEET OF ENGINEERING DRAWING IS THE PROPRIETARY PROPERTY OF COMPAL ELECTRONICS, INC. AND CONTAINS CONFIDENTIAL AND TRADE SECRET INFORMATION. THIS SHEET MAY NOT BE TRANSFERED FROM THE CUSTODY OF THE COMPETENT DIVISION OF R&D DEPARTMENT EXCEPT AS AUTHORIZED BY COMPAL ELECTRONICS, INC. NEITHER THIS SHEET NOR THE INFORMATION IT CONTAINS MAY BE USED BY OR DISCLOSED TO ANY THIRD PARTY WITHOUT PRIOR WRITTEN CONSENT OF COMPAL ELECTRONICS, INC.

Compal Electronics, Inc.

Title: Springdale-Decoupling

Size	Document Number	Rev
C	LA-1711	X00-G

Date: Tuesday, March 18, 2003 Sheet 13 of 54

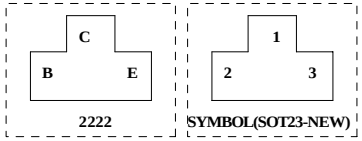

FAN1 Control and Tachometer

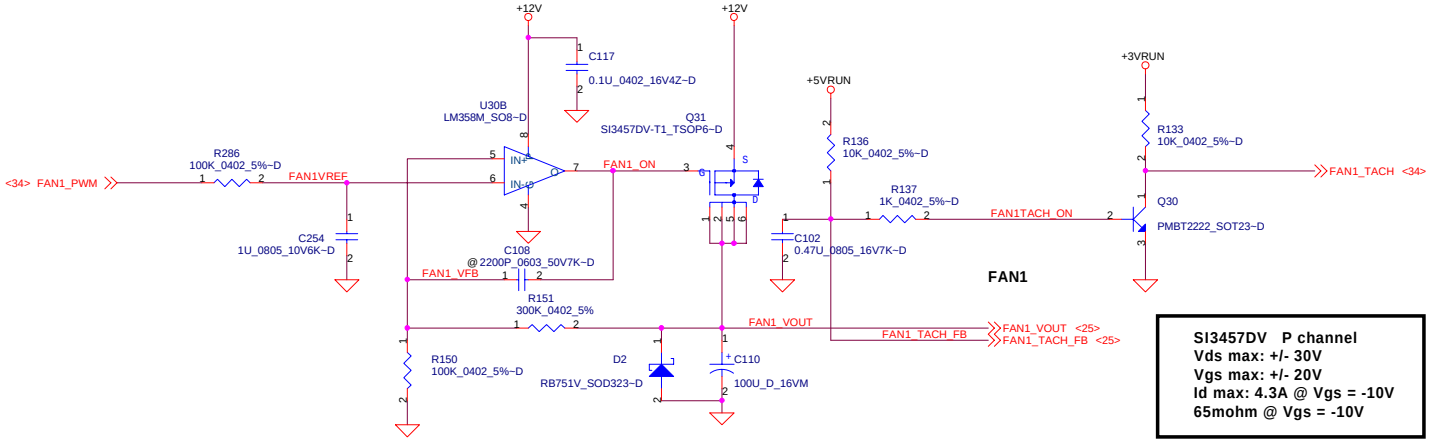

SI3457DV P channel
Vds max: +/- 30V
Vgs max: +/- 20V
Id max: 4.3A @ Vgs = -10V
65mohm @ Vgs = -10V

FAN2 Control and Tachometer

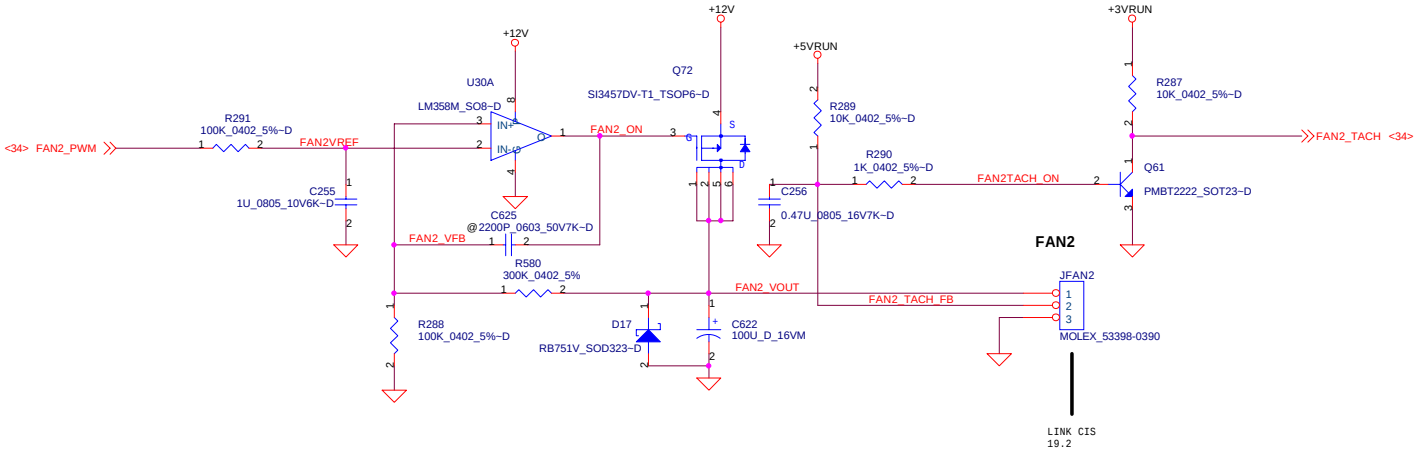

THIS SHEET OF ENGINEERING DRAWING IS THE PROPRIETARY PROPERTY OF COMPAL ELECTRONICS, INC. AND CONTAINS CONFIDENTIAL AND TRADE SECRET INFORMATION. THIS SHEET MAY NOT BE TRANSFERRED FROM THE CUSTODY OF THE COMPETENT DIVISION OF R&D DEPARTMENT EXCEPT AS AUTHORIZED BY COMPAL ELECTRONICS, INC. NEITHER THIS SHEET NOR THE INFORMATION IT CONTAINS MAY BE USED BY OR DISCLOSED TO ANY THIRD PARTY WITHOUT PRIOR WRITTEN CONSENT OF COMPAL ELECTRONICS, INC.

Compal Electronics, Inc.	
Title	FAN CONTROL
Size / Document Number	LA-1711
Rev	X00-G
Date: Tuesday, March 18, 2003	Sheet 14 of 54

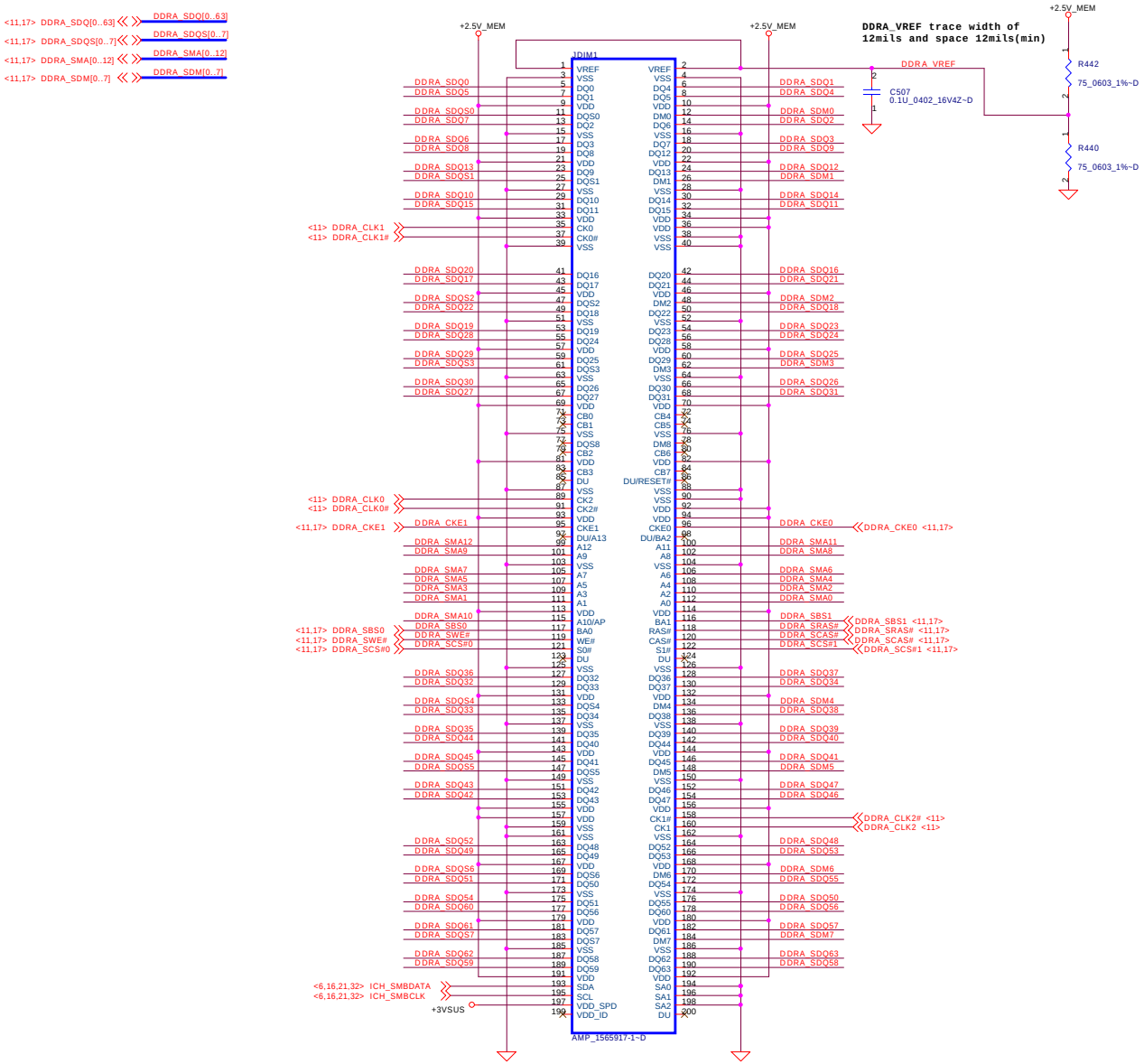

DIMM0 STANDARD

System Memory Decoupling caps

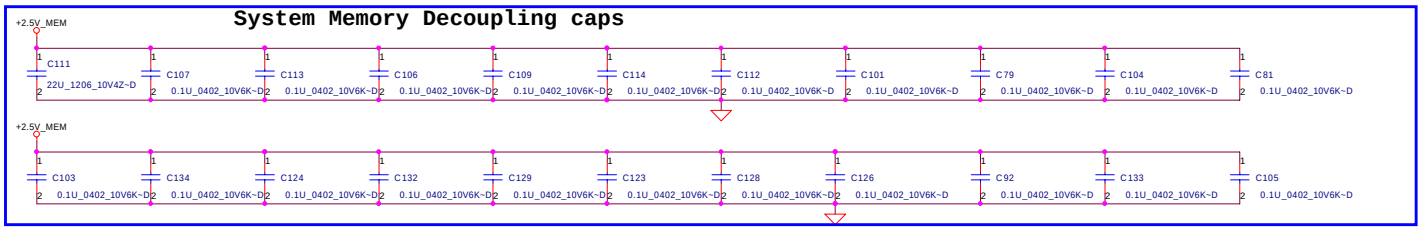

Follow

Decoupling Reference Document:
Springdale Customer Schematic R1.2 page22
each Channel(two DIMMs) requirement 22uF*1 ; 0.1uF*21

Decoupling Reference Document:
Springdale Chipset Platform Design guide Rev1.11
(12474)pag 271 each DIMM(two) requirement 0.1uF*42

THIS SHEET OF ENGINEERING DRAWING IS THE PROPRIETARY PROPERTY OF COMPAL ELECTRONICS, INC. AND CONTAINS CONFIDENTIAL AND TRADE SECRET INFORMATION. THIS SHEET MAY NOT BE TRANSFERED FROM THE CUSTODY OF THE COMPETENT DIVISION OF R&D DEPARTMENT EXCEPT AS AUTHORIZED BY COMPAL ELECTRONICS, INC. NEITHER THIS SHEET NOR THE INFORMATION IT CONTAINS MAY BE USED BY OR DISCLOSED TO ANY THIRD PARTY WITHOUT PRIOR WRITTEN CONSENT OF COMPAL ELECTRONICS, INC.

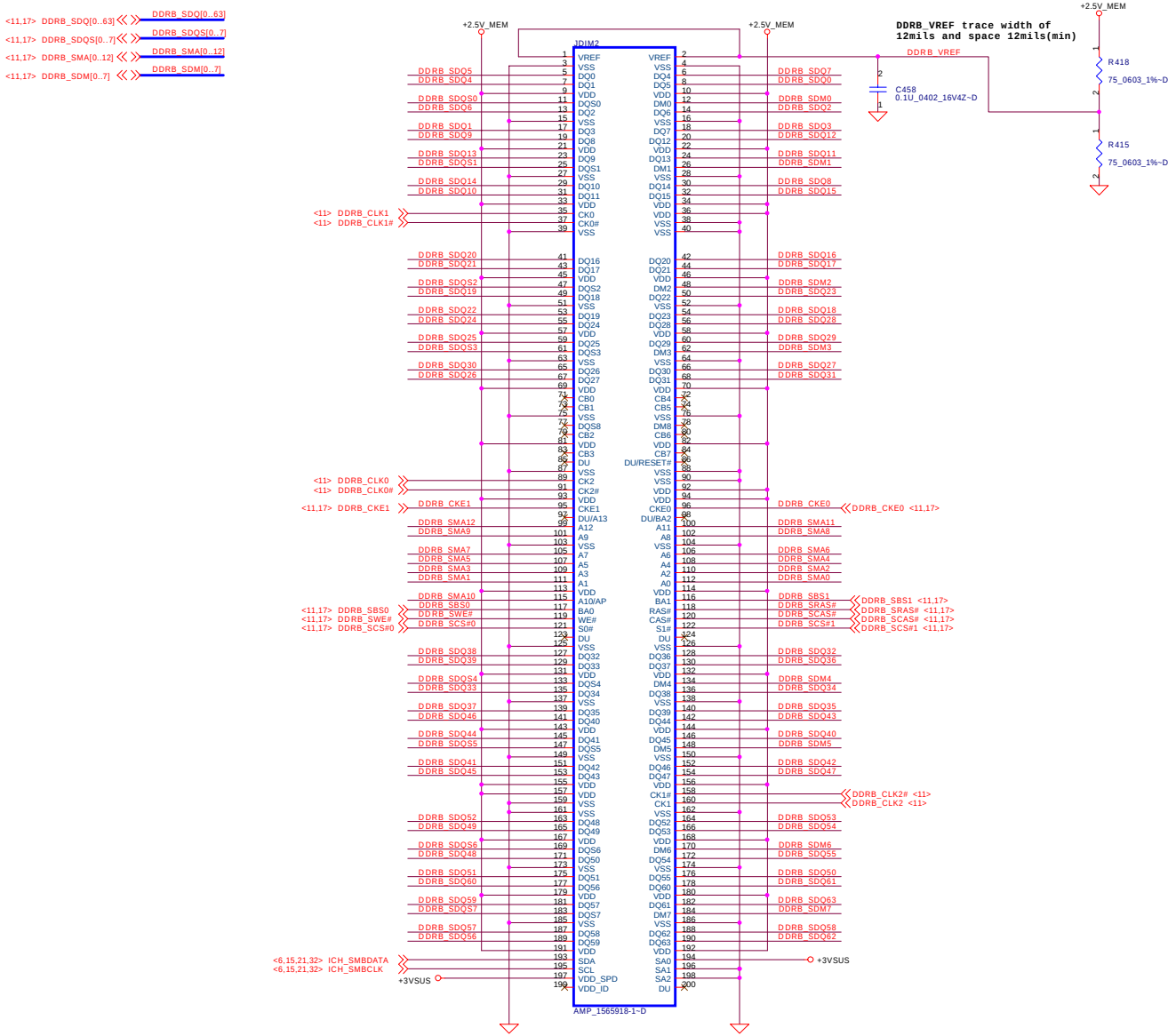

DIMM1
REVERSE

Follow

Decoupling Reference Document:
Springdale Customer Schematic R1.2 page26
each Channel(two DIMMs) requirement 0.1uF*24

System Memory Decoupling caps

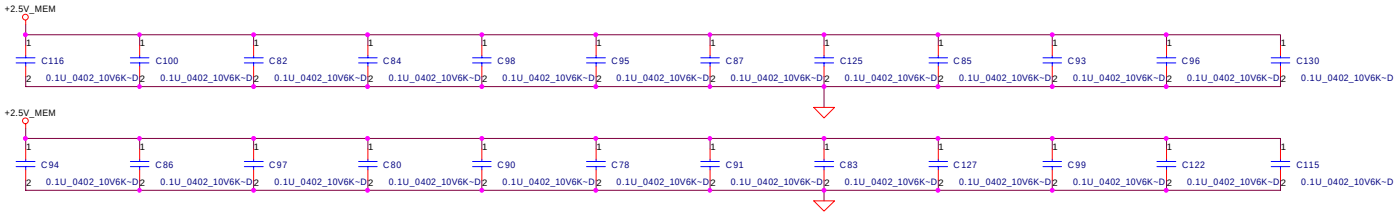

THIS SHEET OF ENGINEERING DRAWING IS THE PROPRIETARY PROPERTY OF COMPAL ELECTRONICS, INC. AND CONTAINS CONFIDENTIAL AND TRADE SECRET INFORMATION. THIS SHEET MAY NOT BE TRANSFERED FROM THE CUSTODY OF THE COMPETENT DIVISION OF R&D DEPARTMENT EXCEPT AS AUTHORIZED BY COMPAL ELECTRONICS, INC. NEITHER THIS SHEET NOR THE INFORMATION IT CONTAINS MAY BE USED BY OR DISCLOSED TO ANY THIRD PARTY WITHOUT PRIOR WRITTEN CONSENT OF COMPAL ELECTRONICS, INC.

Compal Electronics, Inc.	
Title	DDR-SODIMM SLOT2
Size	Document Number: LA-1711
Rev	X00-G
Date: Tuesday, March 18, 2003	Sheet 16 of 54

Channel A(DIMM0) Termination resistors & Decoupling caps

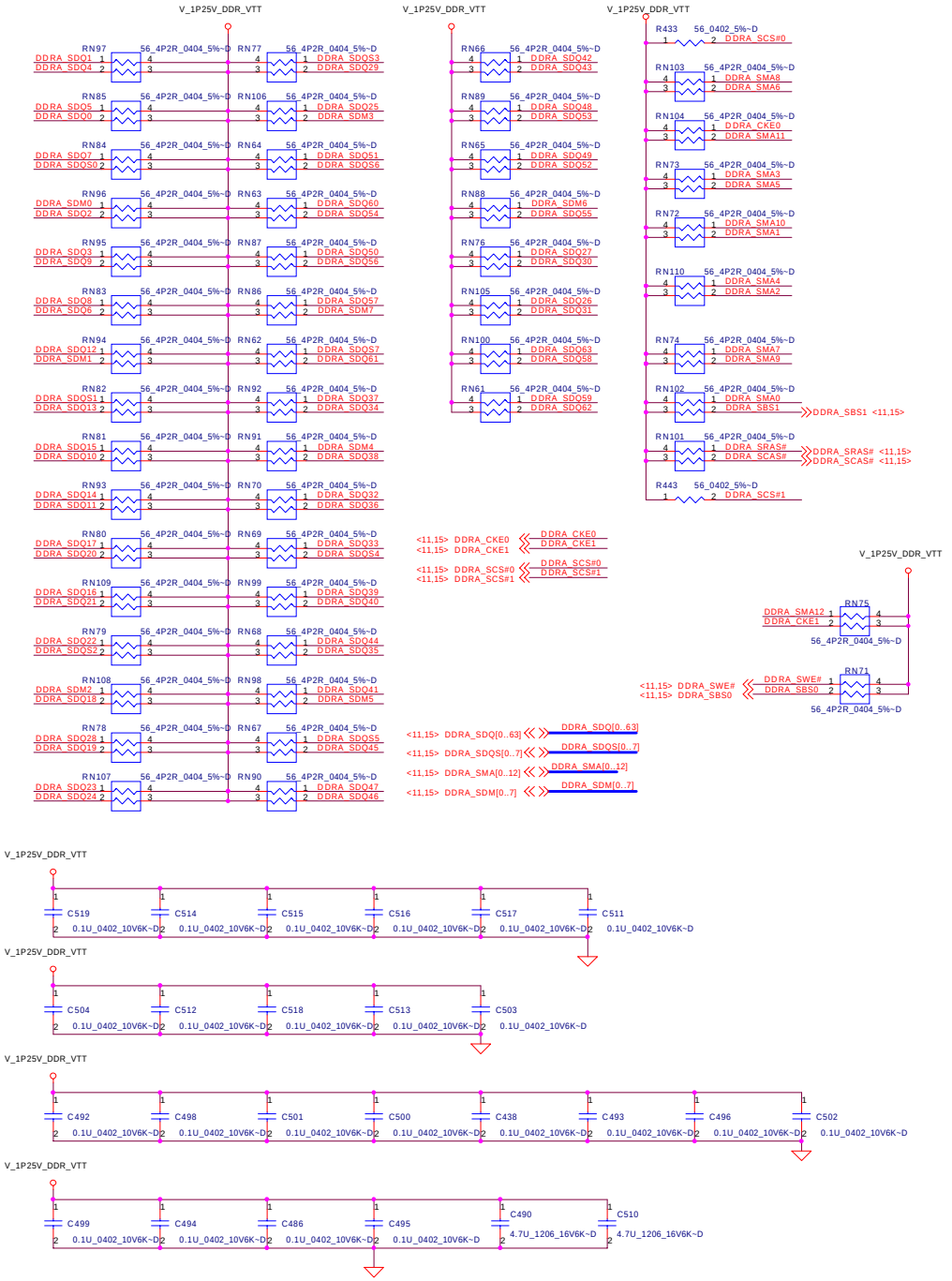

Decoupling Reference Document:
Springdale Customer Schematic R1.2 page22
each Channel(two DIMMs) requirement 4.7u*2 ;
0.1uF*28

We used one DIMM, so place 4.7uF*2 ; 0.1uF*23(11/6/02')

Channel B(DIMM1) Termination resistors & Decoupling caps

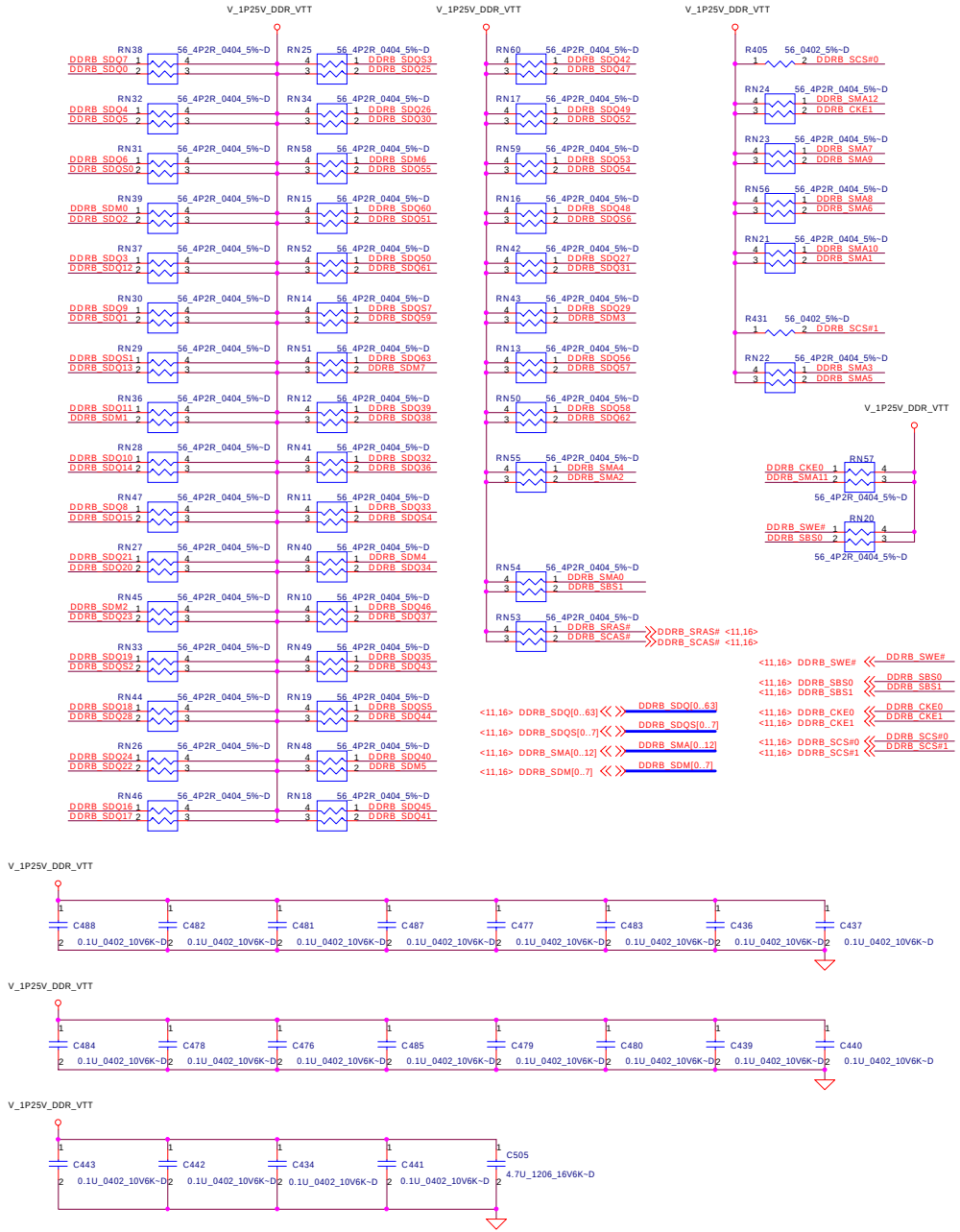

Decoupling Reference Document:
Springdale Customer Schematic R1.2 page26
each Channel(two DIMMs) requirement 4.7u*2 ;
0.1uF*26

We used one DIMM, so place 4.7uF*1 ; 0.1uF*20(11/6/02')

THIS SHEET OF ENGINEERING DRAWING IS THE PROPRIETARY PROPERTY OF COMPAL ELECTRONICS, INC. AND CONTAINS CONFIDENTIAL AND TRADE SECRET INFORMATION. THIS SHEET MAY NOT BE TRANSFERED FROM THE CUSTODY OF THE COMPETENT DIVISION OF R&D DEPARTMENT EXCEPT AS AUTHORIZED BY COMPAL ELECTRONICS, INC. NEITHER THIS SHEET NOR THE INFORMATION IT CONTAINS MAY BE USED BY OR DISCLOSED TO ANY THIRD PARTY WITHOUT PRIOR WRITTEN CONSENT OF COMPAL ELECTRONICS, INC.

Title	DDR Termination Resistors		
Size C	Document Number LA-1711		Rev X00-G
Date: Tuesday, March 18, 2003	Sheet 17 of 54		

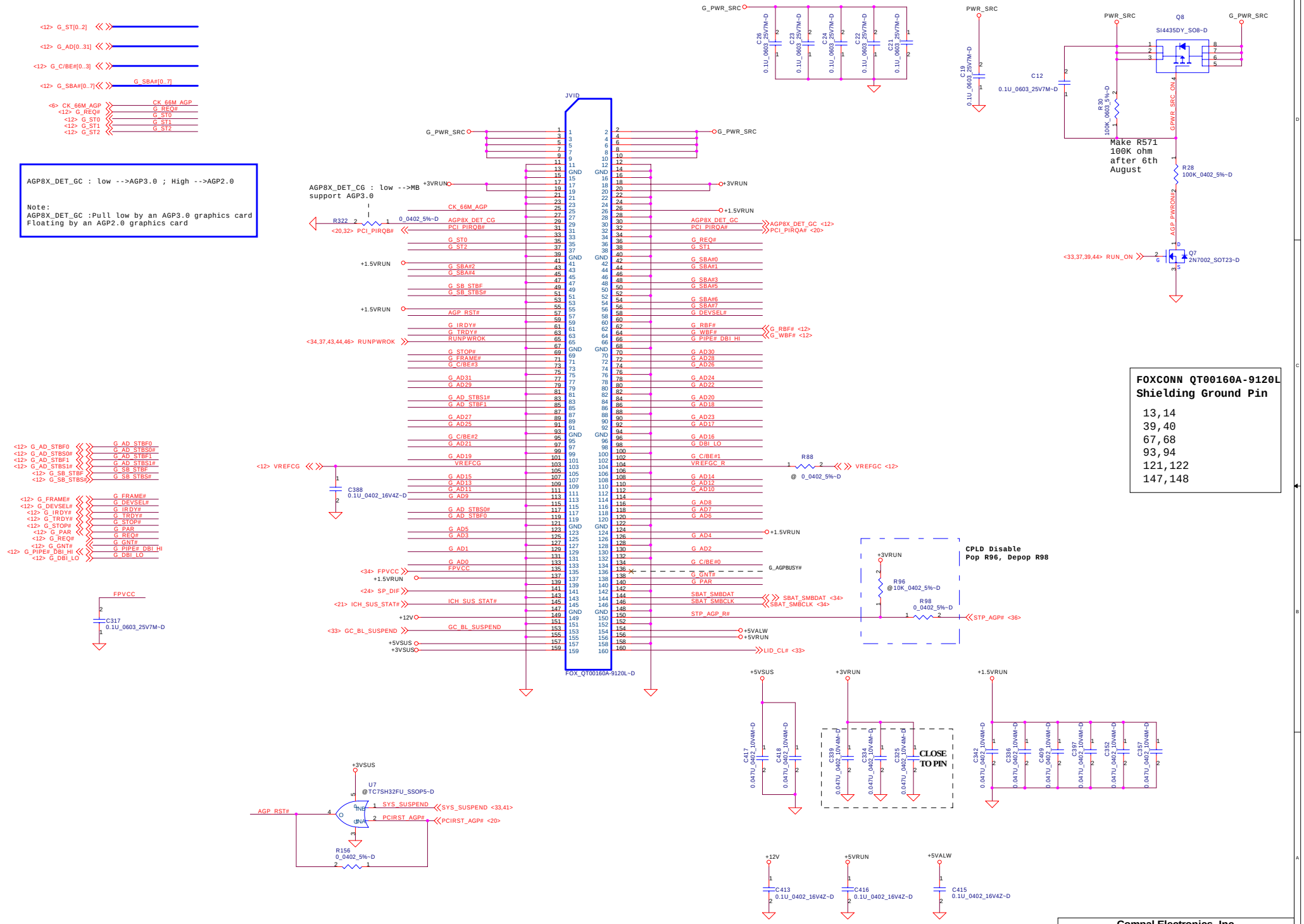

THIS SHEET OF ENGINEERING DRAWING IS THE PROPRIETARY PROPERTY OF COMPAL ELECTRONICS, INC. AND CONTAINS CONFIDENTIAL AND TRADE SECRET INFORMATION. THIS SHEET MAY NOT BE TRANSFERED FROM THE CUSTODY OF THE COMPETENT DIVISION OF R&D DEPARTMENT EXCEPT AS AUTHORIZED BY COMPAL ELECTRONICS, INC. NEITHER THIS SHEET NOR THE INFORMATION IT CONTAINS MAY BE USED BY OR DISCLOSED TO ANY THIRD PARTY WITHOUT PRIOR WRITTEN CONSENT OF COMPAL ELECTRONICS, INC.

Compal Electronics, Inc.	
Title	VGA Daughter Board Conn.
Size	
Document Number	LA-1711
Rev	X00-G
Date: Tuesday, March 18, 2003	Sheet 18 of 54

CPU Temperature Sensor

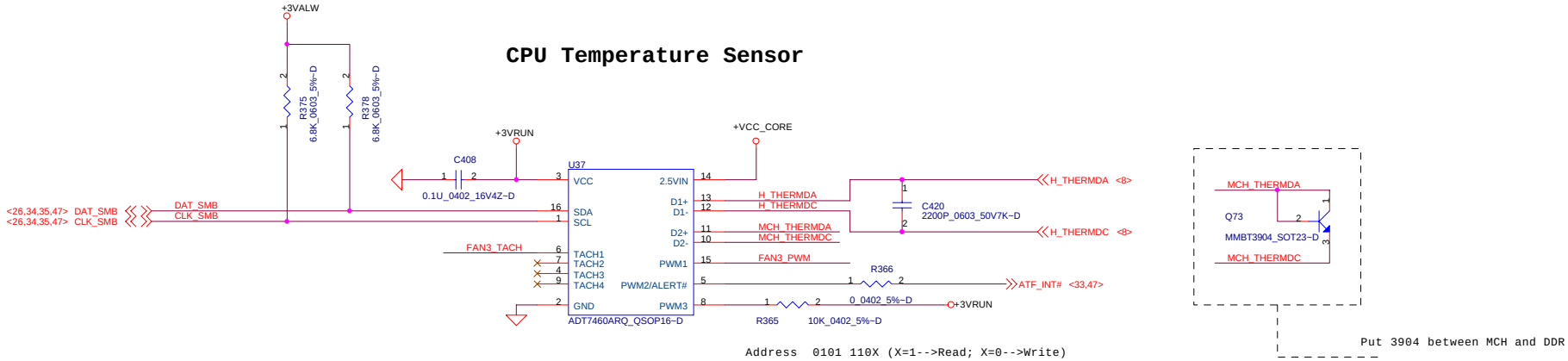

Address 0101 110X (X=1-->Read; X=0-->Write)

FAN3 Control and Tachometer

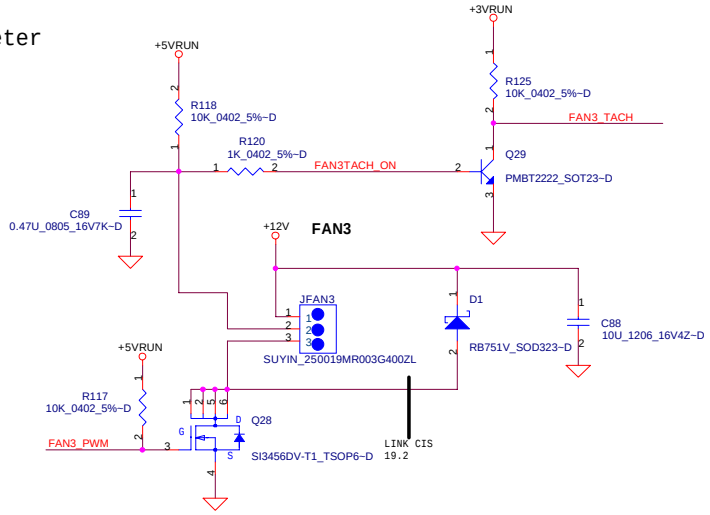

SI3456DV: N CHANNEL
VGS: 4.5V, RDS: 65 mOHM
Id(MAX): 5.1A

THIS SHEET OF ENGINEERING DRAWING IS THE PROPRIETARY PROPERTY OF COMPAL ELECTRONICS, INC. AND CONTAINS CONFIDENTIAL AND TRADE SECRET INFORMATION. THIS SHEET MAY NOT BE TRANSFERRED FROM THE CUSTODY OF THE COMPETENT DIVISION OF R&D DEPARTMENT EXCEPT AS AUTHORIZED BY COMPAL ELECTRONICS, INC. NEITHER THIS SHEET NOR THE INFORMATION IT CONTAINS MAY BE USED BY OR DISCLOSED TO ANY THIRD PARTY WITHOUT PRIOR WRITTEN CONSENT OF COMPAL ELECTRONICS, INC.

Compal Electronics, Inc.		
Title: CPU Thermal Sensor & FAN Control		
Size	Document Number: LA-1711	Rev X00-G
Date: Tuesday, March 18, 2003	Sheet 19 of 54	

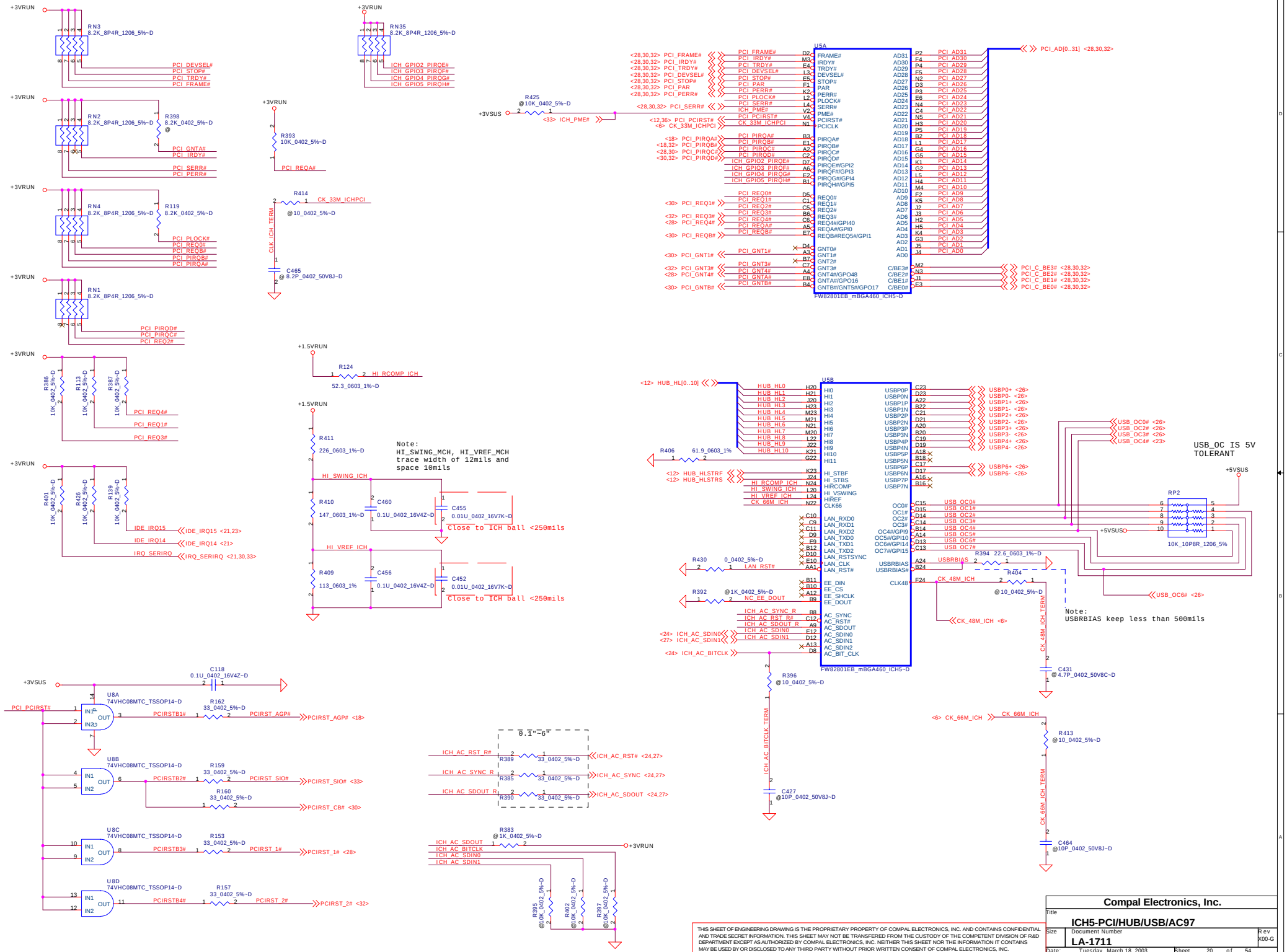

THIS SHEET OF ENGINEERING DRAWING IS THE PROPRIETARY PROPERTY OF COMPAL ELECTRONICS, INC. AND CONTAINS CONFIDENTIAL AND TRADE SECRET INFORMATION. THIS SHEET MAY NOT BE TRANSFERED FROM THE CUSTODY OF THE COMPETENT DIVISION OF R&D DEPARTMENT EXCEPT AS AUTHORIZED BY COMPAL ELECTRONICS, INC. NEITHER THIS SHEET NOR THE INFORMATION IT CONTAINS MAY BE USED BY OR DISCLOSED TO ANY THIRD PARTY WITHOUT PRIOR WRITTEN CONSENT OF COMPAL ELECTRONICS, INC.

Compal Electronics, Inc.	
Title	ICH5-PCI/HUB/USB/AC97
Size	
Document Number	LA-1711
Rev	X00-G
Date: Tuesday, March 18, 2003	Sheet 20 of 54

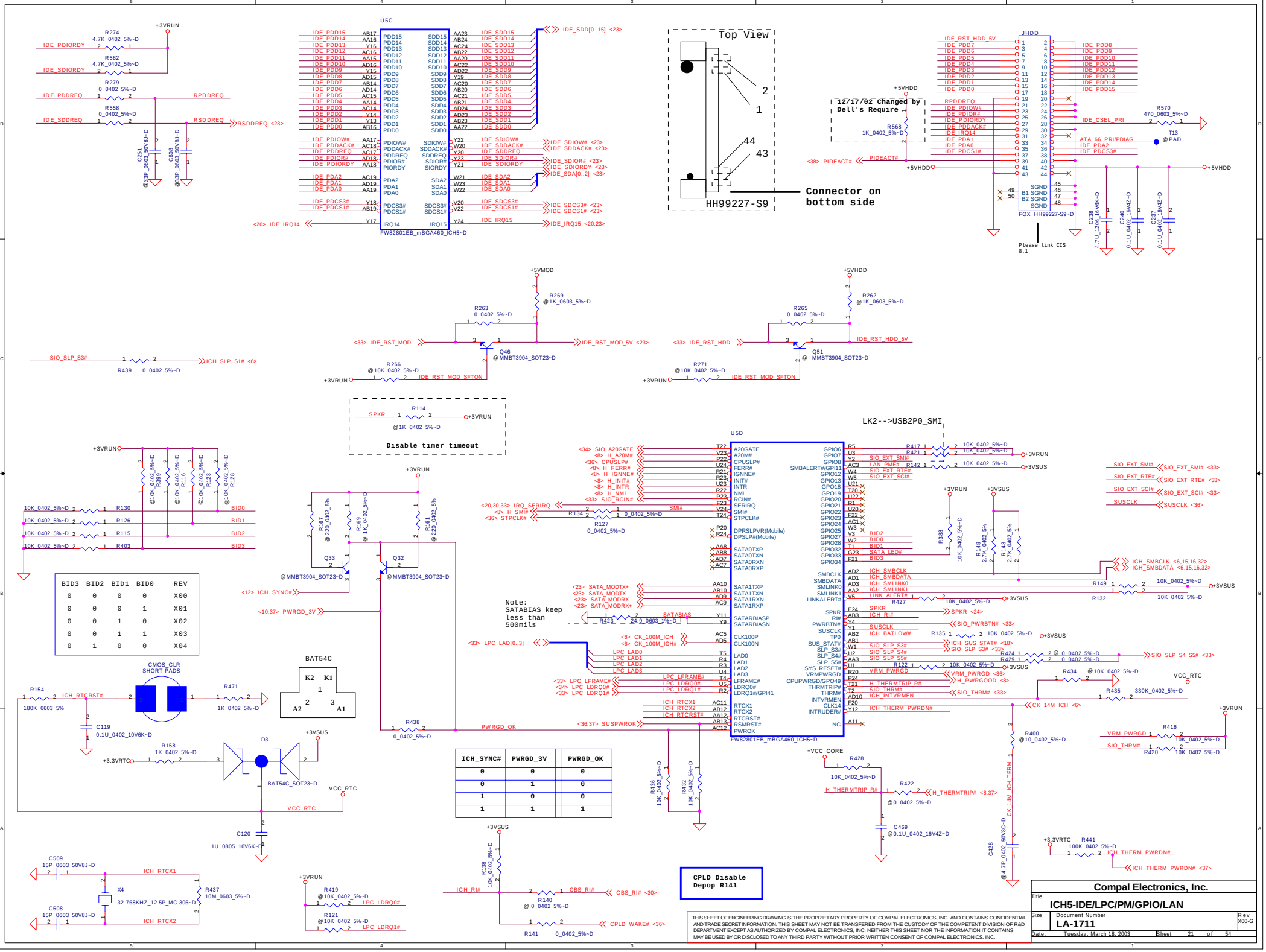

THIS SHEET OF ENGINEERING DRAWING IS THE PROPRIETARY PROPERTY OF COMPAL ELECTRONICS, INC. AND CONTAINS CONFIDENTIAL AND TRADE SECRET INFORMATION. THIS SHEET MAY NOT BE TRANSFERED FROM THE CUSTODY OF THE COMPETENT DIVISION OF R&D DEPARTMENT EXCEPT AS AUTHORIZED BY COMPAL ELECTRONICS, INC. NEITHER THIS SHEET NOR THE INFORMATION IT CONTAINS MAY BE USED BY OR DISCLOSED TO ANY THIRD PARTY WITHOUT PRIOR WRITTEN CONSENT OF COMPAL ELECTRONICS, INC.

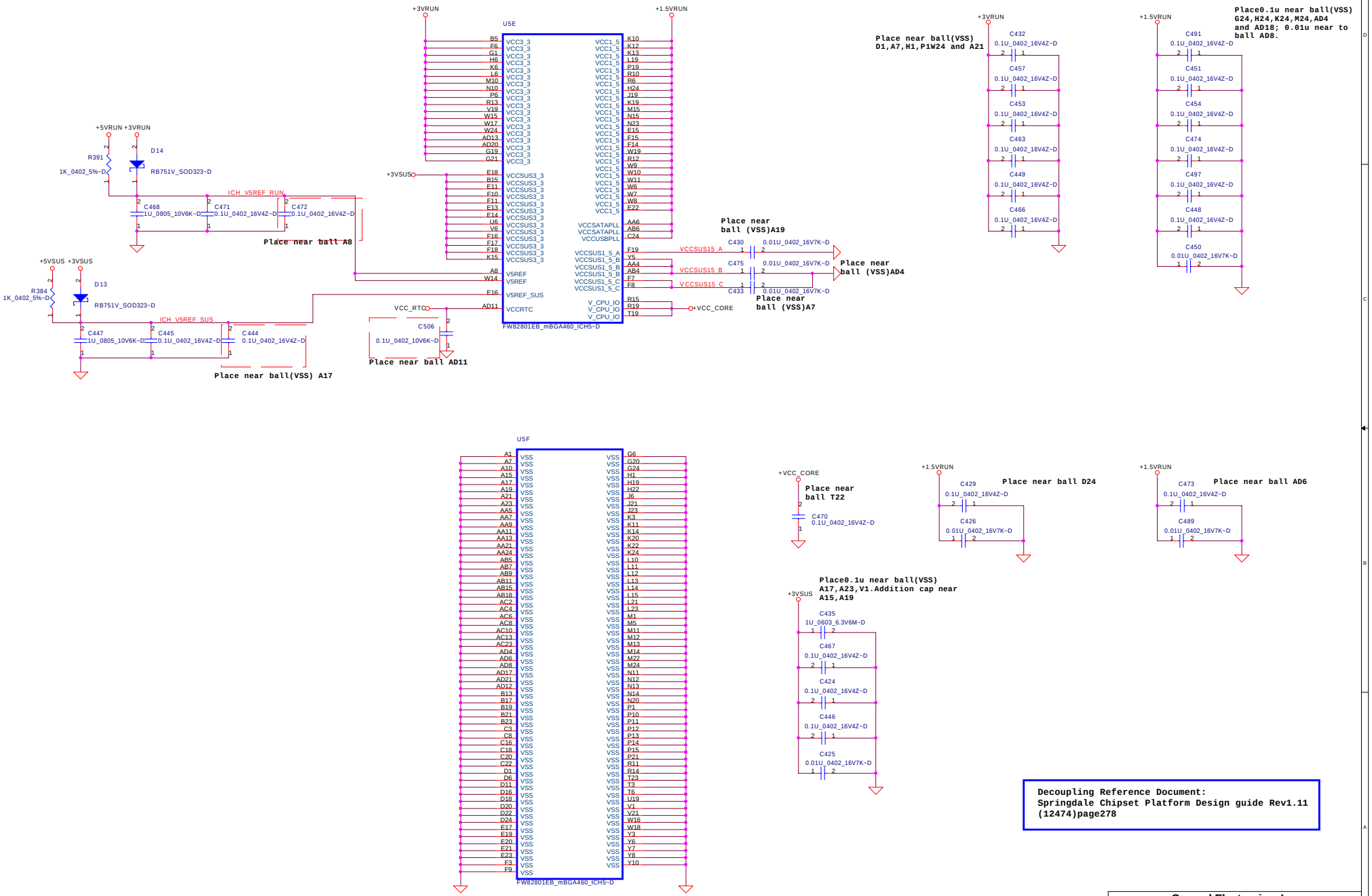

THIS SHEET OF ENGINEERING DRAWING IS THE PROPRIETARY PROPERTY OF COMPAL ELECTRONICS, INC. AND CONTAINS CONFIDENTIAL AND TRADE SECRET INFORMATION. THIS SHEET MAY NOT BE TRANSFERED FROM THE CUSTODY OF THE COMPETENT DIVISION OF R&D DEPARTMENT EXCEPT AS AUTHORIZED BY COMPAL ELECTRONICS, INC. NEITHER THIS SHEET NOR THE INFORMATION IT CONTAINS MAY BE USED BY OR DISCLOSED TO ANY THIRD PARTY WITHOUT PRIOR WRITTEN CONSENT OF COMPAL ELECTRONICS, INC.

Compal Electronics, Inc.			
Title: ICH5 Power & Decoupling			
Size	Document Number: LA-1711		Rev: X00-G
Date: Tuesday, March 18, 2003	Sheet 22 of 54		

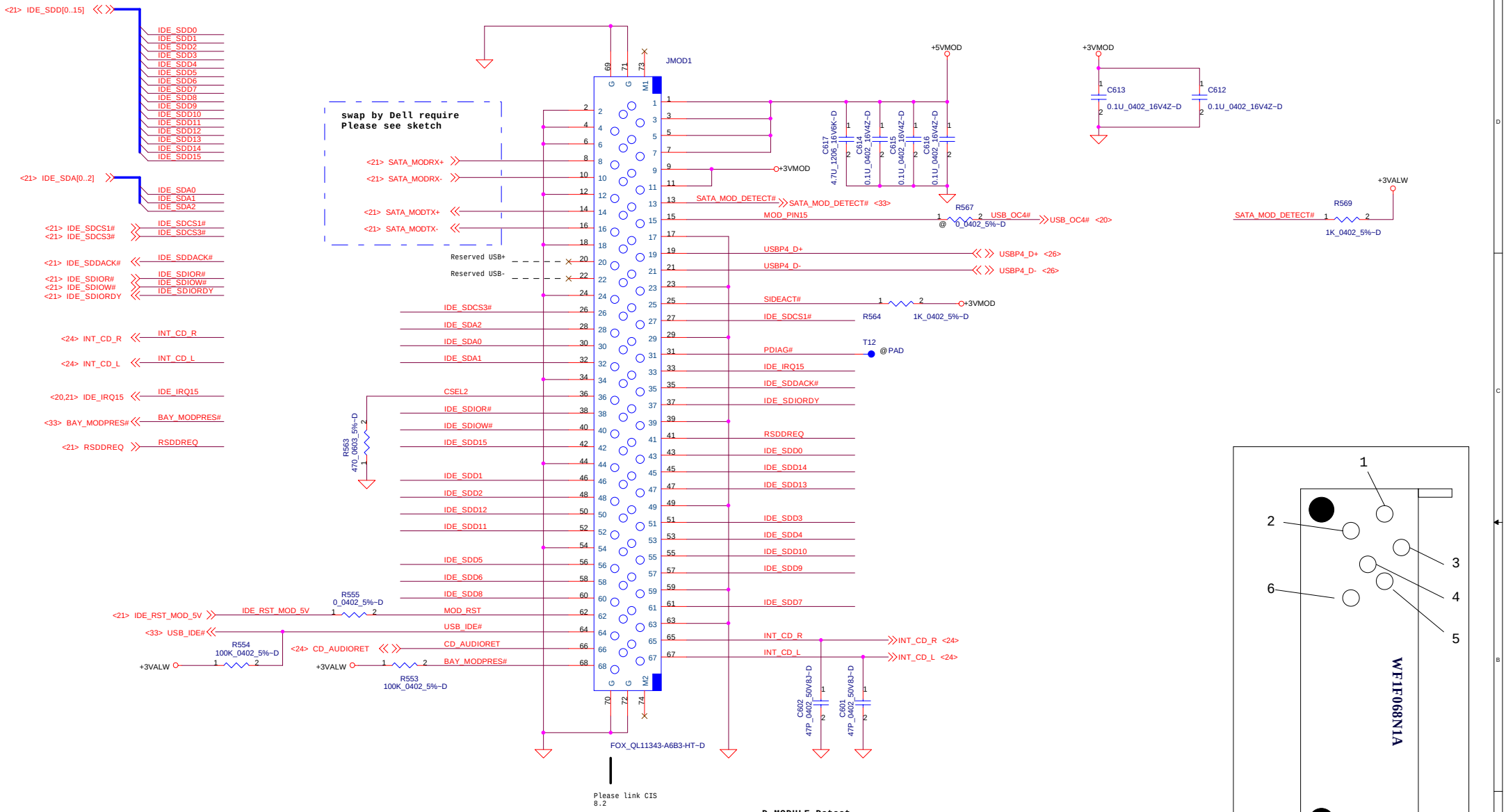

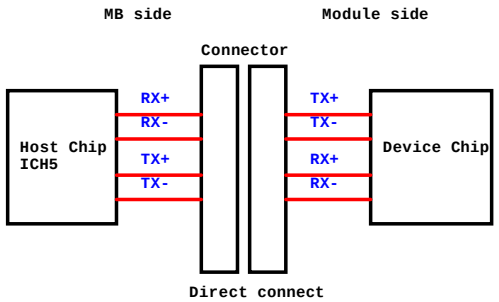

D-MODULE Detect

JMOD1 / Device	Pin68 BAY_MODPRES#	Pin64 USB_IDE#	Pin13 SATA_MOD_DETECT#
Parallel IDE	LOW	LOW	HIGH
USB Device	LOW	HIGH	HIGH
S-ATA IDE	LOW	HIGH	LOW
None	HIGH	X	X

THIS SHEET OF ENGINEERING DRAWING IS THE PROPRIETARY PROPERTY OF COMPAL ELECTRONICS, INC. AND CONTAINS CONFIDENTIAL AND TRADE SECRET INFORMATION. THIS SHEET MAY NOT BE TRANSFERRED FROM THE CUSTODY OF THE COMPETENT DIVISION OF R&D DEPARTMENT EXCEPT AS AUTHORIZED BY COMPAL ELECTRONICS, INC. NEITHER THIS SHEET NOR THE INFORMATION IT CONTAINS MAY BE USED BY OR DISCLOSED TO ANY THIRD PARTY WITHOUT PRIOR WRITTEN CONSENT OF COMPAL ELECTRONICS, INC.

Compal Electronics, Inc.

Title: **D- MODULE**

Size | Document Number: **LA-1711** | Rev: X00-G

Date: Tuesday, March 18, 2003 | Sheet 23 of 54

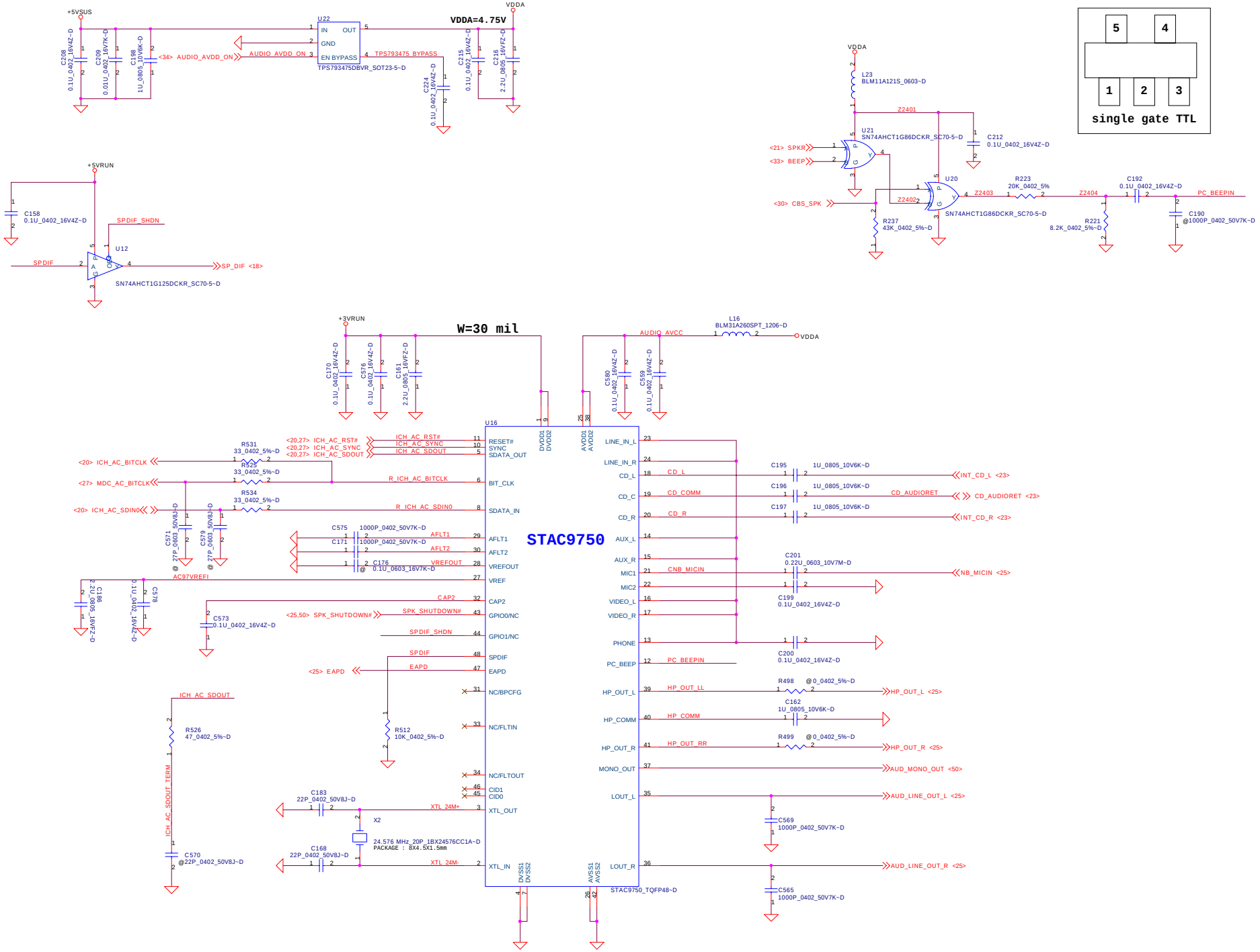

THIS SHEET OF ENGINEERING DRAWING IS THE PROPRIETARY PROPERTY OF COMPAL ELECTRONICS, INC. AND CONTAINS CONFIDENTIAL AND TRADE SECRET INFORMATION. THIS SHEET MAY NOT BE TRANSFERED FROM THE CUSTODY OF THE COMPETENT DIVISION OF R&D DEPARTMENT EXCEPT AS AUTHORIZED BY COMPAL ELECTRONICS, INC. NEITHER THIS SHEET NOR THE INFORMATION IT CONTAINS MAY BE USED BY OR DISCLOSED TO ANY THIRD PARTY WITHOUT PRIOR WRITTEN CONSENT OF COMPAL ELECTRONICS, INC.

Compal Electronics, Inc.			
Title: AC97 Codec			
Size	Document Number: LA-1711		Rev: X00-G
Date: Tuesday, March 18, 2003	Sheet 24 of 54		

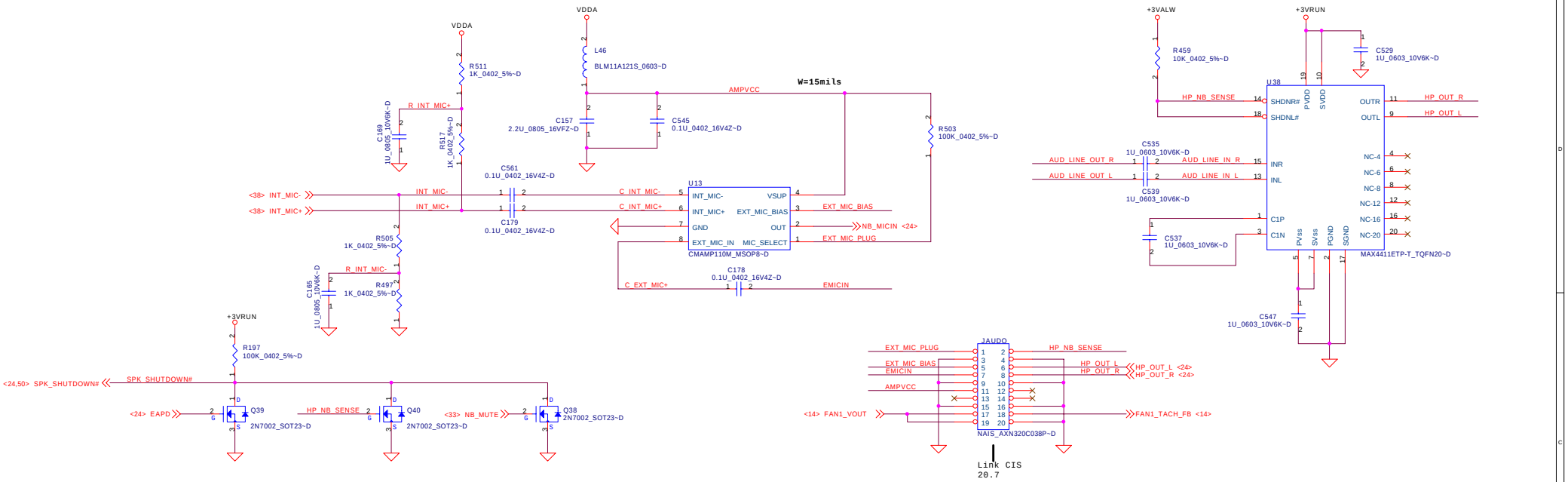

60mil single end connection near JACK

TRACE>15 mil

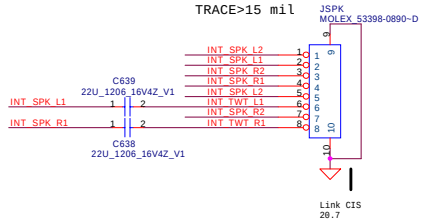

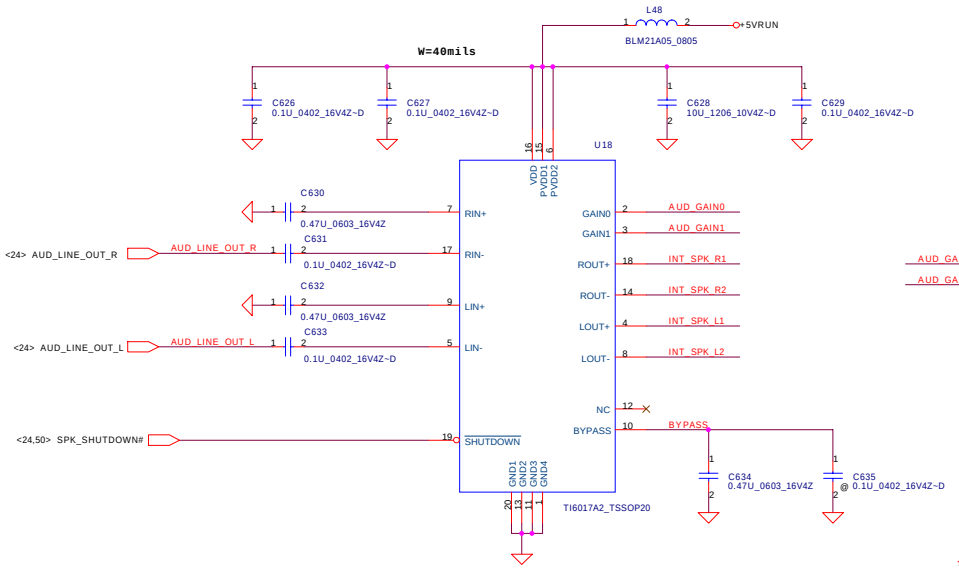

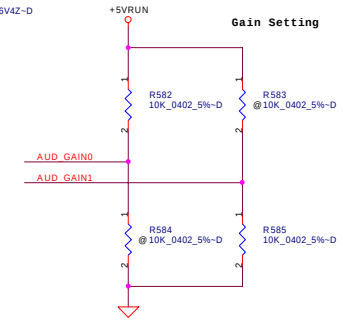

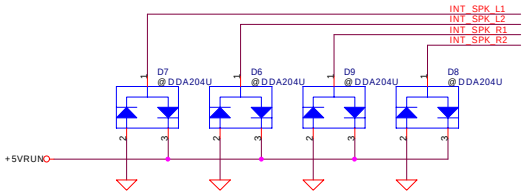

GAIN0	GAIN1	AV(inv)	INPUT IMPEDANCE
0	0	6dB	90K ohm
0	1	10dB	70K ohm
1	0	15.6dB	45K ohm
1	1	21.6dB	25K ohm

*

THIS SHEET OF ENGINEERING DRAWING IS THE PROPRIETARY PROPERTY OF COMPAL ELECTRONICS, INC. AND CONTAINS CONFIDENTIAL AND TRADE SECRET INFORMATION. THIS SHEET MAY NOT BE TRANSFERED FROM THE CUSTODY OF THE COMPETENT DIVISION OF R&D DEPARTMENT EXCEPT AS AUTHORIZED BY COMPAL ELECTRONICS, INC. NEITHER THIS SHEET NOR THE INFORMATION IT CONTAINS MAY BE USED BY OR DISCLOSED TO ANY THIRD PARTY WITHOUT PRIOR WRITTEN CONSENT OF COMPAL ELECTRONICS, INC.

Compal Electronics, Inc.

Title: **AMP and Phone Jack Interface**

Size | Document Number: **LA-1711** | Rev: X00-G

Date: Tuesday, March 18, 2003 | Sheet 25 of 54

USB PORT#	DESTINATION
0	BACK
1	BT
2	BACK
3	DOG
4	MOD
5	Reserved
6	BACK
7	Reserved

PLACE CHOKE(Resistors)
NEAR CONNECTOR

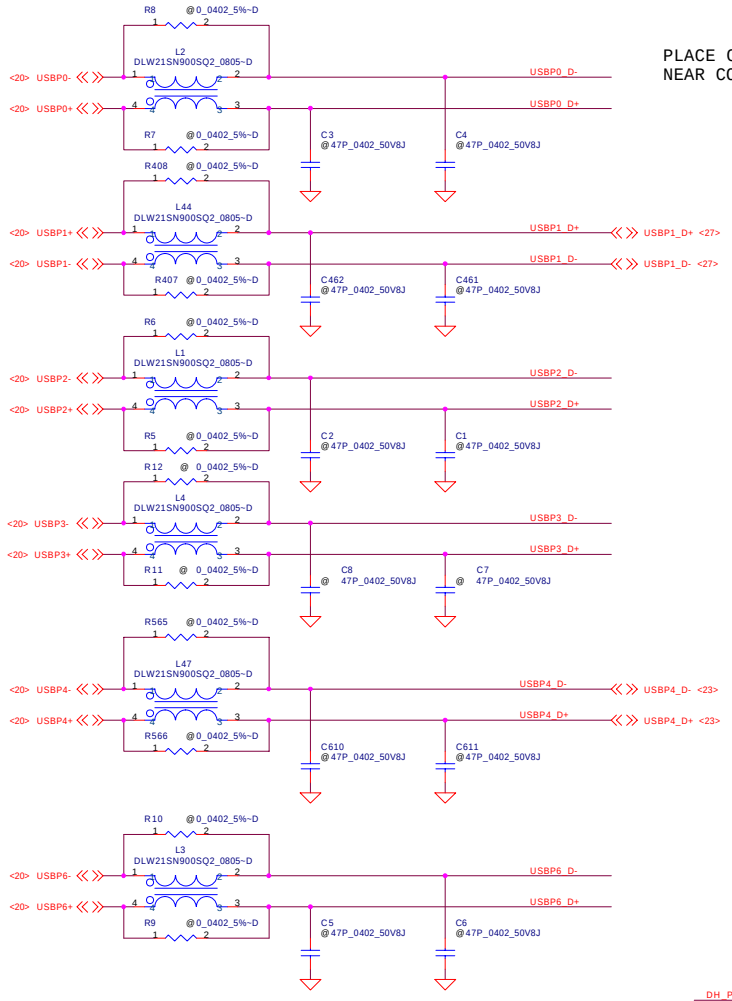

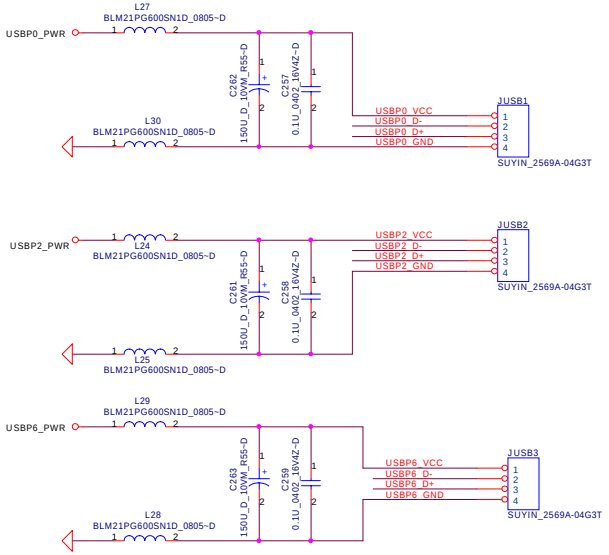

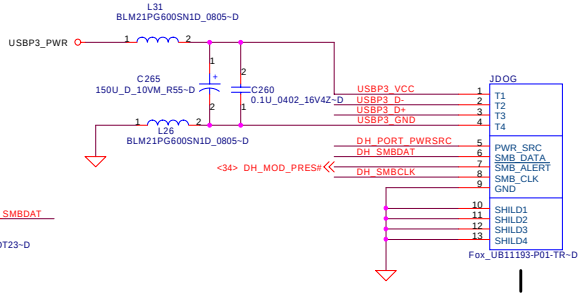

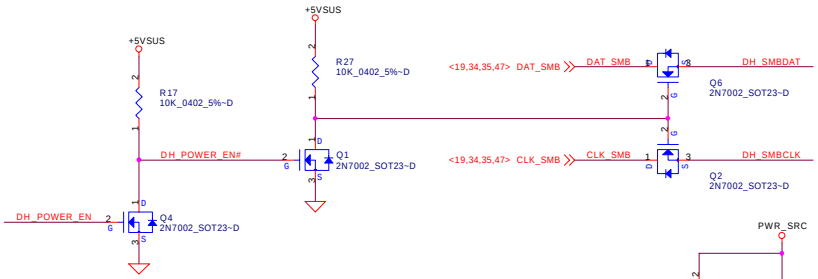

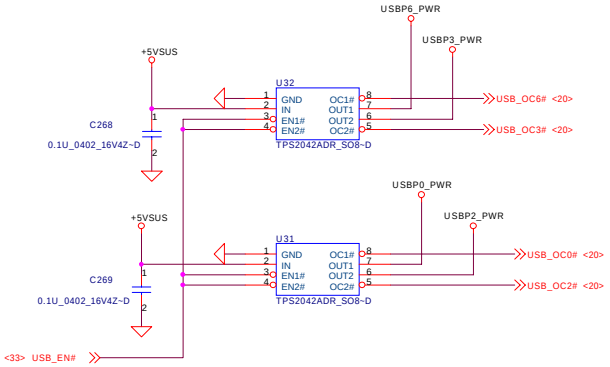

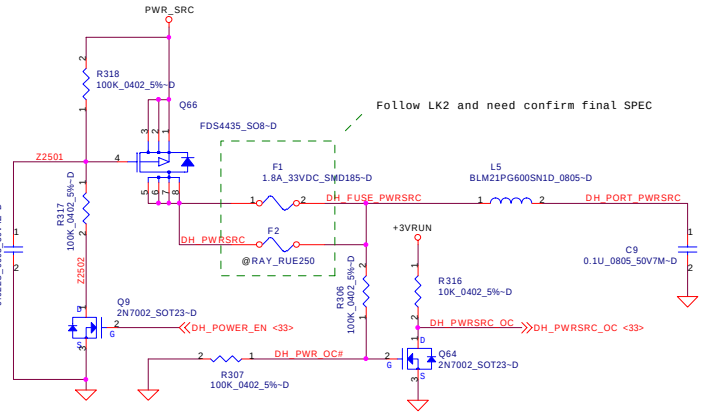

THIS SHEET OF ENGINEERING DRAWING IS THE PROPRIETARY PROPERTY OF COMPAL ELECTRONICS, INC. AND CONTAINS CONFIDENTIAL AND TRADE SECRET INFORMATION. THIS SHEET MAY NOT BE TRANSFERED FROM THE CUSTODY OF THE COMPETENT DIVISION OF R&D DEPARTMENT EXCEPT AS AUTHORIZED BY COMPAL ELECTRONICS, INC. NEITHER THIS SHEET NOR THE INFORMATION IT CONTAINS MAY BE USED BY OR DISCLOSED TO ANY THIRD PARTY WITHOUT PRIOR WRITTEN CONSENT OF COMPAL ELECTRONICS, INC.

Compal Electronics, Inc.

Title: USB(2.0) Connector

Size | Document Number: LA-1711 | Rev: X00-G

Date: Tuesday, March 18, 2003 | Sheet 26 of 54

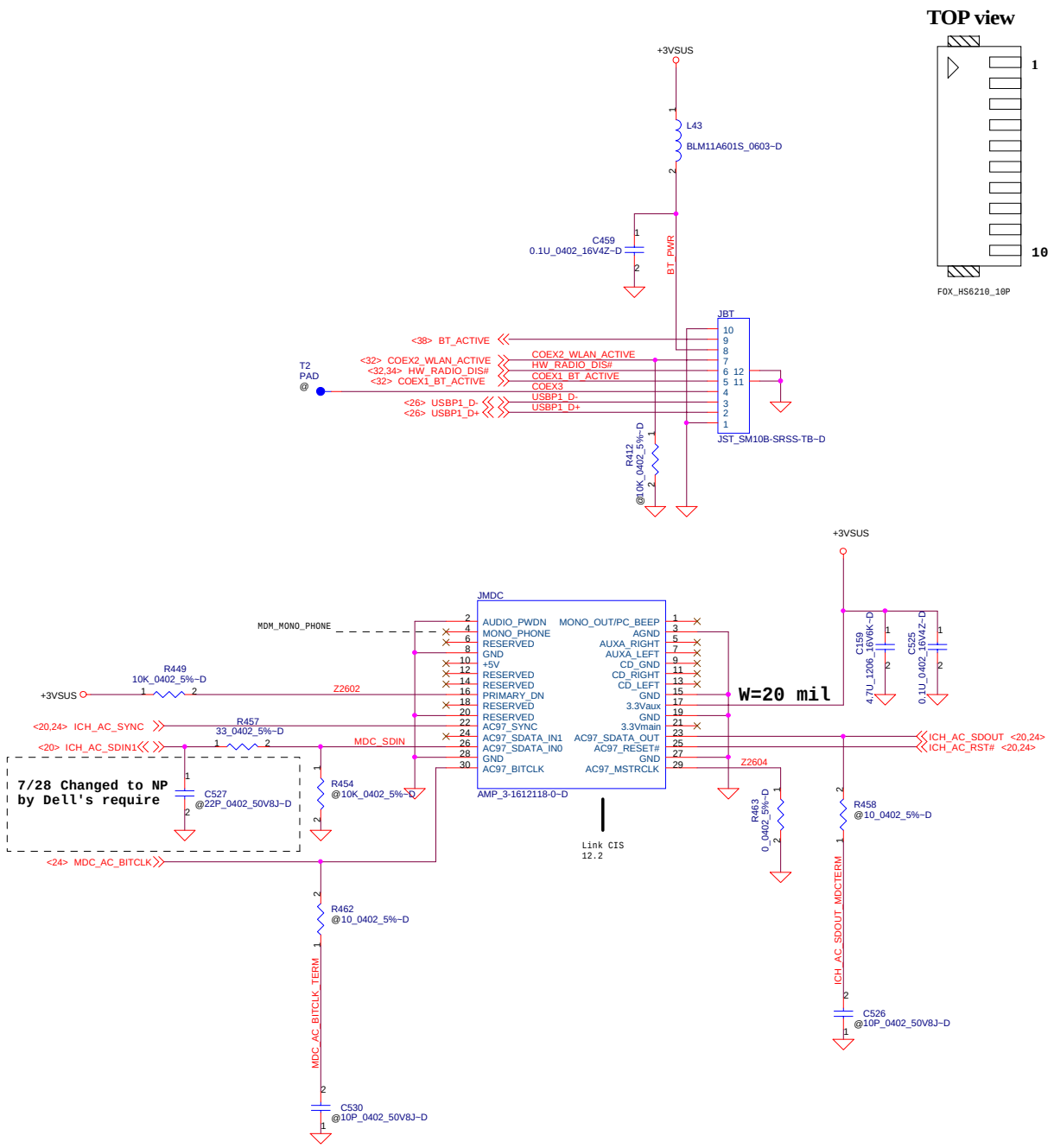

THIS SHEET OF ENGINEERING DRAWING IS THE PROPRIETARY PROPERTY OF COMPAL ELECTRONICS, INC. AND CONTAINS CONFIDENTIAL AND TRADE SECRET INFORMATION. THIS SHEET MAY NOT BE TRANSFERRED FROM THE CUSTODY OF THE COMPETENT DIVISION OF R&D DEPARTMENT EXCEPT AS AUTHORIZED BY COMPAL ELECTRONICS, INC. NEITHER THIS SHEET NOR THE INFORMATION IT CONTAINS MAY BE USED BY OR DISCLOSED TO ANY THIRD PARTY WITHOUT PRIOR WRITTEN CONSENT OF COMPAL ELECTRONICS, INC.

Compal Electronics, Inc.		
Title: BT PORT and MDC		
Size	Document Number: LA-1711	Rev X00-G
Date: Tuesday, March 18, 2003	Sheet 27 of 54	

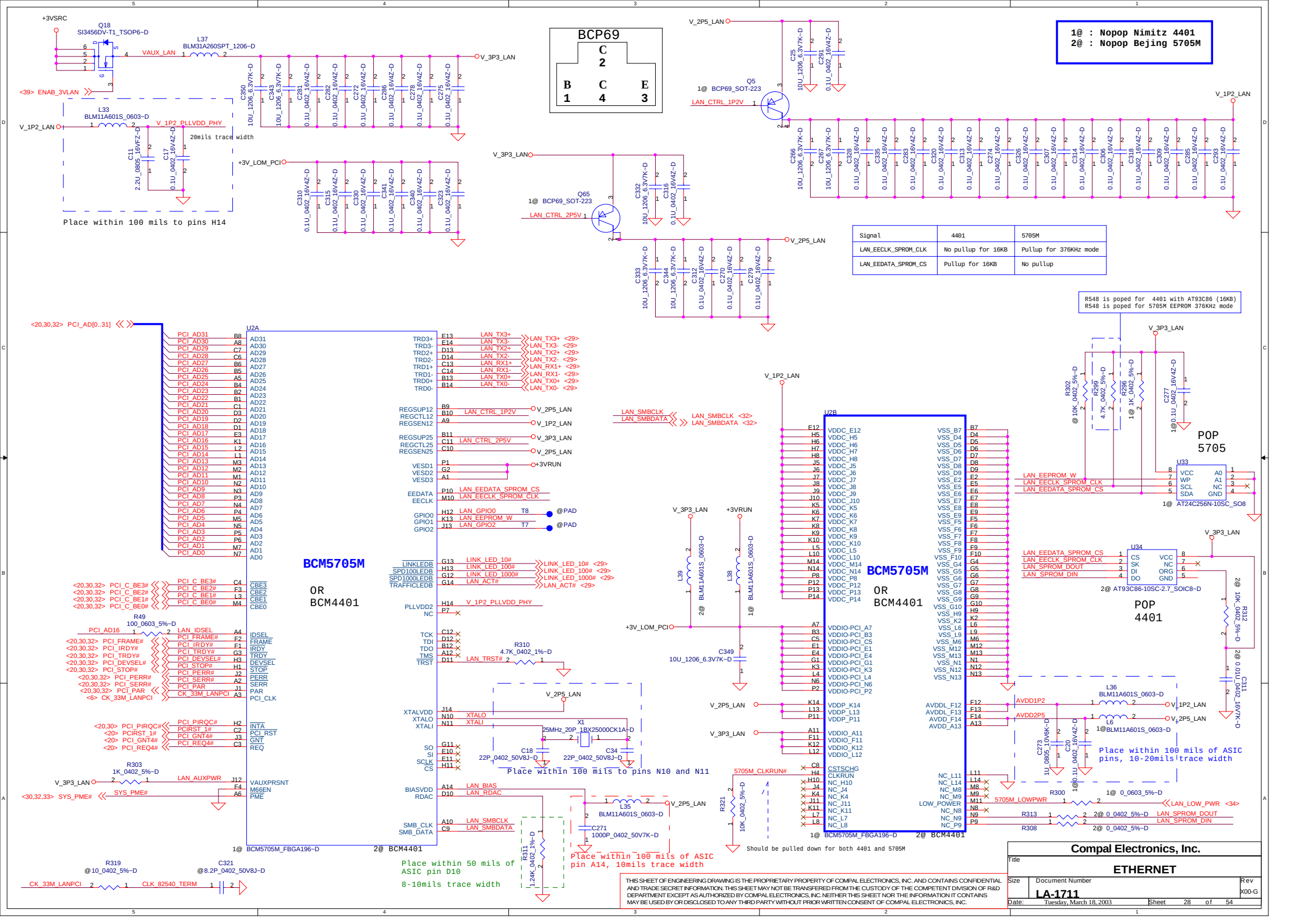

Signal	4401	5705M
LAN_EECLK_SPROM_CLK	No pullup for 16KB	Pullup for 376KHz mode
LAN_EEDATA_SPROM_CS	Pullup for 16KB	No pullup

Compal Electronics, Inc.

Title: ETHERNET

Size: Document Number: LA-1711 Rev: X00-G

Date: Tuesday, March 18, 2003 Sheet 28 of 54

THIS SHEET OF ENGINEERING DRAWING IS THE PROPRIETARY PROPERTY OF COMPAL ELECTRONICS, INC. AND CONTAINS CONFIDENTIAL AND TRADE SECRET INFORMATION. THIS SHEET MAY NOT BE TRANSFERRED FROM THE CUSTODY OF THE COMPETENT DIVISION OF R&D DEPARTMENT EXCEPT AS AUTHORIZED BY COMPAL ELECTRONICS, INC. NEITHER THIS SHEET NOR THE INFORMATION IT CONTAINS MAY BE USED BY OR DISCLOSED TO ANY THIRD PARTY WITHOUT PRIOR WRITTEN CONSENT OF COMPAL ELECTRONICS, INC.

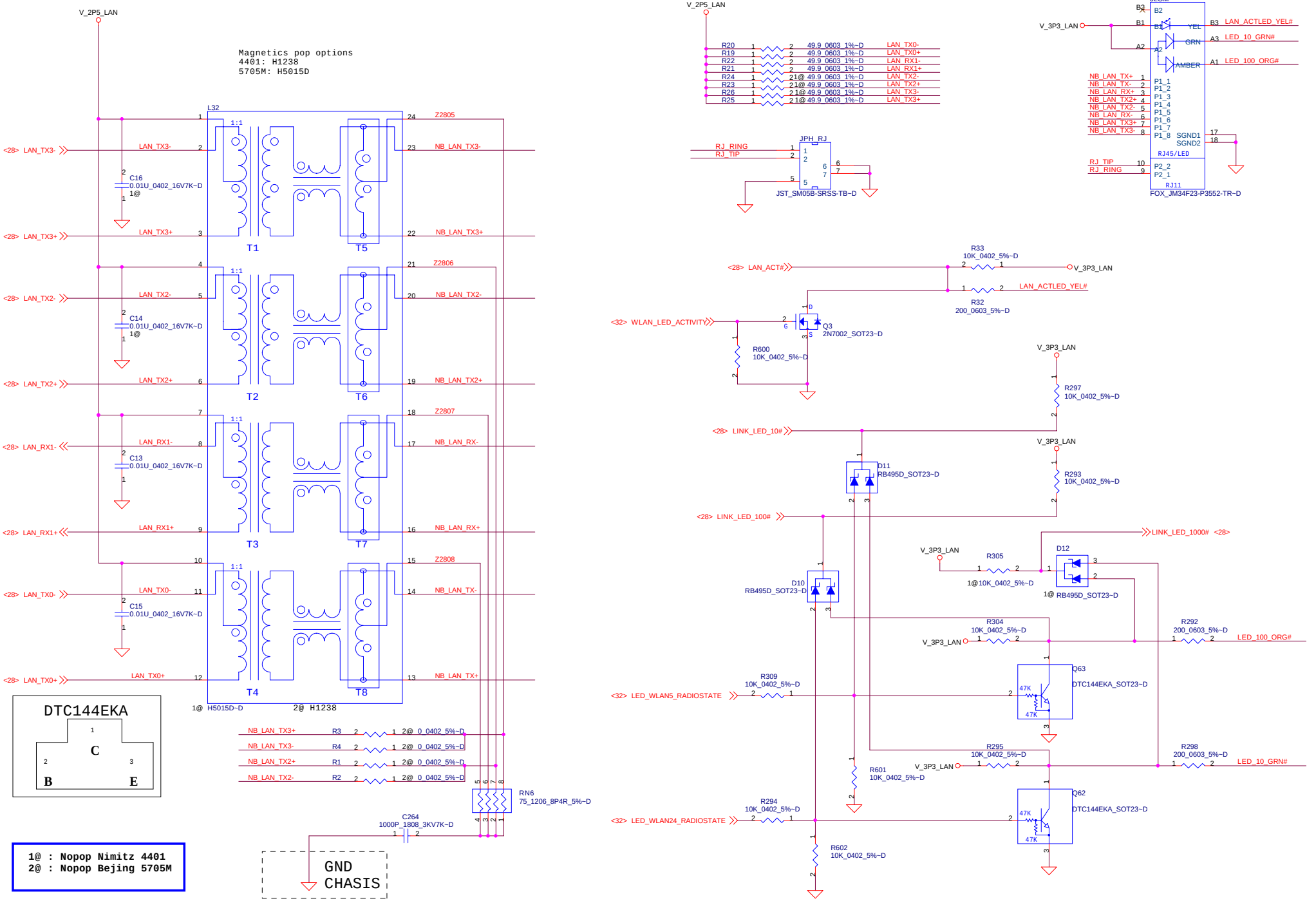

THIS SHEET OF ENGINEERING DRAWING IS THE PROPRIETARY PROPERTY OF COMPAL ELECTRONICS, INC. AND CONTAINS CONFIDENTIAL AND TRADE SECRET INFORMATION. THIS SHEET MAY NOT BE TRANSFERRED FROM THE CUSTODY OF THE COMPETENT DIVISION OF R&D DEPARTMENT EXCEPT AS AUTHORIZED BY COMPAL ELECTRONICS, INC. NEITHER THIS SHEET NOR THE INFORMATION IT CONTAINS MAY BE USED BY OR DISCLOSED TO ANY THIRD PARTY WITHOUT PRIOR WRITTEN CONSENT OF COMPAL ELECTRONICS, INC.

Compal Electronics, Inc.

Title: **LAN TRANSFOMER**

Size | Document Number: **LA-1711** | Rev: X00-G

Date: Tuesday, March 18, 2003 | Sheet 29 of 54

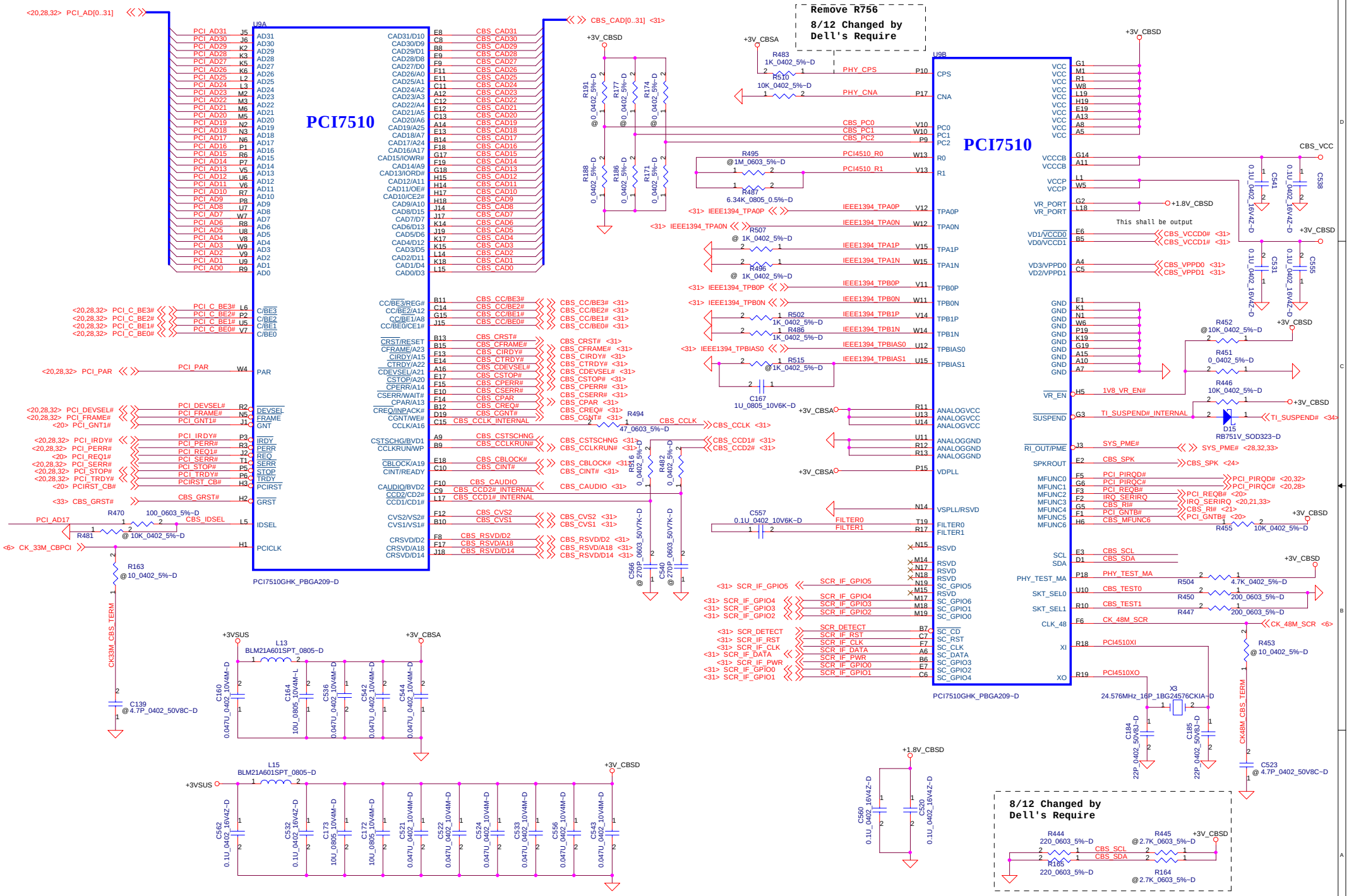

THIS SHEET OF ENGINEERING DRAWING IS THE PROPRIETARY PROPERTY OF COMPAL ELECTRONICS, INC. AND CONTAINS CONFIDENTIAL AND TRADE SECRET INFORMATION. THIS SHEET MAY NOT BE TRANSFERRED FROM THE CUSTODY OF THE COMPETENT DIVISION OF R&D DEPARTMENT EXCEPT AS AUTHORIZED BY COMPAL ELECTRONICS, INC. NEITHER THIS SHEET NOR THE INFORMATION IT CONTAINS MAY BE USED BY OR DISCLOSED TO ANY THIRD PARTY WITHOUT PRIOR WRITTEN CONSENT OF COMPAL ELECTRONICS, INC.

Compal Electronics, Inc.	
Title	PCMCIA Controller
Size	Document Number: LA-1711
Rev	X00-G
Date: Tuesday, March 18, 2003	Sheet 30 of 54

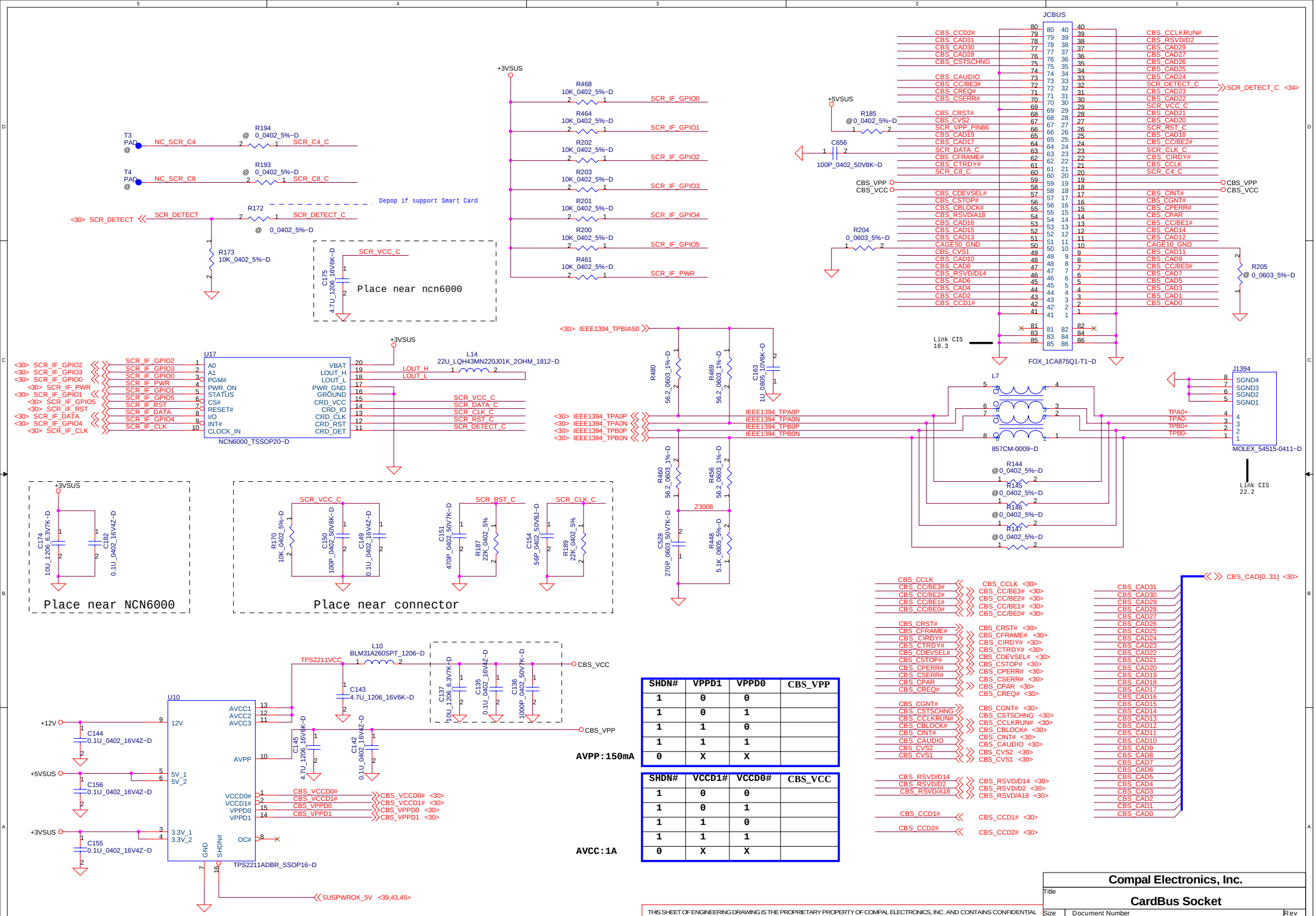

SHDN#	VPPD1	VPPD0	CBS_VPP
1	0	0	
1	0	1	
1	1	0	
1	1	1	
0	X	X	

SHDN#	VCCD1#	VCCD0#	CBS_VCC
1	0	0	
1	0	1	
1	1	0	
1	1	1	
0	X	X	

THIS SHEET OF ENGINEERING DRAWING IS THE PROPRIETARY PROPERTY OF COMPAL ELECTRONICS, INC. AND CONTAINS CONFIDENTIAL AND TRADE SECRET INFORMATION. THIS SHEET MAY NOT BE TRANSFERRED FROM THE CUSTODY OF THE COMPETENT DIVISION OF R&D DEPARTMENT EXCEPT AS AUTHORIZED BY COMPAL ELECTRONICS, INC. NEITHER THIS SHEET NOR THE INFORMATION IT CONTAINS MAY BE USED BY OR DISCLOSED TO ANY THIRD PARTY WITHOUT PRIOR WRITTEN CONSENT OF COMPAL ELECTRONICS, INC.

Compal Electronics, Inc.

Title: **CardBus Socket**

Size | Document Number: **LA-1711** | Rev: X00-G

Date: Tuesday, March 18, 2003 | Sheet 31 of 54

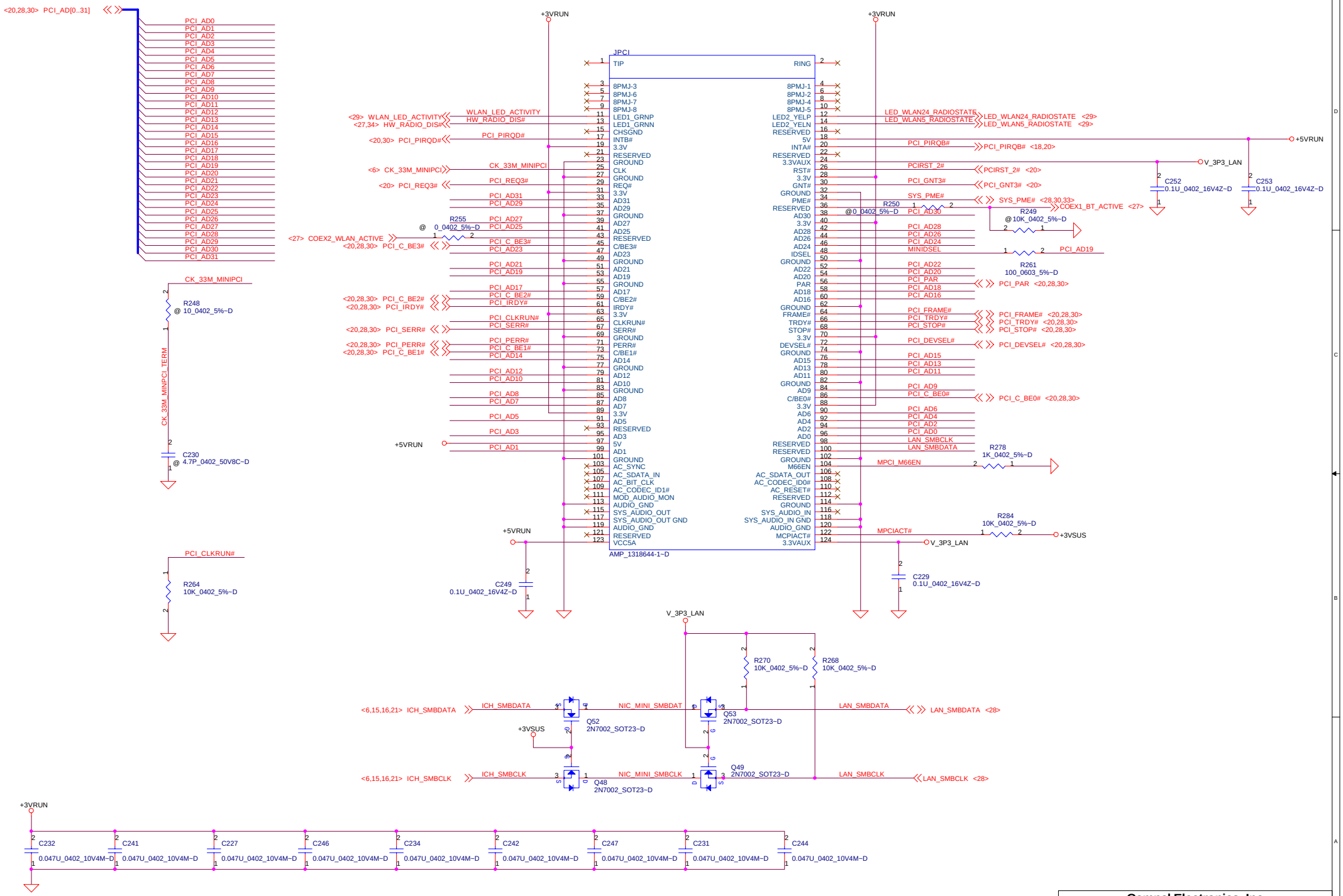

THIS SHEET OF ENGINEERING DRAWING IS THE PROPRIETARY PROPERTY OF COMPAL ELECTRONICS, INC. AND CONTAINS CONFIDENTIAL AND TRADE SECRET INFORMATION. THIS SHEET MAY NOT BE TRANSFERRED FROM THE CUSTODY OF THE COMPETENT DIVISION OF R&D DEPARTMENT EXCEPT AS AUTHORIZED BY COMPAL ELECTRONICS, INC. NEITHER THIS SHEET NOR THE INFORMATION IT CONTAINS MAY BE USED BY OR DISCLOSED TO ANY THIRD PARTY WITHOUT PRIOR WRITTEN CONSENT OF COMPAL ELECTRONICS, INC.

Compal Electronics, Inc.

Title: **MINIPCI**

Size: | Document Number: **LA-1711** | Rev: X00-G

Date: Tuesday, March 18, 2003 | Sheet 32 of 54

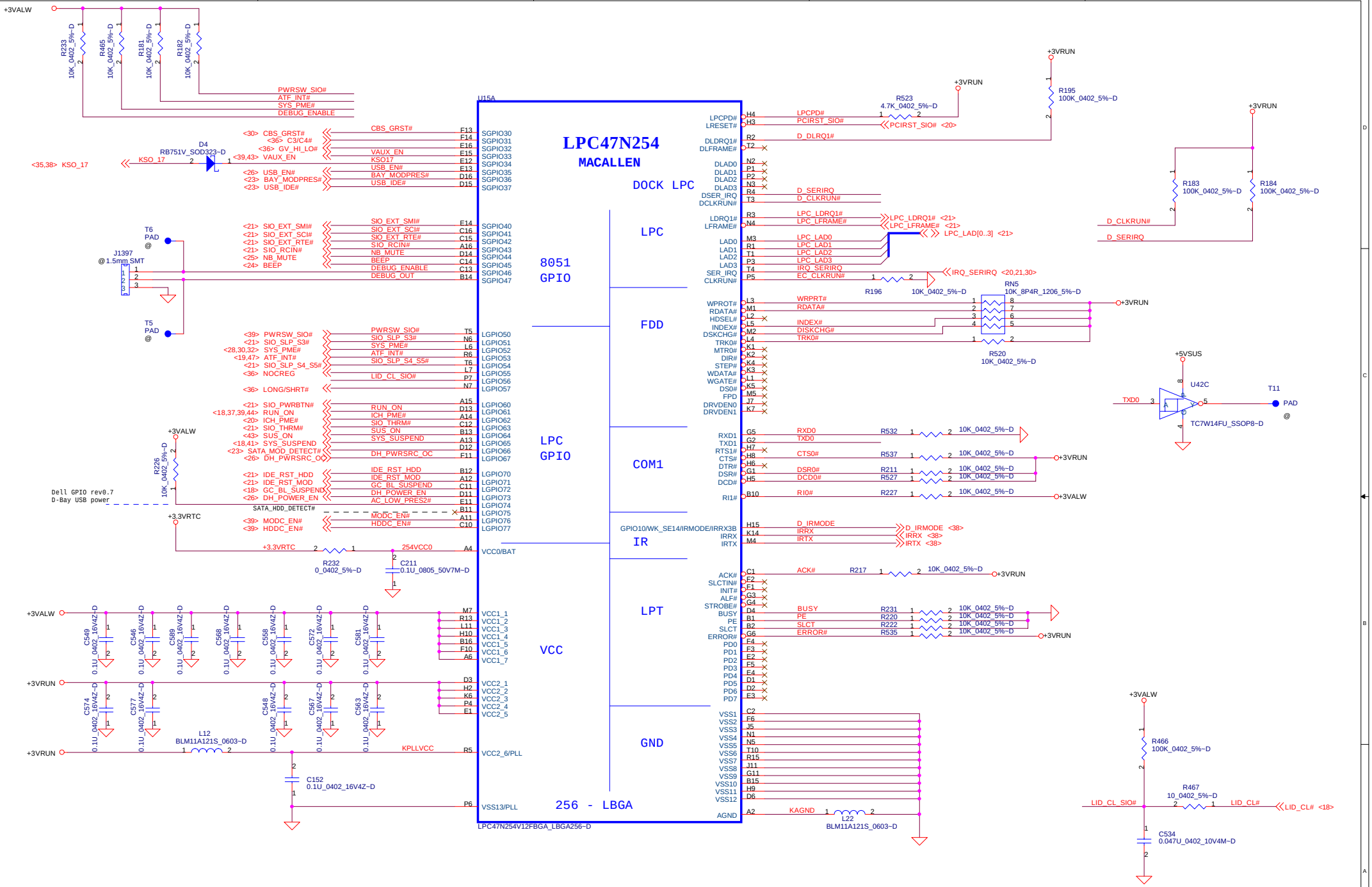

THIS SHEET OF ENGINEERING DRAWING IS THE PROPRIETARY PROPERTY OF COMPAL ELECTRONICS, INC. AND CONTAINS CONFIDENTIAL AND TRADE SECRET INFORMATION. THIS SHEET MAY NOT BE TRANSFERRED FROM THE CUSTODY OF THE COMPETENT DIVISION OF R&D DEPARTMENT EXCEPT AS AUTHORIZED BY COMPAL ELECTRONICS, INC. NEITHER THIS SHEET NOR THE INFORMATION IT CONTAINS MAY BE USED BY OR DISCLOSED TO ANY THIRD PARTY WITHOUT PRIOR WRITTEN CONSENT OF COMPAL ELECTRONICS, INC.

Compal Electronics, Inc.

Title: **SIO (1/2)**

Size | Document Number: **LA-1711** | Rev: X00-G

Date: Tuesday, March 18, 2003 | Sheet 33 of 54

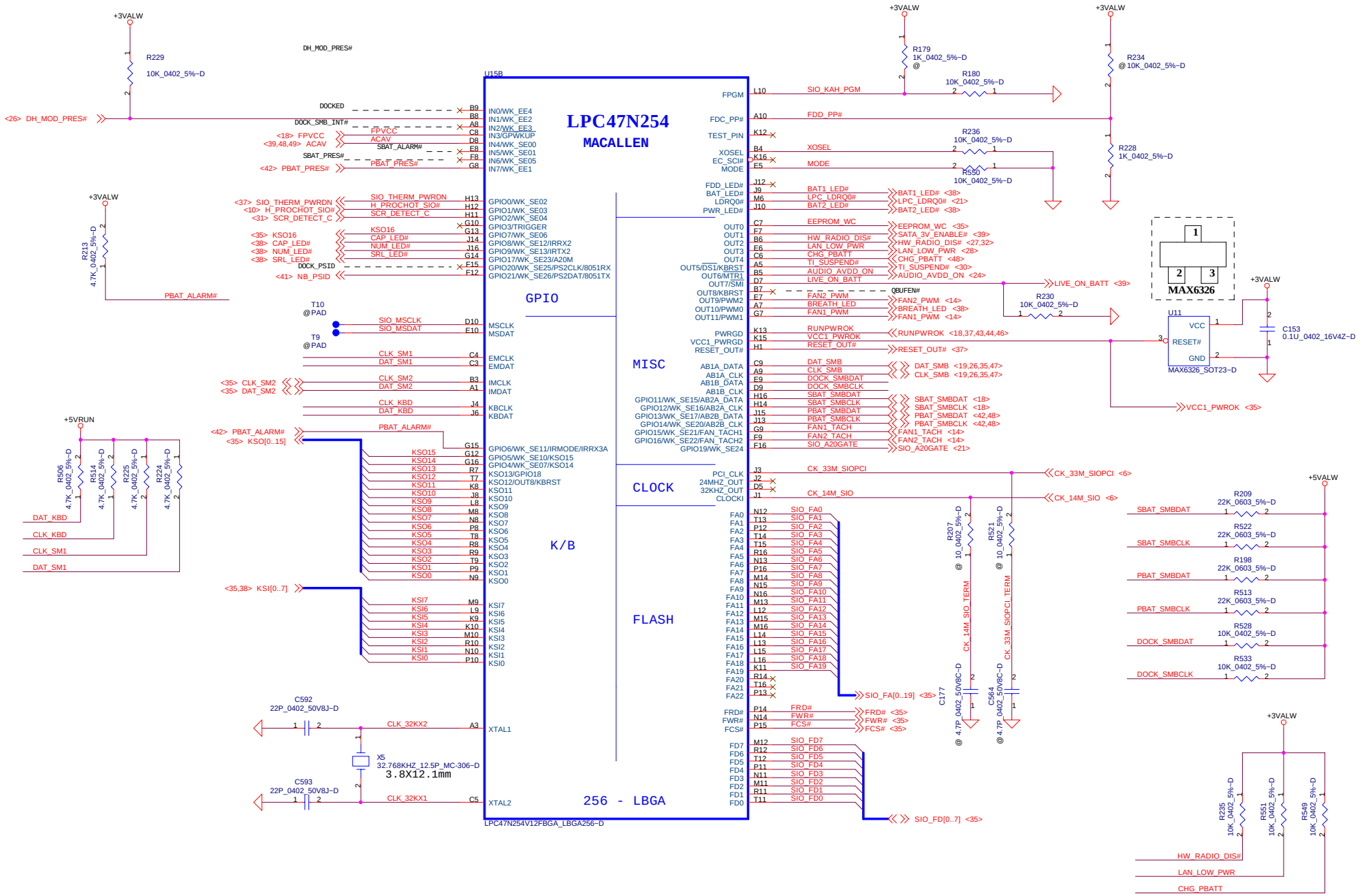

THIS SHEET OF ENGINEERING DRAWING IS THE PROPRIETARY PROPERTY OF COMPAL ELECTRONICS, INC. AND CONTAINS CONFIDENTIAL AND TRADE SECRET INFORMATION. THIS SHEET MAY NOT BE TRANSFERED FROM THE CUSTODY OF THE COMPETENT DIVISION OF R&D DEPARTMENT EXCEPT AS AUTHORIZED BY COMPAL ELECTRONICS, INC. NEITHER THIS SHEET NOR THE INFORMATION IT CONTAINS MAY BE USED BY OR DISCLOSED TO ANY THIRD PARTY WITHOUT PRIOR WRITTEN CONSENT OF COMPAL ELECTRONICS, INC.

Compal Electronics, Inc.	
Title	SIO (2/2)
Size	Document Number: LA-1711
Rev	X00-G
Date: Tuesday, March 18, 2003	Sheet 34 of 54

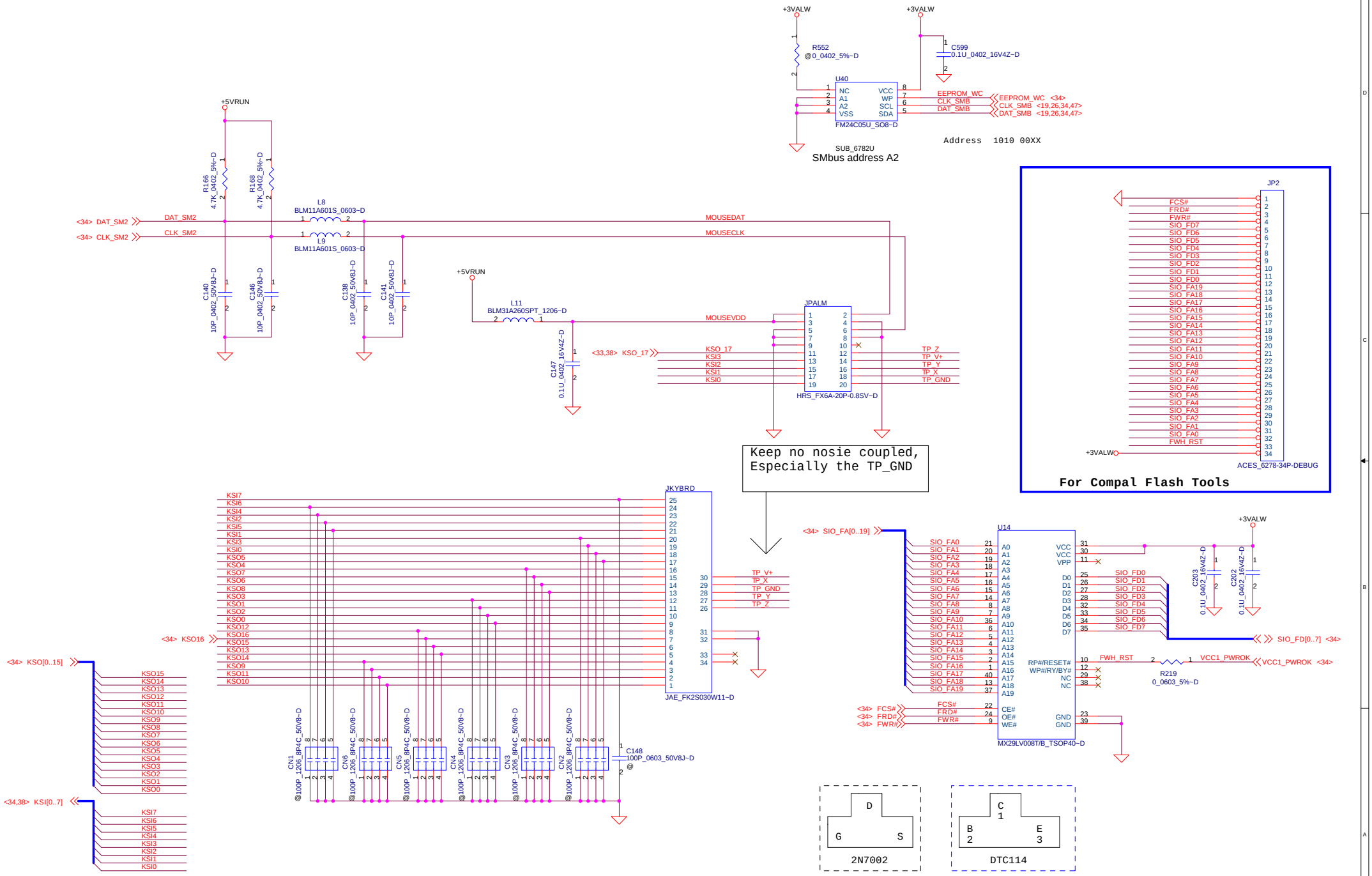

THIS SHEET OF ENGINEERING DRAWING IS THE PROPRIETARY PROPERTY OF COMPAL ELECTRONICS, INC. AND CONTAINS CONFIDENTIAL AND TRADE SECRET INFORMATION. THIS SHEET MAY NOT BE TRANSFERED FROM THE CUSTODY OF THE COMPETENT DIVISION OF R&D DEPARTMENT EXCEPT AS AUTHORIZED BY COMPAL ELECTRONICS, INC. NEITHER THIS SHEET NOR THE INFORMATION IT CONTAINS MAY BE USED BY OR DISCLOSED TO ANY THIRD PARTY WITHOUT PRIOR WRITTEN CONSENT OF COMPAL ELECTRONICS, INC.

Compal Electronics, Inc.	
Title	INT KB & ROM
Size	Document Number: LA-1711
Rev	X00-G
Date: Tuesday, March 18, 2003	Sheet 35 of 54

CPLD Function options Table

No.	Function	Speedstep enable	Speedstep disable
1	CPLD (U27)	Pop U27, C233, C606, R557,	Depop U27, JPLD, C233, C606, R557,
2	STPCLK# (From ICH to CPU)	Pop Q42, R254, Depop R259	Depop Q42, R254, Pop R259
3	CPUSLP# (From ICH to CPU)	Pop Q43, R561, Depop R251	Depop Q43, R561, Pop R251
4	VRMPWRGD (From Reset to ICH)	Depop R243	Pop R243
5	STP_AGP# (PLD to AGP)	Depop R96, Pop R98 (P.18)	Pop R96, Depop R98 (P.18)
6	CPUPREF# (From PLD to CPU)	Pop R380(P.8)	Depop R380 (P.8)
7	STPCPU_VR (From PLD to CPU Power)	Pop PR94, Depop PR95 (P.46)	Depop PR94, Pop PR95 (P.46)
8	DPRSLPVR (From PLD to CPU power)	Pop PR93, Depop PR92 (P.46)	Depop PR93, Pop PR92 (P.46)
9	PLD_WAKE# (From PLD to ICH)	Pop R141 (P.21)	Depop R141 (P.21)
10	PLD_DISABLE#	Pop R256, Depop R252	Depop R256, Pop R252
11	DPSLP#	Pop R76, R78(P.8)	Depop R76, R78(P.8)
12	PCI_PCIRST#(From ICH to PLD)	Pop R245	Depop R245
13	GV_HI_LO#	Pop R253	Depop R253

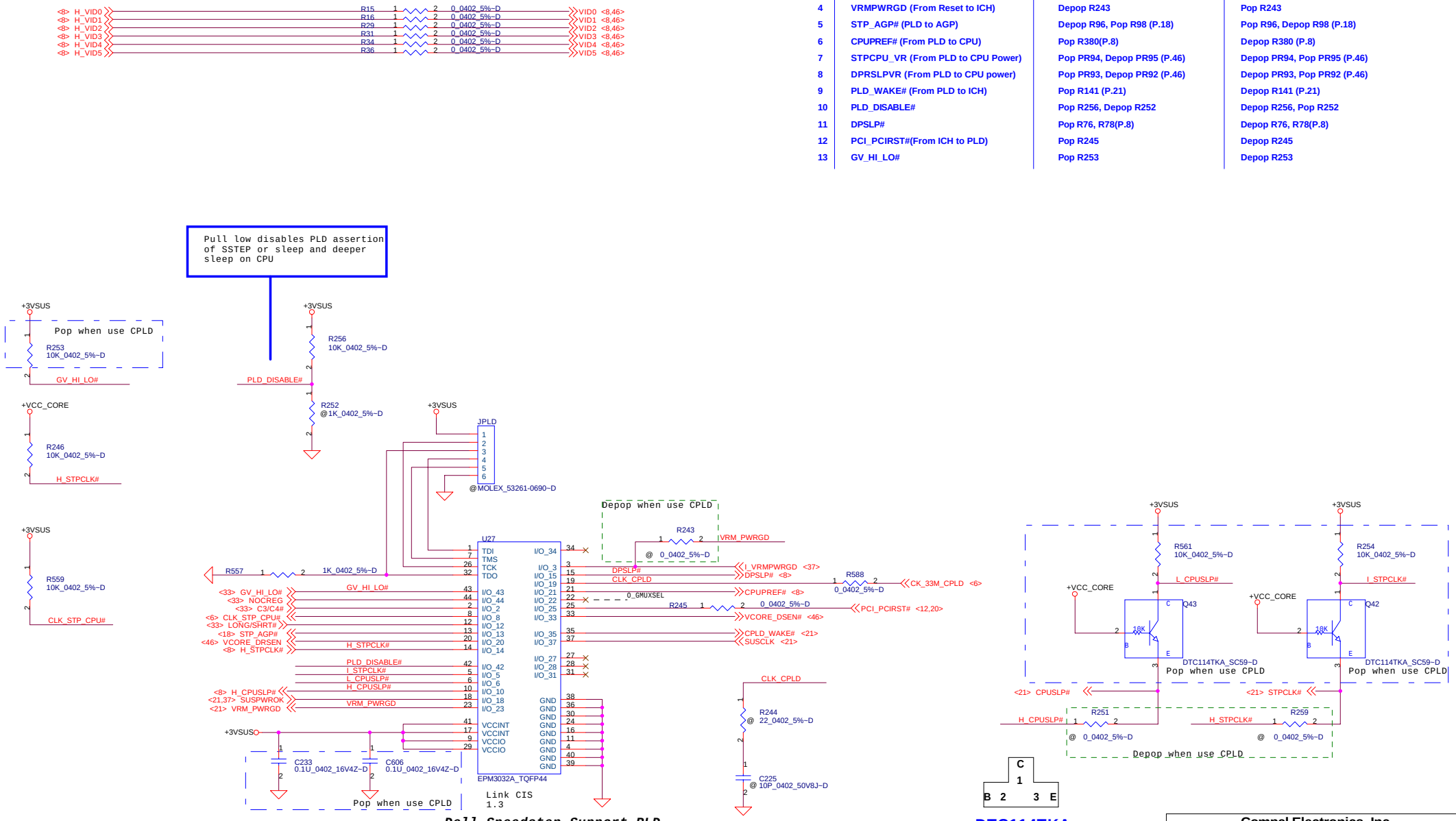

Dell Speedstep Support PLD

THIS SHEET OF ENGINEERING DRAWING IS THE PROPRIETARY PROPERTY OF COMPAL ELECTRONICS, INC. AND CONTAINS CONFIDENTIAL AND TRADE SECRET INFORMATION. THIS SHEET MAY NOT BE TRANSFERRED FROM THE CUSTODY OF THE COMPETENT DIVISION OF R&D DEPARTMENT EXCEPT AS AUTHORIZED BY COMPAL ELECTRONICS, INC. NEITHER THIS SHEET NOR THE INFORMATION IT CONTAINS MAY BE USED BY OR DISCLOSED TO ANY THIRD PARTY WITHOUT PRIOR WRITTEN CONSENT OF COMPAL ELECTRONICS, INC.

Compal Electronics, Inc.	
Title	PLD
Size	Document Number: LA-1711
Rev	X00-G
Date: Tuesday, March 18, 2003	Sheet 36 of 54

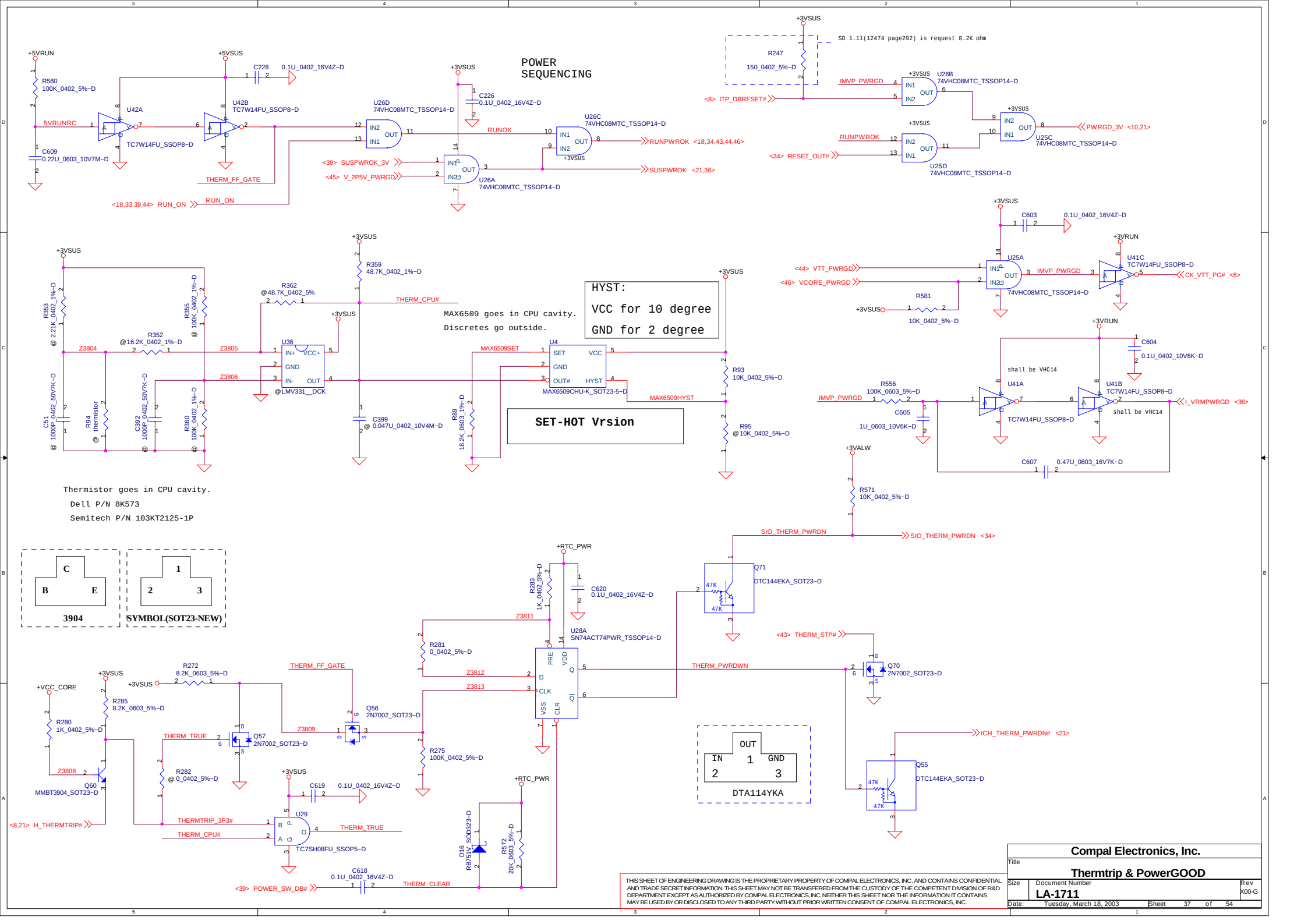

THIS SHEET OF ENGINEERING DRAWING IS THE PROPRIETARY PROPERTY OF COMPAL ELECTRONICS, INC. AND CONTAINS CONFIDENTIAL AND TRADE SECRET INFORMATION. THIS SHEET MAY NOT BE TRANSFERRED FROM THE CUSTODY OF THE COMPETENT DIVISION OF R&D DEPARTMENT EXCEPT AS AUTHORIZED BY COMPAL ELECTRONICS, INC. NEITHER THIS SHEET NOR THE INFORMATION IT CONTAINS MAY BE USED BY OR DISCLOSED TO ANY THIRD PARTY WITHOUT PRIOR WRITTEN CONSENT OF COMPAL ELECTRONICS, INC.

Compal Electronics, Inc.		
Title: Thermtrip & PowerGOOD		
Size	Document Number: LA-1711	Rev: X00-G
Date: Tuesday, March 18, 2003	Sheet 37 of 54	

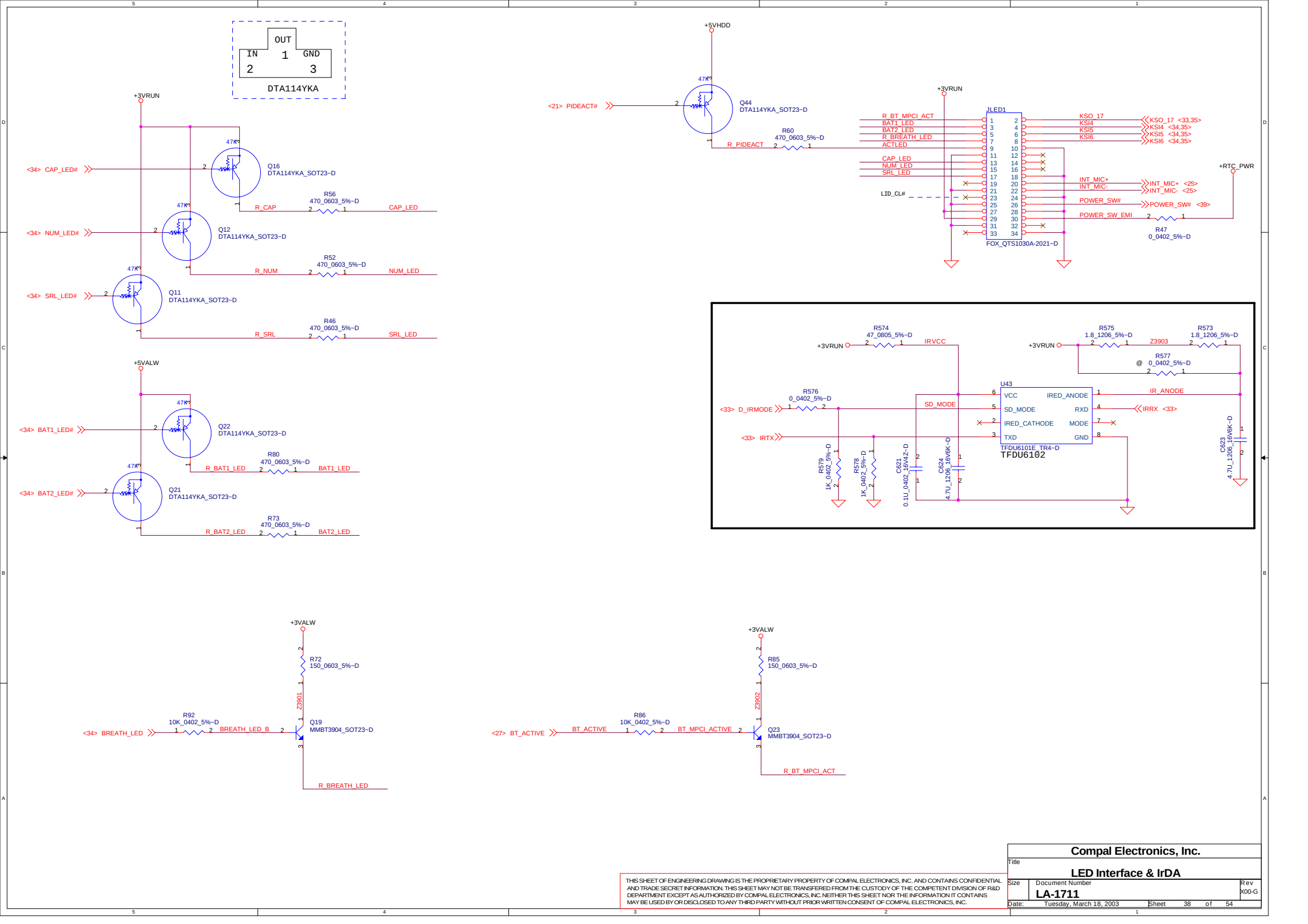

THIS SHEET OF ENGINEERING DRAWING IS THE PROPRIETARY PROPERTY OF COMPAL ELECTRONICS, INC. AND CONTAINS CONFIDENTIAL AND TRADE SECRET INFORMATION. THIS SHEET MAY NOT BE TRANSFERRED FROM THE CUSTODY OF THE COMPETENT DIVISION OF R&D DEPARTMENT EXCEPT AS AUTHORIZED BY COMPAL ELECTRONICS, INC. NEITHER THIS SHEET NOR THE INFORMATION IT CONTAINS MAY BE USED BY OR DISCLOSED TO ANY THIRD PARTY WITHOUT PRIOR WRITTEN CONSENT OF COMPAL ELECTRONICS, INC.

Compal Electronics, Inc.

Title: **LED Interface & IrDA**

Size | Document Number: **LA-1711** | Rev: X00-G

Date: Tuesday, March 18, 2003 | Sheet 38 of 54

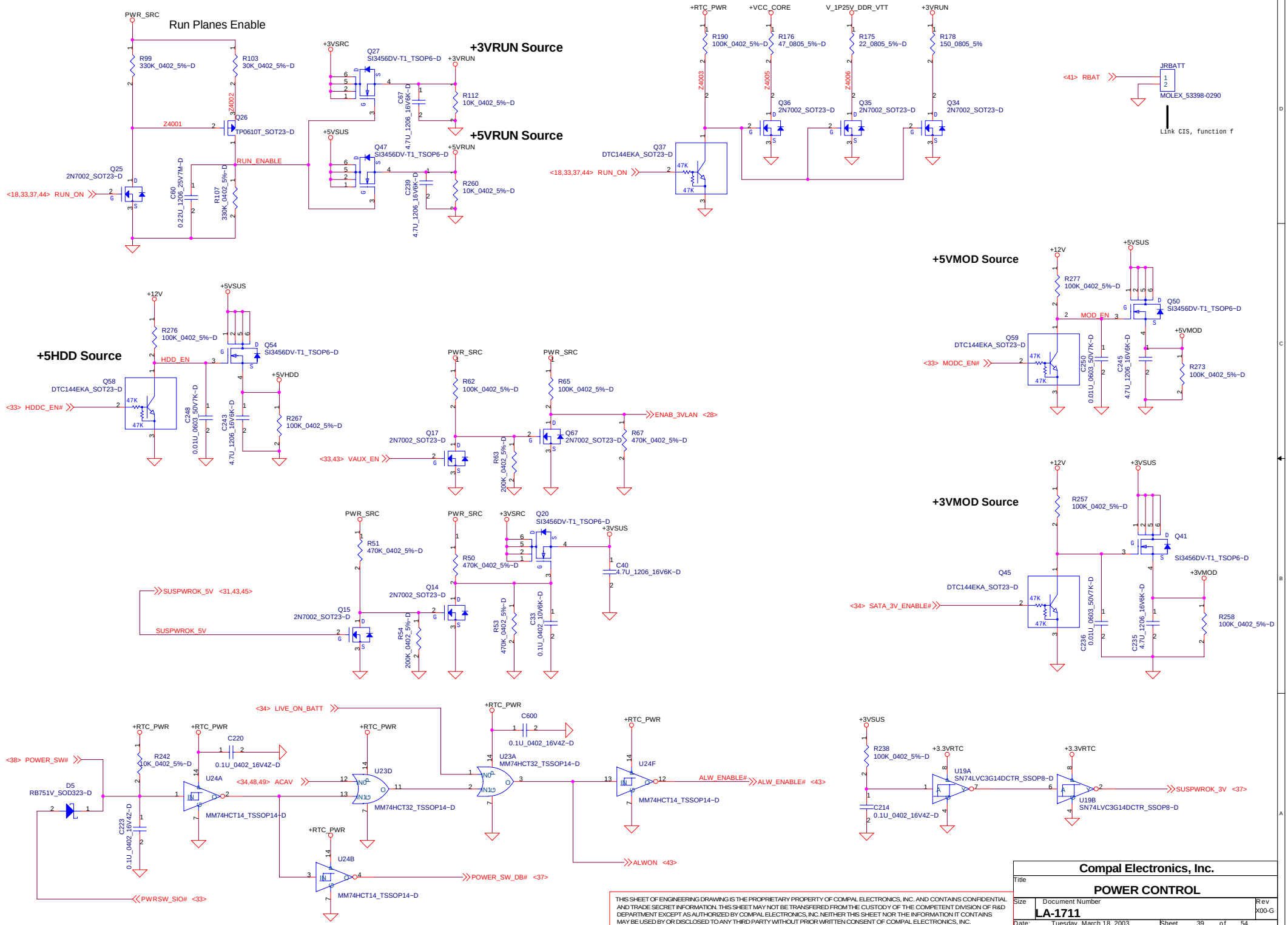

THIS SHEET OF ENGINEERING DRAWING IS THE PROPRIETARY PROPERTY OF COMPAL ELECTRONICS, INC. AND CONTAINS CONFIDENTIAL AND TRADE SECRET INFORMATION. THIS SHEET MAY NOT BE TRANSFERRED FROM THE CUSTODY OF THE COMPETENT DIVISION OF R&D DEPARTMENT EXCEPT AS AUTHORIZED BY COMPAL ELECTRONICS, INC. NEITHER THIS SHEET NOR THE INFORMATION IT CONTAINS MAY BE USED BY OR DISCLOSED TO ANY THIRD PARTY WITHOUT PRIOR WRITTEN CONSENT OF COMPAL ELECTRONICS, INC.

Compal Electronics, Inc.	
Title	POWER CONTROL
Size / Document Number	LA-1711
Rev	X00-G
Date: Tuesday, March 18, 2003	Sheet 39 of 54

CPU screw hole

H8 C315D110
H12 C315D110
H7 C315D110
H11 C315D110

PCMCIA Slot screw hole

H26 C197D91
H27 C197D91
H28 C197D91
H29 C197D91

Fiducial Mark

FD2 FIDUCIAL MARK
FD15 FIDUCIAL MARK
FD10 FIDUCIAL MARK
FD12 FIDUCIAL MARK
FD13 FIDUCIAL MARK
FD11 FIDUCIAL MARK
FD9 FIDUCIAL MARK
FD8 FIDUCIAL MARK
FD1 FIDUCIAL MARK
FD14 FIDUCIAL MARK
FD7 FIDUCIAL MARK
FD4 FIDUCIAL MARK
FD3 FIDUCIAL MARK
FD6 FIDUCIAL MARK
FD5 FIDUCIAL MARK
FD16 FIDUCIAL MARK
FD17 FIDUCIAL MARK
FD18 FIDUCIAL MARK
FD19 FIDUCIAL MARK

MCH screw hole

H6 C315D165
H9 C315D165
H5 C315D165
H23 C315D165

Others screw hole

H1 H_C99D79
H2 H_C150D110
H3 H_O115X177D95X157
H4 H_C150D110

VGA Conn. screw hole

H10 C315D165

H22 C150D110
H21 C150D110
H19 H_O115X177D95X157
H20 C150D110

H17 C315D110
H16 C315D110
H30 C315D110
H31 C315D110
H32 C315D110
H33 C315D110

MDC

H15 C217D157

FAN Conn. screw hole

H24 C315D165
H25 C315D165

PCB

PCB LA1711

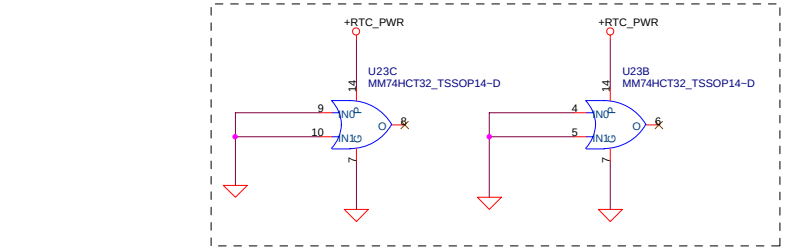

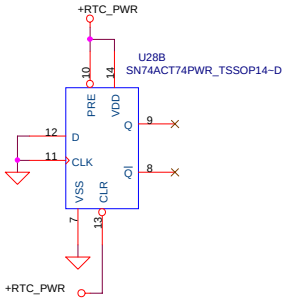

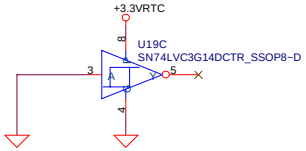

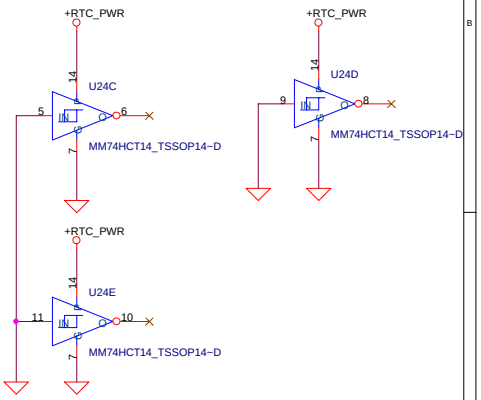

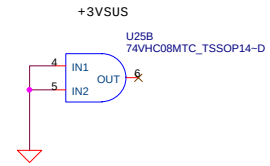

THIS SHEET OF ENGINEERING DRAWING IS THE PROPRIETARY PROPERTY OF COMPAL ELECTRONICS, INC. AND CONTAINS CONFIDENTIAL AND TRADE SECRET INFORMATION. THIS SHEET MAY NOT BE TRANSFERRED FROM THE CUSTODY OF THE COMPETENT DIVISION OF R&D DEPARTMENT EXCEPT AS AUTHORIZED BY COMPAL ELECTRONICS, INC. NEITHER THIS SHEET NOR THE INFORMATION IT CONTAINS MAY BE USED BY OR DISCLOSED TO ANY THIRD PARTY WITHOUT PRIOR WRITTEN CONSENT OF COMPAL ELECTRONICS, INC.

Compal Electronics, Inc.	
Title	PAD,Screw Hole and Spare Parts
Size / Document Number	LA-1711
Rev	X00-G
Date: Tuesday, March 18, 2003	Sheet 40 of 54

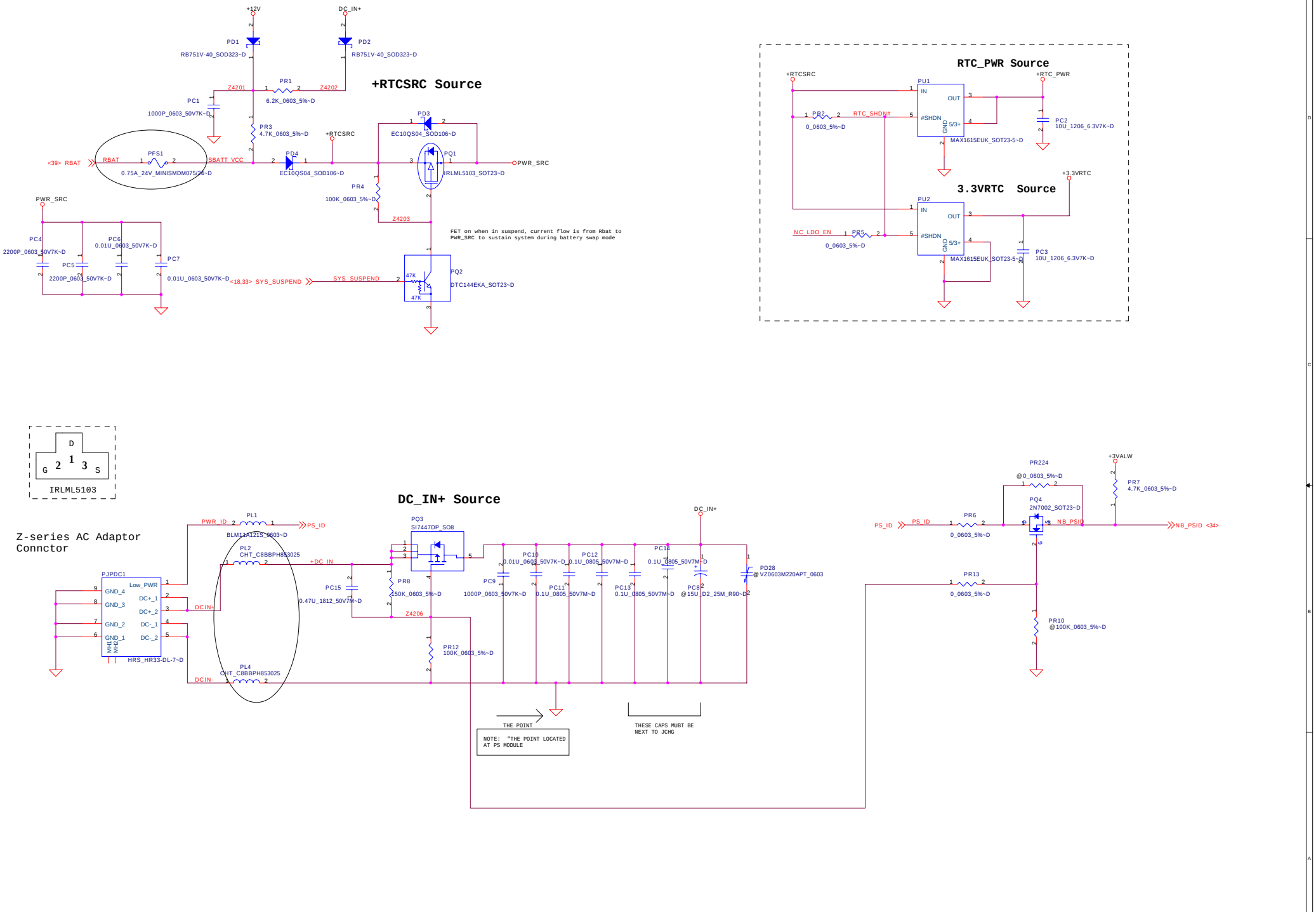

THIS SHEET OF ENGINEERING DRAWING IS THE PROPRIETARY PROPERTY OF COMPAL ELECTRONICS, INC. AND CONTAINS CONFIDENTIAL AND TRADE SECRET INFORMATION. THIS SHEET MAY NOT BE TRANSFERED FROM THE CUSTODY OF THE COMPETENT DIVISION OF R&D DEPARTMENT EXCEPT AS AUTHORIZED BY COMPAL ELECTRONICS, INC. NEITHER THIS SHEET NOR THE INFORMATION IT CONTAINS MAY BE USED BY OR DISCLOSED TO ANY THIRD PARTY WITHOUT PRIOR WRITTEN CONSENT OF COMPAL ELECTRONICS, INC.

Compal Electronics, Inc.		
Title: DC-IN		
Size	Document Number: LA-1711	Rev: X00-G
Date: Tuesday, March 18, 2003	Sheet 41 of 54	

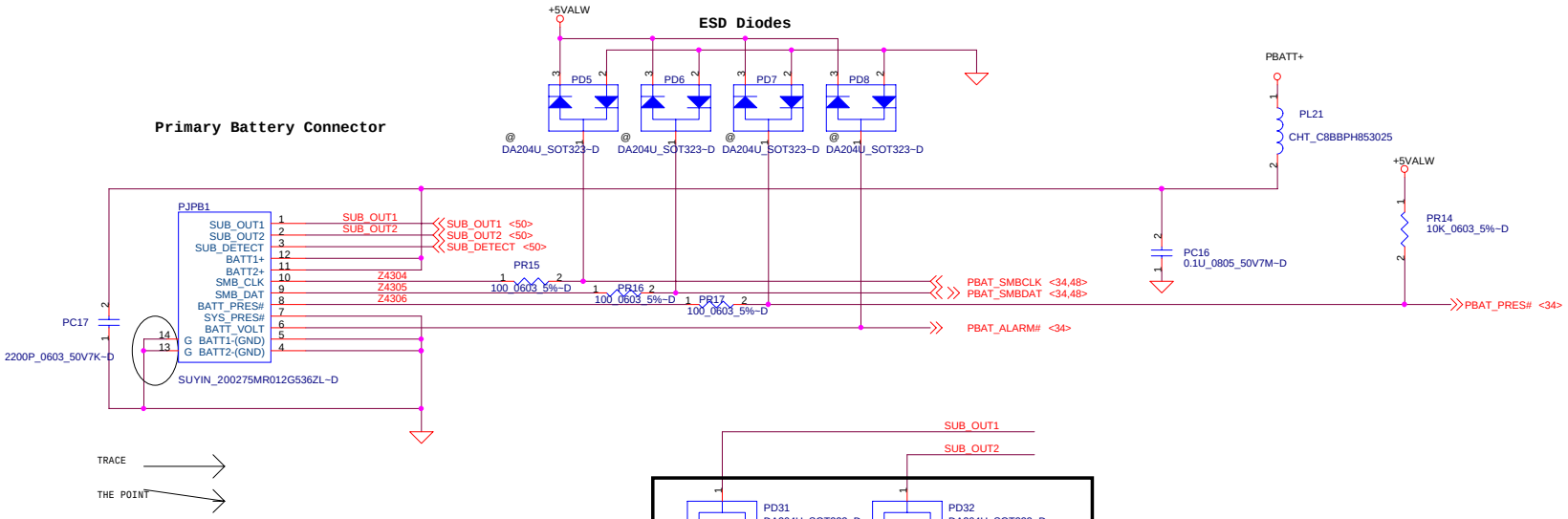

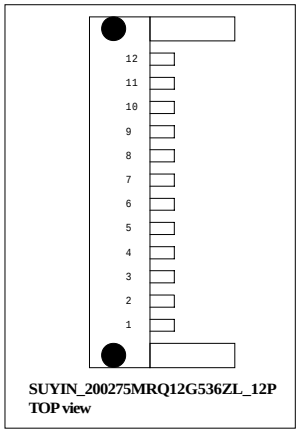

THIS SHEET OF ENGINEERING DRAWING IS THE PROPRIETARY PROPERTY OF COMPAL ELECTRONICS, INC. AND CONTAINS CONFIDENTIAL AND TRADE SECRET INFORMATION. THIS SHEET MAY NOT BE TRANSFERRED FROM THE CUSTODY OF THE COMPETENT DIVISION OF R&D DEPARTMENT EXCEPT AS AUTHORIZED BY COMPAL ELECTRONICS, INC. NEITHER THIS SHEET NOR THE INFORMATION IT CONTAINS MAY BE USED BY OR DISCLOSED TO ANY THIRD PARTY WITHOUT PRIOR WRITTEN CONSENT OF COMPAL ELECTRONICS, INC.

Compal Electronics, Inc.		
Title: Battery CONN.		
Size	Document Number: LA-1711	Rev: X00-G
Date: Tuesday, March 18, 2003	Sheet 42 of 54	

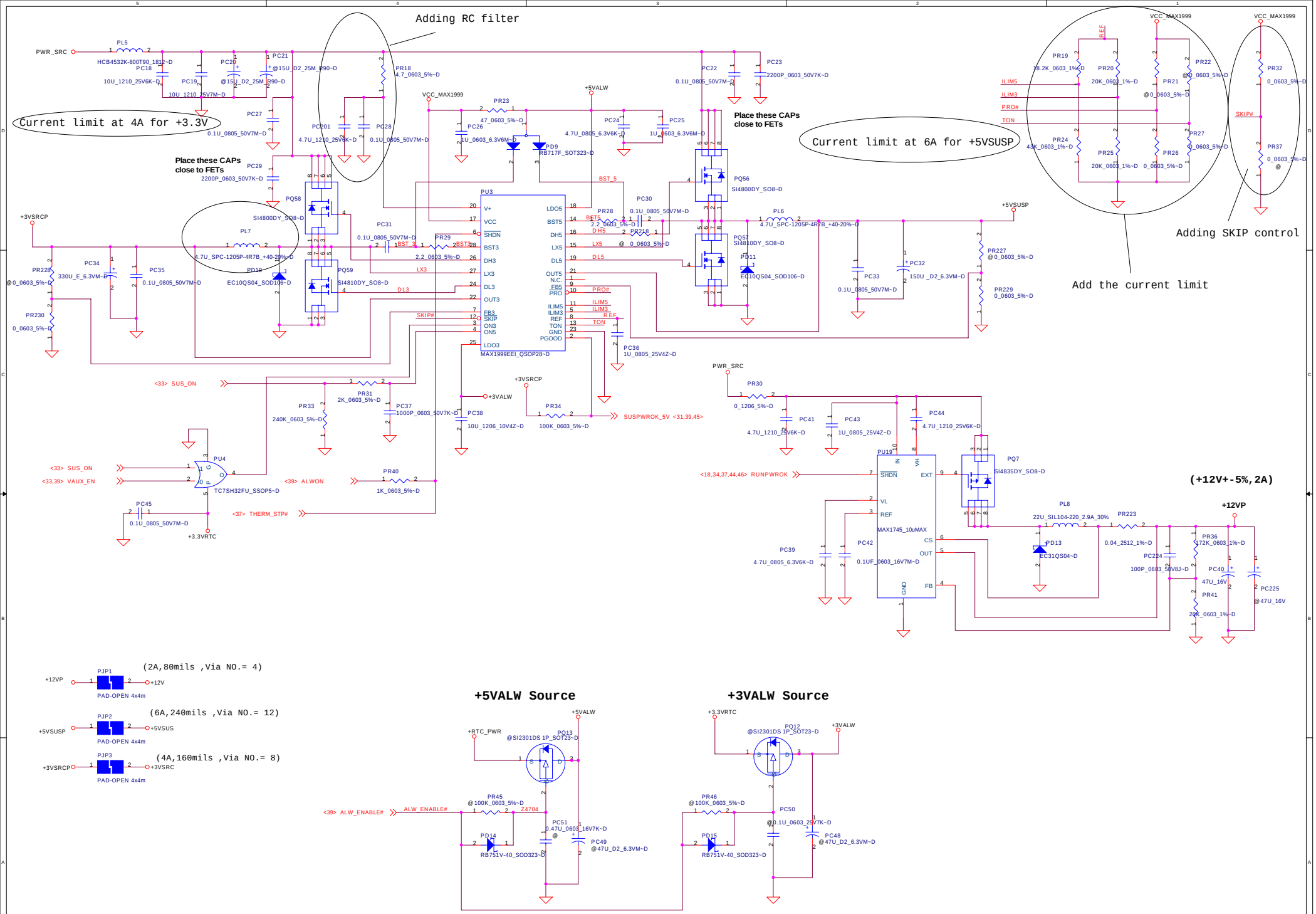

THIS SHEET OF ENGINEERING DRAWING IS THE PROPRIETARY PROPERTY OF COMPAL ELECTRONICS, INC. AND CONTAINS CONFIDENTIAL AND TRADE SECRET INFORMATION. THIS SHEET MAY NOT BE TRANSFERED FROM THE CUSTODY OF THE COMPETENT DIVISION OF R&D DEPARTMENT EXCEPT AS AUTHORIZED BY COMPAL ELECTRONICS, INC. NEITHER THIS SHEET NOR THE INFORMATION IT CONTAINS MAY BE USED BY OR DISCLOSED TO ANY THIRD PARTY WITHOUT PRIOR WRITTEN CONSENT OF COMPAL ELECTRONICS, INC.

Compal Electronics, Inc.			
Title: 3.3V/5V			
Size	Document Number: LA-1711		Rev: X00-G
Date: Tuesday, March 18, 2003	Sheet 43 of 54		

+1.5VRUNP/+VTT_GMCHP

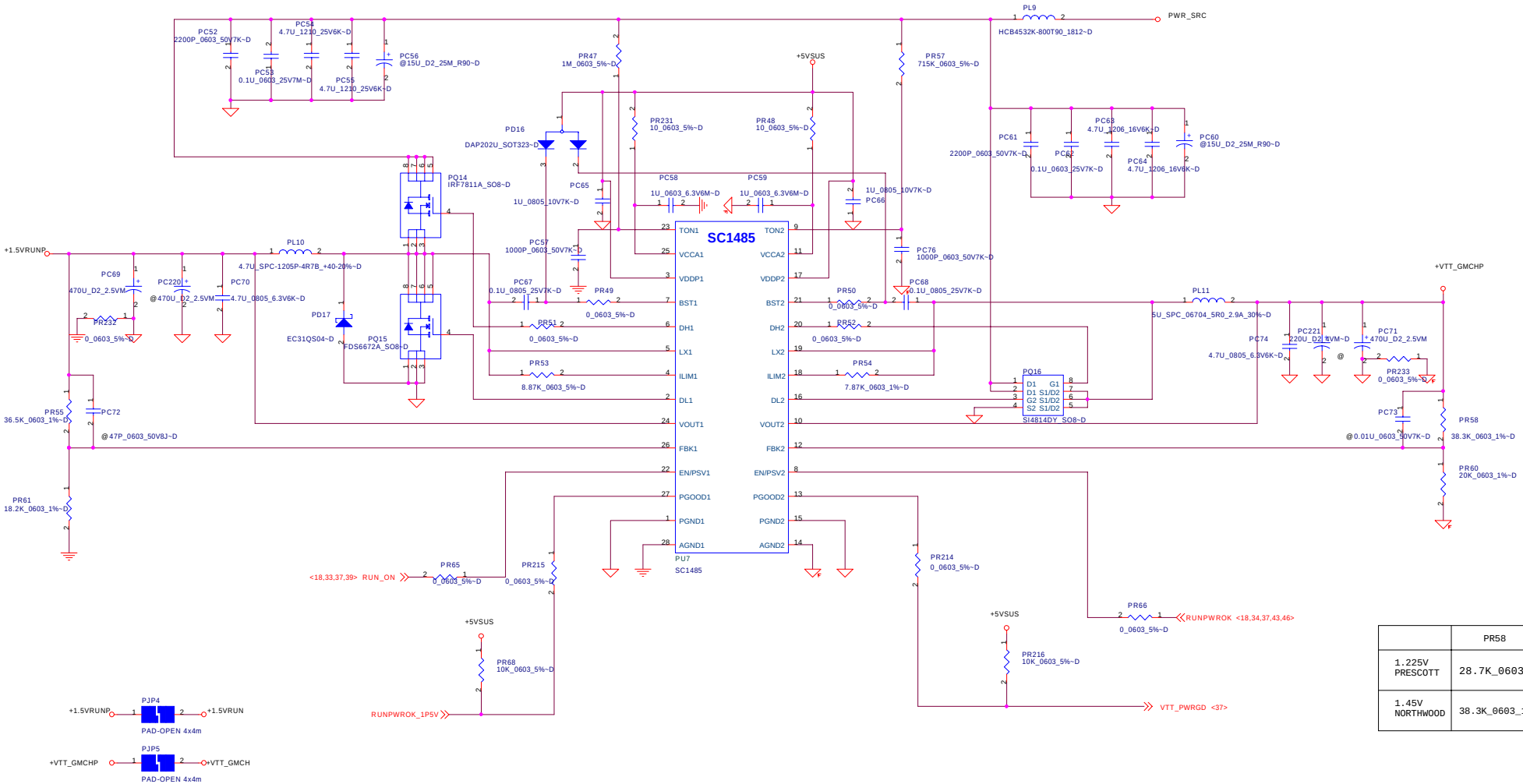

	PR58
1.225V PRESCOTT	28.7K_0603_1%
1.45V NORTHWOOD	38.3K_0603_1%

Dell-Compal Confidential

Compal Electronics, Inc.

Title: **+1.5VRUNP & +VTT_GMCHP**

Size: B | Document Number: LA-1711 | Rev: X00-G

Date: Tuesday, March 18, 2003 | Sheet 44 of 54

THIS SHEET OF ENGINEERING DRAWING IS THE PROPRIETARY PROPERTY OF COMPAL ELECTRONICS, INC. AND CONTAINS CONFIDENTIAL AND TRADE SECRET INFORMATION. THIS SHEET MAY NOT BE TRANSFERED FROM THE CUSTODY OF THE COMPETENT DIVISION OF R&D DEPARTMENT EXCEPT AS AUTHORIZED BY COMPAL ELECTRONICS, INC. NEITHER THIS SHEET NOR THE INFORMATION IT CONTAINS MAY BE USED BY OR DISCLOSED TO ANY THIRD PARTY WITHOUT PRIOR WRITTEN CONSENT OF COMPAL ELECTRONICS, INC.

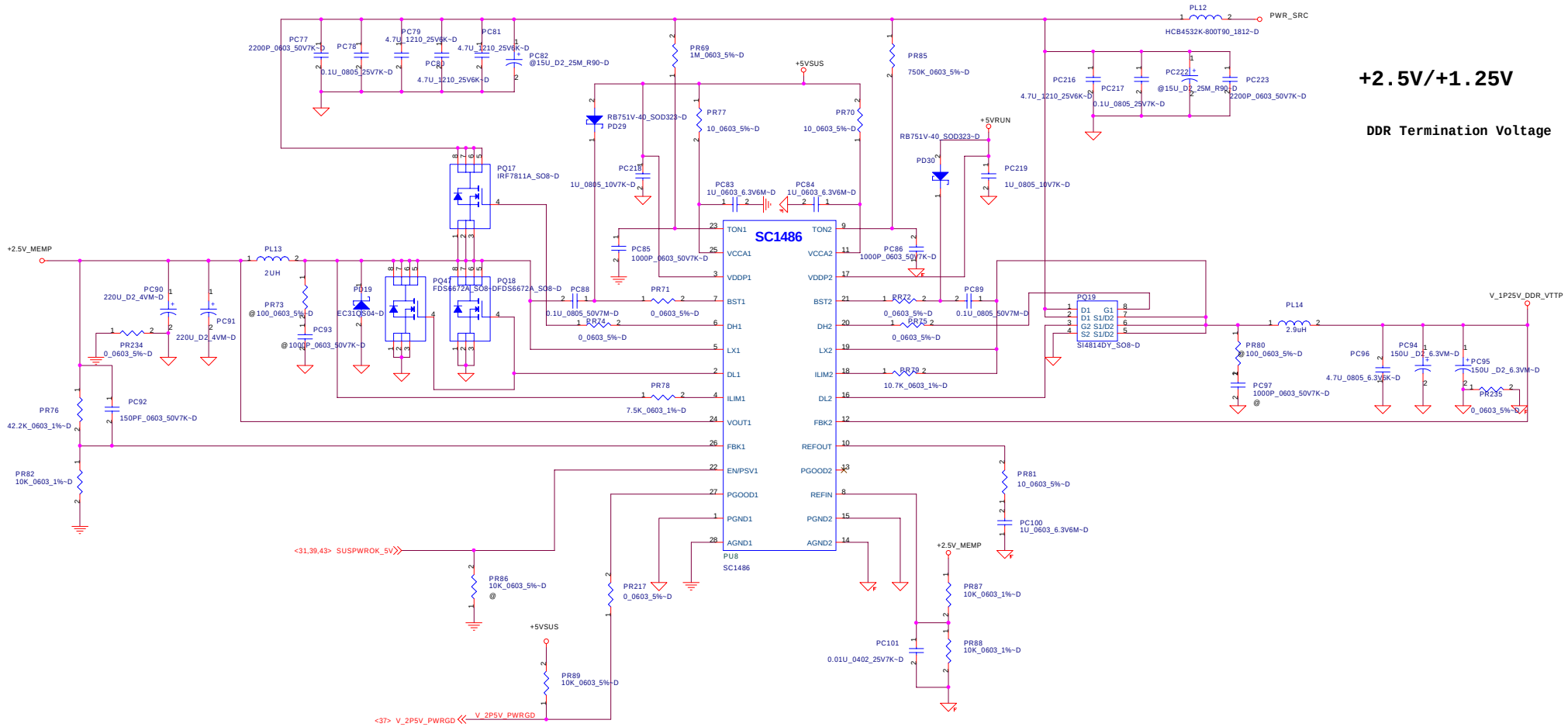

THIS SHEET OF ENGINEERING DRAWING IS THE PROPRIETARY PROPERTY OF COMPAL ELECTRONICS, INC. AND CONTAINS CONFIDENTIAL AND TRADE SECRET INFORMATION. THIS SHEET MAY NOT BE TRANSFERED FROM THE CUSTODY OF THE COMPETENT DIVISION OF R&D DEPARTMENT EXCEPT AS AUTHORIZED BY COMPAL ELECTRONICS, INC. NEITHER THIS SHEET NOR THE INFORMATION IT CONTAINS MAY BE USED BY OR DISCLOSED TO ANY THIRD PARTY WITHOUT PRIOR WRITTEN CONSENT OF COMPAL ELECTRONICS, INC.

Compal Electronics, Inc.		
Title: 1.25V/2.5V		
Size	Document Number: LA-1711	Rev: X00-G
Date: Tuesday, March 18, 2003	Sheet 45 of 54	

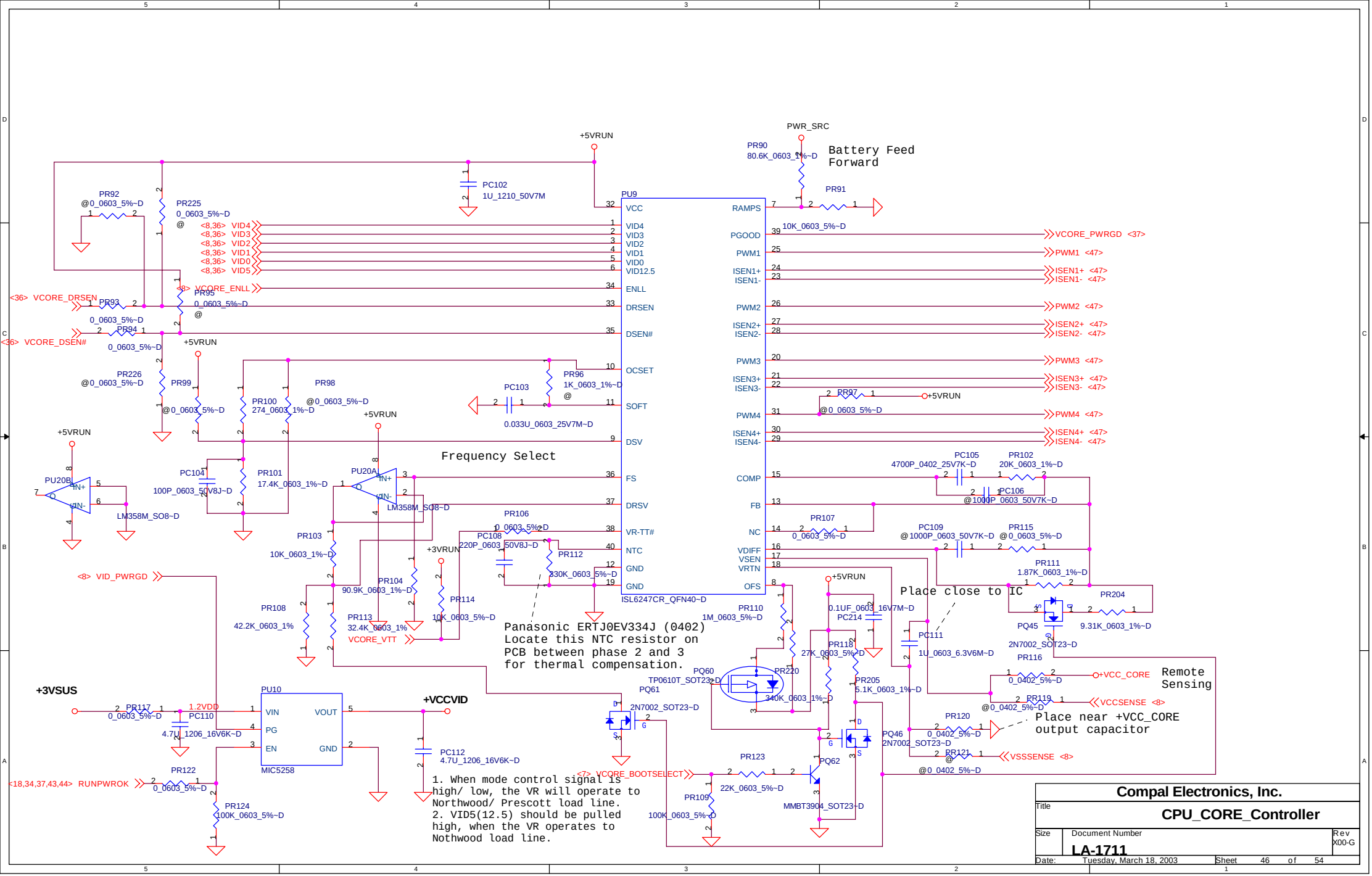
PU9
ISL6247CR_QFN40~D
VCC
VID4
VID3
VID2
VID1
VID0
VID12.5
ENLL
DRSEN
DSEN#
OCSET
SOFT
DSV
FS
DRSV
VR-TT#
NTC
GND
GND
RAMPS
PGOOD
PWM1
ISEN1+
ISEN1-
PWM2
ISEN2+
ISEN2-
PWM3
ISEN3+
ISEN3-
PWM4
ISEN4+
ISEN4-
COMP
FB
NC
VDIFF
VSEN
VRTN
OFS
+5VRUN
PWR_SRC
PR90
80.6K_0603_1%~D
Battery Feed Forward
PR91
10K_0603_5%~D
VCORE_PWRGD <37>
PWM1 <47>
ISEN1+ <47>
ISEN1- <47>
PWM2 <47>
ISEN2+ <47>
ISEN2- <47>
PWM3 <47>
ISEN3+ <47>
ISEN3- <47>
PWM4 <47>
ISEN4+ <47>
ISEN4- <47>
PR97
@0_0603_5%~D
PC102
1U_1210_50V7M
PR92
@0_0603_5%~D
PR225
0_0603_5%~D
@
<8,36> VID4
<8,36> VID3
<8,36> VID2
<8,36> VID1
<8,36> VID0
<8,36> VID5
<8> VCORE_ENLL
<36> VCORE_DRSEN
PR93
0_0603_5%~D
PR95
0_0603_5%~D
@
<36> VCORE_DSEN#
PR94
0_0603_5%~D
PR226
@0_0603_5%~D
PR99
@0_0603_5%~D
PR100
274_0603_1%~D
PR98
@0_0603_5%~D
PR96
1K_0603_1%~D
@
PC103
0.033U_0603_25V7M~D
PU20B
PU20A
LM358M_SO8~D
PC104
100P_0603_50V8J~D
PR101
17.4K_0603_1%~D
Frequency Select
PR103
10K_0603_1%~D
PR104
90.9K_0603_1%~D
PR106
0_0603_5%~D
PC108
220P_0603_50V8J~D
PR112
330K_0603_5%~D
+3VRUN
PR114
10K_0603_5%~D
PR108
42.2K_0603_1%
PR113
32.4K_0603_1%
VCORE_VTT
<8> VID_PWRGD
Panasonic ERTJ0EV334J (0402)
Locate this NTC resistor on
PCB between phase 2 and 3
for thermal compensation.
PC105
4700P_0402_25V7K~D
PR102
20K_0603_1%~D
PC106
@1000P_0603_50V7K~D
PR107
0_0603_5%~D
PC109
@1000P_0603_50V7K~D
PR115
@0_0603_5%~D
PR111
1.87K_0603_1%~D
PR204
9.31K_0603_1%~D
PQ45
2N7002_SOT23~D
Place close to IC
PC111
1U_0603_6.3V6M~D
PR110
1M_0603_5%~D
0.1UF_0603_16V7M~D
PC214
PR118
27K_0603_5%~D
PR205
5.1K_0603_1%~D
PQ60
TP0610T_SOT23~D
PQ61
2N7002_SOT23~D
PR220
340K_0603_1%~D
PR116
0_0402_5%~D
+VCC_CORE
Remote Sensing
PR119
@0_0402_5%~D
VCCSENSE <8>
PR120
0_0402_5%~D
Place near +VCC_CORE output capacitor
PQ46
2N7002_SOT23~D
PR121
@0_0402_5%~D
VSSSENSE <8>
PQ62
MMBT3904_SOT23~D
PR123
22K_0603_5%~D
PR109
100K_0603_5%~D
<7> VCORE_BOOTSELECT
+3VSUS
PR117
0_0603_5%~D
1.2VDD
PC110
4.7U_1206_16V6K~D
PU10
MIC5258
VIN
PG
EN
VOUT
GND
+VCCVID
PC112
4.7U_1206_16V6K~D
PR122
0_0603_5%~D
<18,34,37,43,44> RUNPWROK
PR124
100K_0603_5%~D
1. When mode control signal is high/ low, the VR will operate to Northwood/ Prescott load line.
2. VID5(12.5) should be pulled high, when the VR operates to Nothwood load line.
Compal Electronics, Inc.
Title
CPU_CORE_Controller
Size
Document Number
LA-1711
Rev
X00-G
Date: Tuesday, March 18, 2003
Sheet 46 of 54

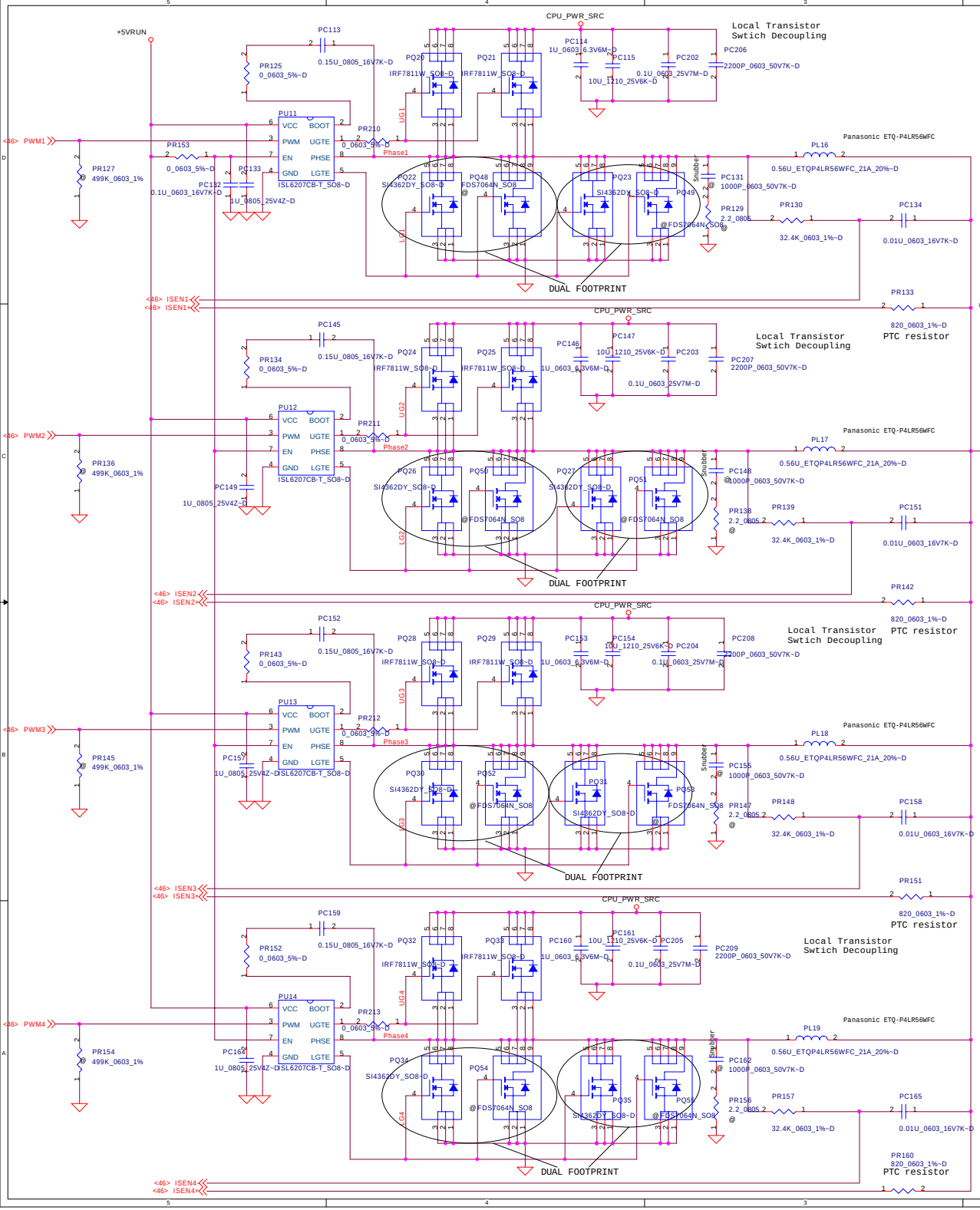

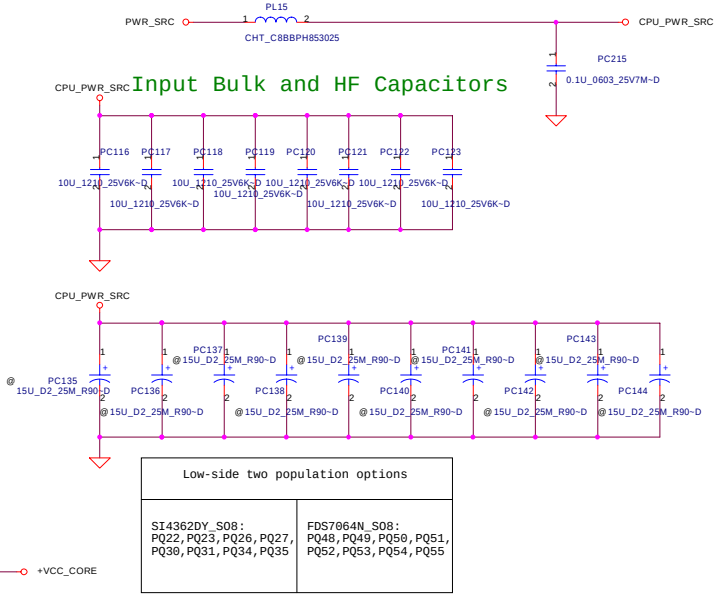

Low-side two population options	
SI4362DY_SO8: PQ22,PQ23,PQ26,PQ27, PQ30,PQ31,PQ34,PQ35	FDS7064N_SO8: PQ48,PQ49,PQ50,PQ51, PQ52,PQ53,PQ54,PQ55

Address select(7414ART-0)
Float: 1001 000
GND: 1001 001
VDD: 1001 010

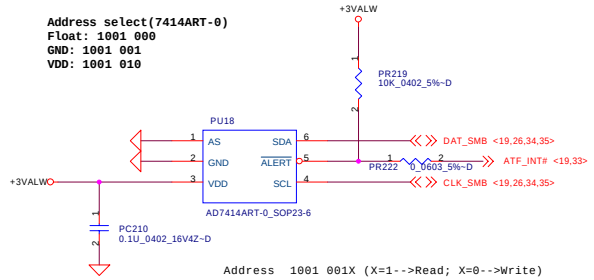

Notes:

The ISL6561(ISL6427) supports lossless current sensing including Inductor DCR and MOSFET rDSon sensing. Schematic components are color coded accordingly. In addition an external sense resistor can be used for higher load-line accuracy but this will impact system cost and efficiency.

Sync. Rectifiers use thermally enhanced "PowerPak" technology in an SO-8 form-factor. Optimal MOSFETS will be chosen based on thermal performance.

Depending on the processor final requirments and empirical thermal result testing a 3 phase solution may be possible. In the 4 phase configuration a single upper mosfet may also be sufficient.

Add thermal venting vias to board. Vias under parts must have a minimum pitch of 1mm and hole size of 0.3mm to avoid solder wicking.

DCR
Inductor
Sensing

Compal Electronics, Inc.		
Title: CPU_CORE_Power-Stage		
Size	Document Number: LA-1711	Rev: X00-G
Date: Tuesday, March 18, 2003	Sheet 47 of 54	

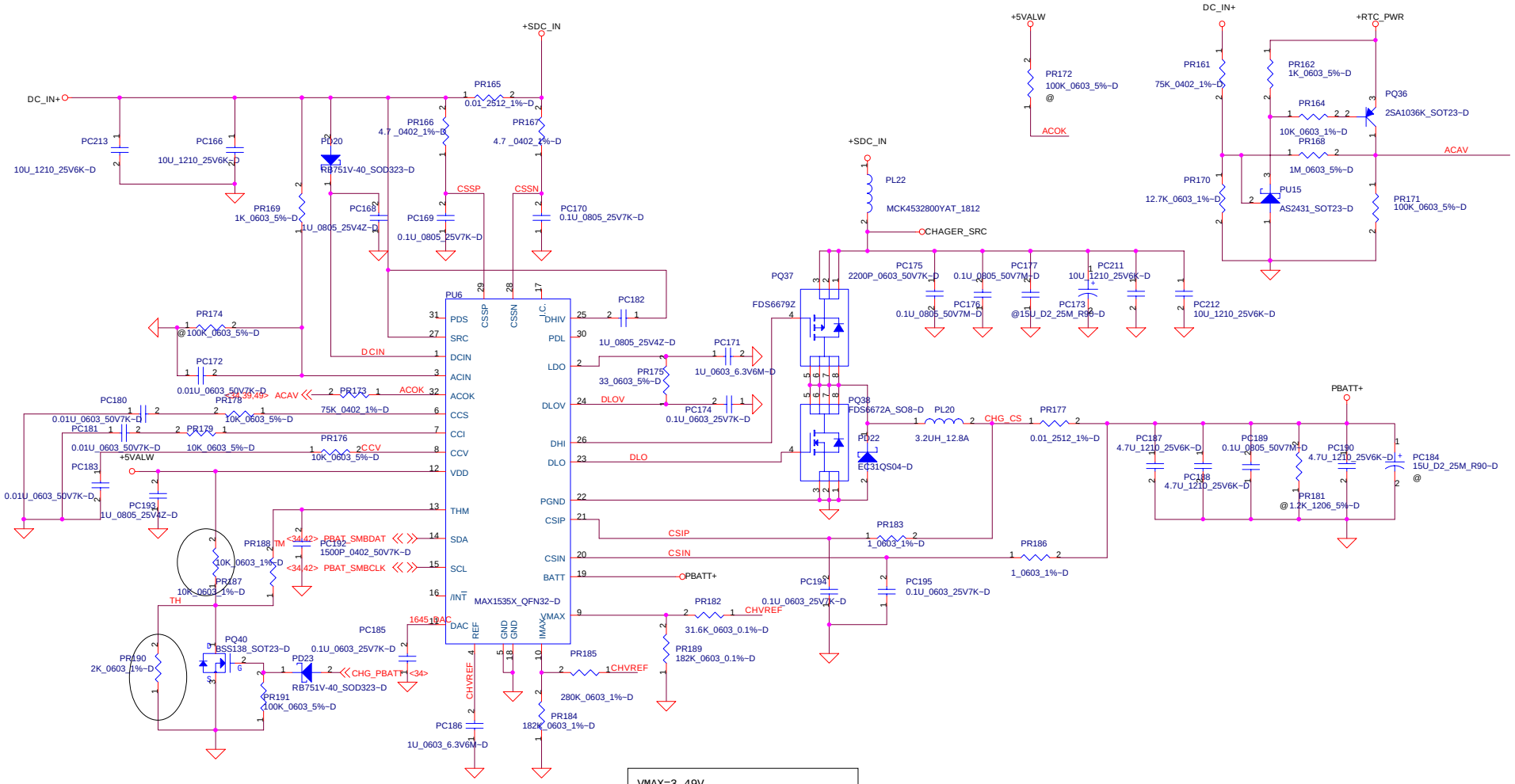

VMAX=3.49V
Maximum charger voltage=17.45V

IMAX=1.6V
Maximum charger current=8A

THIS SHEET OF ENGINEERING DRAWING IS THE PROPRIETARY PROPERTY OF COMPAL ELECTRONICS, INC. AND CONTAINS CONFIDENTIAL AND TRADE SECRET INFORMATION. THIS SHEET MAY NOT BE TRANSFERRED FROM THE CUSTODY OF THE COMPETENT DIVISION OF R&D DEPARTMENT EXCEPT AS AUTHORIZED BY COMPAL ELECTRONICS, INC. NEITHER THIS SHEET NOR THE INFORMATION IT CONTAINS MAY BE USED BY OR DISCLOSED TO ANY THIRD PARTY WITHOUT PRIOR WRITTEN CONSENT OF COMPAL ELECTRONICS, INC.

Compal Electronics, Inc.		
Title: CHARGER CONTROL		
Size	Document Number: LA-1711	Rev: X00-G
Date: Tuesday, March 18, 2003	Sheet 48 of 54	

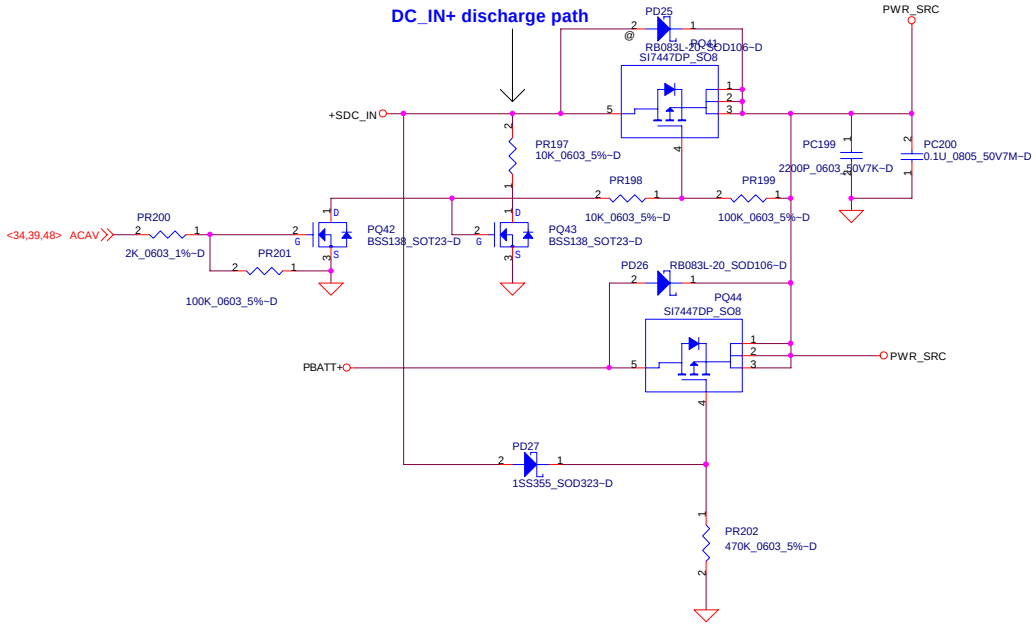

THIS SHEET OF ENGINEERING DRAWING IS THE PROPRIETARY PROPERTY OF COMPAL ELECTRONICS, INC. AND CONTAINS CONFIDENTIAL AND TRADE SECRET INFORMATION. THIS SHEET MAY NOT BE TRANSFERRED FROM THE CUSTODY OF THE COMPETENT DIVISION OF R&D DEPARTMENT EXCEPT AS AUTHORIZED BY COMPAL ELECTRONICS, INC. NEITHER THIS SHEET NOR THE INFORMATION IT CONTAINS MAY BE USED BY OR DISCLOSED TO ANY THIRD PARTY WITHOUT PRIOR WRITTEN CONSENT OF COMPAL ELECTRONICS, INC.

Compal Electronics, Inc.		
Title: Battery Discharge		
Size	Document Number: LA-1711	Rev: X00-G
Date: Tuesday, March 18, 2003	Sheet 49 of 54	

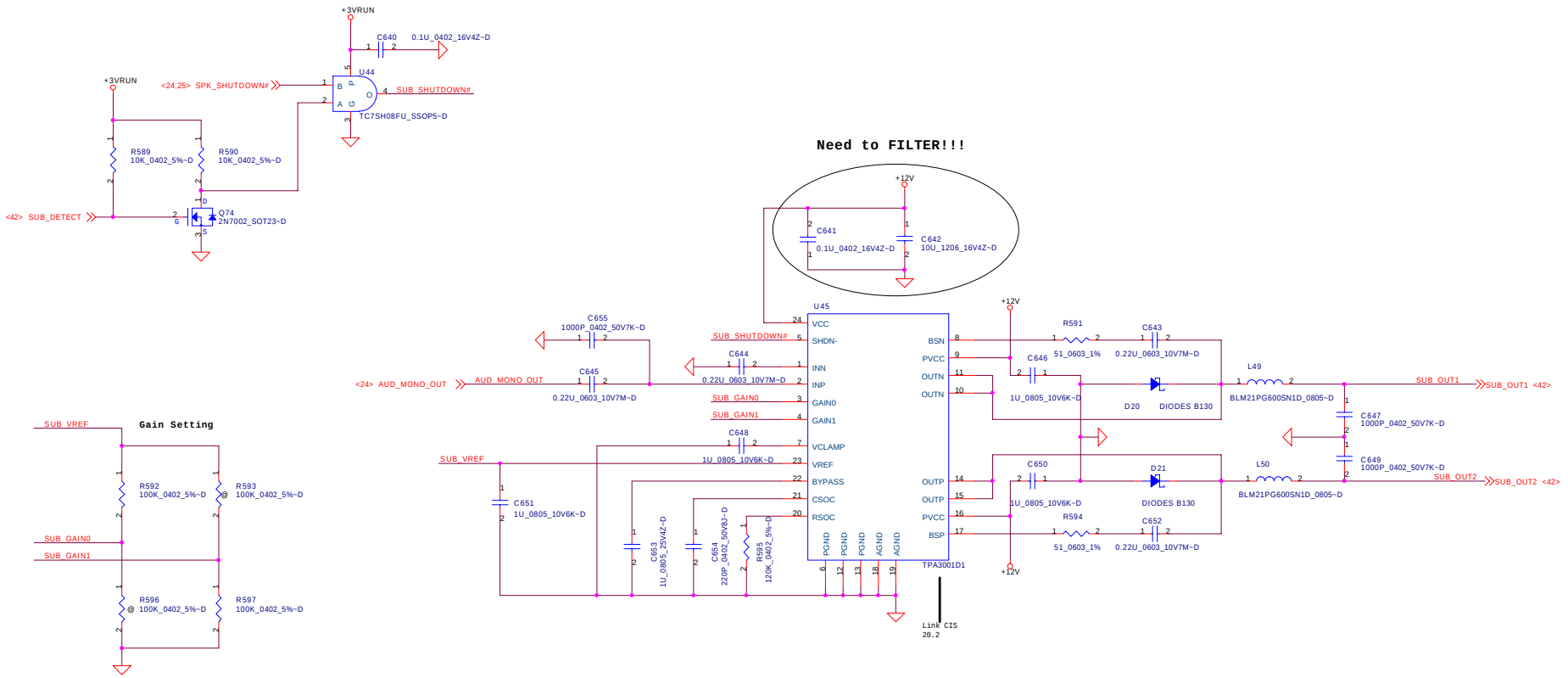

THIS SHEET OF ENGINEERING DRAWING IS THE PROPRIETARY PROPERTY OF COMPAL ELECTRONICS, INC. AND CONTAINS CONFIDENTIAL AND TRADE SECRET INFORMATION. THIS SHEET MAY NOT BE TRANSFERED FROM THE CUSTODY OF THE COMPETENT DIVISION OF R&D DEPARTMENT EXCEPT AS AUTHORIZED BY COMPAL ELECTRONICS, INC. NEITHER THIS SHEET NOR THE INFORMATION IT CONTAINS MAY BE USED BY OR DISCLOSED TO ANY THIRD PARTY WITHOUT PRIOR WRITTEN CONSENT OF COMPAL ELECTRONICS, INC.

Compal Electronics, Inc.

Title: **Subwoofer**

Size | Document Number: **LA-1711** | Rev: X00-G

Date: Tuesday, March 18, 2003 | Sheet 50 of 54

Version Change List (P. I. R. List) Page 1/3

Item	Page#	Title	Date	Request Owner	Issue Description	Solution Description	Rev.
1	8	Prescott Processor	2/17/2003	Compal	ITP Connector default depopulate	Depop RN8 (RN8 is populted on M00)	X00-A
2	11	Springdale-DDR Interface	2/17/2003	Compal	Resistor value SPEC isn't meet Intel recommend	Correct R367,R109 from 40.2_0603_1% to 42.2_0603_1% (M00 R109,R367 are mount 42.2_0603_1%)	X00-A
3	21	ICH5-IDE/LPC/ PM/GPIO/LAN	2/17/2003	Compal	Dell M00 Board Bring up issue item4: ICH5 PIN Y18, A19 are swapped on JHDD in the schematics and Pins V20, V22 are also swapped. HDD can't boot.	Swap IDE_PDCS1# and IDE_PDCS3#; Swap IDE_SDCS1# and IDE_SDCS3#.	X00-A
4	23	D-MODULE	2/17/2003	Compal	Dell M00 Board Bring up issue item5: +3.3VMOD power net no power source.we have two signal names for +3.3VMOD /+3VMOD, need jump wire.	Correct power net from +3.3VMOD to +3VMOD	X00-A
5	23	D-MODULE	2/17/2003	DELL	Need to cross the TX and RX lines on the motherboard side	Change JMOD1 pin8 from SATA_MODTX+ to SATA_MODRX+ Change JMOD1 pin10 from SATA_MODTX- to SATA_MODRX- Change JMOD1 pin14 from SATA_MODRX+ to SATA_MODTX+ Change JMOD1 pin16 from SATA_MODRX- to SATA_MODTX-	X00-A
6	26	USB(2.0) Connector	2/17/2003	DELL	Del all mark "2@" symbol, All components default must populate. Nimitz and Beijing both are support Dog House.	Del all mark "2@" symbol, All components default must populate. (All mark"2@" components are populate on M00 Board)	X00-A
7	37	Thermtrip & PowerGOOD	2/17/2003	Compal	Dell M00 Board Bring up issue item3: No generate system clock. U25 Pin1 and Pin 2 need to be shorted together, VCORE_PWRGD is an OD signal and it does not have a pullup.	VCORE_PWRGD signal add a 10K_0402_5%(R581) resistor pull up to +3VSUS.	X00-A
8	25	AMP and PHONE JACK	2/27/2003	DELL	Change OP amplifier power from +12V to +5V ,change audio amplifier as same as Abacus-MT	Change audio amplifier from TPA3002D2PHP to TI6017A2 (BOM need change)	X00-C
9	29	LAN Transfomer	2/27/2003	DELL	ME Connectors are interfere	Change RJ11/RJ45 receptacle connector to staddle type	X00-C
10	18	VGA Daughter Board Conn.	3/05/2003	Compal	Dell EE issue item38: Change AGP connector vendor	Change connector from ACES_88075-1600 to FOXCONN FOXCONN_QT00160A-9120L (BOM need change)	X00-D
11	6,34,36	Clock Generator	3/05/2003	DELL	Dell EE issue item22: This change is required due to not getting the 24MHz clk of the EC to work.	1.Del 24M_CLK net and R210(33_0402_5%) 2.Add series termination R587(33_0402_5%) near CK409 and R588(0_0402_5%) near the CPLD. Add net name from CK409 to CPLD. (BOM need change)	X00-D
12	8	Prescott Processor	3/05/2003	DELL	Dell EE issue item23: To prevent backdrive in S3	Change RN7,R35,R37 pullups from +3VSUS to +3VRUN.	X00-D
13	21	ICH5-IDE/LPC/ PM/GPIO/LAN	3/05/2003	DELL	Dell EE issue item25: This pin is not 5V tolerant.	Change R388 pullup from +5VRUN to +3VRUN.	X00-D
14	33,36	SIO (1/2) & PLD	3/05/2003	DELL	Dell EE issue item26: Change name of the follow signal from GV_LO_HI# to GV_HI_LO#	Change name of the follow signal from GV_LO_HI# to GV_HI_LO#	X00-D
15	25	AMP and Phone Jack Interface	3/05/2003	DELL	Dell EE issue item39: 1.Change the population option for R583 and R584 to no pop 2.Change the voltage rai lto D7, D6, D9, D8 to +5VRUN	1.R583,R584 Add "@" symbol and depop. 2.Change power from +12V to +5VRUN.	X00-D
16	18	VGA Daughter Board Conn.	3/05/2003	DELL	Dell EE issue item37: Table for ST1 and ST2, were did this table come from?	Delete ST1,ST2 table and R324~R327 (BOM need change)	X00-D
17	12	Springdale-AGP /HUB/VGA/CSA	3/05/2003	DELL	Dell EE issue item36: AGP8X_DET_GC circuit need to change per the errata change.	Change Q13 from MMBT3904 to 2N7002; R55 from 33.2_0603_1% to 39.2_0603_1% (BOM need change)	X00-D

THIS SHEET OF ENGINEERING DRAWING IS THE PROPRIETARY PROPERTY OF COMPAL ELECTRONICS, INC. AND CONTAINS CONFIDENTIAL AND TRADE SECRET INFORMATION. THIS SHEET MAY NOT BE TRANSFERRED FROM THE CUSTODY OF THE COMPETENT DIVISION OF R&D DEPARTMENT EXCEPT AS AUTHORIZED BY COMPAL ELECTRONICS, INC. NEITHER THIS SHEET NOR THE INFORMATION IT CONTAINS MAY BE USED BY OR DISCLOSED TO ANY THIRD PARTY WITHOUT PRIOR WRITTEN CONSENT OF COMPAL ELECTRONICS, INC.

Version Change List (P. I. R. List) Page 2/3

Item	Page#	Title	Date	Request Owner	Issue Description	Solution Description	Rev.
18	21	ICH5-IDE/LPC/ PM/GPIO/LAN	3/07/2003	Compal	HDD pinout are reversed	Change pinout and and connector part number(BOM need change)	X00-E
19	23	D- MODULE	3/07/2003	Compal	Change D- Module connector (Mating Height issue)	Change connector from JAE_WM1F068N1A to Foxconn QL11343-A6B3-HT	X00-E
20	26	USB(2.0) Connector	3/07/2003	Compal	ME Connectors are interfere	Change connector to staddle type. Foxconn Fox_UB11193-P01-TR (BOM need change)	X00-E
21	11	Springdale-DDR Interface	3/07/2003	Compal	Dell M00 Board Bring up issue item34,35: SMXRCOMPVOH - add 0.1UF cap from +2.5V (pin2 of C65) to GND SMYRCOMPVOH - add 0.1UF cap from +2.5V (pin2 of C53) to GND	Add C636 and C637(0.1U_0402_16V4Z) ~~[BOM need change]~~	X00-E
22	36	PLD	3/08/2003	DELL	Dell M00 Board Bring up issue item27 Need to change PLD pinout per the right package program.	Follow CPLD rework instruction, correct U27 symbol pin out.	X00-E
23	36	PLD	3/08/2003	DELL	Dell M00 Board Bring up issue item28 Eliminate the VID MUX and keep the zero Ohm resistors	Del U1,C10,R14,R18,RP1,R13 (BOM need change)	X00-E
24	8,18,36		3/08/2003	DELL	Dell M00 Board Bring up issue item24 Change the table on pg 36 to reflect the correct refdes and components see PLD rework instructions	Page36: Pop U27, C233, C606, R557 ;Pop Q42, R254, Depop R259 ; Pop Q43, R561, Depop R251,R243 ; Pop R256, Depop R252; pop R245, R253 Page18: Depop R96, Pop R98 Page8 :Pop R76,R78,R380 Page46: PR94,PR93, Depop PR95,PR92 [BOM need change]	X00-E
25	8	Prescott Processor	3/12/2003	DELL	Dell M00 Board Bring up issue item32 Depop pullup R84 on H_RESET# since we have another pullup R358	Depop R84 ,62_0402_5%(BOM need change)	X00-F
26	11	Springdale-DDR Interface	3/12/2003	DELL	Value is not correct	Change C636,C637 (0.01U_0402_16V7K) [Add it on BOM]	X00-F
27	14	FAN CONTROL	3/12/2003	Compal	ME connector design change	Change JFAN2 from MOLEX_53261-0310 to MOLEX_53398-0390; Delete JFAN1 [BOM need change]	X00-F
28	15,19	CPU Thermal Sensor & FAN Control	3/12/2003	DELL	To saving cost	Delete U35(AD7414ART-0),R345(10K_0402_5%),R348(0_0402_5%), C383(0.1U_0402_16V4Z); Add Q73(MMBT3904) [BOM change]	X00-F
29	19	CPU Thermal Sensor & FAN Control	3/12/2003	Compal	ME connector design change	Change JFAN3 from MOLEX_53261-0310 to SUYIN_250019MR003G400ZL [BOM need change]	X00-F
30	25	AMP and PHONE JACK	3/12/2003	Compal	ME connector design change for phone Jack and Int.SPK	Change JSPK from MOLEX_53261-0690 to MOLEX_53398_0890; change JP1 from HRS_DF20-10DP-1V to NAIS_AXN320C038P; Add C638,C639(22U_1206_16V4Z) [BOM need change]	X00-F
31	24,25,50	Subwoofer	3/12/2003	DELL	Add Subwoofer circuit	Page24: U16 pin37 connect to C646 pin1(AUD_MONO_OUT) Page25: Del R586(100K_0402_5%) [BOM need change] Page50 : Add subwoofer circuit [Add]	X00-F
32	31	CardBus Socket	3/12/2003	DELL	All model support smart card function	Update page3 Table and change mark "1@" symbol to "@"	X00-F
33	21	ICH5-IDE/LPC/ PM/GPIO/LAN	3/12/2003	DELL	Follow Intel DG (12837)ICH_SYNC# circuit implementation	Depop R161,R167,R169,Q32,Q33 and pop R438(0_0402_5%) [BOM need change]	X00-F
34	31	CardBus Socket	3/13/2003	Compal	Correct Item32	Populate U17 and L14, delete "1@" symbol [Don't need change BOM]	X00-G

THIS SHEET OF ENGINEERING DRAWING IS THE PROPRIETARY PROPERTY OF COMPAL ELECTRONICS, INC. AND CONTAINS CONFIDENTIAL AND TRADE SECRET INFORMATION. THIS SHEET MAY NOT BE TRANSFERRED FROM THE CUSTODY OF THE COMPETENT DIVISION OF R&D DEPARTMENT EXCEPT AS AUTHORIZED BY COMPAL ELECTRONICS, INC. NEITHER THIS SHEET NOR THE INFORMATION IT CONTAINS MAY BE USED BY OR DISCLOSED TO ANY THIRD PARTY WITHOUT PRIOR WRITTEN CONSENT OF COMPAL ELECTRONICS, INC.

Version Change List (P. I. R. List) Page3/3

Item	Page#	Title	Date	Request Owner	Issue Description	Solution Description	Rev.
35	27,31		3/14/2003	Compal	ME connector design change	Page27 :Change JMDC from FOX_QT8A0301-3011 to AMP_3-1612118-0 Page31: Change JCBUS form FCI_61082-081001 to FOX_1CA87501-T1~D; Change J1394 from FOX_UV31413-K8 [BOM need change]	X00-G
36	31	CardBus Socket	3/14/2003	DELL	Dell Schematic issue item12 Please add a 100PF cap to SC_DATA_C per TI late recommendation	Add C656(100P_0402_50V7K). [BOM need change]	X00-G
37	8	Prescott Processor	3/14/2003	DELL	H_DPSLP# doubule pull up	Depop R79(62_0402_5%) , [BOM need change]	X00-G
38	25	AMP and PHONE JACK	3/14/2003	DELL	Dell Schematic issue item48 Remove comment above U18 and remove the wires in the bottom	Connect C638 and C639 to INT_TWT_R1 and INT_TWT_L1 at JSPK	X00-G
39	25	AMP and PHONE JACK	3/14/2003	DELL	Dell Schematic issue item48 Change the pinout of JAUDO	Change net FAN1_TACH_FN from pin16 to pin18, pin15,16 connect to GND	X00-G
40	29	LAN TRANSFOMER	3/14/2003	DELL	Dell Schematic issue item45,46 the BJT werent driving the LED enough	1.Change Q3 from DTC144KA_SOT23 to 2N7002 2.LED_WLAN5_RADIOSTATE, LED_WLAN24_RADIOSTATE, and WLAN_LED_ACIVITY. Add 10K_0402_5% pulldown resistor(R600~R602) [BOM need change]	X00-G
41	50	Subwoofer	3/14/2003	DELL	Dell Schematic issue item48 Move D18 and D19 to page 42, and update all component Symbols	Move D18 and D19 to page 42, and update all component Symbols , move C655 from current location to in between C645 and U45 pin 2 and change value to 1000P_0402_50V7K	X00-G
~~42~~	~~6~~	~~Clock Generator~~	~~3/14/2003~~	~~DELL~~	~~Dell Schematic issue item30~~ ~~Springdale DG P65 recommed a 10 Ohm resistor from CK_VDD_MAIN to Pin VDD_48 (pin34) of Ck409~~	~~Reserved power source option: populate R589, depopulate R599 [BOM need change]~~	~~X00-G~~
Delete by Dell's update issue_0314 ;X00-H							
43	11	Springdale-DDR Interface	3/18/2003	Compal	Intel recommend is 31.12K,the value isn't popularize. Follow Dell's DT team use 30.9K	Change R101,106,369,373 from 31.12K_0603_1% to 30.9K_0603_1% ;[BOM need change]	X00-H
44	25	AMP and PHONE JACK	3/18/2003	Compal	Add one net for Phone Jack board pullup source.	Change JAUDO pin11 from NC to AMPVCC	X00-H
45	36,39,40		3/18/2003	Compal	Single name issue	Delete pin 22 of U27 net and show text ; move U25B from page39 to page40, change pin4,5 to GND and pin6 to NC.	X00-H

THIS SHEET OF ENGINEERING DRAWING IS THE PROPRIETARY PROPERTY OF COMPAL ELECTRONICS, INC. AND CONTAINS CONFIDENTIAL AND TRADE SECRET INFORMATION. THIS SHEET MAY NOT BE TRANSFERRED FROM THE CUSTODY OF THE COMPETENT DIVISION OF R&D DEPARTMENT EXCEPT AS AUTHORIZED BY COMPAL ELECTRONICS, INC. NEITHER THIS SHEET NOR THE INFORMATION IT CONTAINS MAY BE USED BY OR DISCLOSED TO ANY THIRD PARTY WITHOUT PRIOR WRITTEN CONSENT OF COMPAL ELECTRONICS, INC.

POWER Version Change List (P. I. R. List)

Item	Page#	Title	Date	Request Owner	Issue Description	Solution Description	Rev.
1	45	1.25V/2.5V	2/26/2003	Compal	Dell M00 Board Bring up issue item13: Make SUSPOWROK_5V a strong pullup.	Depop PR86 (PR86 is populted on M00)	X00-B
2	43	3.3V/5V	2/26/2003	DELL	Dell M00 Board Bring up issue item21: Need to add pads for voltage/temp tolerance measurements. Request from our Reliability engineers.	Add voltage divider at +5VSUSP(PR227, PR229) Add voltage divider at +3VSRCP(PR228, PR230)	X00-B
3	46,47	CPU_CORE_Controller CPU_CORE_Power-Stage	2/26/2003	DELL	Dell M00 Board Bring up issue item29: Change CPU controller and driver VCC to +5VRUN to reduce S3 current.	Change PU9 and PU11, PU12, PU13, PU14 VCC to +5VRUN	X00-B
4	46	CPU_CORE_Controller	3/05/2003	DELL	Dell X00 Board issue item40,41: Change the power rail to the following components PR99, PU20A/B, PC214 from +5VSUS to +5VRUN Change the power rail to the following component PR114 from +3VSRC to +3VRUN	Change the power rail of PR99 and PU20A/B, PC214,PR97 from +5VSUS to +5VRUN Change the power rail of PR114 from +3VSRC to +3VRUN	X00-D
5	44,45	+1.5VRUNP/ +VTT_GMCHP 1.25V/2.5V	3/07/2003	DELL	Intersil ISL6225B IC issue. So change controller IC.	Change PU7 to SC1485 and PU8 to SC1486.	X00-E
6	45	1.25V/2.5V	3/12/2003	DELL	Dell X00 Board issue item47: Intle in the DG 1.21 update have changed the DDR voltage to 2.6V and Term voltage to 1.3.	Change PR72 to 42.2K	X00-F

THIS SHEET OF ENGINEERING DRAWING IS THE PROPRIETARY PROPERTY OF COMPAL ELECTRONICS, INC. AND CONTAINS CONFIDENTIAL AND TRADE SECRET INFORMATION. THIS SHEET MAY NOT BE TRANSFERRED FROM THE CUSTODY OF THE COMPETENT DIVISION OF R&D DEPARTMENT EXCEPT AS AUTHORIZED BY COMPAL ELECTRONICS, INC. NEITHER THIS SHEET NOR THE INFORMATION IT CONTAINS MAY BE USED BY OR DISCLOSED TO ANY THIRD PARTY WITHOUT PRIOR WRITTEN CONSENT OF COMPAL ELECTRONICS, INC.