Compal Confidential

NAT02 M/B Schematics Document

Intel Arrandale Processor with DDRIII + Ibex Peak-M

2009-11-26

REV:1.0

Security Classification	Compal Secret Data		
Issued Date	2009/09/21	Deciphered Date	2010/09/21

THIS SHEET OF ENGINEERING DRAWING IS THE PROPRIETARY PROPERTY OF COMPAL ELECTRONICS, INC. AND CONTAINS CONFIDENTIAL AND TRADE SECRET INFORMATION. THIS SHEET MAY NOT BE TRANSFERED FROM THE CUSTODY OF THE COMPETENT DIVISION OF R&D DEPARTMENT EXCEPT AS AUTHORIZED BY COMPAL ELECTRONICS, INC. NEITHER THIS SHEET NOR THE INFORMATION IT CONTAINS MAY BE USED BY OR DISCLOSED TO ANY THIRD PARTY WITHOUT PRIOR WRITTEN CONSENT OF COMPAL ELECTRONICS, INC.

Compal Electronics, Inc.

Title: **Cover Page**

Size	Document Number	Rev
Custom	NAT02 M/B LA-5154P Schematic	1.0

Date: Thursday, November 26, 2009 | Sheet 1 of 49

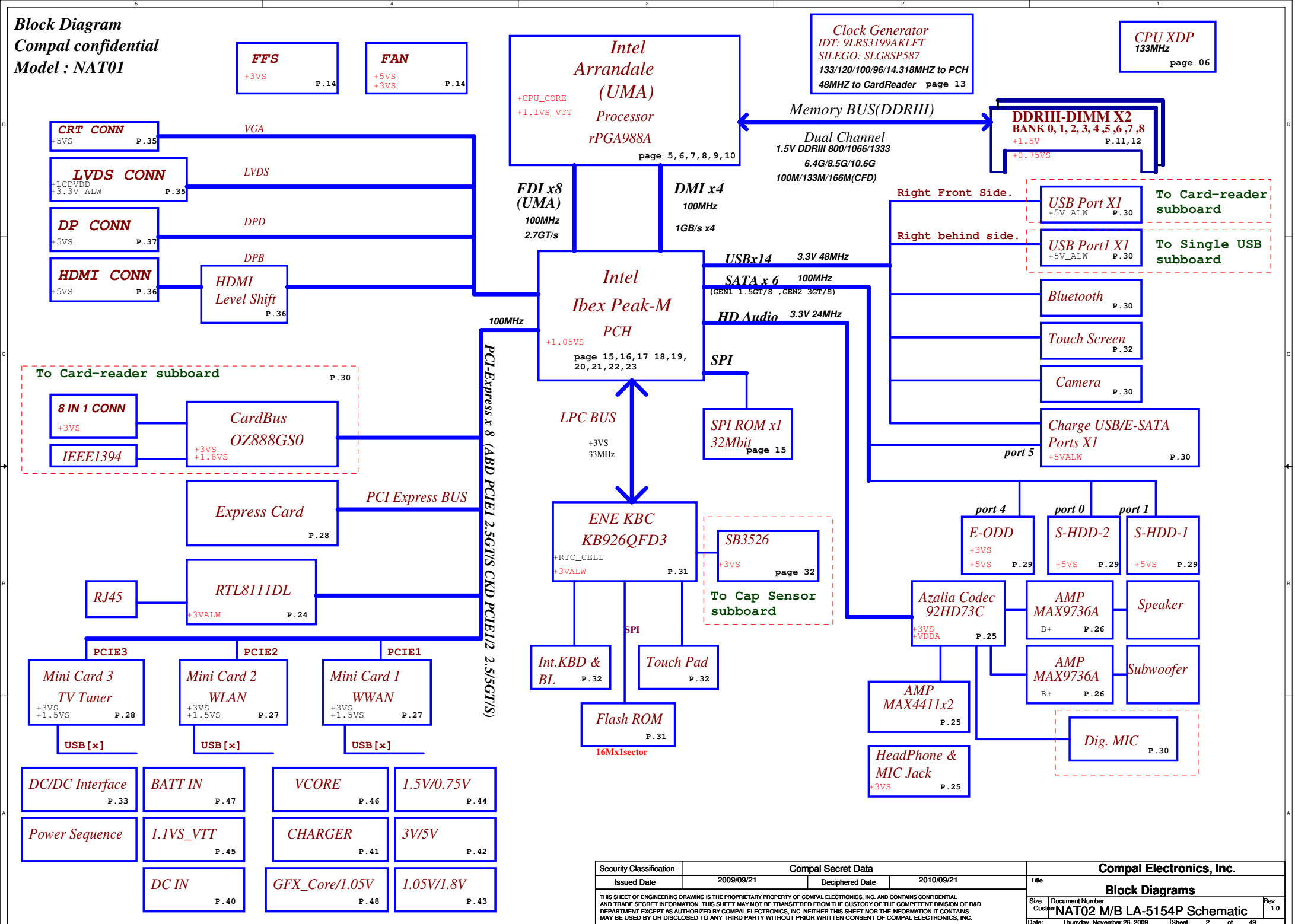
Block Diagram
Compal confidential
Model : NAT01
FFS
+3VS
P.14
FAN
+5VS
+3VS
P.14
Intel
Arrandale
(UMA)
Processor
rPGA988A
+CPU_CORE
+1.1VS_VTT
page 5,6,7,8,9,10
Clock Generator
IDT: 9LRS3199AKLFT
SILEGO: SLG8SP587
133/120/100/96/14.318MHZ to PCH
48MHZ to CardReader page 13
CPU XDP
133MHz
page 06
Memory BUS(DDRIII)
Dual Channel
1.5V DDRIII 800/1066/1333
6.4G/8.5G/10.6G
100M/133M/166M(CFD)
DDRIII-DIMM X2
BANK 0, 1, 2, 3, 4 ,5 ,6 ,7 ,8
+1.5V
+0.75VS
P.11,12
CRT CONN
+5VS
P.35
VGA
LVDS CONN
+LCDVDD
+3.3V_ALW
P.35
LVDS
DP CONN
+5VS
P.37
DPD
HDMI CONN
+5VS
P.36
DPB
HDMI
Level Shift
P.36
FDI x8
(UMA)
100MHz
2.7GT/s
DMI x4
100MHz
1GB/s x4
Intel
Ibex Peak-M
PCH
+1.05VS
page 15,16,17 18,19,
20,21,22,23
100MHz
USBx14
3.3V 48MHz
SATA x 6
100MHz
(GEN1 1.5GT/S ,GEN2 3GT/S)
HD Audio
3.3V 24MHz
SPI
Right Front Side.
USB Port X1
+5V_ALW
P.30
To Card-reader
subboard
Right behind side.
USB Port1 X1
+5V_ALW
P.30
To Single USB
subboard
Bluetooth
P.30
Touch Screen
P.32
Camera
P.30
Charge USB/E-SATA
Ports X1
+5VALW
P.30
port 5
To Card-reader subboard
P.30
8 IN 1 CONN
+3VS
IEEE1394
CardBus
OZ888GS0
+3VS
+1.8VS
Express Card
P.28
PCI Express BUS
PCI-Express x 8 (ABD PCIE1 2.5GT/S CKD PCIE1/2 2.5/5GT/S)
LPC BUS
+3VS
33MHz
SPI ROM x1
32Mbit
page 15
ENE KBC
KB926QFD3
+RTC_CELL
+3VALW
P.31
SB3526
+3VS
page 32
To Cap Sensor
subboard
SPI
Int.KBD &
BL
P.32
Touch Pad
P.32
Flash ROM
P.31
16Mx1sector
port 4
E-ODD
+3VS
+5VS
P.29
port 0
S-HDD-2
+5VS
P.29
port 1
S-HDD-1
+5VS
P.29
RJ45
RTL8111DL
+3VALW
P.24
Azalia Codec
92HD73C
+3VS
+VDDA
P.25
AMP
MAX9736A
B+
P.26
Speaker
AMP
MAX9736A
B+
P.26
Subwoofer
AMP
MAX4411x2
P.25
Dig. MIC
P.30
HeadPhone &
MIC Jack
+3VS
P.25
PCIE3
PCIE2
PCIE1
Mini Card 3
TV Tuner
+3VS
+1.5VS
P.28
Mini Card 2
WLAN
+3VS
+1.5VS
P.27
Mini Card 1
WWAN
+3VS
+1.5VS
P.27
USB[x]
USB[x]
USB[x]
DC/DC Interface
P.33
BATT IN
P.47
VCORE
P.46
1.5V/0.75V
P.44
Power Sequence
1.1VS_VTT
P.45
CHARGER
P.41
3V/5V
P.42
DC IN
P.40
GFX_Core/1.05V
P.48
1.05V/1.8V
P.43
Security Classification
Compal Secret Data
Issued Date
2009/09/21
Deciphered Date
2010/09/21
THIS SHEET OF ENGINEERING DRAWING IS THE PROPRIETARY PROPERTY OF COMPAL ELECTRONICS, INC. AND CONTAINS CONFIDENTIAL AND TRADE SECRET INFORMATION. THIS SHEET MAY NOT BE TRANSFERED FROM THE CUSTODY OF THE COMPETENT DIVISION OF R&D DEPARTMENT EXCEPT AS AUTHORIZED BY COMPAL ELECTRONICS, INC. NEITHER THIS SHEET NOR THE INFORMATION IT CONTAINS MAY BE USED BY OR DISCLOSED TO ANY THIRD PARTY WITHOUT PRIOR WRITTEN CONSENT OF COMPAL ELECTRONICS, INC.
Compal Electronics, Inc.
Title
Block Diagrams
Size
Custom
Document Number
NAT02 M/B LA-5154P Schematic
Rev
1.0
Date: Thursday, November 26, 2009
Sheet 2 of 49

Voltage Rails

Power Plane	Description	S1	S3	S5
VIN	Adapter power supply (19V)	N/A	N/A	N/A
B+	AC or battery power rail for power circuit.	N/A	N/A	N/A
+CPU_CORE	Core voltage for CPU	ON	OFF	OFF
+VGFX_CORE	Core voltage for Graphic	ON	OFF	OFF
+0.75VS	0.75V switched power rail for DDR terminator	ON	OFF	OFF
+1.05VS	1.05V switched power rail for PCH	ON	OFF	OFF
+1.1VS_VTT	1.1V switched power rail (1.05 for AUB CPU)	ON	OFF	OFF
+1.1VS	1.1V power rail for PCIE of GUP	ON	OFF	OFF
+1.5V	1.5V power rail for DDRIII	ON	ON	OFF
+1.5VS	1.5V switched power rail	ON	OFF	OFF
+1.8VS	1.8V switched power rail	ON	OFF	OFF
+3VALW	3.3V always on power rail	ON	ON	ON*
+LAN_IO	3.3V power rail for LAN	ON	ON	ON*
+3VS	3.3V switched power rail	ON	OFF	OFF
+5VALW	5V always on power rail	ON	ON	ON*
+5VS	5V switched power rail	ON	OFF	OFF
B+_BIAS	B+ always on power rail	ON	ON	ON*
+RTCVCC	RTC power	ON	ON	ON

Note : ON* means that this power plane is ON only with AC power available, otherwise it is OFF.

STATE \ SIGNAL	SLP_S1#	SLP_S3#	SLP_S4#	SLP_S5#	+VALW	+V	+VS	Clock
Full ON	HIGH	HIGH	HIGH	HIGH	ON	ON	ON	ON
S1(Power On Suspend)	LOW	HIGH	HIGH	HIGH	ON	ON	ON	LOW
S3 (Suspend to RAM)	LOW	LOW	HIGH	HIGH	ON	ON	OFF	OFF
S4 (Suspend to Disk)	LOW	LOW	LOW	HIGH	ON	OFF	OFF	OFF
S5 (Soft OFF)	LOW	LOW	LOW	LOW	ON	OFF	OFF	OFF

Board ID / SKU ID Table for AD channel

	Vcc	3.3V +/- 5%			
	Ra	100K +/- 1%			
Board ID	VGA	Rb	V_{AD_BID} min	V_{AD_BID} typ	V_{AD_BID} max
X00	M96	0	0 V	0 V	0.100 V
X01	M96	8.2K +/- 1%	0.216 V	0.250 V	0.289 V
X02	M96	18K +/- 1%	0.436 V	0.503 V	0.538 V
MP	M96	33K +/- 1%	0.712 V	0.819 V	0.875 V
X00	Madison	56K +/- 1%	1.036 V	1.185 V	1.264 V
X01	Madison	100K +/- 1%	1.453 V	1.650 V	1.759 V
X02	Madison	200K +/- 1%	1.935 V	2.200 V	2.341 V
MP	Madison	NC	2.500 V	3.300 V	3.300 V

External PCI Devices

Device	IDSEL#	REQ#/GNT#	Interrupts

EC SM Bus1 address

Device	Address
Smart Battery	0001 011X b

EC SM Bus2 address

Device	Address
WWAN	
WLAN	
Express Card	

Ibex SM Bus address

Device	Address
Clock Generator (9LRS3191AKLFT, SLG8SP585)	1101 0010b
DDR DIMM0	1001 000Xb
DDR DIMM1	1001 010Xb
Free Fall Sensor	
CPU XDP	
PCH XDP	remove
XDCP_ISL90727	0101 110Xb
XDCP_ISL90728	0111 110Xb

USB Port Table

USB Port	Device
0	USB&ESATA
1	Reader/BD
2	USB board
3	WPAN
4	WLAN
5	WWAN
6	NC
7	NC
8	Express
9	Touch screen
10	Bluetooth
11	Camera

BTO Option Table

BTO Item	BOM Structure

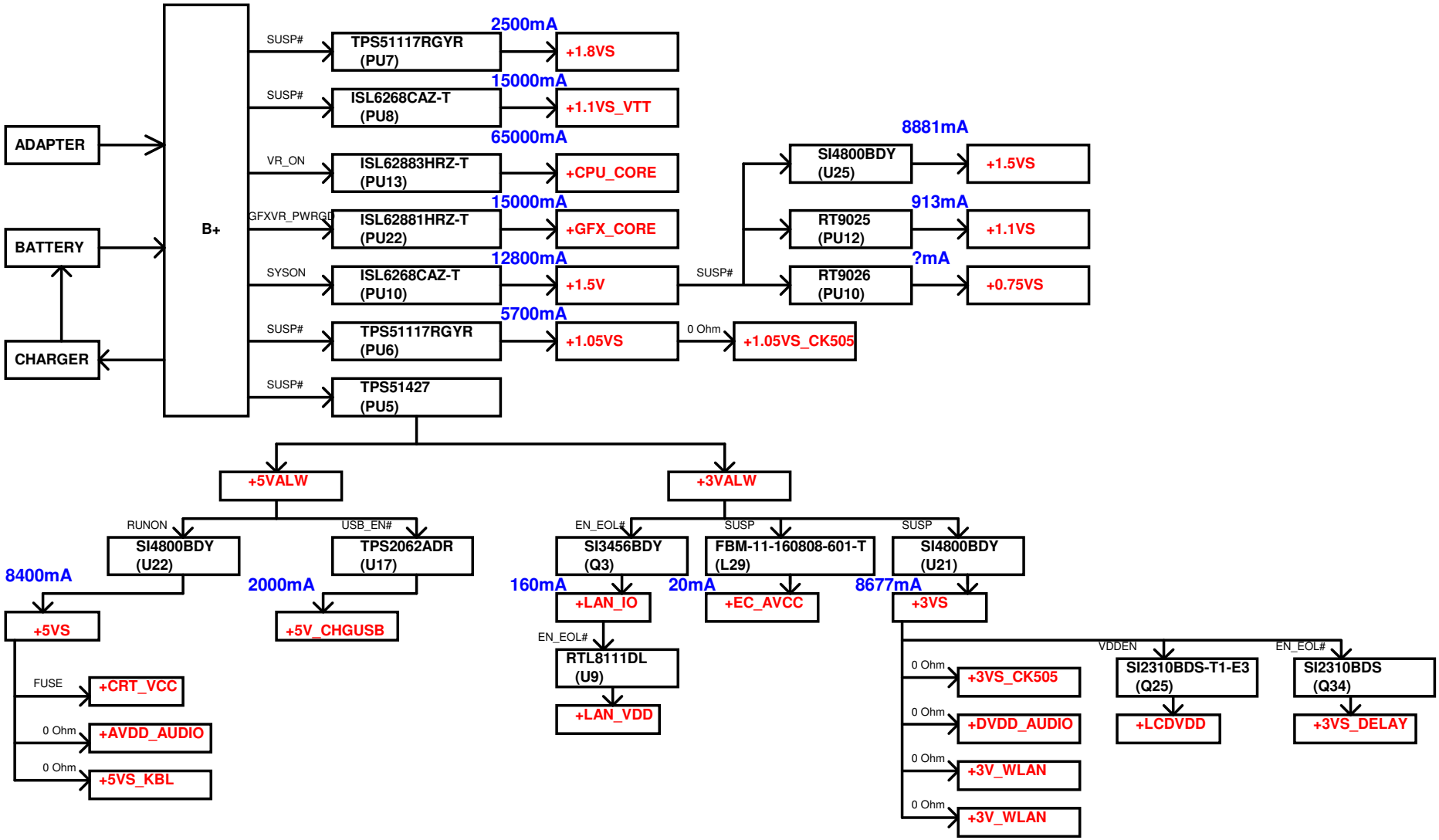

Security Classification	Compal Secret Data		
Issued Date	2009/09/21	Deciphered Date	2010/09/21

THIS SHEET OF ENGINEERING DRAWING IS THE PROPRIETARY PROPERTY OF COMPAL ELECTRONICS, INC. AND CONTAINS CONFIDENTIAL AND TRADE SECRET INFORMATION. THIS SHEET MAY NOT BE TRANSFERED FROM THE CUSTODY OF THE COMPETENT DIVISION OF R&D DEPARTMENT EXCEPT AS AUTHORIZED BY COMPAL ELECTRONICS, INC. NEITHER THIS SHEET NOR THE INFORMATION IT CONTAINS MAY BE USED BY OR DISCLOSED TO ANY THIRD PARTY WITHOUT PRIOR WRITTEN CONSENT OF COMPAL ELECTRONICS, INC.

Compal Electronics, Inc.

Title: **Power Rail**

Size: Custom | Document Number: NAT02 M/B LA-5154P Schematic | Rev: 1.0

Date: Thursday, November 26, 2009 | Sheet 4 of 49

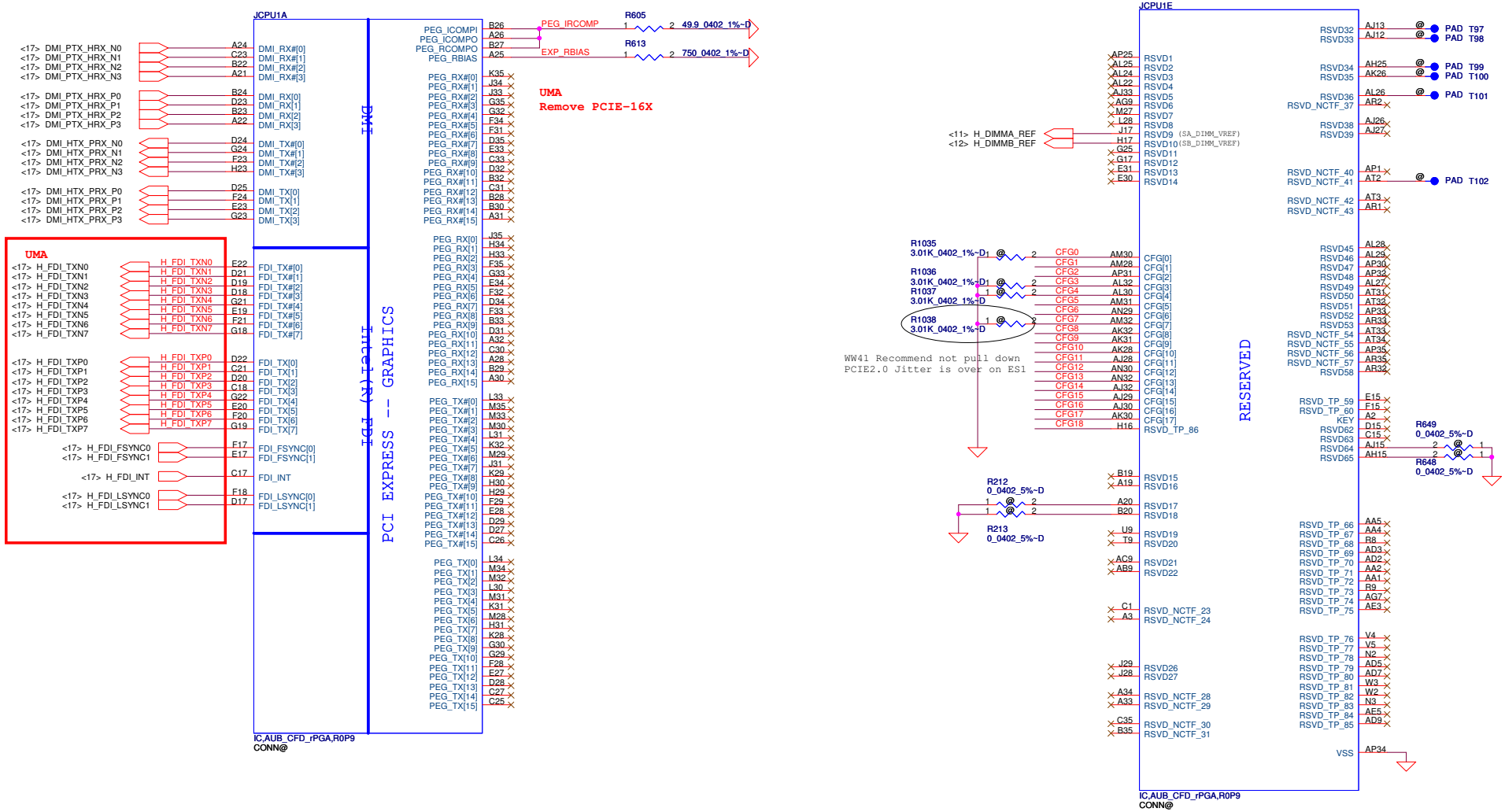

CFG0 - PCI-Express Configuration Select

*1:Single PEG
0:Bifurcation enabled

CFG3 - PCI-Express Static Lane Reversal

*1 :Normal Operation
0 :Lane Numbers Reversed
15 -> 0, 14 -> 1, ...

CFG4 - Display Port Presence

*1:Disabled; No Physical Display Port attached to Embedded Display Port
0:Enabled; An external Display Port device is connected to the Embedded Display Port

*:Default

Security Classification	Compal Secret Data		
Issued Date	2009/09/21	Deciphered Date	2010/09/21

THIS SHEET OF ENGINEERING DRAWING IS THE PROPRIETARY PROPERTY OF COMPAL ELECTRONICS, INC. AND CONTAINS CONFIDENTIAL AND TRADE SECRET INFORMATION. THIS SHEET MAY NOT BE TRANSFERED FROM THE CUSTODY OF THE COMPETENT DIVISION OF R&D DEPARTMENT EXCEPT AS AUTHORIZED BY COMPAL ELECTRONICS, INC. NEITHER THIS SHEET NOR THE INFORMATION IT CONTAINS MAY BE USED BY OR DISCLOSED TO ANY THIRD PARTY WITHOUT PRIOR WRITTEN CONSENT OF COMPAL ELECTRONICS, INC.

Compal Electronics, Inc.

Title: **PROCESSOR (1/6) DMI,FDI,PEG**

Size: Custom | Document Number: NAT02 M/B LA-5154P Schematic | Rev: 1.0

Date: Thursday, November 26, 2009 | Sheet 5 of 49

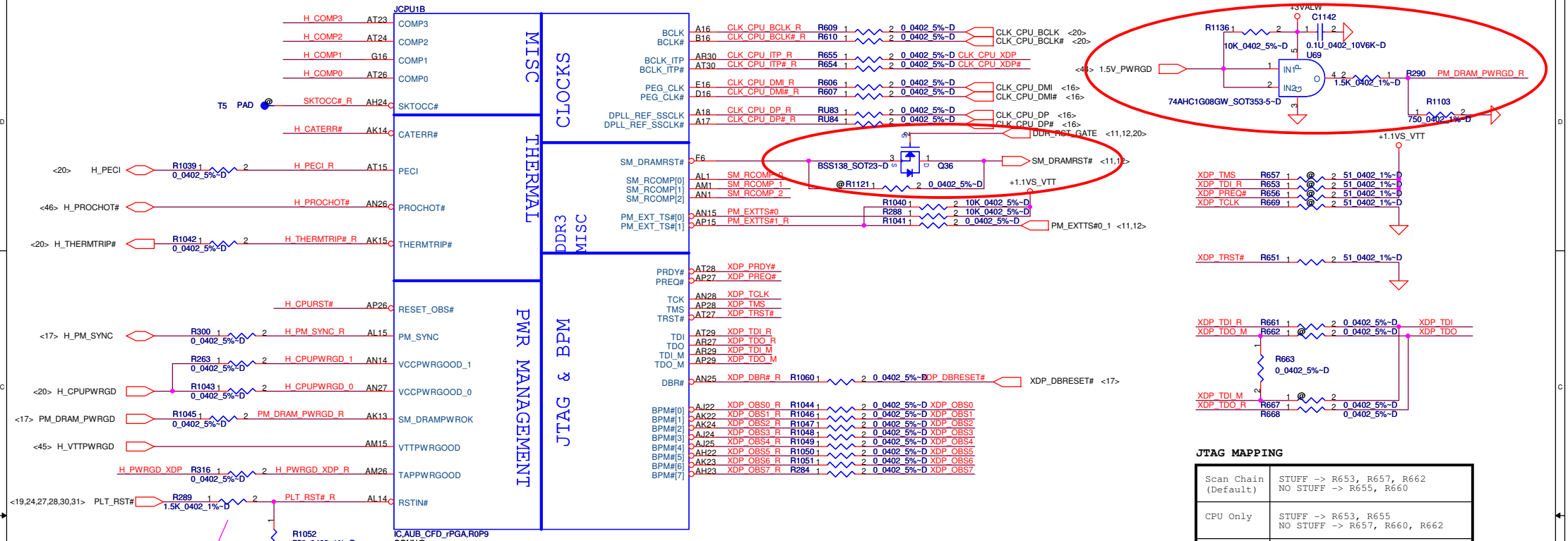

WW51.4 CRB Board Rework/workaround- Rev 0.1
has changed the resistors in RSTIN#

[Calpella] Platform - Design Guide -
Addendum / Update - Rev. 1.52

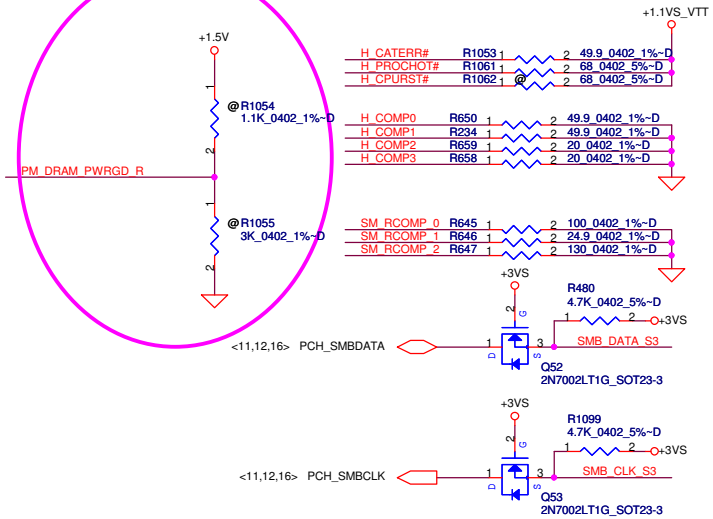

JTAG MAPPING

Scan Chain (Default)	STUFF -> R653, R657, R662 NO STUFF -> R655, R660
CPU Only	STUFF -> R653, R655 NO STUFF -> R657, R660, R662
GMCH Only	STUFF -> R660, R662 NO STUFF -> R653, R655, R657

XDP Connector

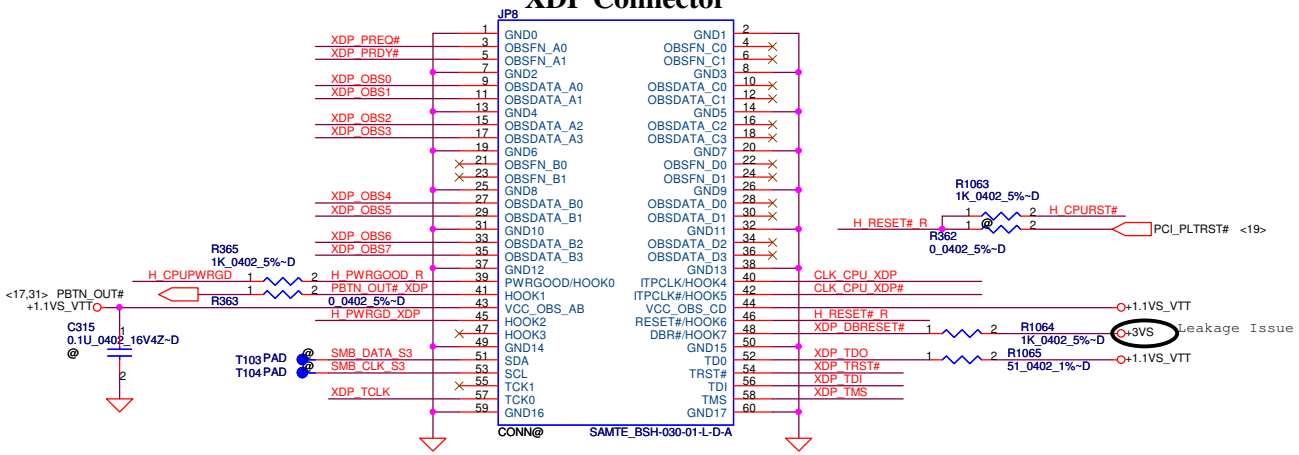

Security Classification	Compal Secret Data		
Issued Date	2009/09/21	Deciphered Date	2010/09/21

THIS SHEET OF ENGINEERING DRAWING IS THE PROPRIETARY PROPERTY OF COMPAL ELECTRONICS, INC. AND CONTAINS CONFIDENTIAL AND TRADE SECRET INFORMATION. THIS SHEET MAY NOT BE TRANSFERED FROM THE CUSTODY OF THE COMPETENT DIVISION OF R&D DEPARTMENT EXCEPT AS AUTHORIZED BY COMPAL ELECTRONICS, INC. NEITHER THIS SHEET NOR THE INFORMATION IT CONTAINS MAY BE USED BY OR DISCLOSED TO ANY THIRD PARTY WITHOUT PRIOR WRITTEN CONSENT OF COMPAL ELECTRONICS, INC.

Compal Electronics, Inc.

Title: **PROCESSOR (2/6) CLK,JTAG**

Size: Custom | Document Number: NAT02 M/B LA-5154P Schematic | Rev: 1.0

Date: Thursday, November 26, 2009 | Sheet 6 of 49

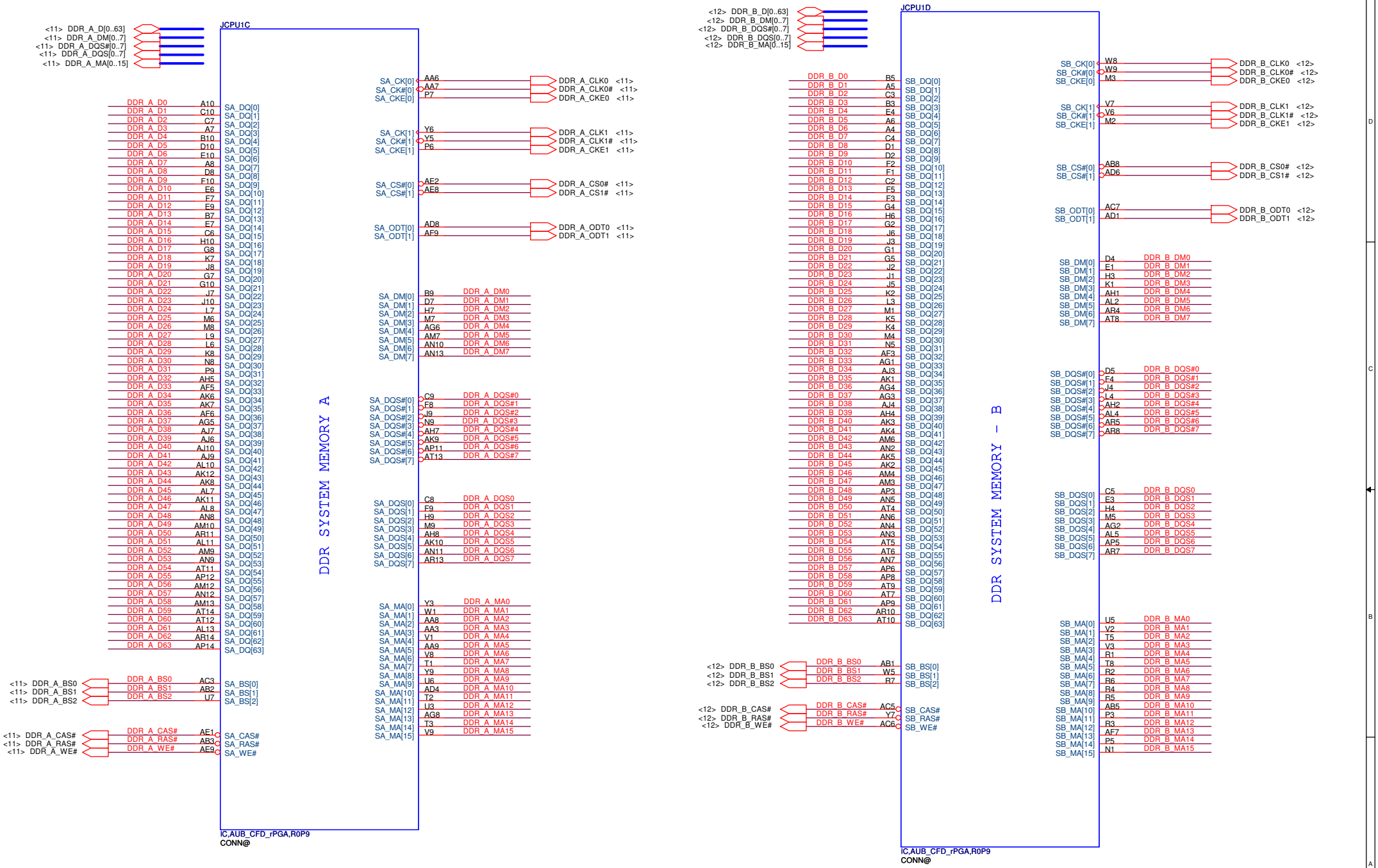

Security Classification	Compal Secret Data		
Issued Date	2009/09/21	Deciphered Date	2010/09/21

THIS SHEET OF ENGINEERING DRAWING IS THE PROPRIETARY PROPERTY OF COMPAL ELECTRONICS, INC. AND CONTAINS CONFIDENTIAL AND TRADE SECRET INFORMATION. THIS SHEET MAY NOT BE TRANSFERED FROM THE CUSTODY OF THE COMPETENT DIVISION OF R&D DEPARTMENT EXCEPT AS AUTHORIZED BY COMPAL ELECTRONICS, INC. NEITHER THIS SHEET NOR THE INFORMATION IT CONTAINS MAY BE USED BY OR DISCLOSED TO ANY THIRD PARTY WITHOUT PRIOR WRITTEN CONSENT OF COMPAL ELECTRONICS, INC.

Compal Electronics, Inc.

Title: **PROCESSOR (3/6) DDRIII**

Size: B | Document Number: NAT02 M/B LA-5154P Schematic | Rev: 1.0

Date: Thursday, November 26, 2009 | Sheet 7 of 49

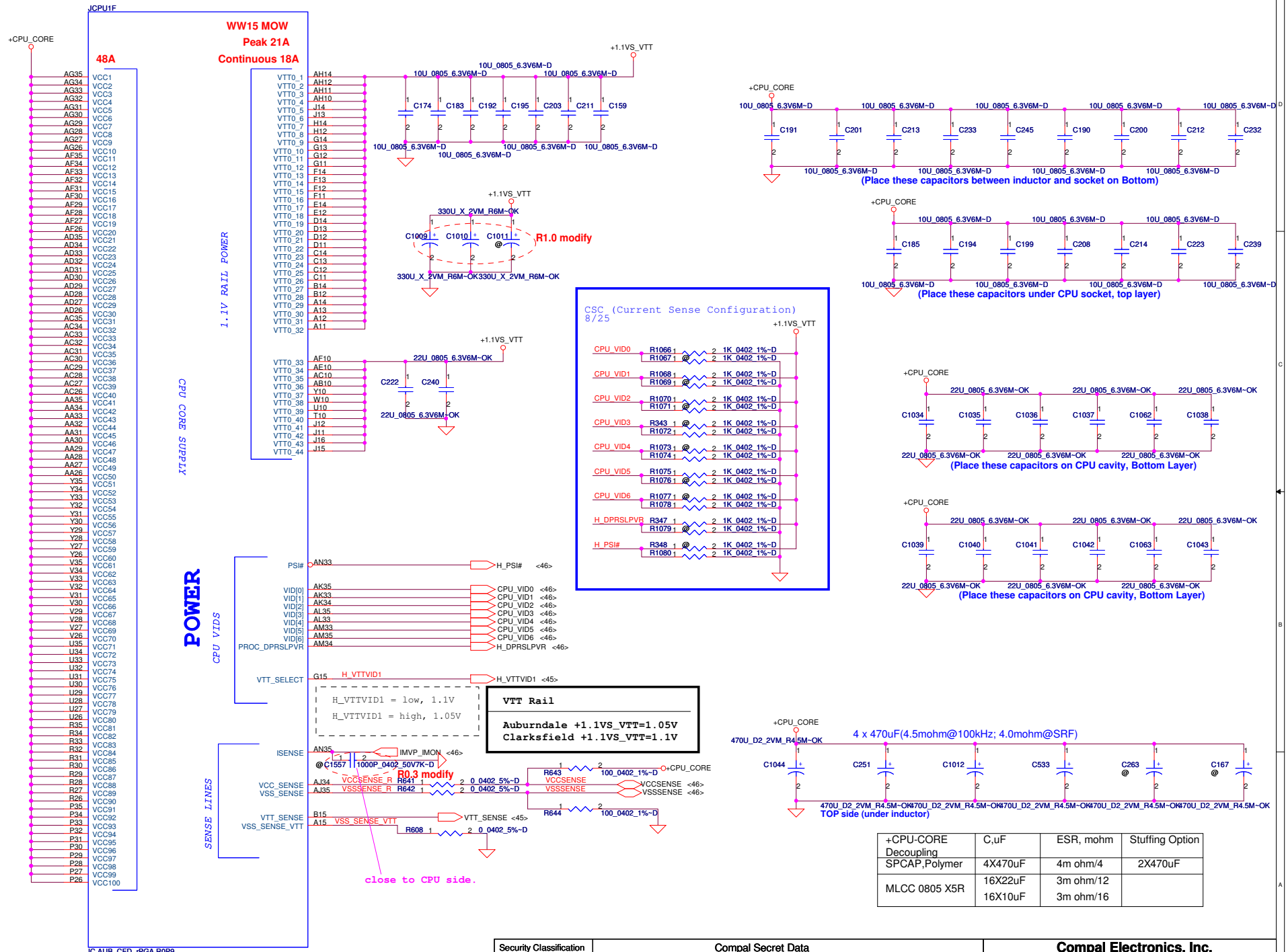

+CPU-CORE Decoupling	C,uF	ESR, mohm	Stuffing Option
SPCAP,Polymer	4X470uF	4m ohm/4	2X470uF
MLCC 0805 X5R	16X22uF 16X10uF	3m ohm/12 3m ohm/16	

Security Classification	Compal Secret Data		
Issued Date	2009/09/21	Deciphered Date	2010/09/21

THIS SHEET OF ENGINEERING DRAWING IS THE PROPRIETARY PROPERTY OF COMPAL ELECTRONICS, INC. AND CONTAINS CONFIDENTIAL AND TRADE SECRET INFORMATION. THIS SHEET MAY NOT BE TRANSFERED FROM THE CUSTODY OF THE COMPETENT DIVISION OF R&D DEPARTMENT EXCEPT AS AUTHORIZED BY COMPAL ELECTRONICS, INC. NEITHER THIS SHEET NOR THE INFORMATION IT CONTAINS MAY BE USED BY OR DISCLOSED TO ANY THIRD PARTY WITHOUT PRIOR WRITTEN CONSENT OF COMPAL ELECTRONICS, INC.

Compal Electronics, Inc.

Title: **PROCESSOR (4/6) PWR,Bypass**

Size: Custom | Document Number: NAT02 M/B LA-5154P Schematic | Rev: 1.0

Date: Thursday, November 26, 2009 | Sheet 8 of 49

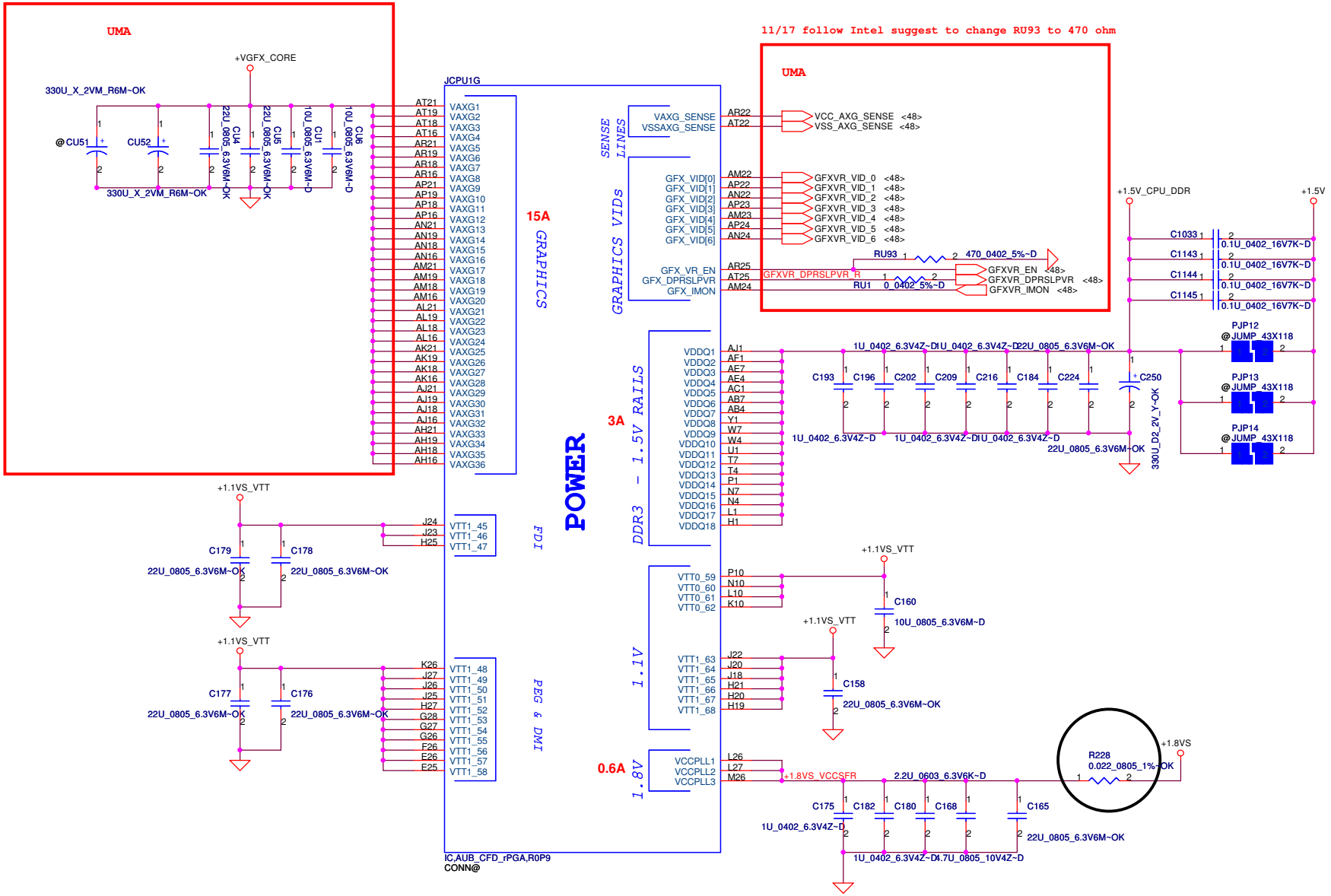

Security Classification	Compal Secret Data		
Issued Date	2009/09/21	Deciphered Date	2010/09/21

THIS SHEET OF ENGINEERING DRAWING IS THE PROPRIETARY PROPERTY OF COMPAL ELECTRONICS, INC. AND CONTAINS CONFIDENTIAL AND TRADE SECRET INFORMATION. THIS SHEET MAY NOT BE TRANSFERED FROM THE CUSTODY OF THE COMPETENT DIVISION OF R&D DEPARTMENT EXCEPT AS AUTHORIZED BY COMPAL ELECTRONICS, INC. NEITHER THIS SHEET NOR THE INFORMATION IT CONTAINS MAY BE USED BY OR DISCLOSED TO ANY THIRD PARTY WITHOUT PRIOR WRITTEN CONSENT OF COMPAL ELECTRONICS, INC.

Compal Electronics, Inc.

Title: **PROCESSOR (5/6) PWR**

Size: Custom | Document Number: NAT02 M/B LA-5154P Schematic | Rev: 1.0

Date: Thursday, November 26, 2009 | Sheet 9 of 49

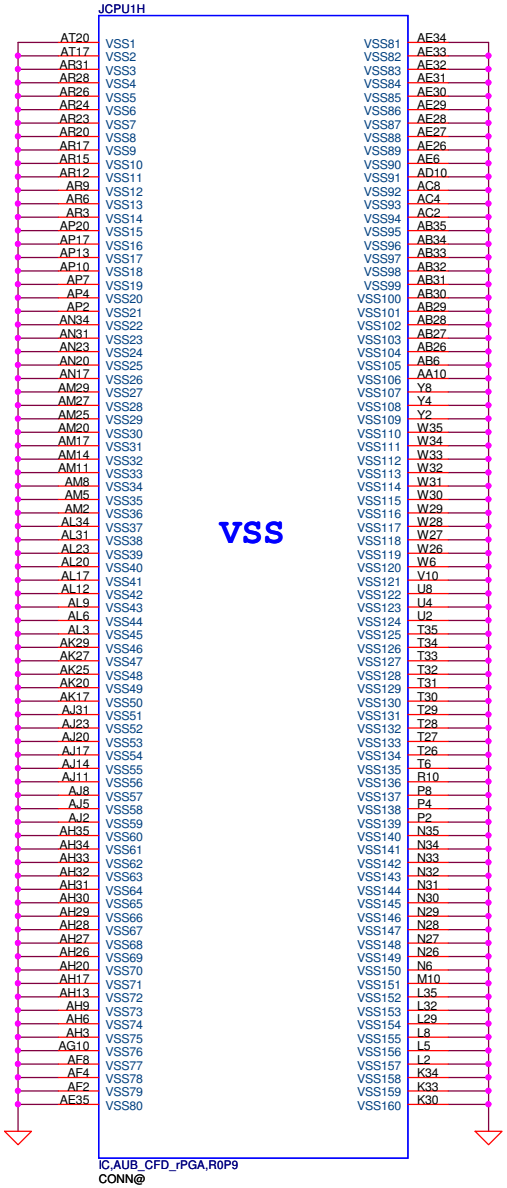

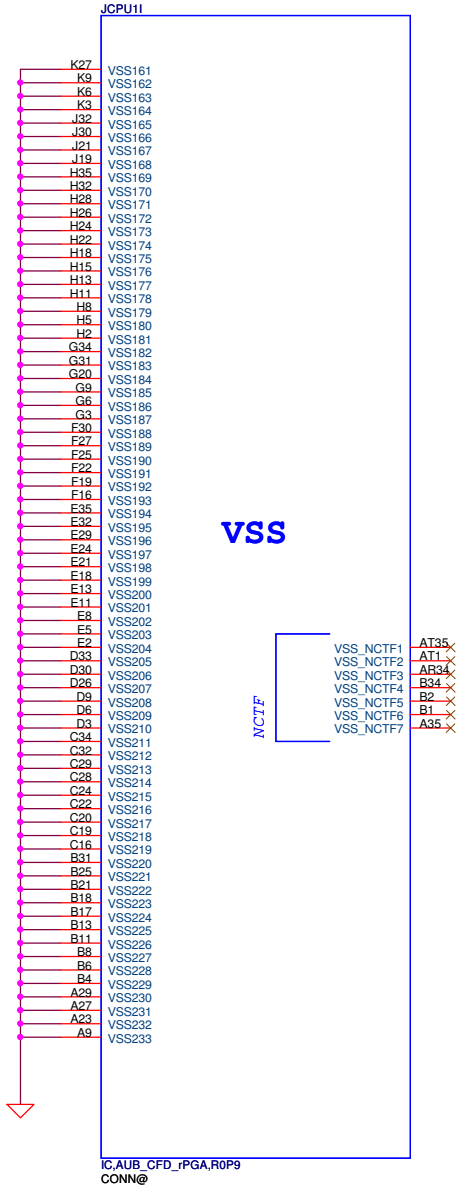

Security Classification	Compal Secret Data		
Issued Date	2009/09/21	Deciphered Date	2010/09/21

THIS SHEET OF ENGINEERING DRAWING IS THE PROPRIETARY PROPERTY OF COMPAL ELECTRONICS, INC. AND CONTAINS CONFIDENTIAL AND TRADE SECRET INFORMATION. THIS SHEET MAY NOT BE TRANSFERED FROM THE CUSTODY OF THE COMPETENT DIVISION OF R&D DEPARTMENT EXCEPT AS AUTHORIZED BY COMPAL ELECTRONICS, INC. NEITHER THIS SHEET NOR THE INFORMATION IT CONTAINS MAY BE USED BY OR DISCLOSED TO ANY THIRD PARTY WITHOUT PRIOR WRITTEN CONSENT OF COMPAL ELECTRONICS, INC.

Compal Electronics, Inc.

Title: **PROCESSOR (6/6) VSS**

Size: Custom | Document Number: NAT02 M/B LA-5154P Schematic | Rev: 1.0

Date: Thursday, November 26, 2009 | Sheet 10 of 49

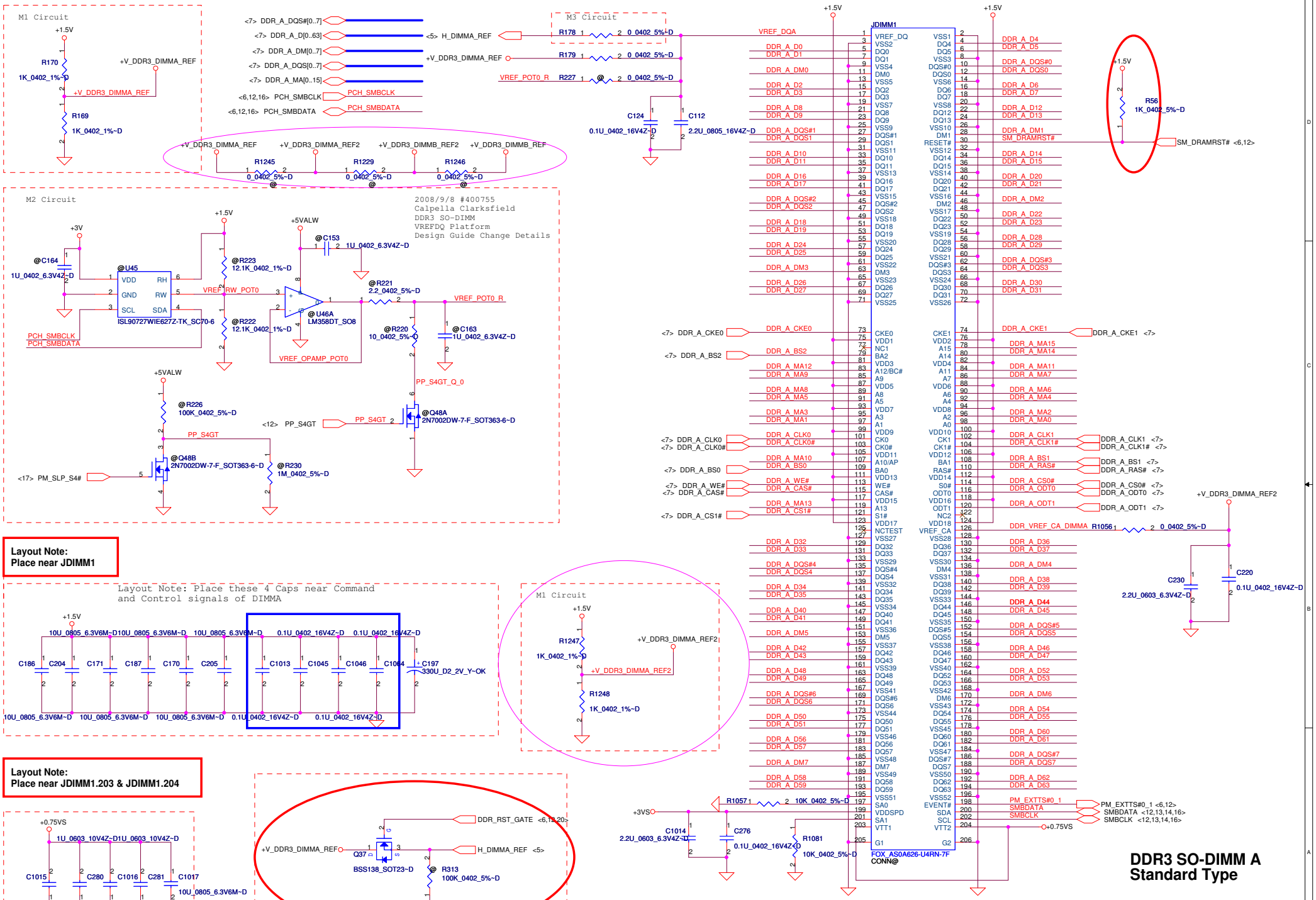

Security Classification	Compal Secret Data		
Issued Date	2009/09/21	Deciphered Date	2010/09/21

THIS SHEET OF ENGINEERING DRAWING IS THE PROPRIETARY PROPERTY OF COMPAL ELECTRONICS, INC. AND CONTAINS CONFIDENTIAL AND TRADE SECRET INFORMATION. THIS SHEET MAY NOT BE TRANSFERED FROM THE CUSTODY OF THE COMPETENT DIVISION OF R&D DEPARTMENT EXCEPT AS AUTHORIZED BY COMPAL ELECTRONICS, INC. NEITHER THIS SHEET NOR THE INFORMATION IT CONTAINS MAY BE USED BY OR DISCLOSED TO ANY THIRD PARTY WITHOUT PRIOR WRITTEN CONSENT OF COMPAL ELECTRONICS, INC.

Compal Electronics, Inc.

Title: DDRIII-SODIMM SLOT1

Size: Custom | Document Number: NAT02 M/B LA-5154P Schematic | Rev: 1.0

Date: Thursday, November 26, 2009 | Sheet 11 of 49

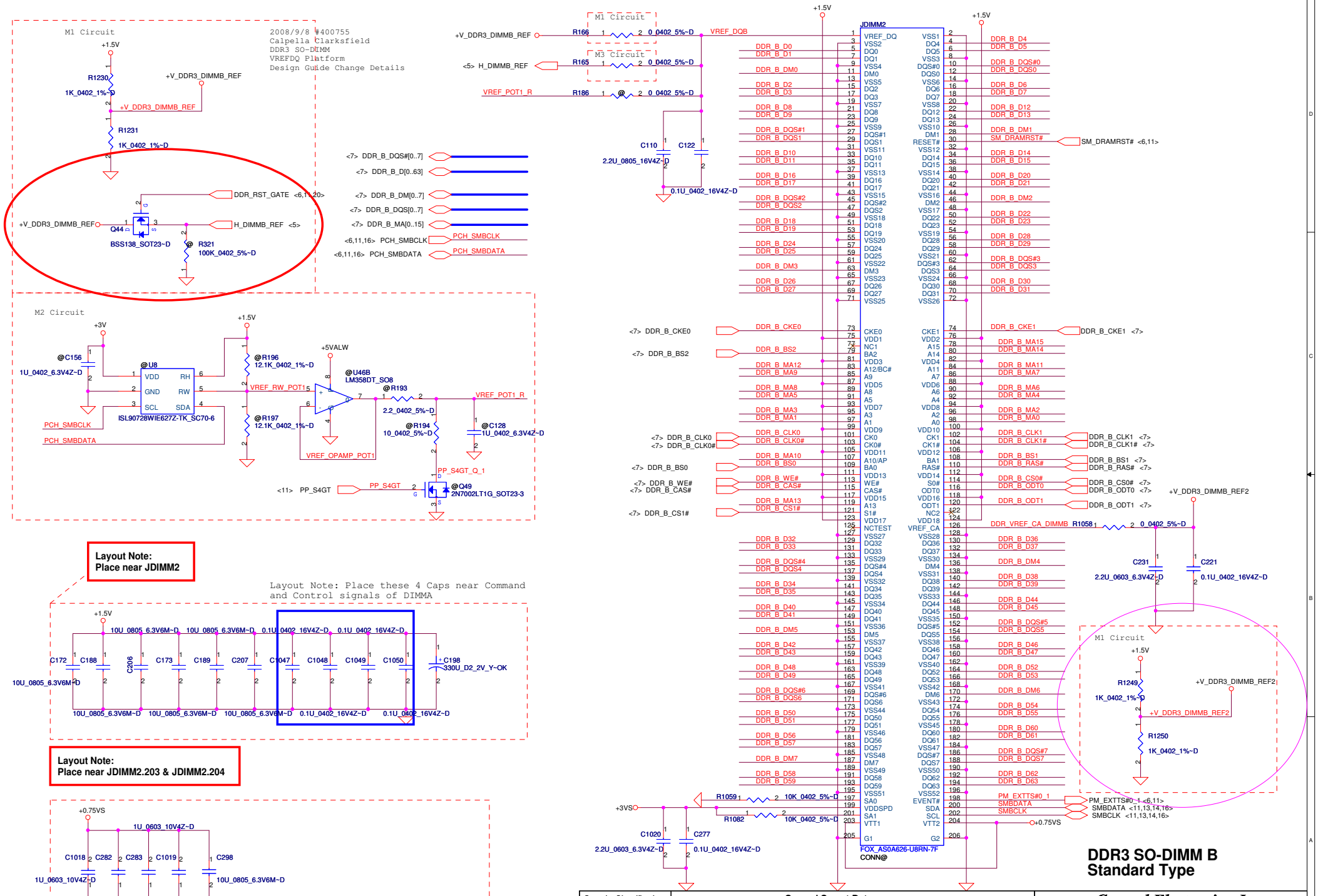

Security Classification	Compal Secret Data		
Issued Date	2009/09/21	Deciphered Date	2010/09/21

THIS SHEET OF ENGINEERING DRAWING IS THE PROPRIETARY PROPERTY OF COMPAL ELECTRONICS, INC. AND CONTAINS CONFIDENTIAL AND TRADE SECRET INFORMATION. THIS SHEET MAY NOT BE TRANSFERED FROM THE CUSTODY OF THE COMPETENT DIVISION OF R&D DEPARTMENT EXCEPT AS AUTHORIZED BY COMPAL ELECTRONICS, INC. NEITHER THIS SHEET NOR THE INFORMATION IT CONTAINS MAY BE USED BY OR DISCLOSED TO ANY THIRD PARTY WITHOUT PRIOR WRITTEN CONSENT OF COMPAL ELECTRONICS, INC.

Title	Compal Electronics, Inc.
	DDRIII-SODIMM SLOT2
Size / Document Number	NAT02 M/B LA-5154P Schematic
Rev	1.0
Date: Thursday, November 26, 2009	Sheet 12 of 49

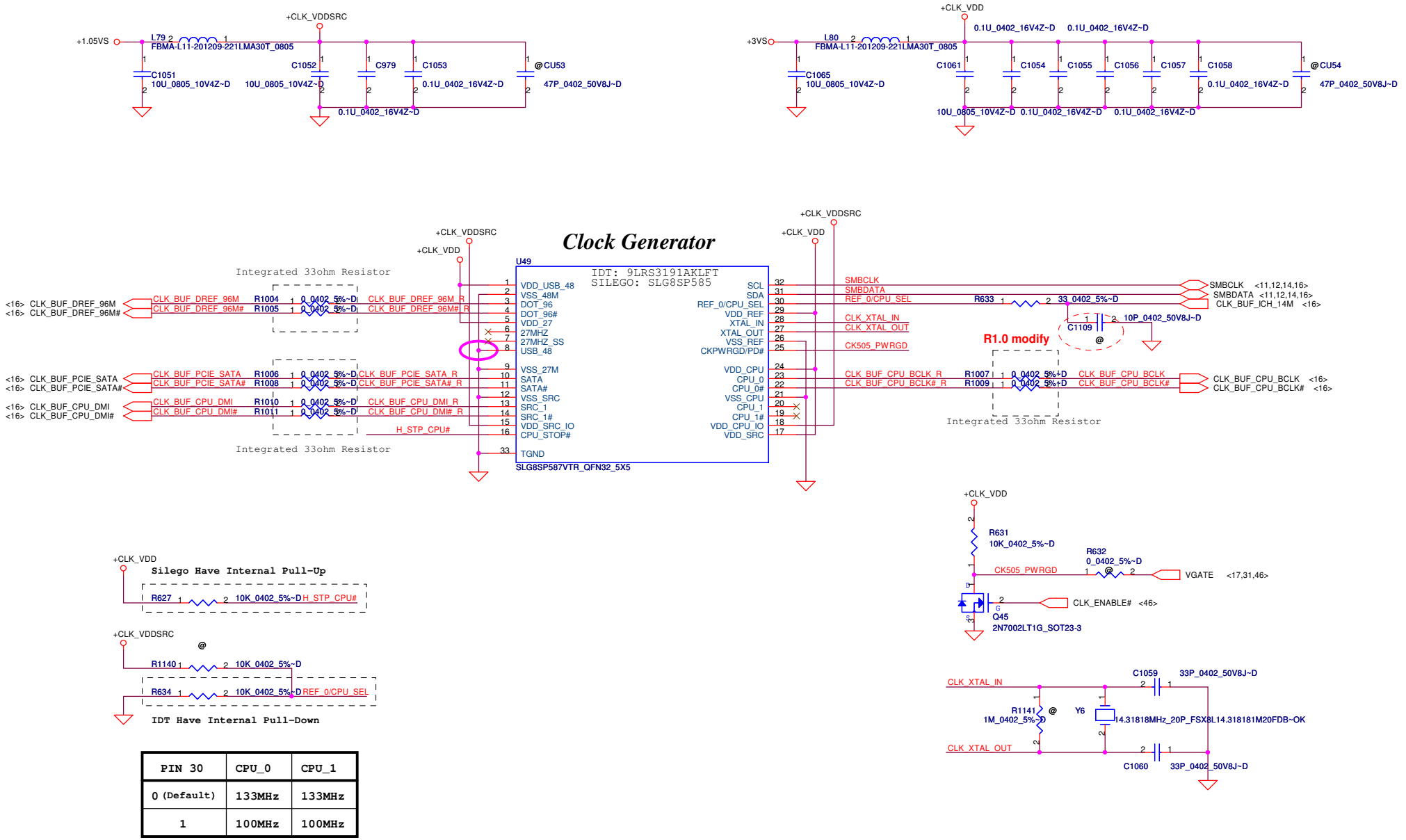

PIN 30	CPU_0	CPU_1
0 (Default)	133MHz	133MHz
1	100MHz	100MHz

Security Classification	Compal Secret Data		
Issued Date	2009/09/21	Deciphered Date	2010/09/21

THIS SHEET OF ENGINEERING DRAWING IS THE PROPRIETARY PROPERTY OF COMPAL ELECTRONICS, INC. AND CONTAINS CONFIDENTIAL AND TRADE SECRET INFORMATION. THIS SHEET MAY NOT BE TRANSFERED FROM THE CUSTODY OF THE COMPETENT DIVISION OF R&D DEPARTMENT EXCEPT AS AUTHORIZED BY COMPAL ELECTRONICS, INC. NEITHER THIS SHEET NOR THE INFORMATION IT CONTAINS MAY BE USED BY OR DISCLOSED TO ANY THIRD PARTY WITHOUT PRIOR WRITTEN CONSENT OF COMPAL ELECTRONICS, INC.

Compal Electronics, Inc.

Title: **Clock Generator (CK505)**

Size: Custom | Document Number: NAT02 M/B LA-5154P Schematic | Rev: 1.0

Date: Thursday, November 26, 2009 | Sheet 13 of 49

FAN Control circuit

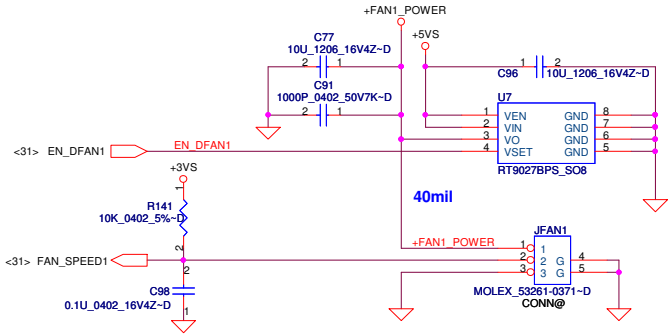

Free Fall Sensor

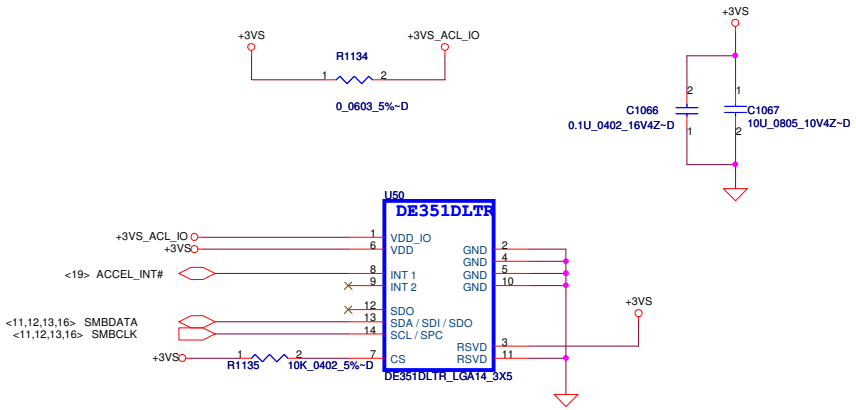

Must be placed in the center of the system.

P/N : SA000039C00 (S IC DE351DLTR LGA 14P MOTION SENSOR)

Power Button

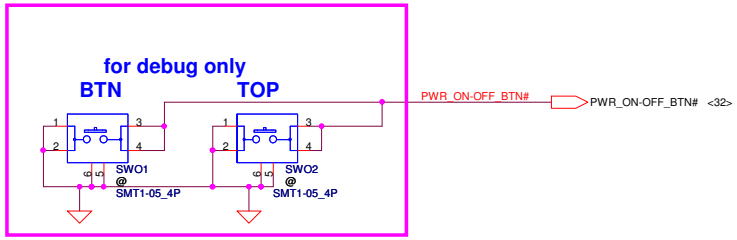

Security Classification	Compal Secret Data			Compal Electronics, Inc.
Issued Date	2009/09/21	Deciphered Date	2010/09/21	Title: FAN & Screw Hole
				Size: B; Document Number: NAT02 M/B LA-5154P Schematic; Rev: 1.0
				Date: Thursday, November 26, 2009; Sheet 14 of 49

THIS SHEET OF ENGINEERING DRAWING IS THE PROPRIETARY PROPERTY OF COMPAL ELECTRONICS, INC. AND CONTAINS CONFIDENTIAL AND TRADE SECRET INFORMATION. THIS SHEET MAY NOT BE TRANSFERED FROM THE CUSTODY OF THE COMPETENT DIVISION OF R&D DEPARTMENT EXCEPT AS AUTHORIZED BY COMPAL ELECTRONICS, INC. NEITHER THIS SHEET NOR THE INFORMATION IT CONTAINS MAY BE USED BY OR DISCLOSED TO ANY THIRD PARTY WITHOUT PRIOR WRITTEN CONSENT OF COMPAL ELECTRONICS, INC.

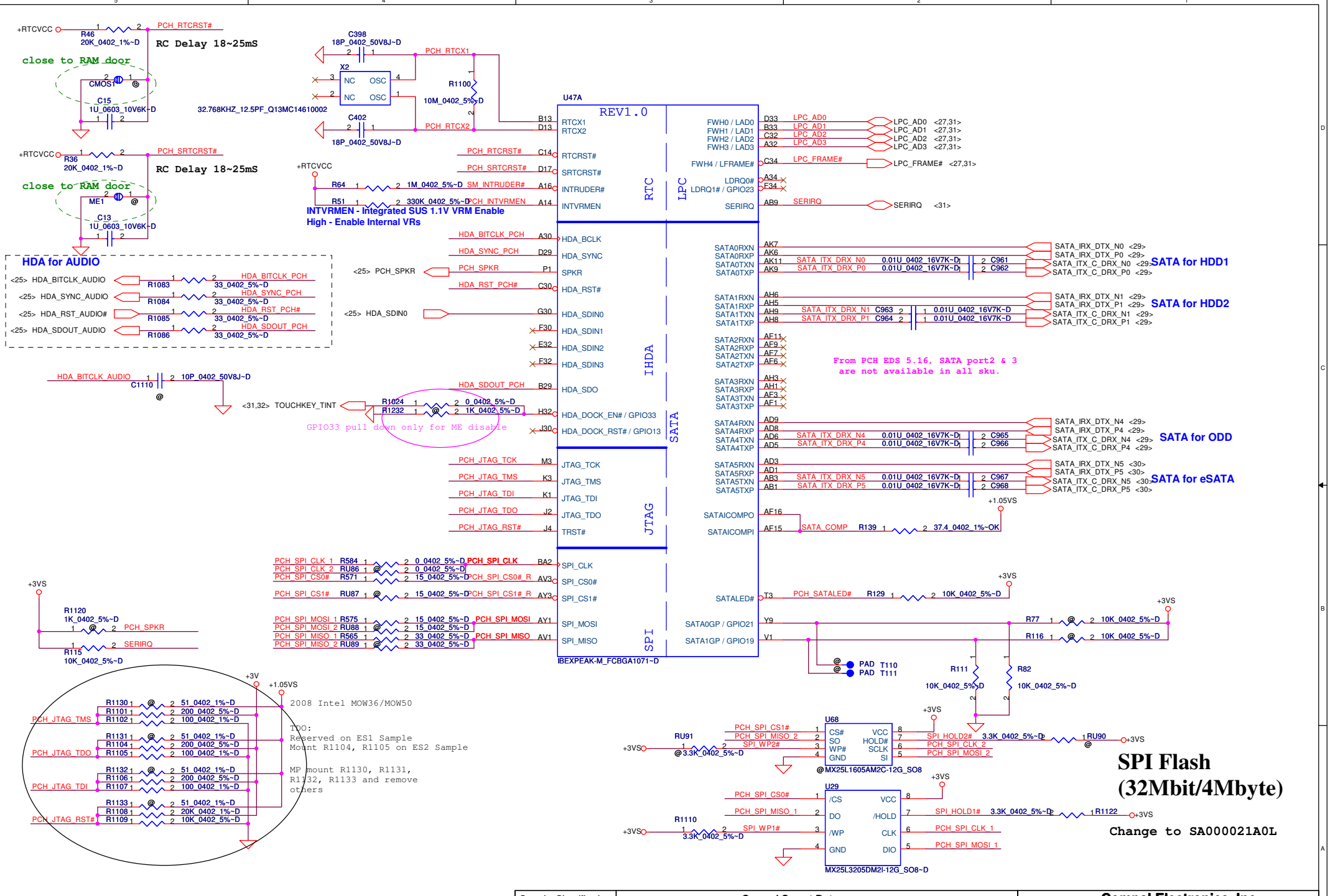

Security Classification	Compal Secret Data		
Issued Date	2009/09/21	Deciphered Date	2010/09/21

THIS SHEET OF ENGINEERING DRAWING IS THE PROPRIETARY PROPERTY OF COMPAL ELECTRONICS, INC. AND CONTAINS CONFIDENTIAL AND TRADE SECRET INFORMATION. THIS SHEET MAY NOT BE TRANSFERED FROM THE CUSTODY OF THE COMPETENT DIVISION OF R&D DEPARTMENT EXCEPT AS AUTHORIZED BY COMPAL ELECTRONICS, INC. NEITHER THIS SHEET NOR THE INFORMATION IT CONTAINS MAY BE USED BY OR DISCLOSED TO ANY THIRD PARTY WITHOUT PRIOR WRITTEN CONSENT OF COMPAL ELECTRONICS, INC.

Compal Electronics, Inc.

Title: **PCH (1/9) SATA,HDA,SPI, LPC**

Size: Custom | Document Number: NAT02 M/B LA-5154P Schematic | Rev: 1.0

Date: Thursday, November 26, 2009 | Sheet 15 of 49

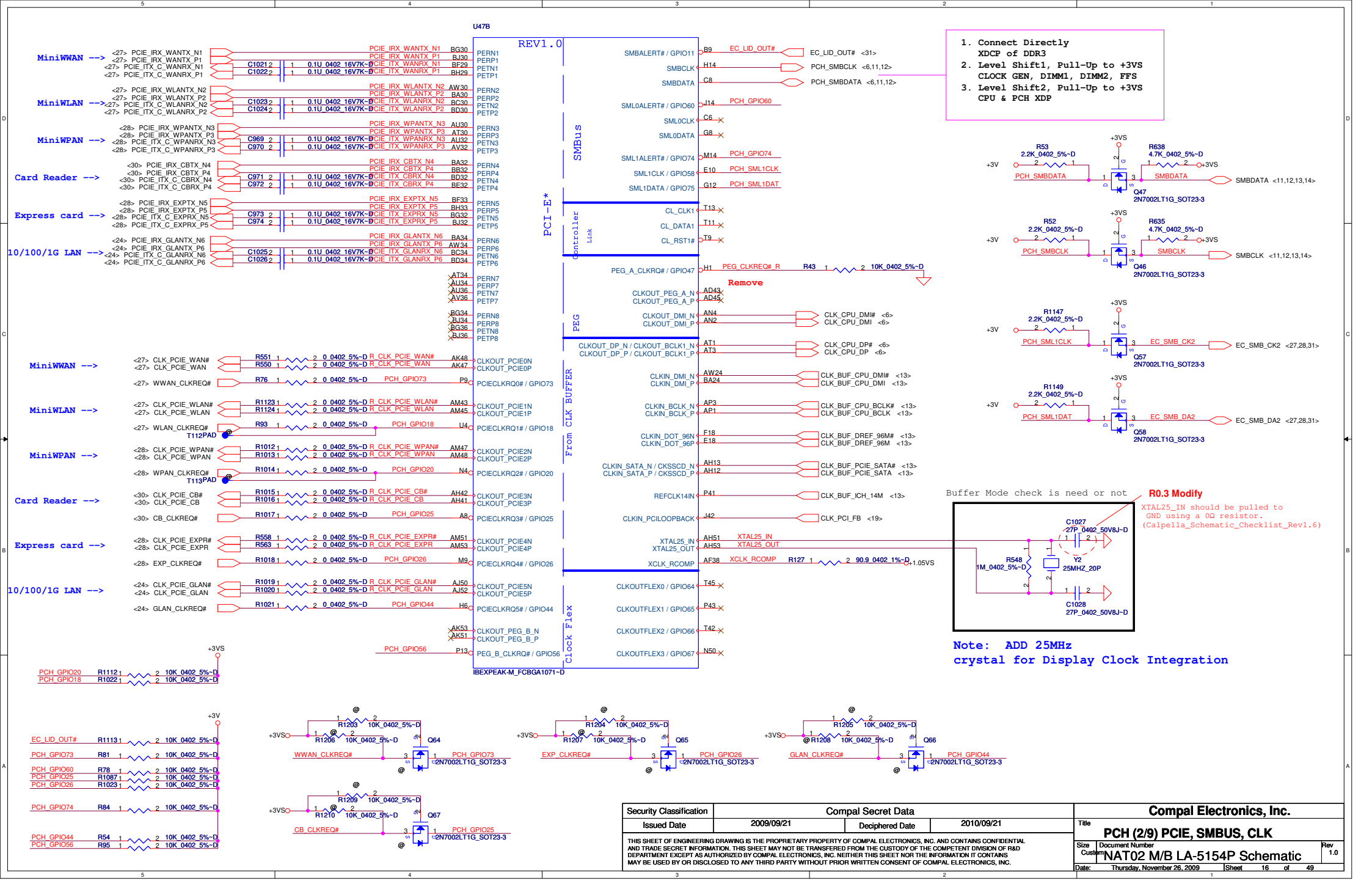

Security Classification	Compal Secret Data		
Issued Date	2009/09/21	Deciphered Date	2010/09/21

THIS SHEET OF ENGINEERING DRAWING IS THE PROPRIETARY PROPERTY OF COMPAL ELECTRONICS, INC. AND CONTAINS CONFIDENTIAL AND TRADE SECRET INFORMATION. THIS SHEET MAY NOT BE TRANSFERED FROM THE CUSTODY OF THE COMPETENT DIVISION OF R&D DEPARTMENT EXCEPT AS AUTHORIZED BY COMPAL ELECTRONICS, INC. NEITHER THIS SHEET NOR THE INFORMATION IT CONTAINS MAY BE USED BY OR DISCLOSED TO ANY THIRD PARTY WITHOUT PRIOR WRITTEN CONSENT OF COMPAL ELECTRONICS, INC.

Compal Electronics, Inc.

Title: **PCH (2/9) PCIE, SMBUS, CLK**

Size: Custom | Document Number: NAT02 M/B LA-5154P Schematic | Rev: 1.0

Date: Thursday, November 26, 2009 | Sheet 16 of 49

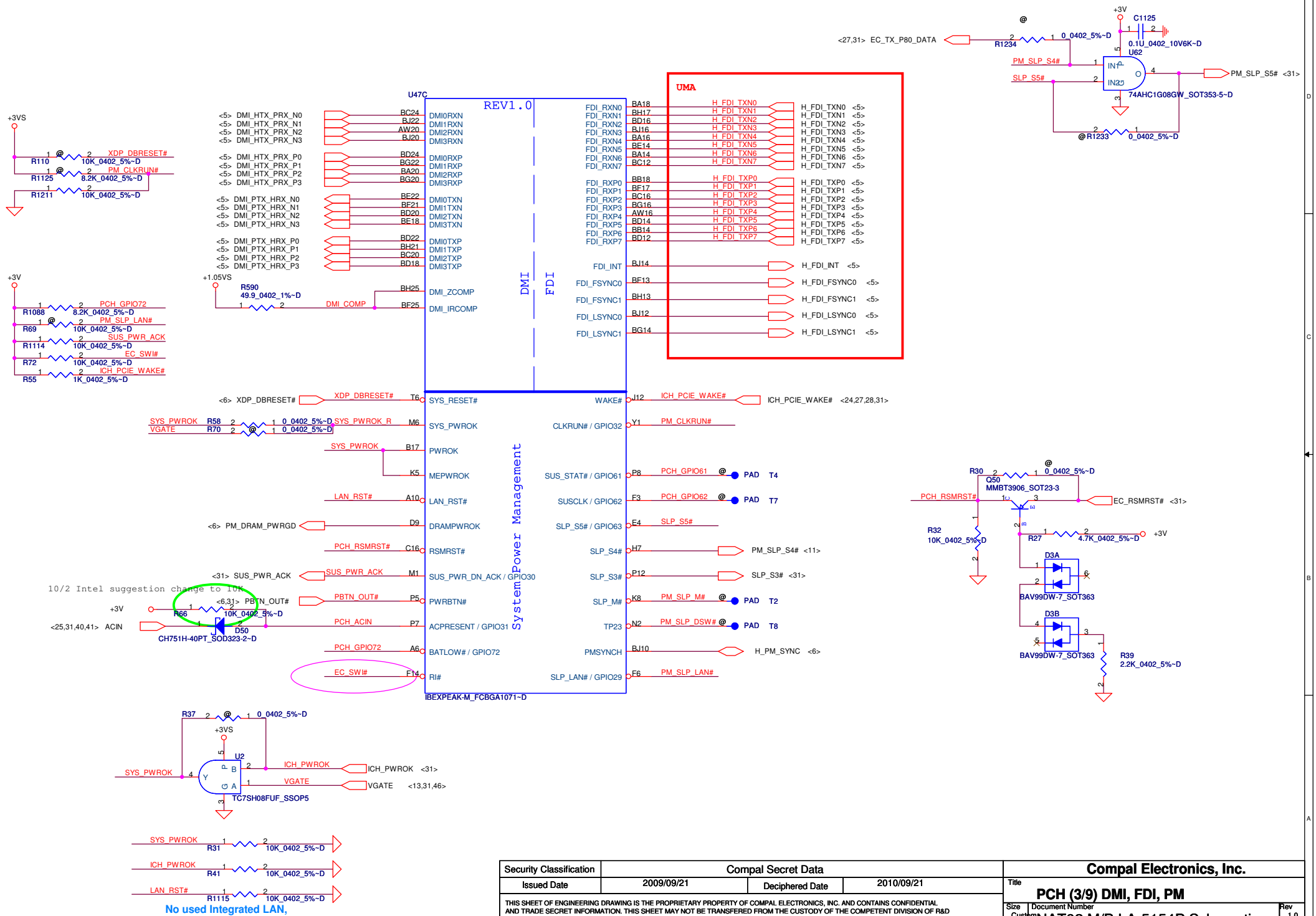

Security Classification	Compal Secret Data		
Issued Date	2009/09/21	Deciphered Date	2010/09/21

THIS SHEET OF ENGINEERING DRAWING IS THE PROPRIETARY PROPERTY OF COMPAL ELECTRONICS, INC. AND CONTAINS CONFIDENTIAL AND TRADE SECRET INFORMATION. THIS SHEET MAY NOT BE TRANSFERED FROM THE CUSTODY OF THE COMPETENT DIVISION OF R&D DEPARTMENT EXCEPT AS AUTHORIZED BY COMPAL ELECTRONICS, INC. NEITHER THIS SHEET NOR THE INFORMATION IT CONTAINS MAY BE USED BY OR DISCLOSED TO ANY THIRD PARTY WITHOUT PRIOR WRITTEN CONSENT OF COMPAL ELECTRONICS, INC.

Compal Electronics, Inc.

Title: **PCH (3/9) DMI, FDI, PM**

Size: Custom | Document Number: NAT02 M/B LA-5154P Schematic | Rev: 1.0

Date: Thursday, November 26, 2009 | Sheet 17 of 49

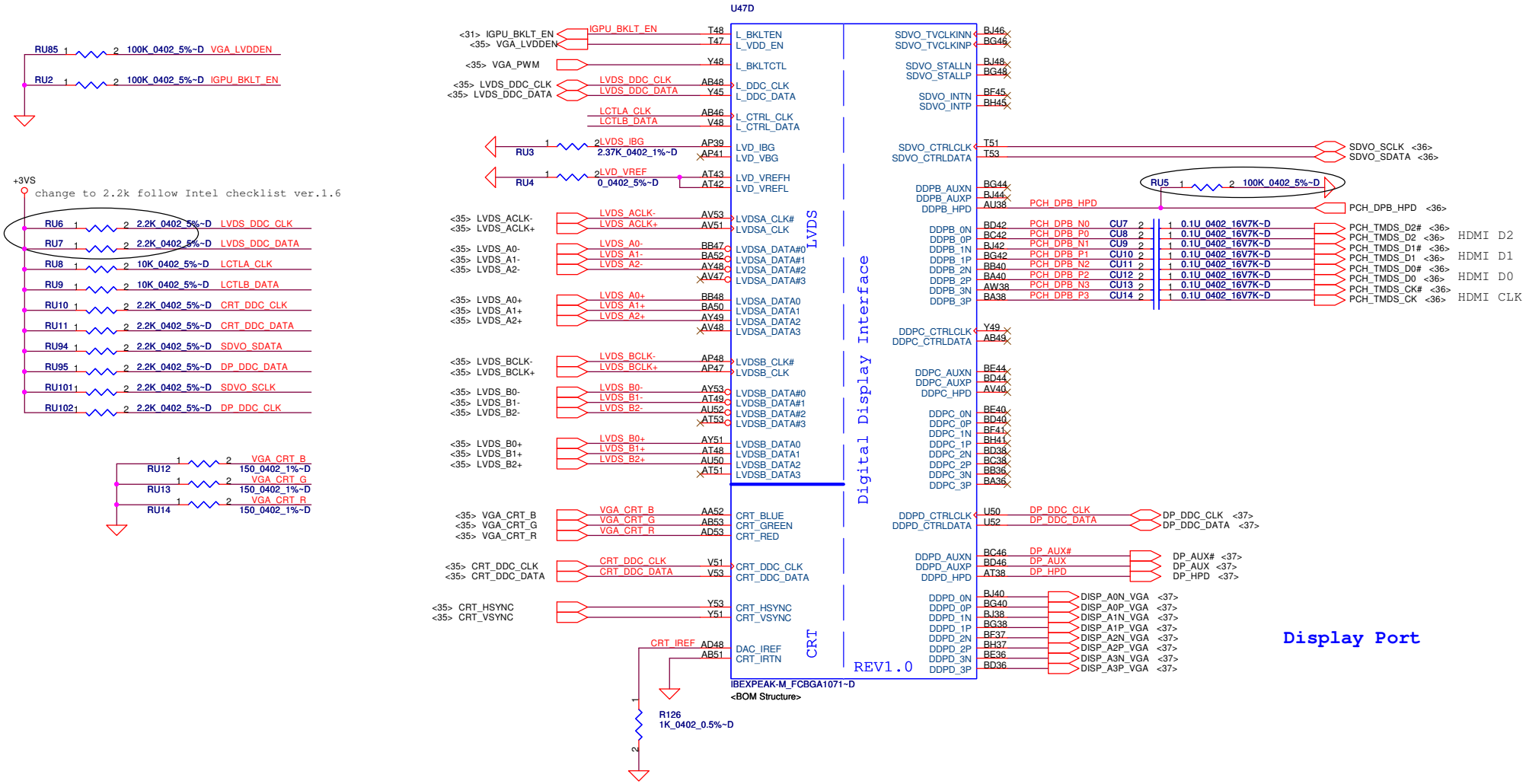

Security Classification	Compal Secret Data		
Issued Date	2009/09/21	Deciphered Date	2010/09/21

THIS SHEET OF ENGINEERING DRAWING IS THE PROPRIETARY PROPERTY OF COMPAL ELECTRONICS, INC. AND CONTAINS CONFIDENTIAL AND TRADE SECRET INFORMATION. THIS SHEET MAY NOT BE TRANSFERED FROM THE CUSTODY OF THE COMPETENT DIVISION OF R&D DEPARTMENT EXCEPT AS AUTHORIZED BY COMPAL ELECTRONICS, INC. NEITHER THIS SHEET NOR THE INFORMATION IT CONTAINS MAY BE USED BY OR DISCLOSED TO ANY THIRD PARTY WITHOUT PRIOR WRITTEN CONSENT OF COMPAL ELECTRONICS, INC.

Compal Electronics, Inc.

Title: **PCH (4/9) LVDS, CRT, DPI**

Size: Custom | Document Number: NAT02 M/B LA-5154P Schematic | Rev: 1.0

Date: Thursday, November 26, 2009 | Sheet 18 of 49

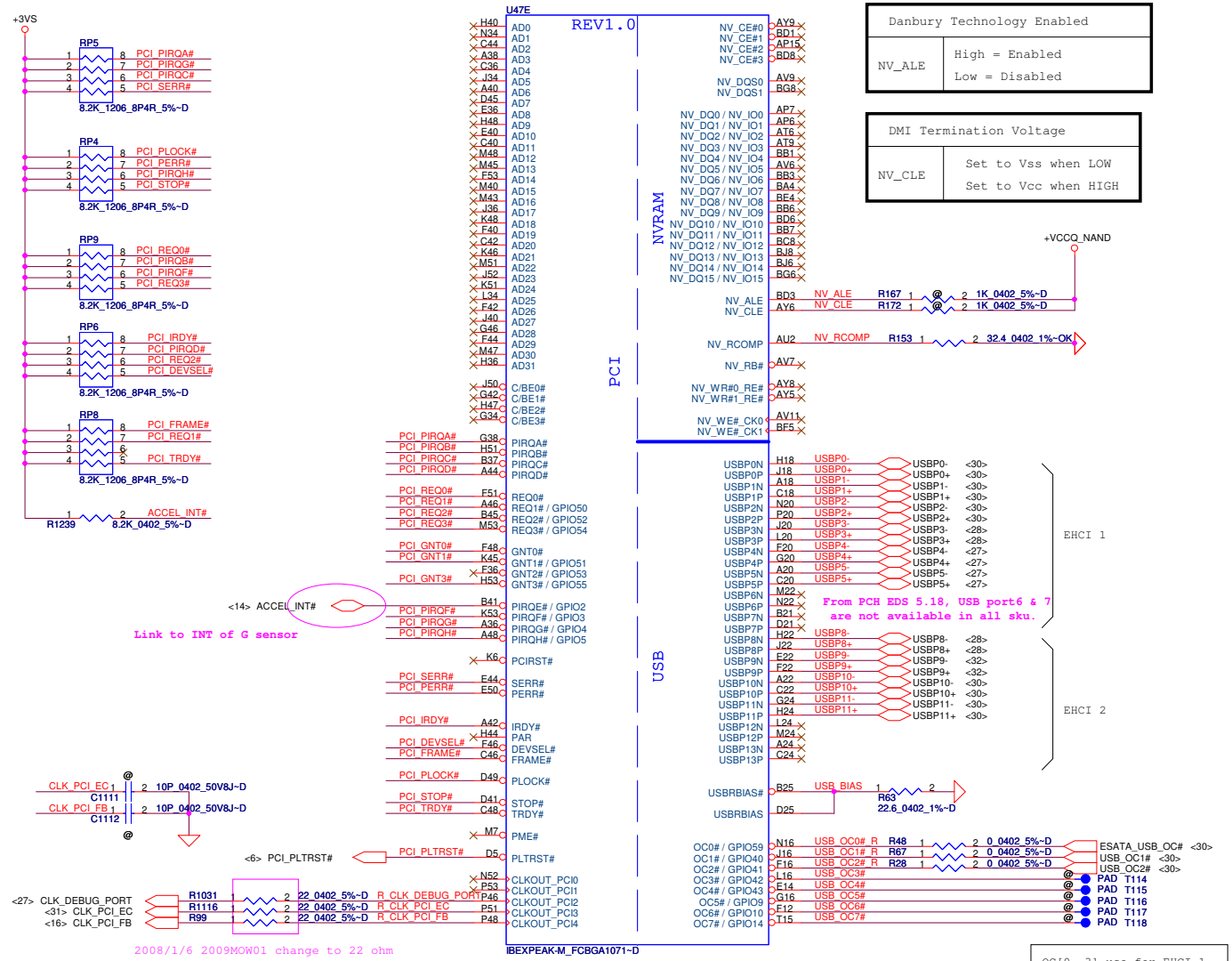

Danbury Technology Enabled	
NV_ALE	High = Enabled Low = Disabled

DMI Termination Voltage	
NV_CLE	Set to Vss when LOW Set to Vcc when HIGH

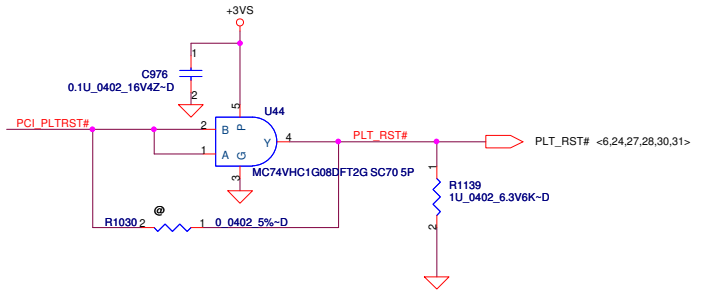

USB Port	Device
0	USB&ESATA
1	Reader board
2	USB board
3	WPAN
4	WLAN
5	WWAN
6	NC
7	NC
8	Express
9	Touch screen
10	Bluetooth
11	Camera

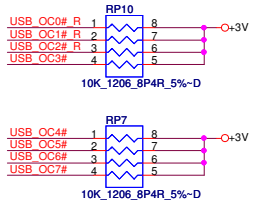

Boot BIOS Strap		
PCI_GNT#0	PCI_GNT#1	Boot BIOS Location
0	0	LPC
0	1	Reserved (NAND)
1	0	PCI
1	1	SPI

A16 swap override Strap/Top-Block Swap Override jumper	
PCI_GNT#3	Low = A16 swap High = Default

Security Classification	Compal Secret Data		
Issued Date	2009/09/21	Deciphered Date	2010/09/21

THIS SHEET OF ENGINEERING DRAWING IS THE PROPRIETARY PROPERTY OF COMPAL ELECTRONICS, INC. AND CONTAINS CONFIDENTIAL AND TRADE SECRET INFORMATION. THIS SHEET MAY NOT BE TRANSFERED FROM THE CUSTODY OF THE COMPETENT DIVISION OF R&D DEPARTMENT EXCEPT AS AUTHORIZED BY COMPAL ELECTRONICS, INC. NEITHER THIS SHEET NOR THE INFORMATION IT CONTAINS MAY BE USED BY OR DISCLOSED TO ANY THIRD PARTY WITHOUT PRIOR WRITTEN CONSENT OF COMPAL ELECTRONICS, INC.

Compal Electronics, Inc.

Title: **PCH (5/9) PCI, USB, VRAM**

Size: Custom | Document Number: NAT02 M/B LA-5154P Schematic | Rev: 1.0

Date: Thursday, November 26, 2009 | Sheet 19 of 49

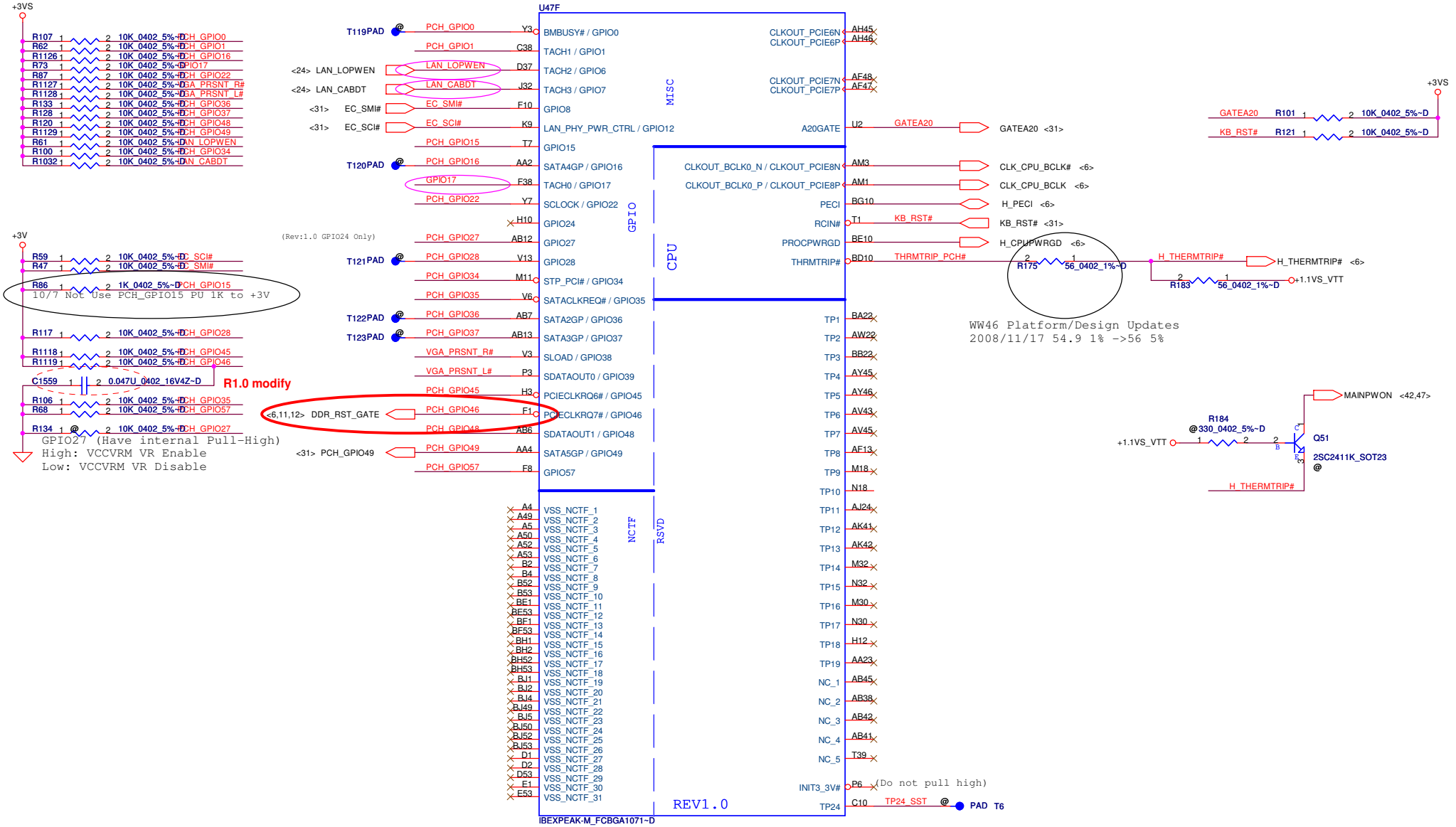

Security Classification	Compal Secret Data		
Issued Date	2009/09/21	Deciphered Date	2010/09/21

THIS SHEET OF ENGINEERING DRAWING IS THE PROPRIETARY PROPERTY OF COMPAL ELECTRONICS, INC. AND CONTAINS CONFIDENTIAL AND TRADE SECRET INFORMATION. THIS SHEET MAY NOT BE TRANSFERED FROM THE CUSTODY OF THE COMPETENT DIVISION OF R&D DEPARTMENT EXCEPT AS AUTHORIZED BY COMPAL ELECTRONICS, INC. NEITHER THIS SHEET NOR THE INFORMATION IT CONTAINS MAY BE USED BY OR DISCLOSED TO ANY THIRD PARTY WITHOUT PRIOR WRITTEN CONSENT OF COMPAL ELECTRONICS, INC.

Compal Electronics, Inc.

Title: **PCH (6/9) GPIO, CPU, MISC**

Size: Custom | Document Number: NAT02 M/B LA-5154P Schematic | Rev: 1.0

Date: Thursday, November 26, 2009 | Sheet 20 of 49

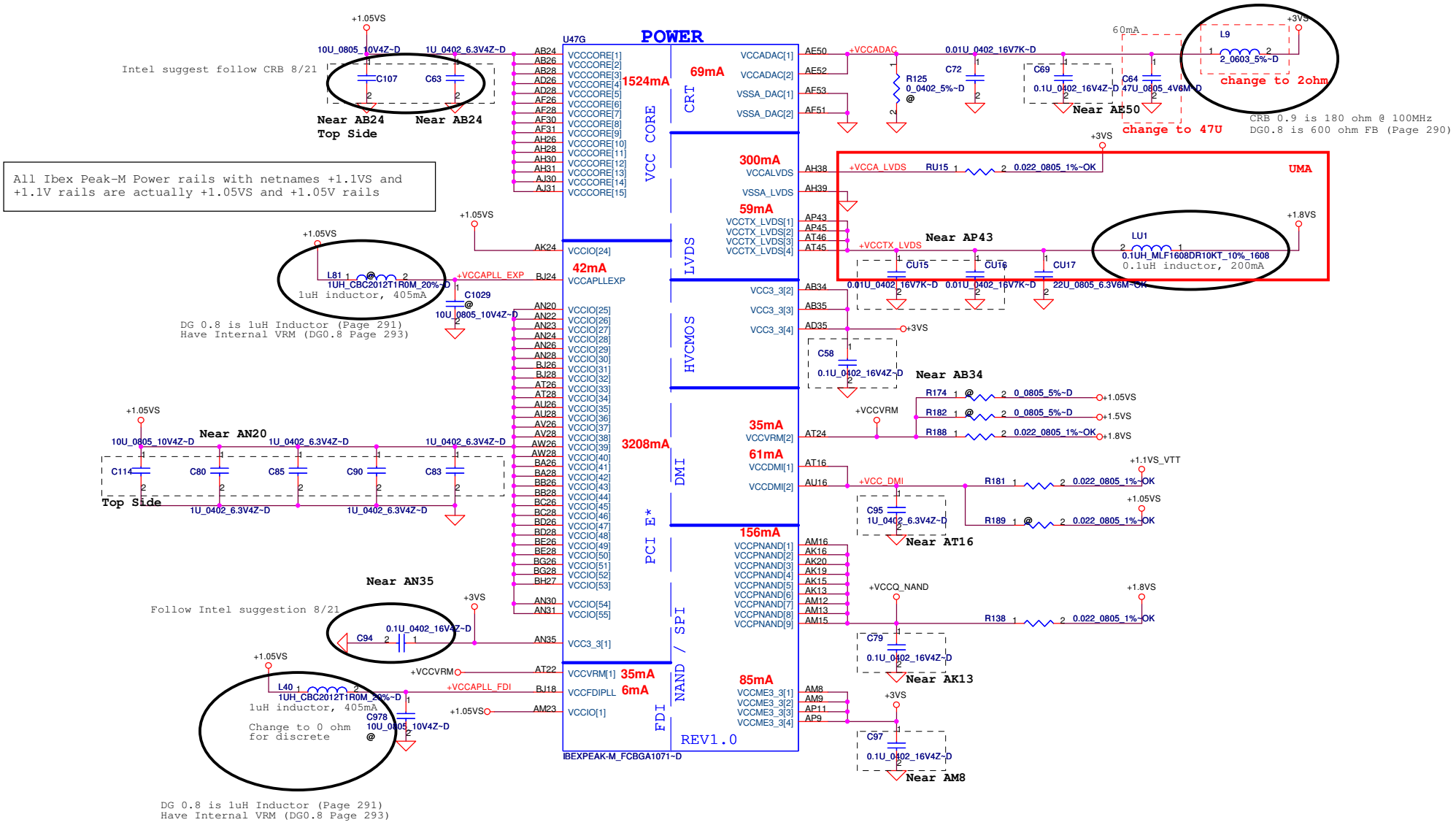

Security Classification	Compal Secret Data		
Issued Date	2009/09/21	Deciphered Date	2010/09/21

THIS SHEET OF ENGINEERING DRAWING IS THE PROPRIETARY PROPERTY OF COMPAL ELECTRONICS, INC. AND CONTAINS CONFIDENTIAL AND TRADE SECRET INFORMATION. THIS SHEET MAY NOT BE TRANSFERED FROM THE CUSTODY OF THE COMPETENT DIVISION OF R&D DEPARTMENT EXCEPT AS AUTHORIZED BY COMPAL ELECTRONICS, INC. NEITHER THIS SHEET NOR THE INFORMATION IT CONTAINS MAY BE USED BY OR DISCLOSED TO ANY THIRD PARTY WITHOUT PRIOR WRITTEN CONSENT OF COMPAL ELECTRONICS, INC.

Compal Electronics, Inc.

Title: **PCH (7/9) PWR**

Size: Custom | Document Number: NAT02 M/B LA-5154P Schematic | Rev: 1.0

Date: Thursday, November 26, 2009 | Sheet 21 of 49

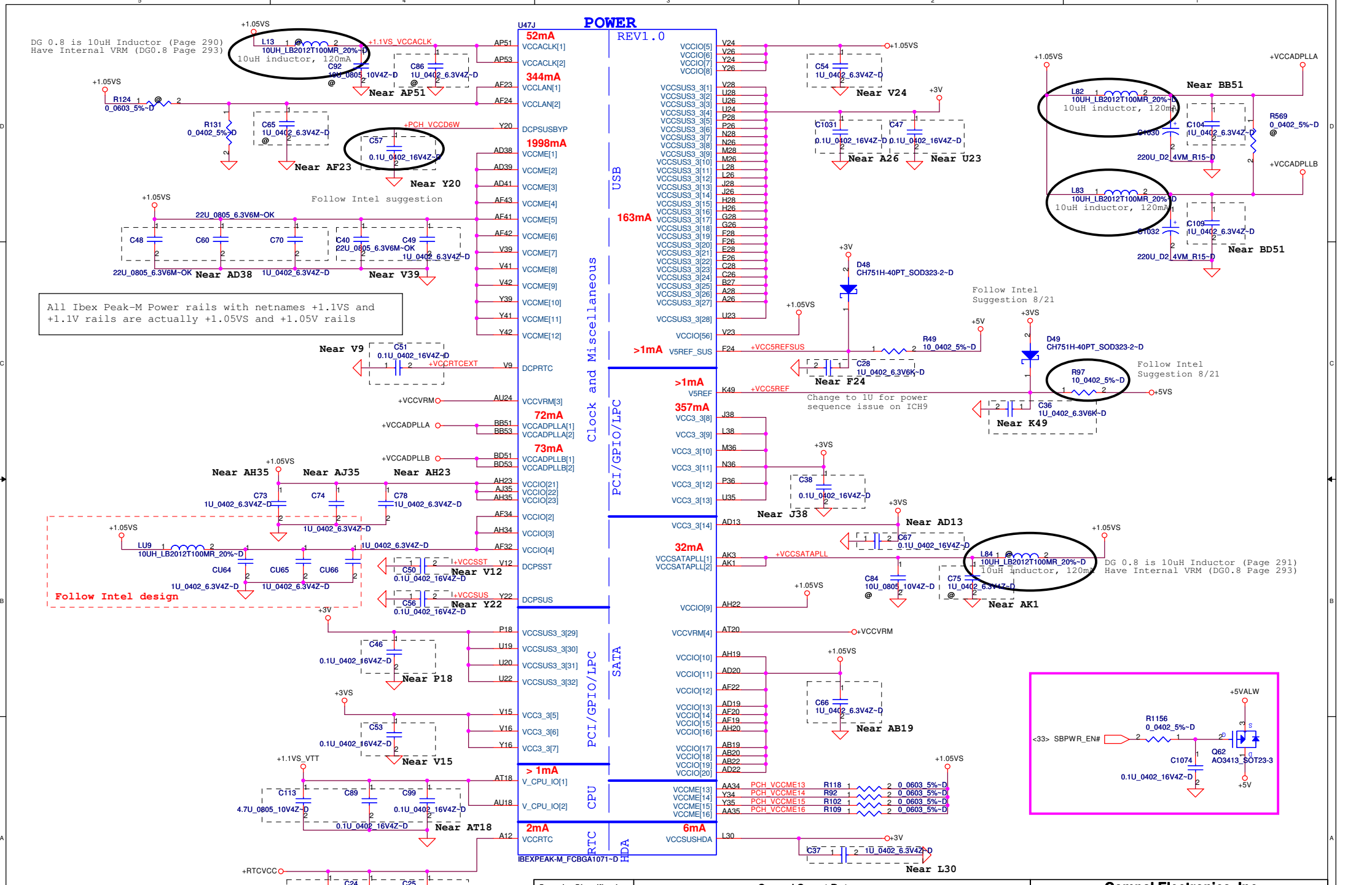

Security Classification	Compal Secret Data		
Issued Date	2009/09/21	Deciphered Date	2010/09/21

THIS SHEET OF ENGINEERING DRAWING IS THE PROPRIETARY PROPERTY OF COMPAL ELECTRONICS, INC. AND CONTAINS CONFIDENTIAL AND TRADE SECRET INFORMATION. THIS SHEET MAY NOT BE TRANSFERED FROM THE CUSTODY OF THE COMPETENT DIVISION OF R&D DEPARTMENT EXCEPT AS AUTHORIZED BY COMPAL ELECTRONICS, INC. NEITHER THIS SHEET NOR THE INFORMATION IT CONTAINS MAY BE USED BY OR DISCLOSED TO ANY THIRD PARTY WITHOUT PRIOR WRITTEN CONSENT OF COMPAL ELECTRONICS, INC.

Compal Electronics, Inc.

Title: **PCH (8/9) PWR**

Size: Custom | Document Number: NAT02 M/B LA-5154P Schematic | Rev: 1.0

Date: Thursday, November 26, 2009 | Sheet 22 of 49

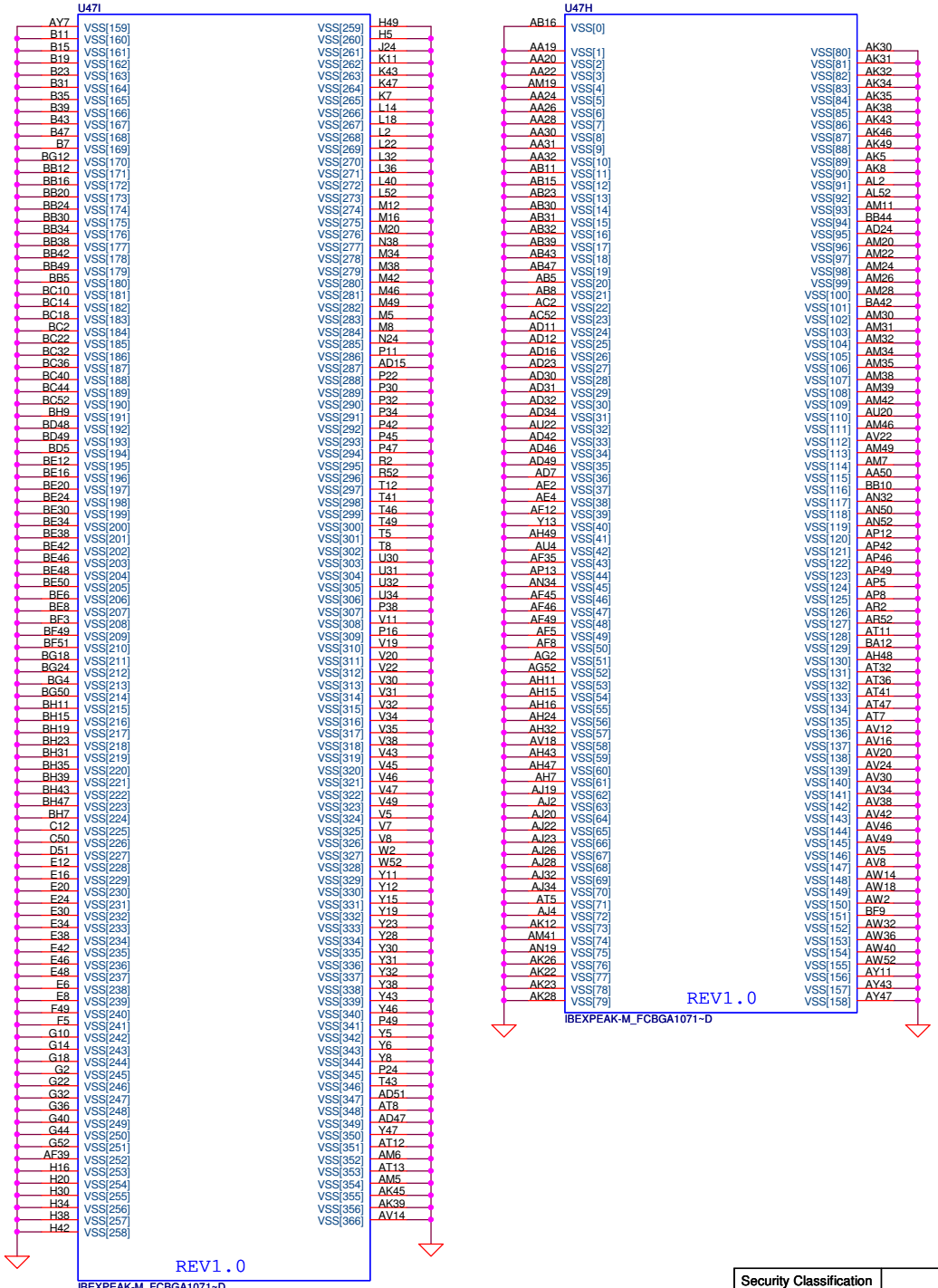

Security Classification	Compal Secret Data		
Issued Date	2009/09/21	Deciphered Date	2010/09/21

THIS SHEET OF ENGINEERING DRAWING IS THE PROPRIETARY PROPERTY OF COMPAL ELECTRONICS, INC. AND CONTAINS CONFIDENTIAL AND TRADE SECRET INFORMATION. THIS SHEET MAY NOT BE TRANSFERED FROM THE CUSTODY OF THE COMPETENT DIVISION OF R&D DEPARTMENT EXCEPT AS AUTHORIZED BY COMPAL ELECTRONICS, INC. NEITHER THIS SHEET NOR THE INFORMATION IT CONTAINS MAY BE USED BY OR DISCLOSED TO ANY THIRD PARTY WITHOUT PRIOR WRITTEN CONSENT OF COMPAL ELECTRONICS, INC.

Compal Electronics, Inc.

Title: **PCH (9/9) VSS**

Size: Custom | Document Number: NAT02 M/B LA-5154P Schematic | Rev: 1.0

Date: Thursday, November 26, 2009 | Sheet 23 of 49

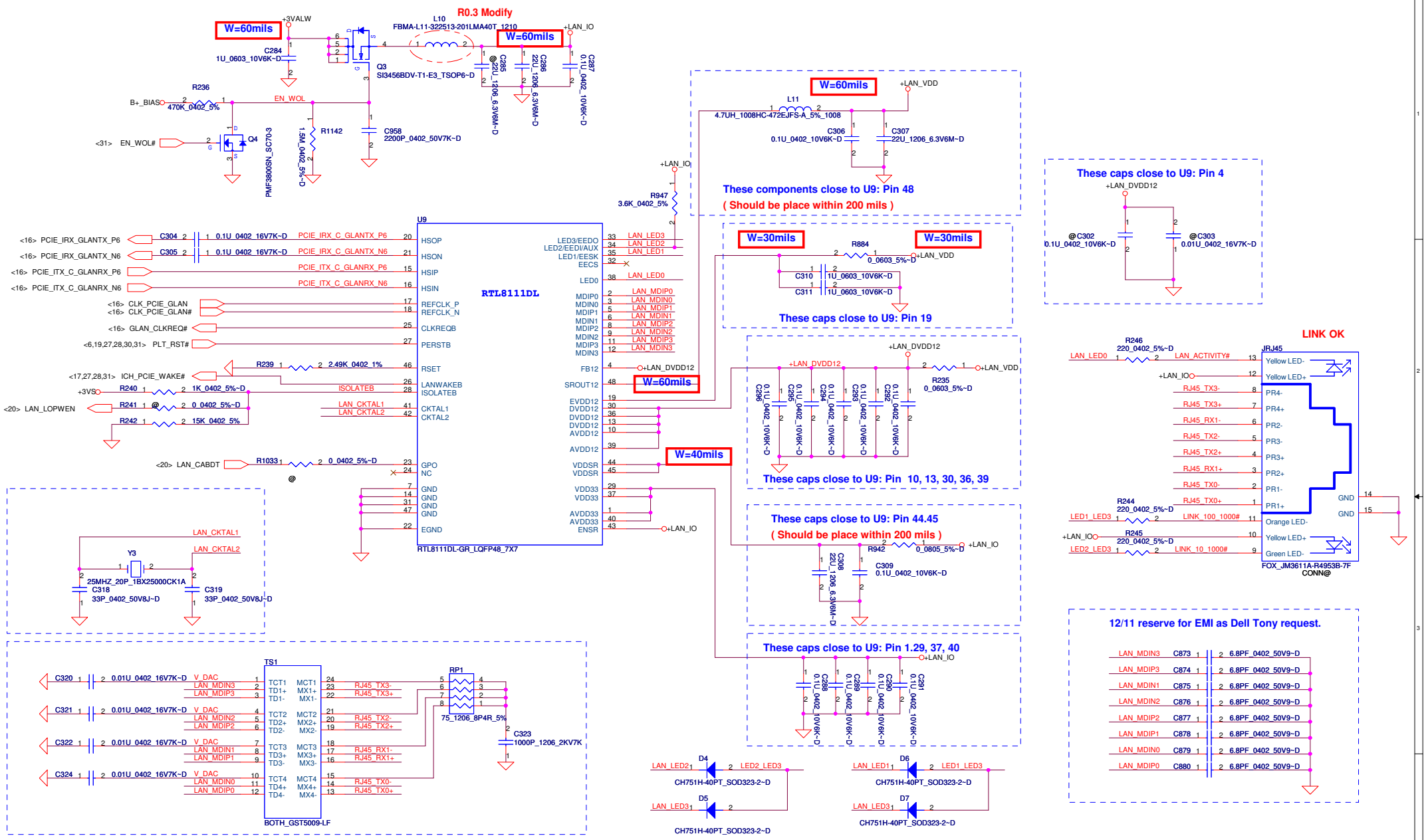

LEDS1-0	0 0	0 1	1 0	1 1
LED0	Tx / Rx	Tx / Rx	Tx	LINK10 / ACT
LED1	LINK100	LINK10 /100 / 1000	LINK	LINK100 / ACT
LED2	LINK10	LINK10 / 100	Rx	FULL
LED3	LINK1000	LINK1000	FULL	LINK1000 / ACT

Security Classification	Compal Secret Data		
Issued Date	2009/09/21	Deciphered Date	2010/09/21

THIS SHEET OF ENGINEERING DRAWING IS THE PROPRIETARY PROPERTY OF COMPAL ELECTRONICS, INC. AND CONTAINS CONFIDENTIAL AND TRADE SECRET INFORMATION. THIS SHEET MAY NOT BE TRANSFERED FROM THE CUSTODY OF THE COMPETENT DIVISION OF R&D DEPARTMENT EXCEPT AS AUTHORIZED BY COMPAL ELECTRONICS, INC. NEITHER THIS SHEET NOR THE INFORMATION IT CONTAINS MAY BE USED BY OR DISCLOSED TO ANY THIRD PARTY WITHOUT PRIOR WRITTEN CONSENT OF COMPAL ELECTRONICS, INC.

Compal Electronics, Inc.

Title: **Gigabit LAN_RTL8111DL**

Size: Custom | Document Number: NAT02 M/B LA-5154P Schematic | Rev: 1.0

Date: Thursday, November 26, 2009 | Sheet 24 of 49

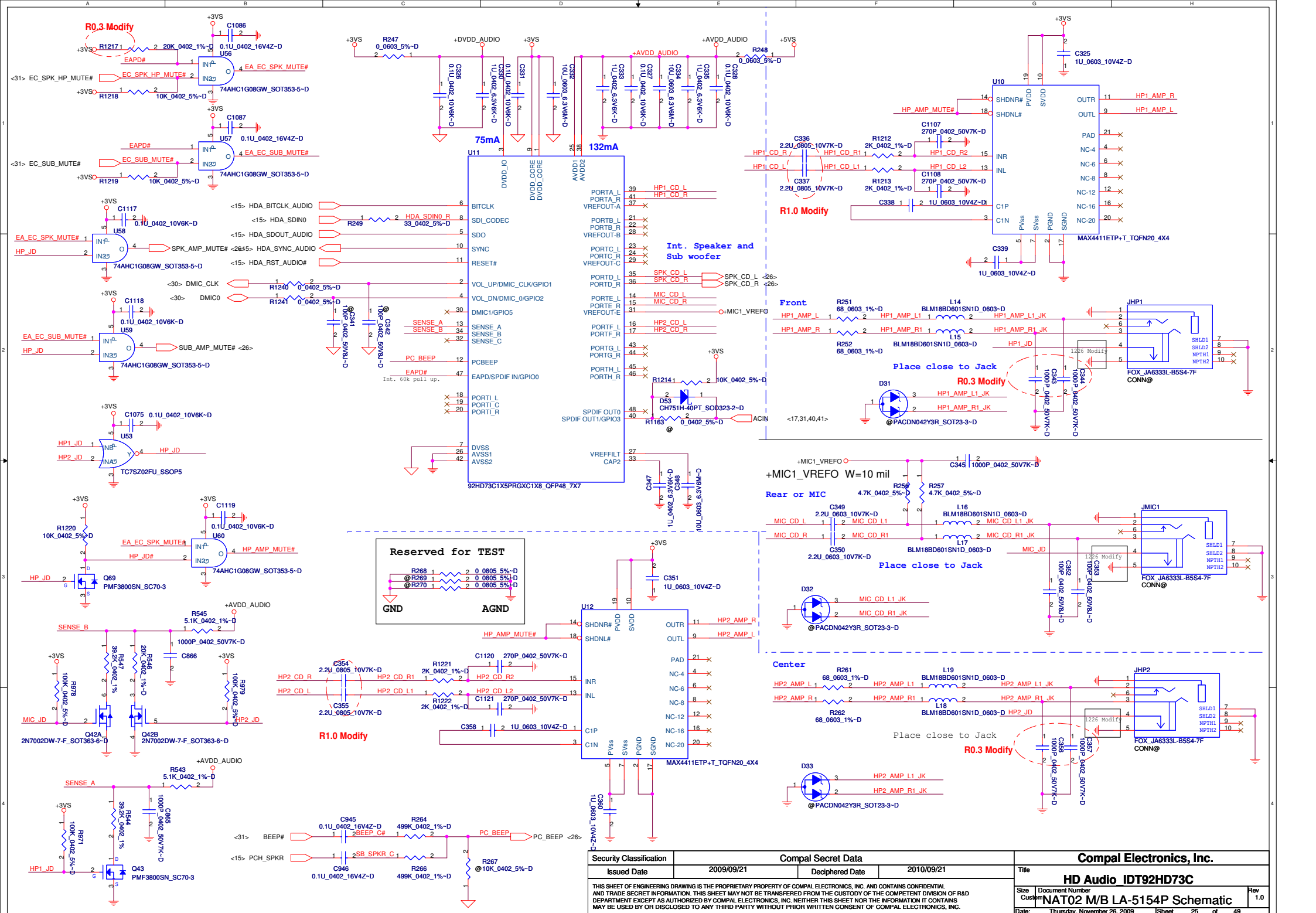

Security Classification	Compal Secret Data		
Issued Date	2009/09/21	Deciphered Date	2010/09/21

THIS SHEET OF ENGINEERING DRAWING IS THE PROPRIETARY PROPERTY OF COMPAL ELECTRONICS, INC. AND CONTAINS CONFIDENTIAL AND TRADE SECRET INFORMATION. THIS SHEET MAY NOT BE TRANSFERED FROM THE CUSTODY OF THE COMPETENT DIVISION OF R&D DEPARTMENT EXCEPT AS AUTHORIZED BY COMPAL ELECTRONICS, INC. NEITHER THIS SHEET NOR THE INFORMATION IT CONTAINS MAY BE USED BY OR DISCLOSED TO ANY THIRD PARTY WITHOUT PRIOR WRITTEN CONSENT OF COMPAL ELECTRONICS, INC.

Compal Electronics, Inc.

Title: **HD Audio_IDT92HD73C**

Size: Custom | Document Number: NAT02 M/B LA-5154P Schematic | Rev: 1.0

Date: Thursday, November 26, 2009 | Sheet 25 of 49

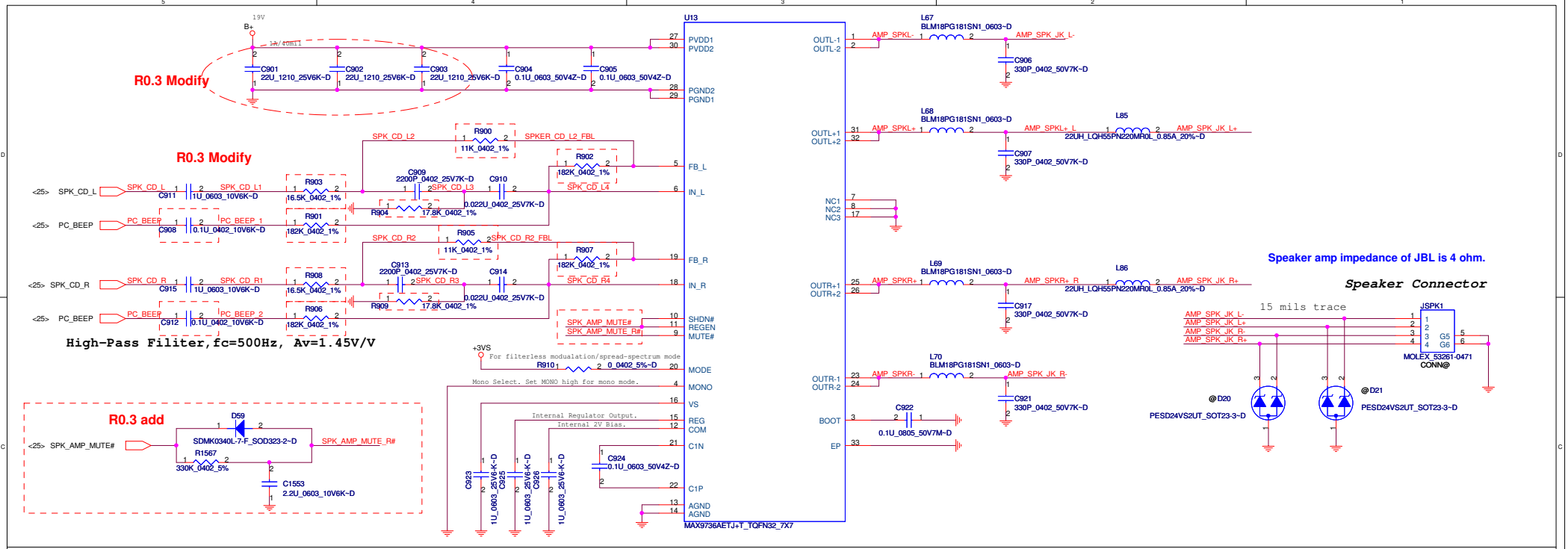

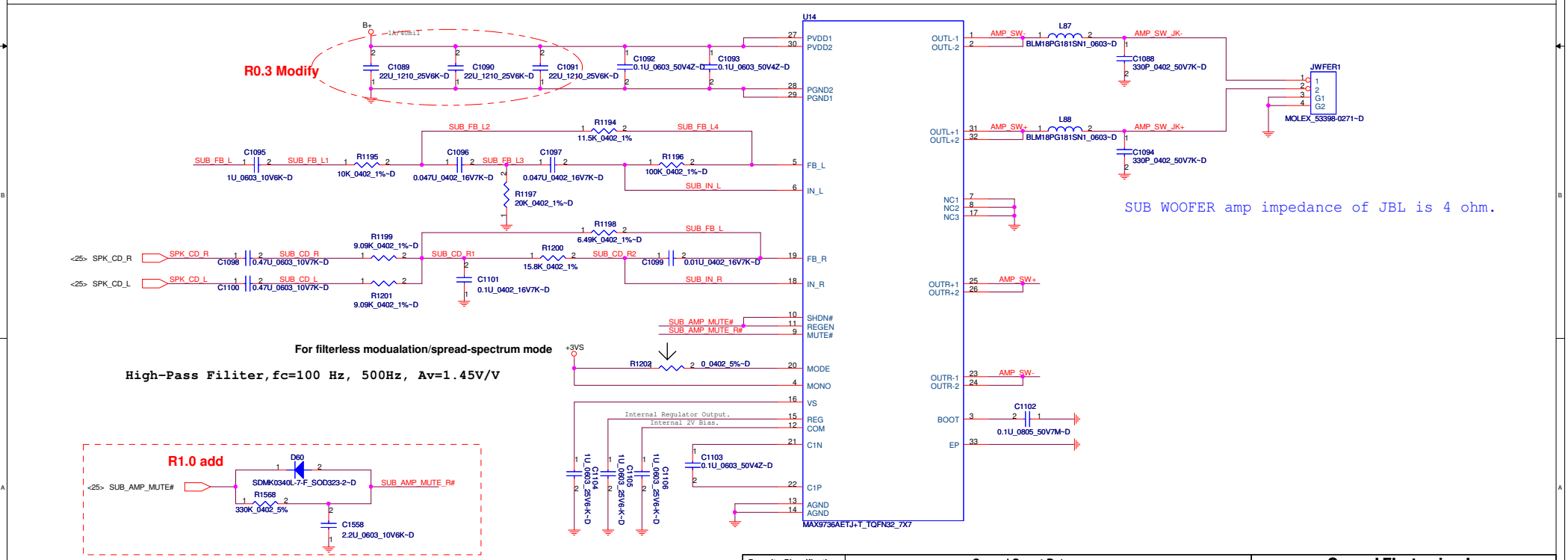

Security Classification	Compal Secret Data		
Issued Date	2009/09/21	Deciphered Date	2010/09/21

THIS SHEET OF ENGINEERING DRAWING IS THE PROPRIETARY PROPERTY OF COMPAL ELECTRONICS, INC. AND CONTAINS CONFIDENTIAL AND TRADE SECRET INFORMATION. THIS SHEET MAY NOT BE TRANSFERED FROM THE CUSTODY OF THE COMPETENT DIVISION OF R&D DEPARTMENT EXCEPT AS AUTHORIZED BY COMPAL ELECTRONICS, INC. NEITHER THIS SHEET NOR THE INFORMATION IT CONTAINS MAY BE USED BY OR DISCLOSED TO ANY THIRD PARTY WITHOUT PRIOR WRITTEN CONSENT OF COMPAL ELECTRONICS, INC.

Compal Electronics, Inc.

Title: **Sub woofer / Speaker AMP**

Size: Custom | Document Number: NAT02 M/B LA-5154P Schematic | Rev: 1.0

Date: Thursday, November 26, 2009 | Sheet 26 of 49

WWAN

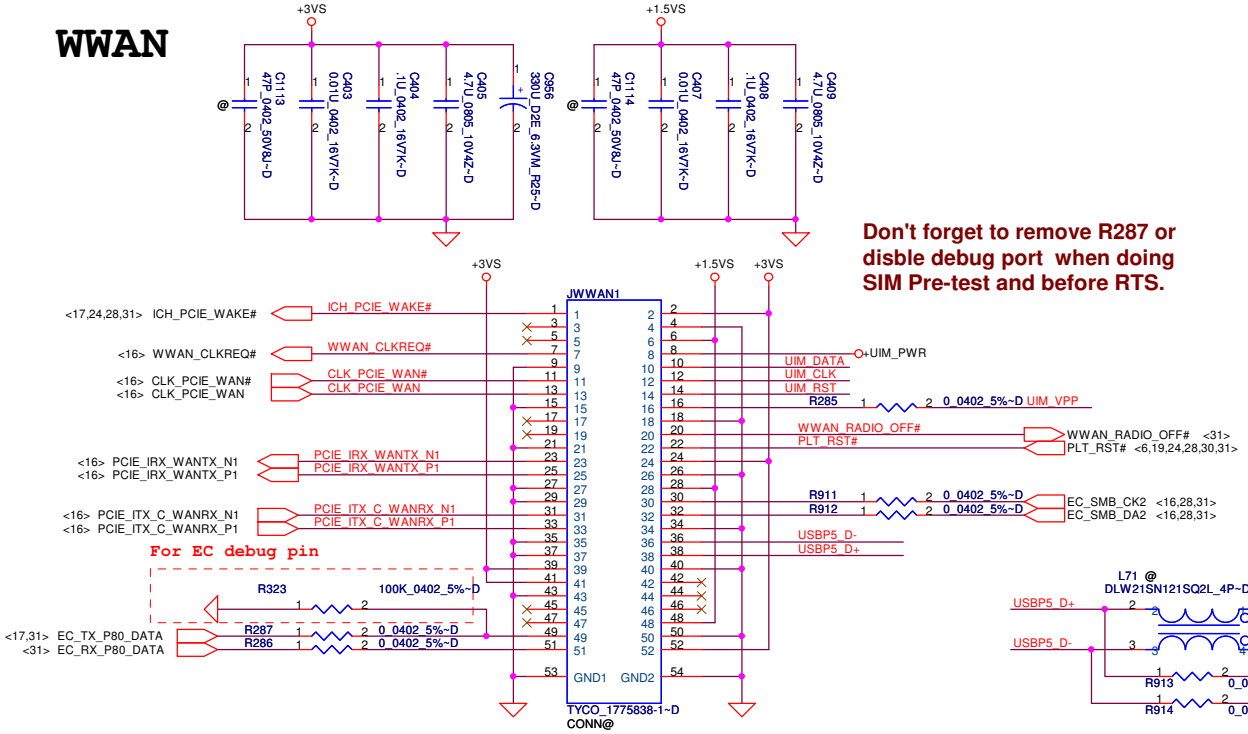

Don't forget to remove R287 or disble debug port when doing SIM Pre-test and before RTS.

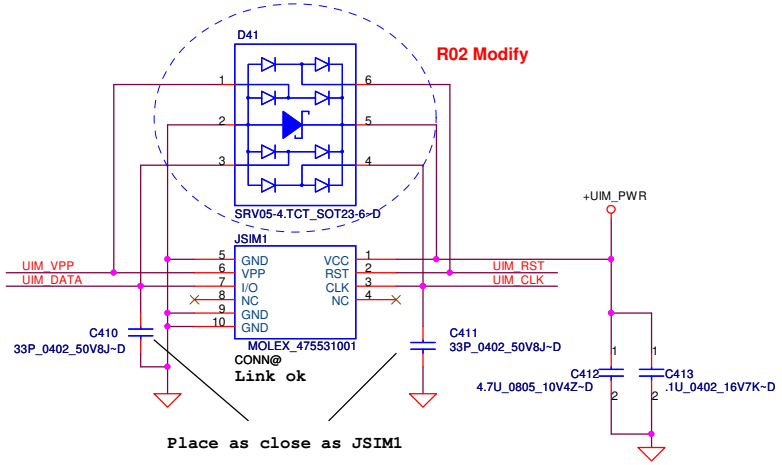

WLAN

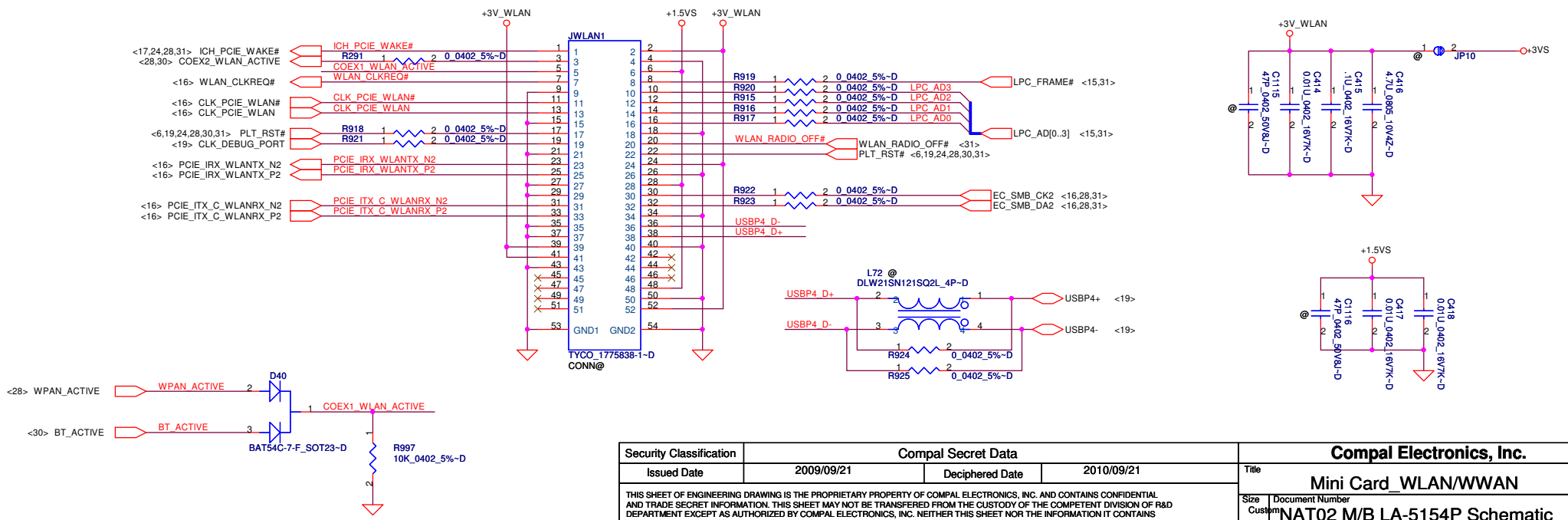

Security Classification	Compal Secret Data		
Issued Date	2009/09/21	Deciphered Date	2010/09/21

THIS SHEET OF ENGINEERING DRAWING IS THE PROPRIETARY PROPERTY OF COMPAL ELECTRONICS, INC. AND CONTAINS CONFIDENTIAL AND TRADE SECRET INFORMATION. THIS SHEET MAY NOT BE TRANSFERED FROM THE CUSTODY OF THE COMPETENT DIVISION OF R&D DEPARTMENT EXCEPT AS AUTHORIZED BY COMPAL ELECTRONICS, INC. NEITHER THIS SHEET NOR THE INFORMATION IT CONTAINS MAY BE USED BY OR DISCLOSED TO ANY THIRD PARTY WITHOUT PRIOR WRITTEN CONSENT OF COMPAL ELECTRONICS, INC.

Compal Electronics, Inc.

Title: Mini Card_WLAN/WWAN

Size: Custom | Document Number: NAT02 M/B LA-5154P Schematic | Rev: 1.0

Date: Thursday, November 26, 2009 | Sheet 27 of 49

WPAN Card

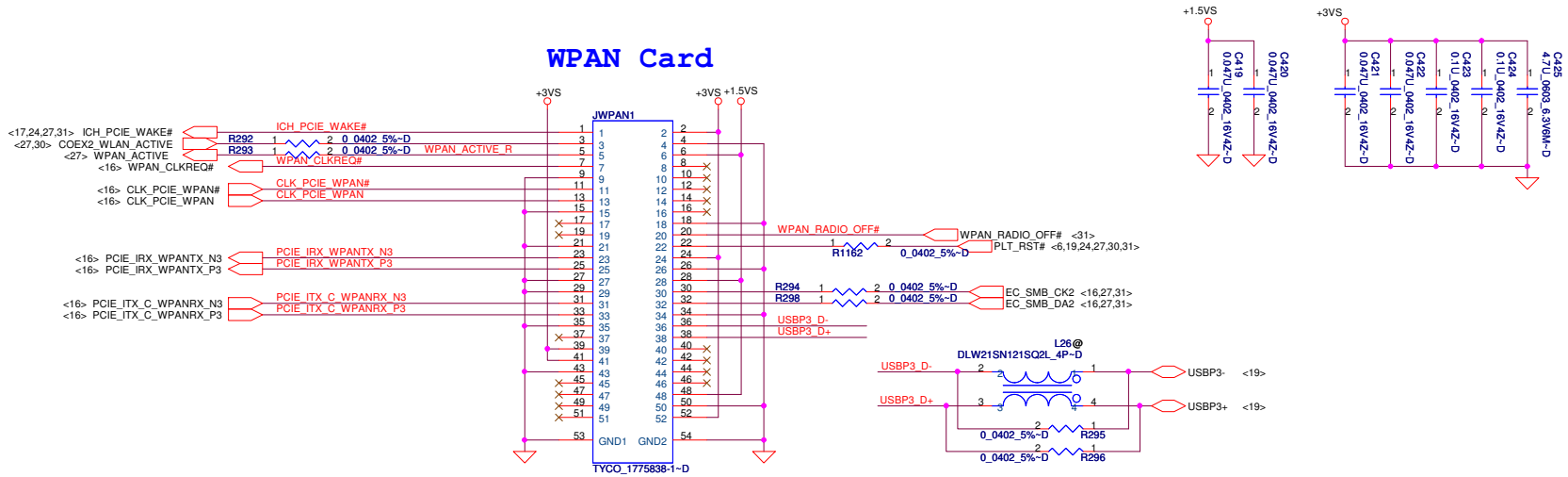

Express Card Power Switch

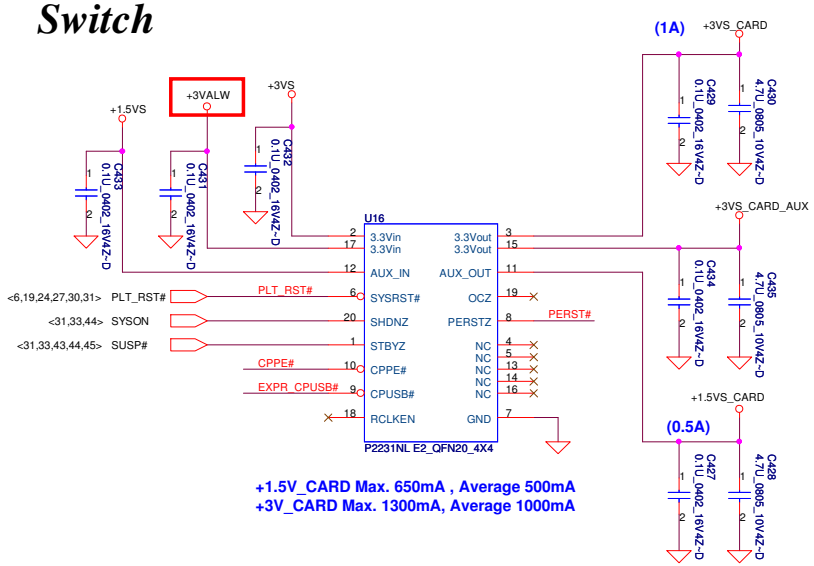

+1.5V_CARD Max. 650mA , Average 500mA
+3V_CARD Max. 1300mA, Average 1000mA

Express Card

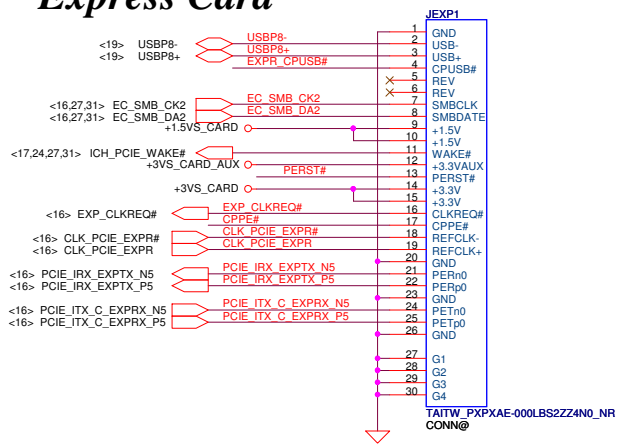

Security Classification	Compal Secret Data		
Issued Date	2009/09/21	Deciphered Date	2010/09/21

THIS SHEET OF ENGINEERING DRAWING IS THE PROPRIETARY PROPERTY OF COMPAL ELECTRONICS, INC. AND CONTAINS CONFIDENTIAL AND TRADE SECRET INFORMATION. THIS SHEET MAY NOT BE TRANSFERED FROM THE CUSTODY OF THE COMPETENT DIVISION OF R&D DEPARTMENT EXCEPT AS AUTHORIZED BY COMPAL ELECTRONICS, INC. NEITHER THIS SHEET NOR THE INFORMATION IT CONTAINS MAY BE USED BY OR DISCLOSED TO ANY THIRD PARTY WITHOUT PRIOR WRITTEN CONSENT OF COMPAL ELECTRONICS, INC.

Compal Electronics, Inc.

Title: **Mini Card_WPAN / Express**

Size: Custom | Document Number: NAT02 M/B LA-5154P Schematic | Rev: 1.0

Date: Thursday, November 26, 2009 | Sheet 28 of 49

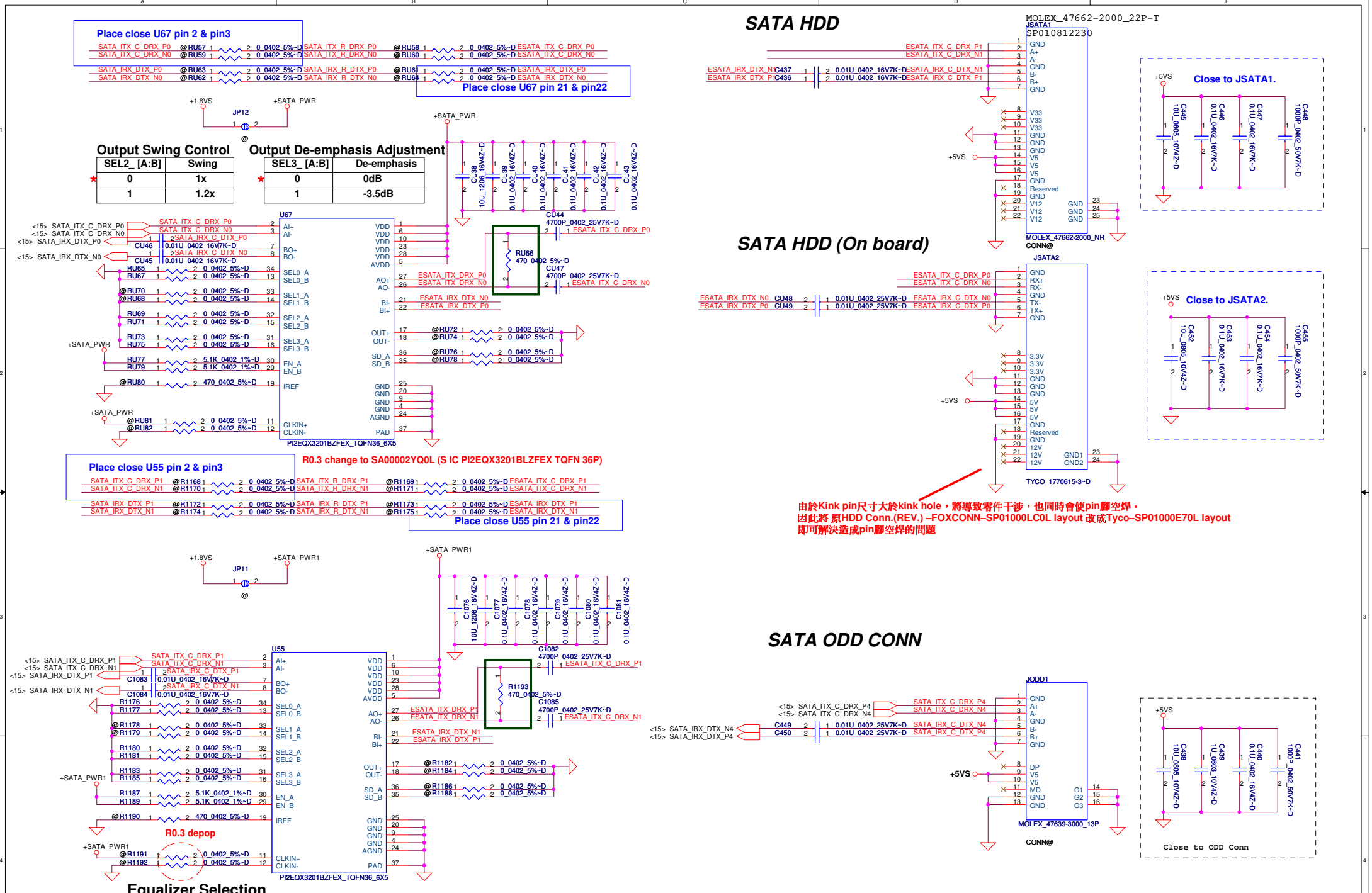

SEL2_ [A:B]	Swing
* 0	1x
1	1.2x

SEL3_ [A:B]	De-emphasis
* 0	0dB
1	-3.5dB

SEL0_ [A:B]	SEL1_ [A:B]	Compliance Channel
0	0	no equalization
* 0	1	[0:2.5dB] @ 1.6 GHz
1	0	[2.5:4.5dB] @ 1.6 GHz
1	1	[4.5:6.5dB] @ 1.6 GHz

Security Classification	Compal Secret Data		
Issued Date	2009/09/21	Deciphered Date	2010/09/21

THIS SHEET OF ENGINEERING DRAWING IS THE PROPRIETARY PROPERTY OF COMPAL ELECTRONICS, INC. AND CONTAINS CONFIDENTIAL AND TRADE SECRET INFORMATION. THIS SHEET MAY NOT BE TRANSFERED FROM THE CUSTODY OF THE COMPETENT DIVISION OF R&D DEPARTMENT EXCEPT AS AUTHORIZED BY COMPAL ELECTRONICS, INC. NEITHER THIS SHEET NOR THE INFORMATION IT CONTAINS MAY BE USED BY OR DISCLOSED TO ANY THIRD PARTY WITHOUT PRIOR WRITTEN CONSENT OF COMPAL ELECTRONICS, INC.

Compal Electronics, Inc.

Title: ODD/SATA HDD

Size: Custom | Document Number: NAT02 M/B LA-5154P Schematic | Rev: 1.0

Date: Thursday, November 26, 2009 | Sheet 29 of 49

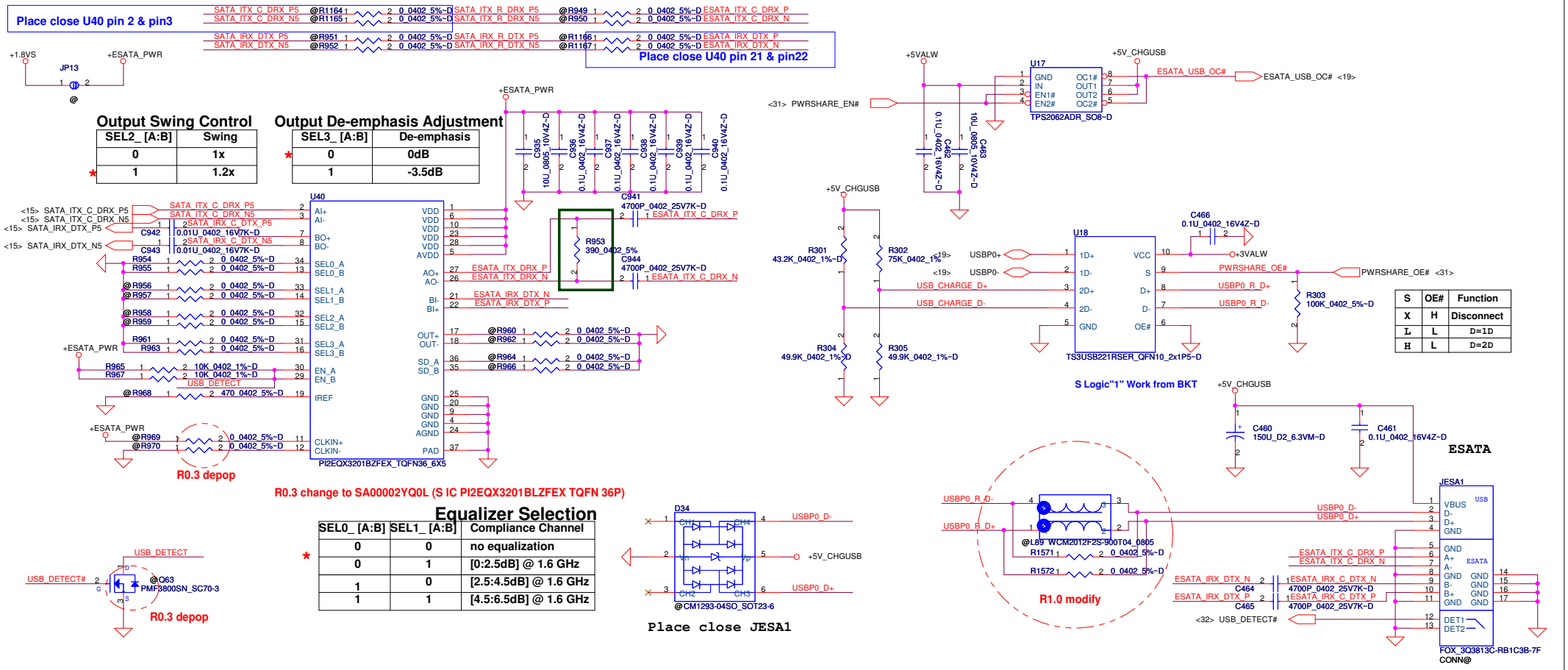

SEL2_ [A:B]	Swing
0	1x
1	1.2x

SEL3_ [A:B]	De-emphasis
0	0dB
1	-3.5dB

SEL0_ [A:B]	SEL1_ [A:B]	Compliance Channel
0	0	no equalization
0	1	[0:2.5dB] @ 1.6 GHz
1	0	[2.5:4.5dB] @ 1.6 GHz
1	1	[4.5:6.5dB] @ 1.6 GHz

S	OE#	Function
X	H	Disconnect
L	L	D=1D
H	L	D=2D

Security Classification	Compal Secret Data		
Issued Date	2009/09/21	Deciphered Date	2010/09/21

THIS SHEET OF ENGINEERING DRAWING IS THE PROPRIETARY PROPERTY OF COMPAL ELECTRONICS, INC. AND CONTAINS CONFIDENTIAL AND TRADE SECRET INFORMATION. THIS SHEET MAY NOT BE TRANSFERED FROM THE CUSTODY OF THE COMPETENT DIVISION OF R&D DEPARTMENT EXCEPT AS AUTHORIZED BY COMPAL ELECTRONICS, INC. NEITHER THIS SHEET NOR THE INFORMATION IT CONTAINS MAY BE USED BY OR DISCLOSED TO ANY THIRD PARTY WITHOUT PRIOR WRITTEN CONSENT OF COMPAL ELECTRONICS, INC.

Compal Electronics, Inc.

Title: **USB/BlueTooth/Camera/ESATA**

Size: Custom | Document Number: NAT02 M/B LA-5154P Schematic | Rev: 1.0

Date: Thursday, November 26, 2009 | Sheet 30 of 49

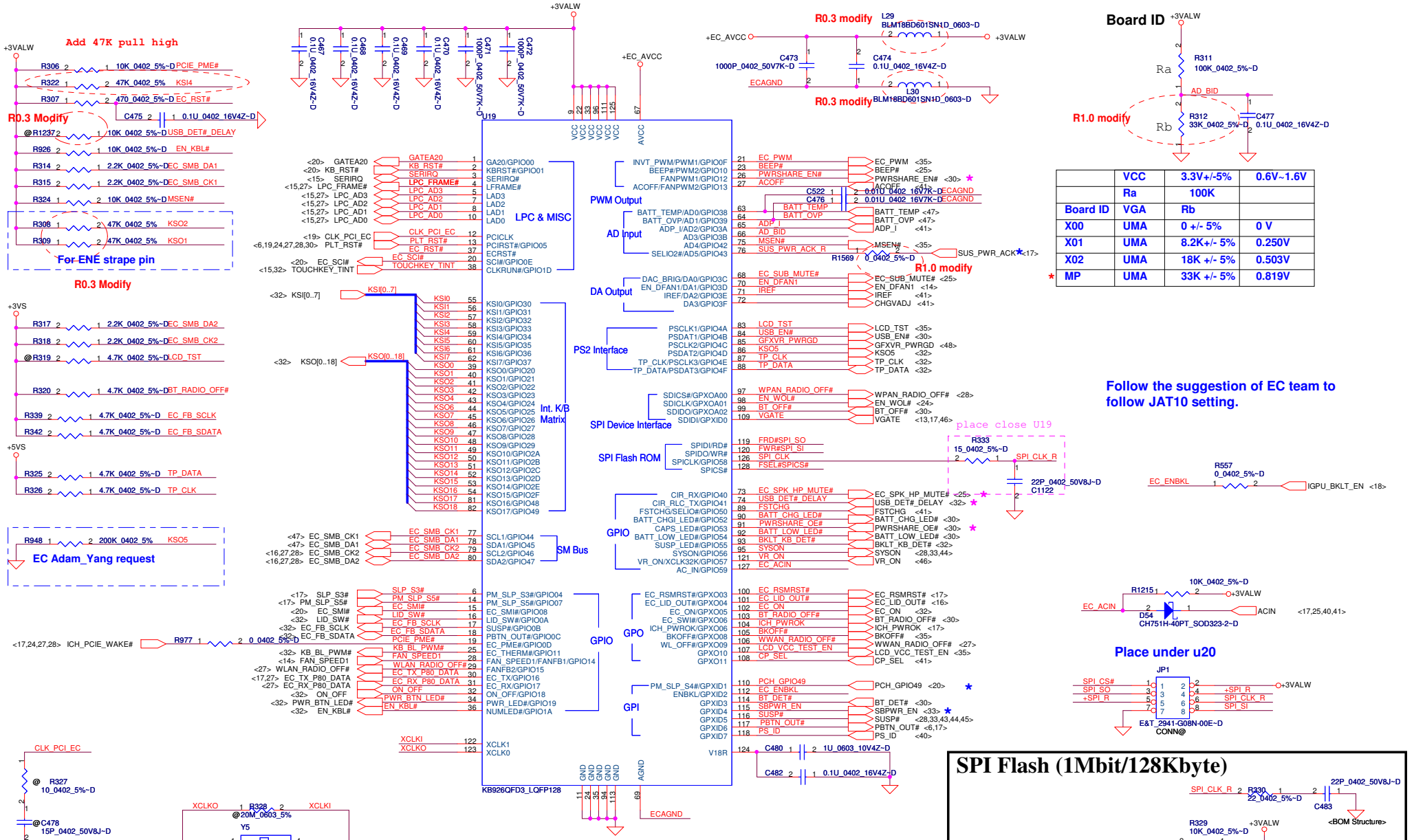

	VCC	3.3V+/-5%	0.6V~1.6V
	Ra	100K	
Board ID	VGA	Rb	
X00	UMA	0 +/- 5%	0 V
X01	UMA	8.2K+/- 5%	0.250V
X02	UMA	18K +/- 5%	0.503V
* MP	UMA	33K +/- 5%	0.819V

SPI Flash (1Mbit/128Kbyte)

R0.3 modify

Security Classification	Compal Secret Data		
Issued Date	2009/09/21	Deciphered Date	2010/09/21

THIS SHEET OF ENGINEERING DRAWING IS THE PROPRIETARY PROPERTY OF COMPAL ELECTRONICS, INC. AND CONTAINS CONFIDENTIAL AND TRADE SECRET INFORMATION. THIS SHEET MAY NOT BE TRANSFERED FROM THE CUSTODY OF THE COMPETENT DIVISION OF R&D DEPARTMENT EXCEPT AS AUTHORIZED BY COMPAL ELECTRONICS, INC. NEITHER THIS SHEET NOR THE INFORMATION IT CONTAINS MAY BE USED BY OR DISCLOSED TO ANY THIRD PARTY WITHOUT PRIOR WRITTEN CONSENT OF COMPAL ELECTRONICS, INC.

Compal Electronics, Inc.

Title: EC_KB926/BIOS/Reed SW

Size: Custom | Document Number: NAT02 M/B LA-5154P Schematic | Rev: 1.0

Date: Thursday, November 26, 2009 | Sheet 31 of 49

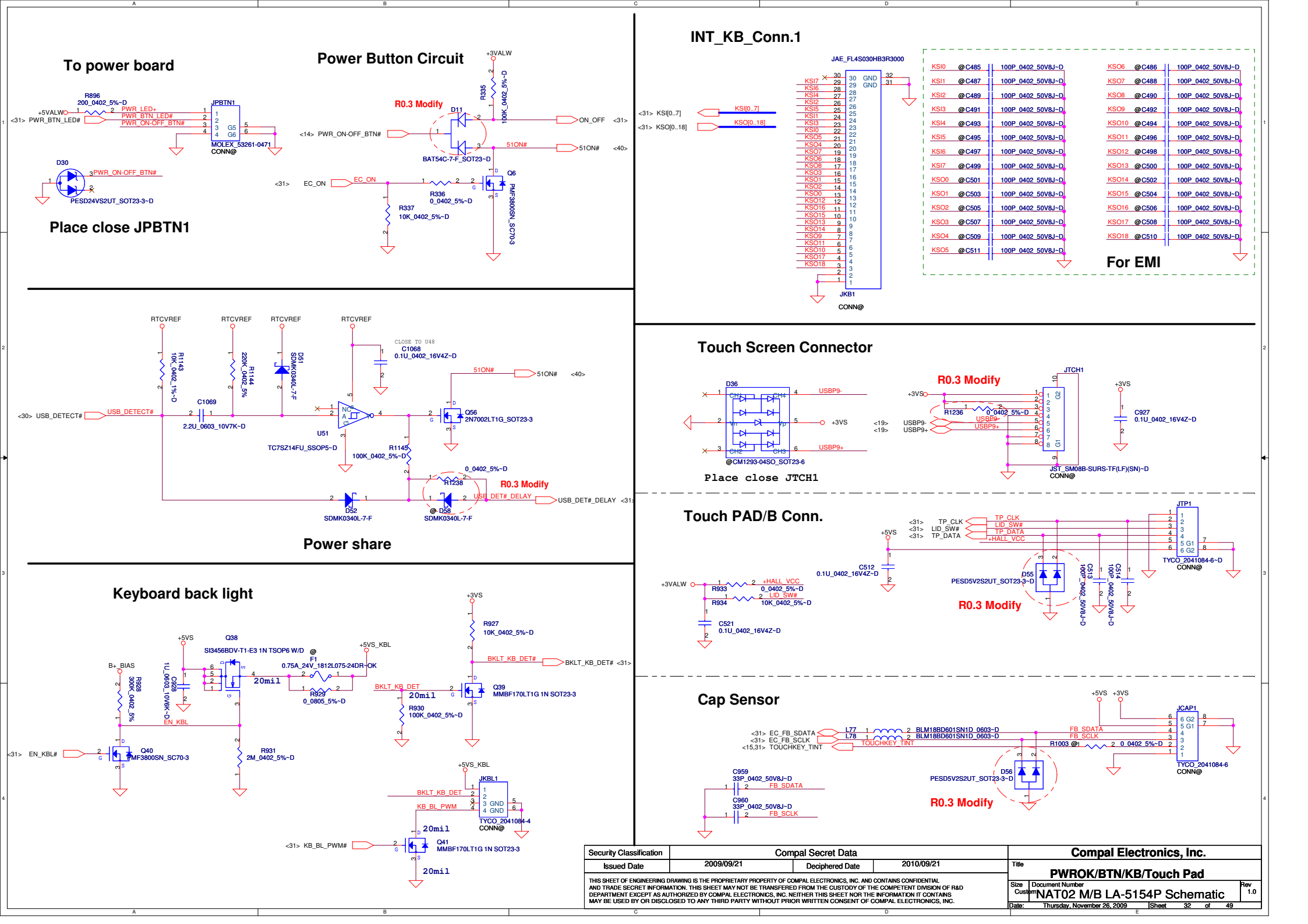

Security Classification	Compal Secret Data		
Issued Date	2009/09/21	Deciphered Date	2010/09/21

THIS SHEET OF ENGINEERING DRAWING IS THE PROPRIETARY PROPERTY OF COMPAL ELECTRONICS, INC. AND CONTAINS CONFIDENTIAL AND TRADE SECRET INFORMATION. THIS SHEET MAY NOT BE TRANSFERED FROM THE CUSTODY OF THE COMPETENT DIVISION OF R&D DEPARTMENT EXCEPT AS AUTHORIZED BY COMPAL ELECTRONICS, INC. NEITHER THIS SHEET NOR THE INFORMATION IT CONTAINS MAY BE USED BY OR DISCLOSED TO ANY THIRD PARTY WITHOUT PRIOR WRITTEN CONSENT OF COMPAL ELECTRONICS, INC.

Compal Electronics, Inc.

Title: **PWROK/BTN/KB/Touch Pad**

Size: Custom | Document Number: NAT02 M/B LA-5154P Schematic | Rev: 1.0

Date: Thursday, November 26, 2009 | Sheet 32 of 49

+3VALW to +3VS Transfer

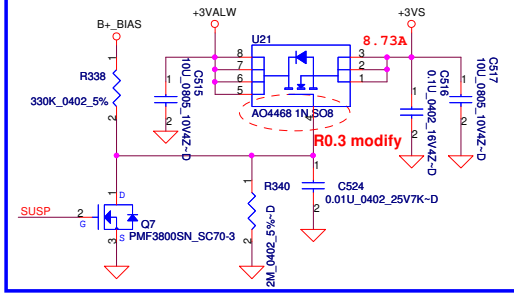

+3VALW to +3V Transfer (PCH AUX Power)

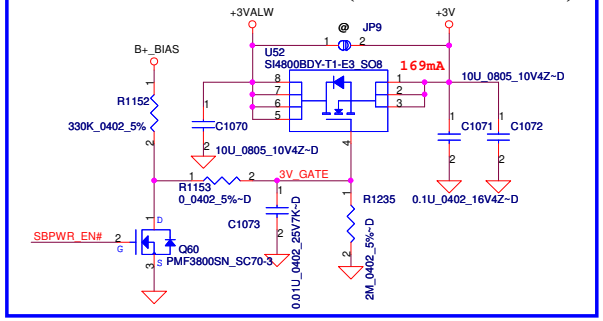

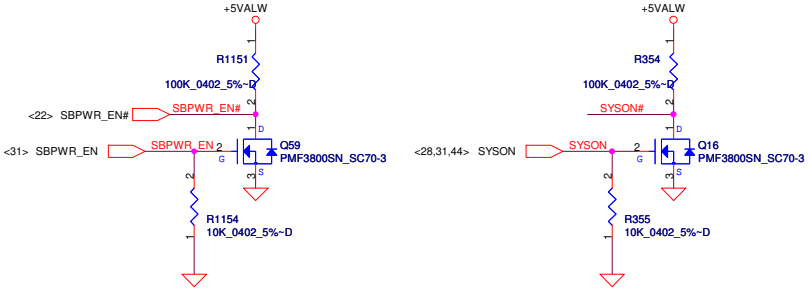

+5VALW to +5VS Transfer

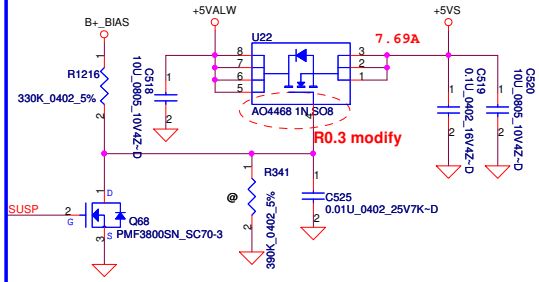

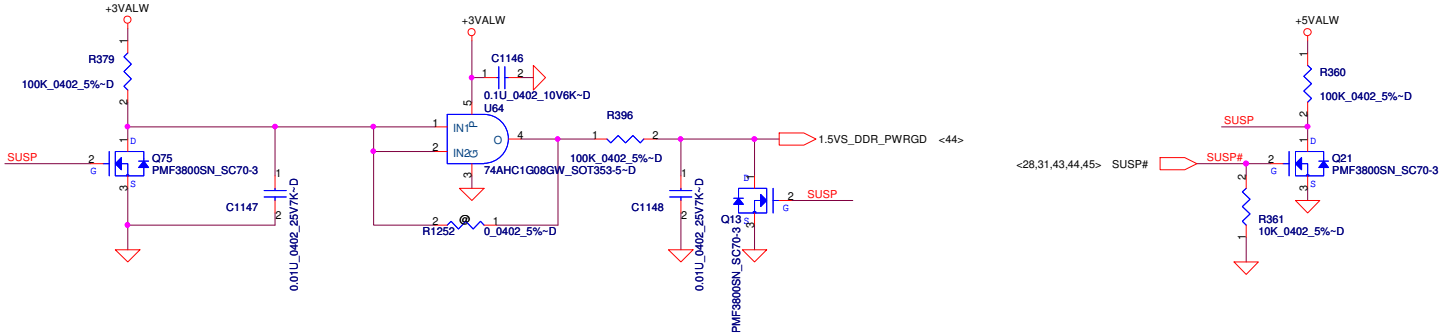

+1.5V to +1.5VS Transfer

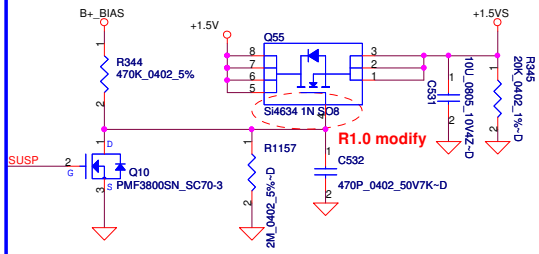

+1.5V to +1.5VS_DDR Transfer

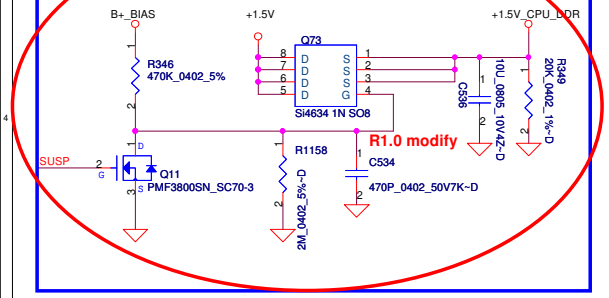

Discharge Circuit

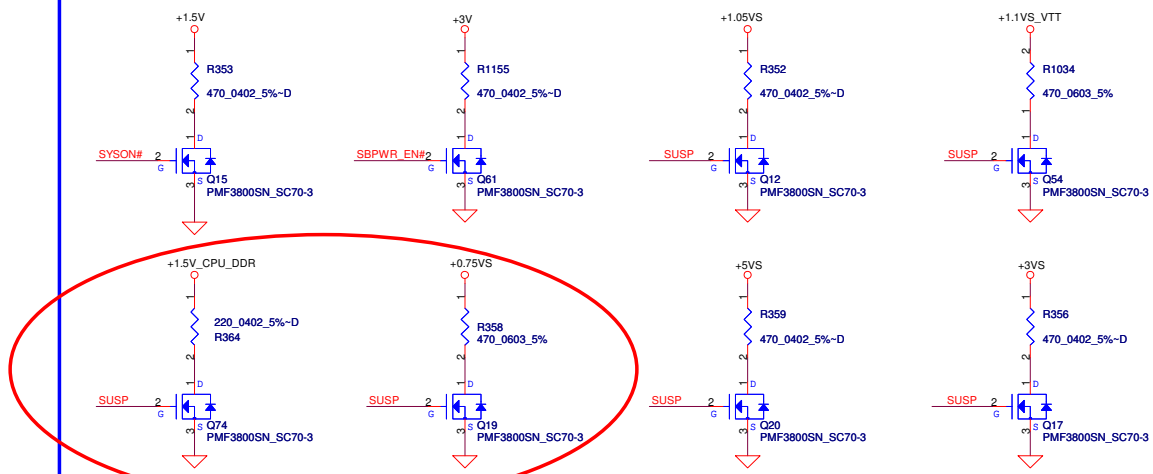

Security Classification	Compal Secret Data		
Issued Date	2009/09/21	Deciphered Date	2010/09/21

THIS SHEET OF ENGINEERING DRAWING IS THE PROPRIETARY PROPERTY OF COMPAL ELECTRONICS, INC. AND CONTAINS CONFIDENTIAL AND TRADE SECRET INFORMATION. THIS SHEET MAY NOT BE TRANSFERED FROM THE CUSTODY OF THE COMPETENT DIVISION OF R&D DEPARTMENT EXCEPT AS AUTHORIZED BY COMPAL ELECTRONICS, INC. NEITHER THIS SHEET NOR THE INFORMATION IT CONTAINS MAY BE USED BY OR DISCLOSED TO ANY THIRD PARTY WITHOUT PRIOR WRITTEN CONSENT OF COMPAL ELECTRONICS, INC.

Compal Electronics, Inc.

Title: DC/DC Interface

Size: Custom | Document Number: NAT02 M/B LA-5154P Schematic | Rev: 1.0

Date: Thursday, November 26, 2009 | Sheet 33 of 49

Security Classification	Compal Secret Data		
Issued Date	2009/09/21	Deciphered Date	2010/09/21

THIS SHEET OF ENGINEERING DRAWING IS THE PROPRIETARY PROPERTY OF COMPAL ELECTRONICS, INC. AND CONTAINS CONFIDENTIAL AND TRADE SECRET INFORMATION. THIS SHEET MAY NOT BE TRANSFERED FROM THE CUSTODY OF THE COMPETENT DIVISION OF R&D DEPARTMENT EXCEPT AS AUTHORIZED BY COMPAL ELECTRONICS, INC. NEITHER THIS SHEET NOR THE INFORMATION IT CONTAINS MAY BE USED BY OR DISCLOSED TO ANY THIRD PARTY WITHOUT PRIOR WRITTEN CONSENT OF COMPAL ELECTRONICS, INC.

Compal Electronics, Inc.

Title: **Screws**

Size: Custom | Document Number: NAT02 M/B LA-5154P Schematic | Rev: 1.0

Date: Thursday, November 26, 2009 | Sheet 34 of 49

CRT

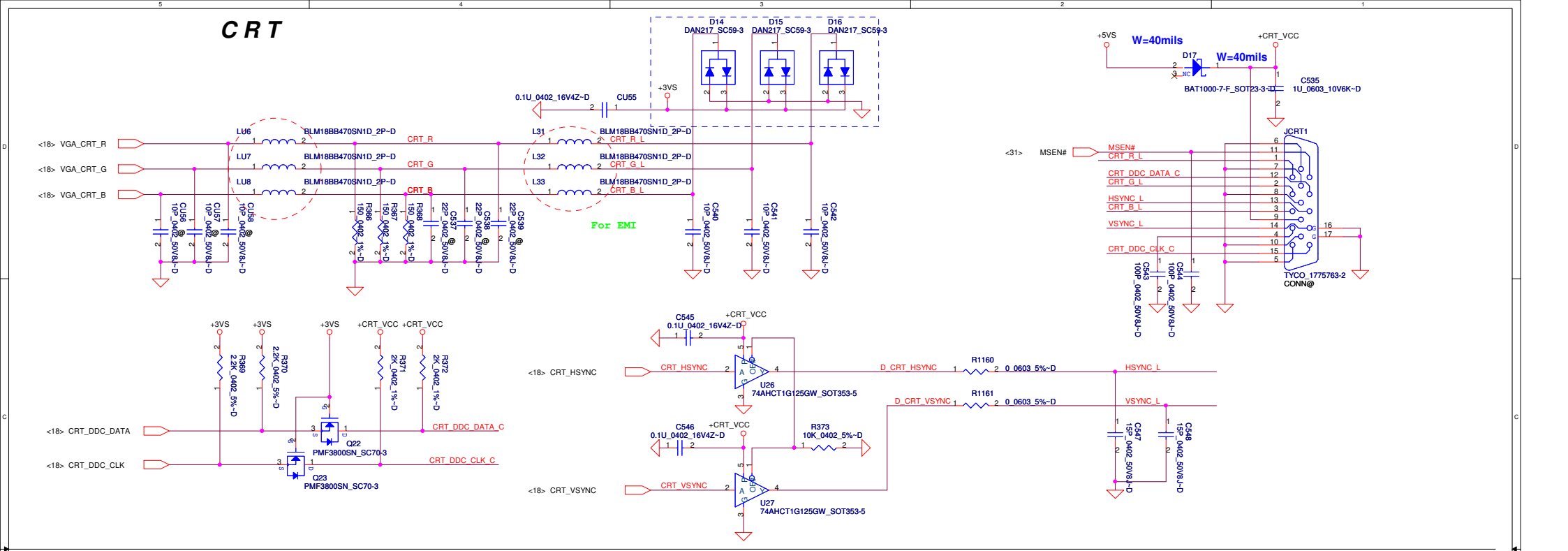

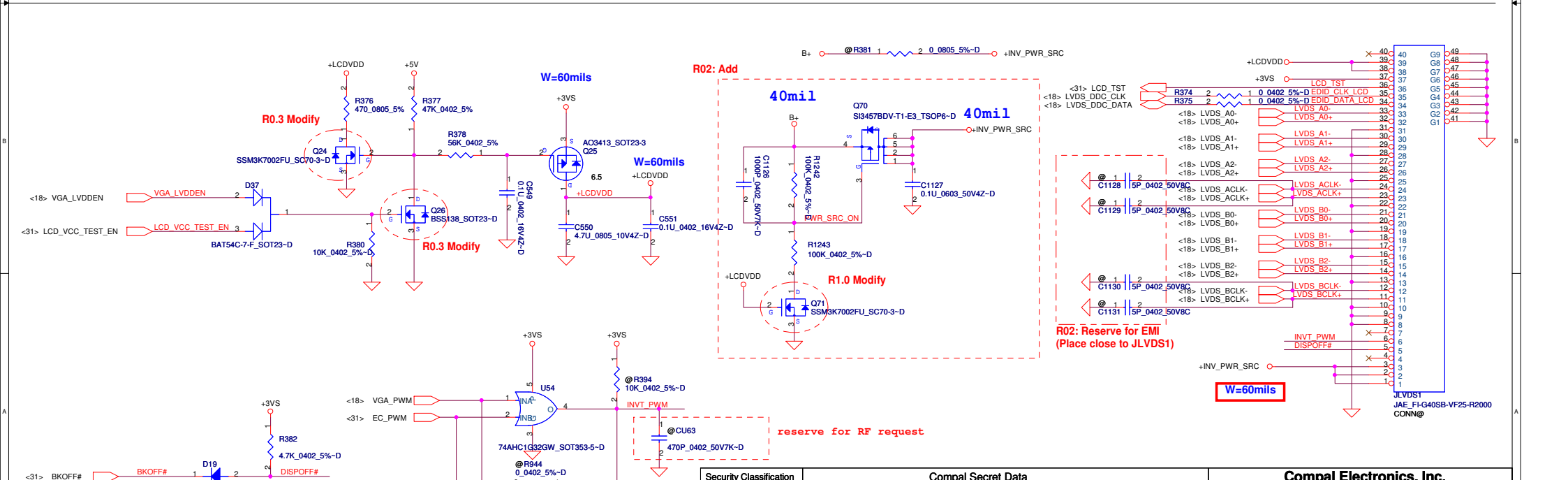

Security Classification	Compal Secret Data		
Issued Date	2009/09/21	Deciphered Date	2010/09/21

THIS SHEET OF ENGINEERING DRAWING IS THE PROPRIETARY PROPERTY OF COMPAL ELECTRONICS, INC. AND CONTAINS CONFIDENTIAL AND TRADE SECRET INFORMATION. THIS SHEET MAY NOT BE TRANSFERED FROM THE CUSTODY OF THE COMPETENT DIVISION OF R&D DEPARTMENT EXCEPT AS AUTHORIZED BY COMPAL ELECTRONICS, INC. NEITHER THIS SHEET NOR THE INFORMATION IT CONTAINS MAY BE USED BY OR DISCLOSED TO ANY THIRD PARTY WITHOUT PRIOR WRITTEN CONSENT OF COMPAL ELECTRONICS, INC.

Compal Electronics, Inc.

Title: **VGA / LVDS**

Size: Custom | Document Number: NAT02 M/B LA-5154P Schematic | Rev: 1.0

Date: Thursday, November 26, 2009 | Sheet 35 of 49

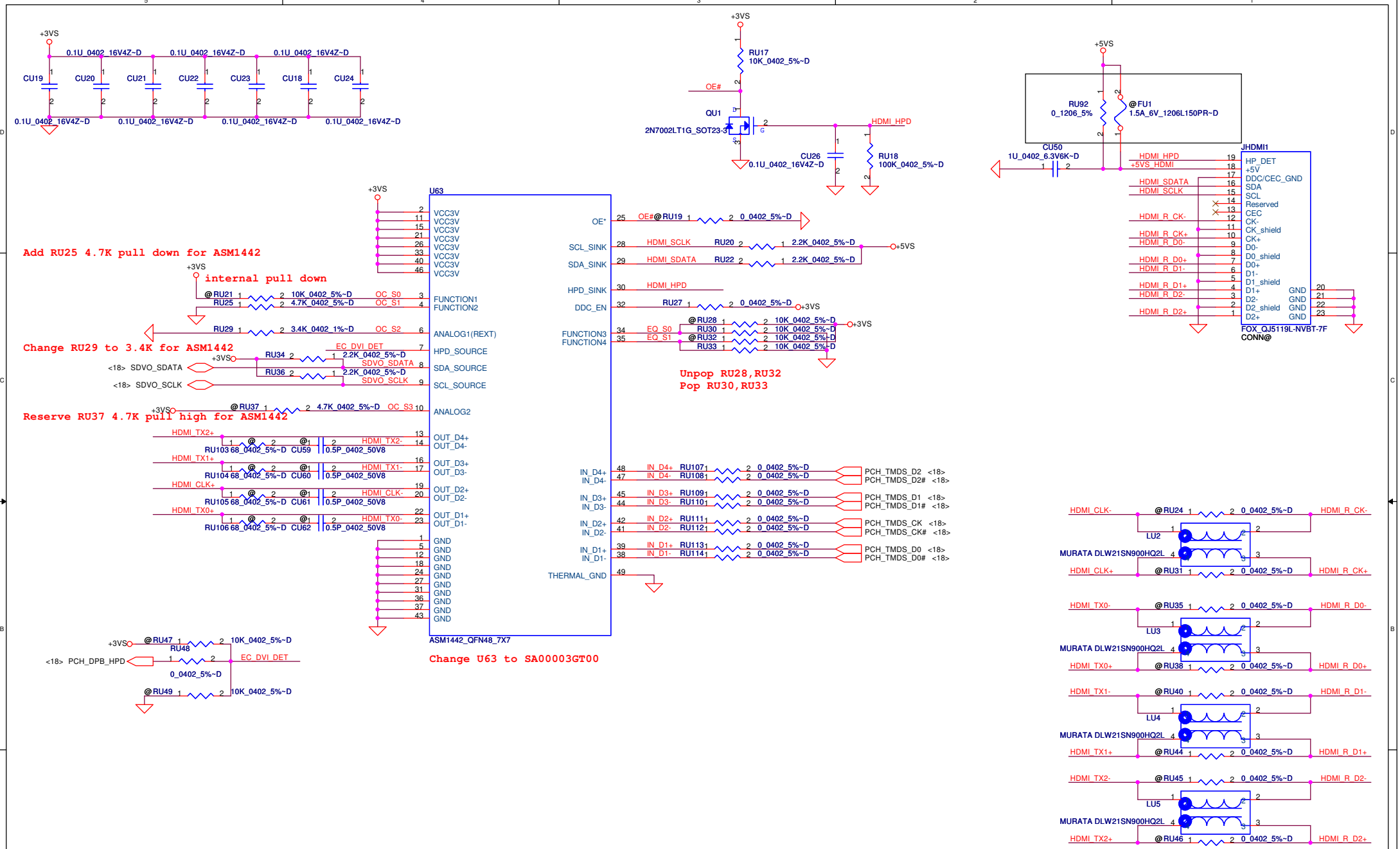

Security Classification	Compal Secret Data		
Issued Date	2009/09/21	Deciphered Date	2010/09/21

THIS SHEET OF ENGINEERING DRAWING IS THE PROPRIETARY PROPERTY OF COMPAL ELECTRONICS, INC. AND CONTAINS CONFIDENTIAL AND TRADE SECRET INFORMATION. THIS SHEET MAY NOT BE TRANSFERED FROM THE CUSTODY OF THE COMPETENT DIVISION OF R&D DEPARTMENT EXCEPT AS AUTHORIZED BY COMPAL ELECTRONICS, INC. NEITHER THIS SHEET NOR THE INFORMATION IT CONTAINS MAY BE USED BY OR DISCLOSED TO ANY THIRD PARTY WITHOUT PRIOR WRITTEN CONSENT OF COMPAL ELECTRONICS, INC.

Compal Electronics, Inc.

Title: **HDMI**

Size: Custom | Document Number: NAT02 M/B LA-5154P Schematic | Rev: 1.0

Date: Thursday, November 26, 2009 | Sheet 36 of 49

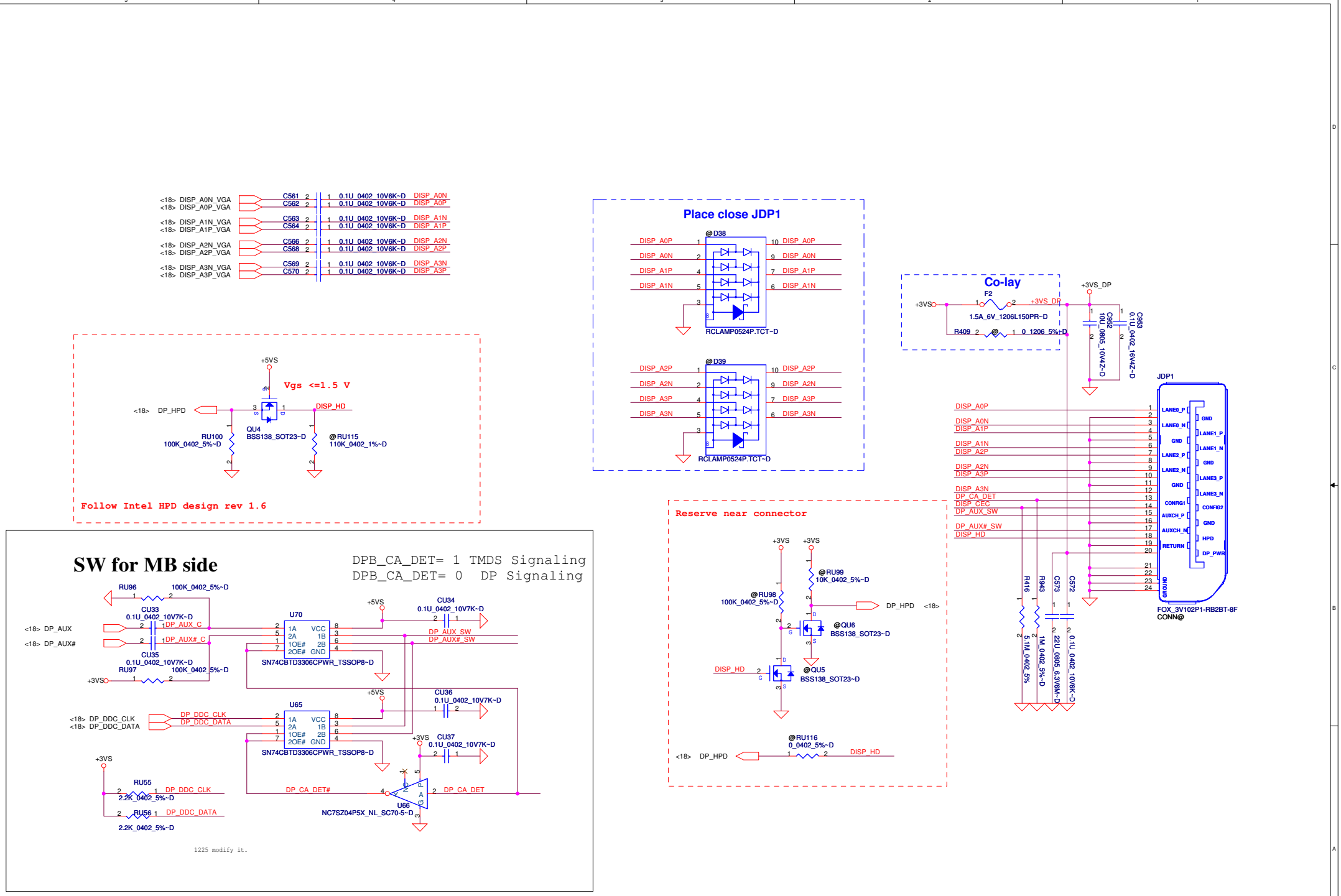

Security Classification	Compal Secret Data		
Issued Date	2009/09/21	Deciphered Date	2010/09/21

THIS SHEET OF ENGINEERING DRAWING IS THE PROPRIETARY PROPERTY OF COMPAL ELECTRONICS, INC. AND CONTAINS CONFIDENTIAL AND TRADE SECRET INFORMATION. THIS SHEET MAY NOT BE TRANSFERED FROM THE CUSTODY OF THE COMPETENT DIVISION OF R&D DEPARTMENT EXCEPT AS AUTHORIZED BY COMPAL ELECTRONICS, INC. NEITHER THIS SHEET NOR THE INFORMATION IT CONTAINS MAY BE USED BY OR DISCLOSED TO ANY THIRD PARTY WITHOUT PRIOR WRITTEN CONSENT OF COMPAL ELECTRONICS, INC.

Compal Electronics, Inc.

Title: **Display Port**

Size: Custom | Document Number: NAT02 M/B LA-5154P Schematic | Rev: 1.0

Date: Thursday, November 26, 2009 | Sheet 37 of 49

Version Change List (P. I. R. List) Page 1

Item	Page#	Title	Date	Request Owner	Issue Description	Solution Description	Rev.
01	08	PROCESSOR (4/6) PWR,Bypass	2009/07/22	Compal	Design change for IMVP6.5 current gain	R343 un-pop,R1072 pop,R1074 pop,R1073 unpop,R1075 pop,R1076 un-pop	Rev02 (X01)
02	16	PCH (2/9) PCIE, SMBUS, CLK	2009/08/10	Compal	XTAL25_IN should be pulled to GND using a 0Ω resistor.	Pop C1027 with a 0 ohm resister	Rev02 (X01)
03	06	+1.5V and resert	2009/08/10	Compal	Reduce S3 state Power	Add U63,Q36,R290,R310,R1103,R1136,C1142	Rev02 (X01)
04	09	Separate +1.5V power	2009/08/10	Compal	Reduce S3 state Power	Add PJP12,PJP13,PJP14,C1033,C1143,C1144,C1145	Rev02 (X01)
05	11	VrefDQ	2009/08/10	Compal	VrefDQ should be Maintained within SPEC during S3	Add Q37,R313	Rev02 (X01)
06	12	VrefDQ	2009/08/10	Compal	VrefDQ should be Maintained within SPEC during S3	Add Q44,R321	Rev02 (X01)
07	20	DDR_RST_GATE	2009/08/10	Compal	DDR_RST_GATE from GPIO46	Add GPIO46	Rev02 (X01)
08	33	VDDQ	2009/08/10	Compal	Processor VDDQ should be turned off in S3	Add Q73,Q11,R346,R349,R1158,C534,C536	Rev02 (X01)
09	15	GPIO1D	2009/08/18	Compal	ADD EC GPIO1D to PCH GPIO33	Add GPIO33	Rev02 (X01)
10	26	Sub woofer / Speaker AMP	2009/08/25	Compal	Reserve Subwoofer delay circuit for mute	Reserve D60, R1568, C1558	Rev02 (X01)
11	24,31		2009/08/25	Compal	Follow crystal vendor's recommend	C318,C319,C479,C481 BOM change to SE071330J8L (S CER CAP 33P 50V +-5% NPO 0402)	Rev02 (X01)
12	6	PROCESSOR (2/6) CLK,JTAG	2009/08/25	Compal	Intel S3 solution disable	POP R1054,R1055,R1121; Depop Q36,R290,R1103	Rev02 (X01)
13	11,12		2009/08/25	Compal	Intel S3 solution disable	Depop Q37,Q44,R56	Rev02 (X01)
14	33	DC/DC Interface	2009/08/25	Compal	Intel S3 solution disable	Depop Q73 Q73 BOM change to SB000001Y8L R358 BOM change to SD013470080 (S RES 1/10W 470 +-5% 0603)	Rev02 (X01)
15	35	VGA / LVDS	2009/08/25	Compal	to improve +LCDVDD voltage quality.	Pop C550	Rev02 (X01)
16	31	EC_KB926/BIOS/Reed SW	2009/08/25	Compal	Board ID change	R312 BOM change to 8.2K	Rev02 (X01)
17	31	EC_KB926/BIOS/Reed SW	2009/08/25	Compal	Reserve a 0ohm resister on SUS_PWR_ACK from PCH to EC	Reserve R1569 on SUS_PWR_ACK	Rev02 (X01)
18	35		2009/09/01	Compal	In common with MV	Q71 BOM change to SB00000960L	Rev02 (X01)
19	20		2009/09/21	Compal	S3 POWER Reduction update from Intel	Reserve C1559 on DDR_RST_GATE	Rev03 (X02)
20	30		2009/09/21	Compal	Reserve common choke on USB0	Reserve L89,R1571,R1572	Rev03 (X02)

Version Change List (P. I. R. List) Page 1

Item	Page#	Title	Date	Request Owner	Issue Description	Solution Description	Rev.
01	30	ESATA	2009/09/21	Compal	Add ESATA re-driver	Unpop R1164,R1165,R1166,R1167,R949,R950,R951,R952 pop JP13,C941,C944,C942,C943	Rev03 (X02)
02	33		2009/09/21	Compal		Q55,Q73 BOM change to SB00000DA0L	Rev03 (X02)
03	8		2009/09/21	Compal	BOM reason	C1009,C1010 BOM change to SGA00002U1L	Rev03 (X02)
04	25	HD Audio_IDT92HD73C	2009/09/21	Compal		BOM change for C336,C337,C354,C355	Rev03 (X02)
05	26	Sub woofer/Speaker AMP	2009/09/21	Compal	implement Subwoofer delay circuit for mute	Pop D60,C1558 R1568 change to 330K	Rev03 (X02)
06	37	Display Port	2009/09/21	Compal	Follow Intel HPD design	remove RU98,RU99;add RU115; change QU4 to SB50138008L	Rev03 (X02)
07	22	PCH (8/9) PWR	2009/09/21	Compal	Follow Intel design	Add LU9,CU64,CU65,CU66	Rev03 (X02)
08	11,12	DDRIII SO-DIMM	2009/10/08	Compal	Add M3 solution	Pop R166,R178	Rev03 (X02)
09	31	EC	2009/10/12	Compal	For ENE issue	Add R322 47K ohm pull high	Rev03 (X02)
10	17	PCH	2009/10/15	Compal	Bom reason	Change U2 SA007080B90 to SA007080100	Rev03 (X02)
11	19	PCH	2009/10/16	Compal	Design follow NAT01	Change R1139 SD02810038L to SE000000K8L	Rev03 (X02)
12	31	EC	2009/10/22	Compal	Change Board ID	Change R312 SD02882018L to SD02818028L	Rev03 (X02)
13	32	Touch Screen	2009/11/02	Compal	Add for Touch Screen issue	Add R1236	Rev03 (X02)
14	36	HDMI	2009/11/24	Compal	For HDMI Deep color mode	Unpop RU28,RU32 , Pop RU30,RU33	Rev10 (A00)
15	30	Camera	2009/11/02	Compal	improve 888MHZ noise	Add C458,C459	Rev10 (A00)
16	27	WLAN	2009/11/05	Compal	for EC debug pin	Add R323 100K pull down	Rev10 (A00)
17	9	PWR	2009/11/05	Compal	Intel suggest to reduce GFX voltage overshoot	Change RU93 to 470ohm	Rev10 (A00)
18	26	Sub woofer/Speaker Amp	2009/11/16	Compal	Follow NAT01 design	Change C922 & C1102 to 0.1uF	Rev10 (A00)
19	31	EC	2009/11/19	Compal	Change Board ID	Change R312 SD02818028L to SD02833028L	Rev10 (A00)
20	36	HDMI	2009/11/24	Compal	Change HDMI level shift	Change U63 to SA00003GT00	Rev10 (A00)
21	36	HDMI	2009/11/24	Compal	For HDMI Deep color mode	Add RU25 4.7K pull down for ASM1442	Rev10 (A00)
22	36	HDMI	2009/11/24	Compal	For HDMI Deep color mode	Reserve RU37 4.7K pull high for ASM1442	Rev10 (A00)
23	36	HDMI	2009/11/24	Compal	For HDMI Level shift ASM1442	Change RU29 to 3.4K for ASM1442	Rev10 (A00)
24							
25							

Security Classification	Compal Secret Data		
Issued Date	2009/09/21	Deciphered Date	2010/09/21

THIS SHEET OF ENGINEERING DRAWING IS THE PROPRIETARY PROPERTY OF COMPAL ELECTRONICS, INC. AND CONTAINS CONFIDENTIAL AND TRADE SECRET INFORMATION. THIS SHEET MAY NOT BE TRANSFERED FROM THE CUSTODY OF THE COMPETENT DIVISION OF R&D DEPARTMENT EXCEPT AS AUTHORIZED BY COMPAL ELECTRONICS, INC. NEITHER THIS SHEET NOR THE INFORMATION IT CONTAINS MAY BE USED BY OR DISCLOSED TO ANY THIRD PARTY WITHOUT PRIOR WRITTEN CONSENT OF COMPAL ELECTRONICS, INC.

Compal Electronics, Inc.

Title: HW PIR

Size: Custom | Document Number: NAT02 M/B LA-5154P Schematic | Rev: 1.0

Date: Thursday, November 26, 2009 | Sheet 39 of 49

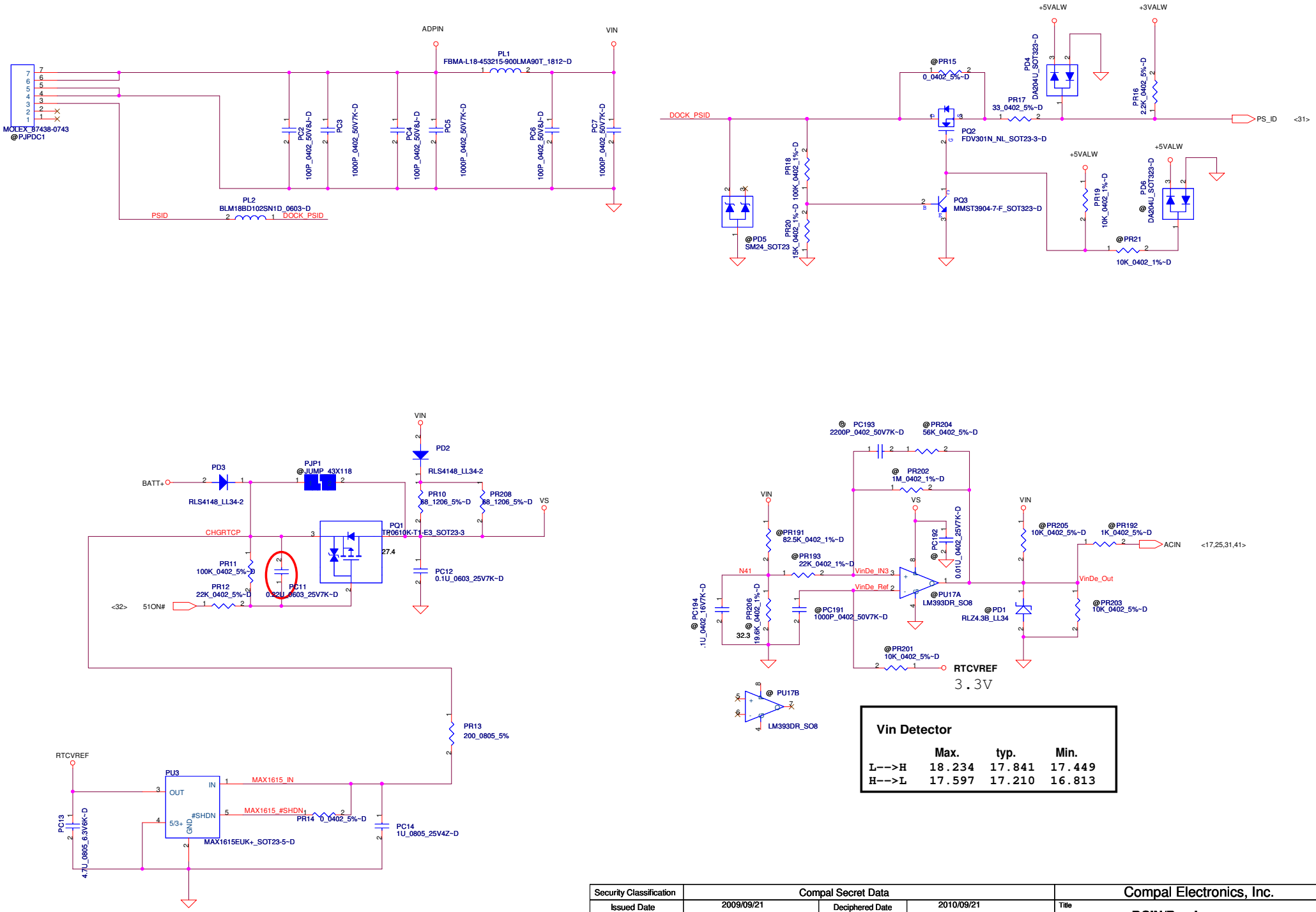

Vin Detector

	Max.	typ.	Min.
L-->H	18.234	17.841	17.449
H-->L	17.597	17.210	16.813

Security Classification	Compal Secret Data		
Issued Date	2009/09/21	Deciphered Date	2010/09/21

THIS SHEET OF ENGINEERING DRAWING IS THE PROPRIETARY PROPERTY OF COMPAL ELECTRONICS, INC. AND CONTAINS CONFIDENTIAL AND TRADE SECRET INFORMATION. THIS SHEET MAY NOT BE TRANSFERED FROM THE CUSTODY OF THE COMPETENT DIVISION OF R&D DEPARTMENT EXCEPT AS AUTHORIZED BY COMPAL ELECTRONICS, INC. NEITHER THIS SHEET NOR THE INFORMATION IT CONTAINS MAY BE USED BY OR DISCLOSED TO ANY THIRD PARTY WITHOUT PRIOR WRITTEN CONSENT OF COMPAL ELECTRONICS, INC.

Compal Electronics, Inc.

Title: **DCIN/Precharger**

Size: Custom | Document Number: NAT02 M/B LA-5154P Schematic | Rev: 1.0

Date: Thursday, November 26, 2009 | Sheet 40 of 49

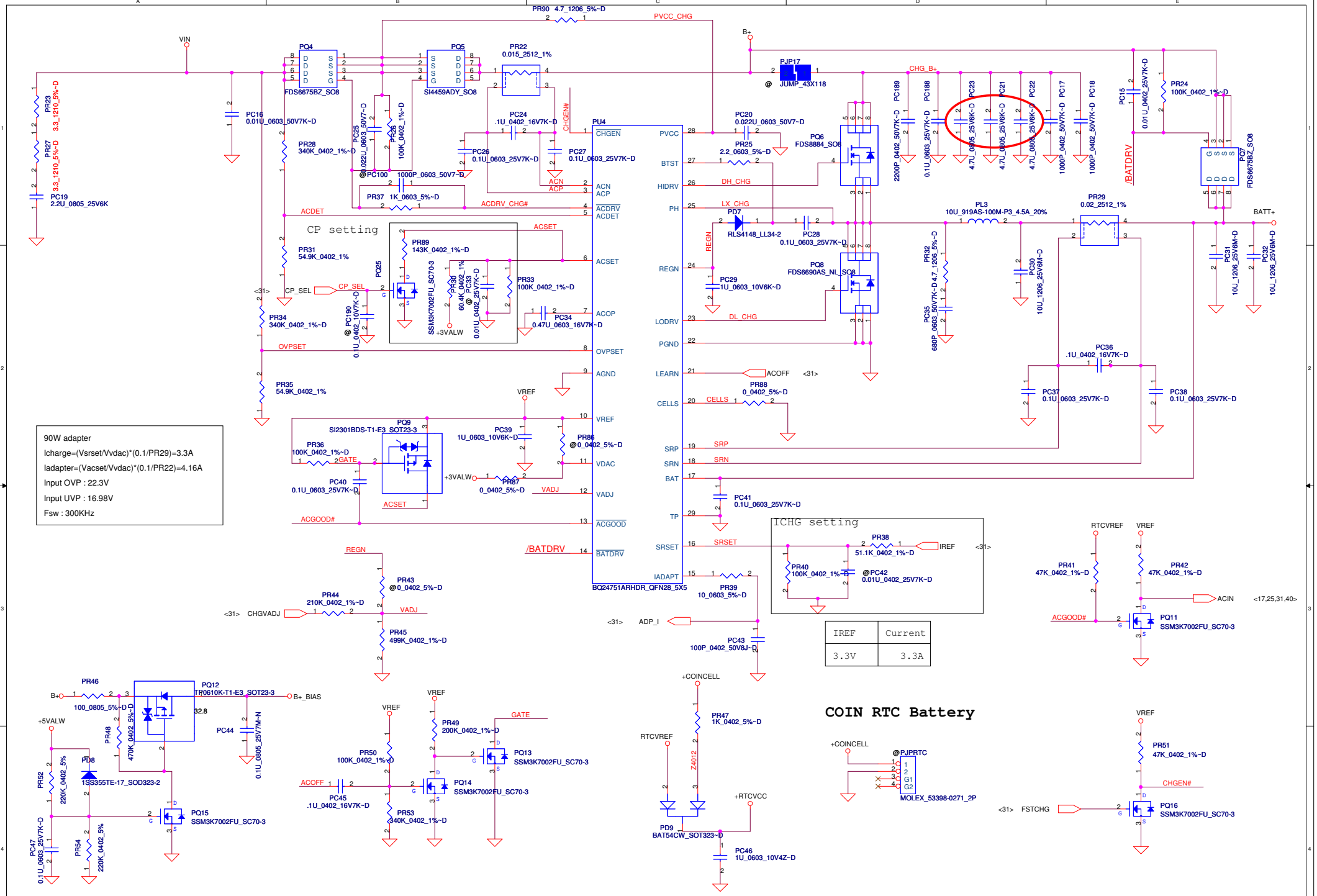

IREF	Current
3.3V	3.3A

Security Classification	Compal Secret Data		
Issued Date	2009/09/21	Deciphered Date	2010/09/21

THIS SHEET OF ENGINEERING DRAWING IS THE PROPRIETARY PROPERTY OF COMPAL ELECTRONICS, INC. AND CONTAINS CONFIDENTIAL AND TRADE SECRET INFORMATION. THIS SHEET MAY NOT BE TRANSFERED FROM THE CUSTODY OF THE COMPETENT DIVISION OF R&D DEPARTMENT EXCEPT AS AUTHORIZED BY COMPAL ELECTRONICS, INC. NEITHER THIS SHEET NOR THE INFORMATION IT CONTAINS MAY BE USED BY OR DISCLOSED TO ANY THIRD PARTY WITHOUT PRIOR WRITTEN CONSENT OF COMPAL ELECTRONICS, INC.

Compal Electronics, Inc.

Title: **Charger**

Size: B | Document Number: NAT02 M/B LA-5154P Schematic | Rev: 1.0

Date: Thursday, November 26, 2009 | Sheet 41 of 49

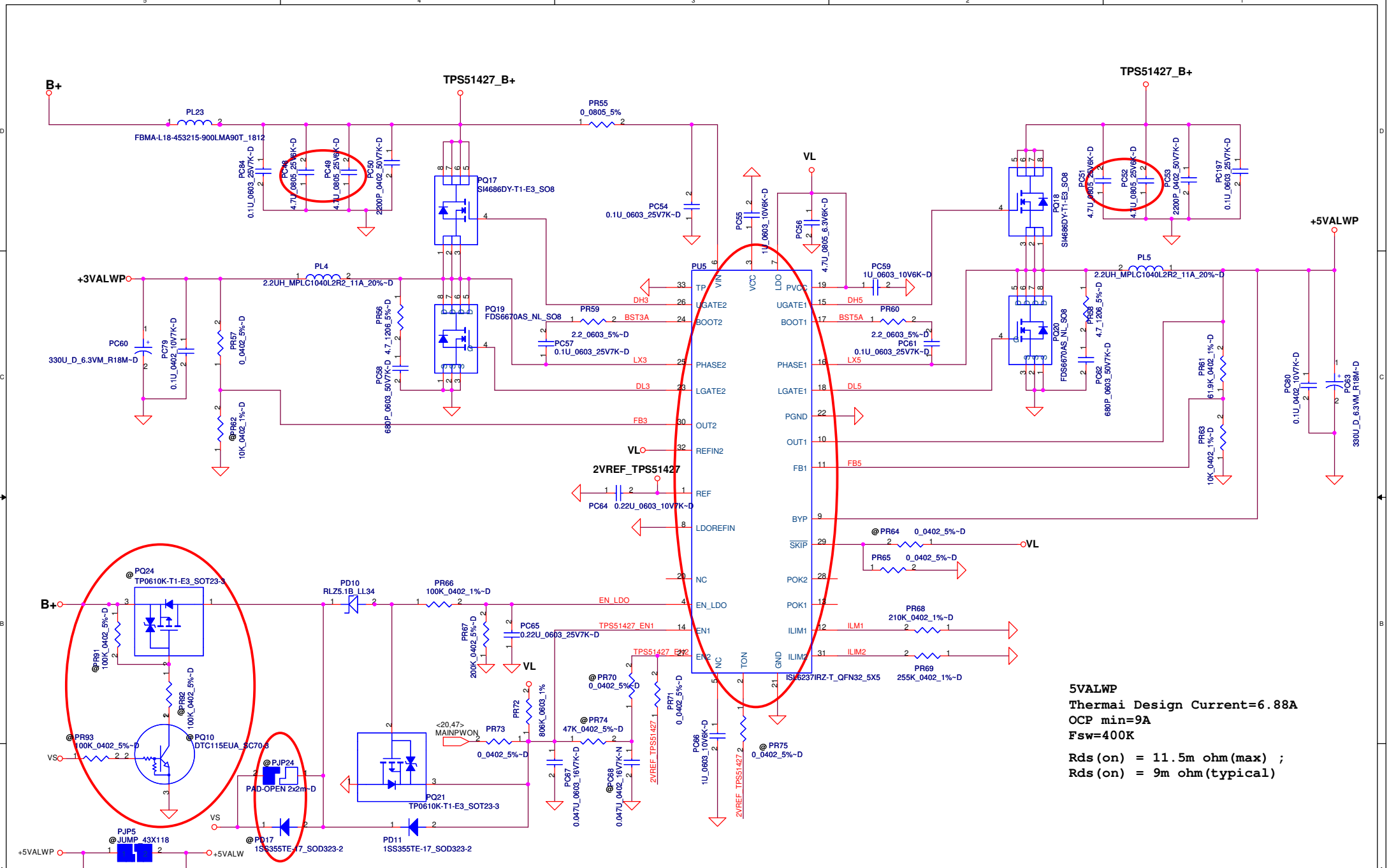

Security Classification	Compal Secret Data		
Issued Date	2009/09/21	Deciphered Date	2010/09/21

THIS SHEET OF ENGINEERING DRAWING IS THE PROPRIETARY PROPERTY OF COMPAL ELECTRONICS, INC. AND CONTAINS CONFIDENTIAL AND TRADE SECRET INFORMATION. THIS SHEET MAY NOT BE TRANSFERED FROM THE CUSTODY OF THE COMPETENT DIVISION OF R&D DEPARTMENT EXCEPT AS AUTHORIZED BY COMPAL ELECTRONICS, INC. NEITHER THIS SHEET NOR THE INFORMATION IT CONTAINS MAY BE USED BY OR DISCLOSED TO ANY THIRD PARTY WITHOUT PRIOR WRITTEN CONSENT OF COMPAL ELECTRONICS, INC.

Compal Electronics, Inc.

Title: +3VALWP/+5VALWP

Size: Custom | Document Number: NAT02 M/B LA-5154P Schematic | Rev: 1.0

Date: Thursday, November 26, 2009 | Sheet 42 of 49

+1.05VSP
Thermal Desig Current=5A
OCP min=9A
Fsw=300KHz

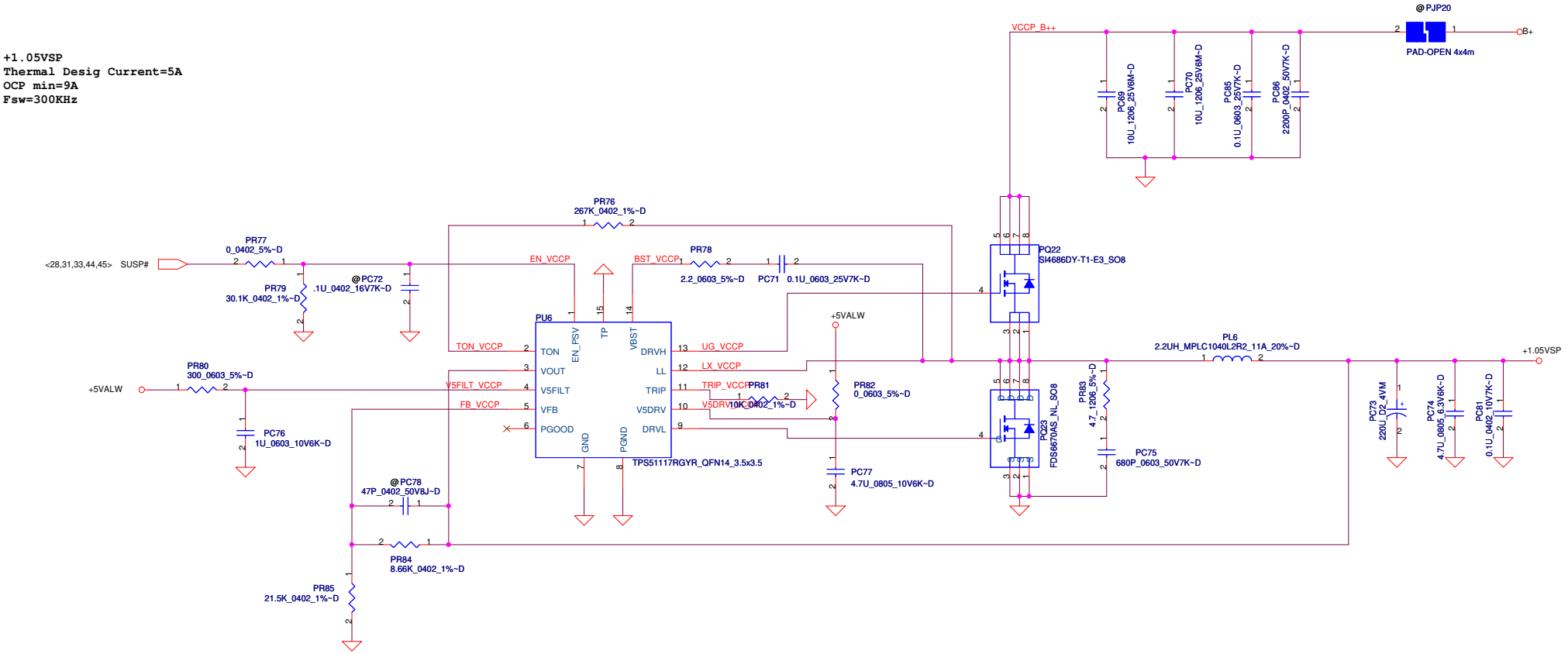

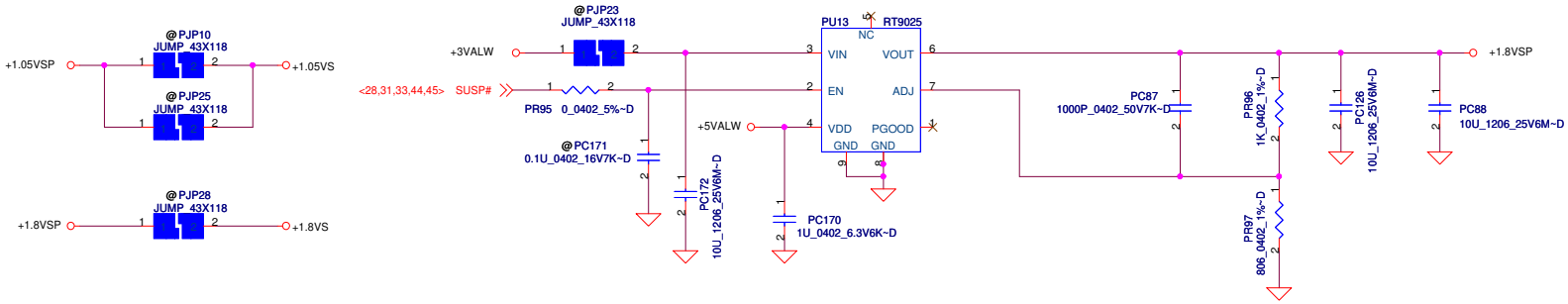

+1.8VSP
Thermal Desig Current=0.69A

Security Classification	Compal Secret Data		
Issued Date	2009/09/21	Deciphered Date	2010/09/21

THIS SHEET OF ENGINEERING DRAWING IS THE PROPRIETARY PROPERTY OF COMPAL ELECTRONICS, INC. AND CONTAINS CONFIDENTIAL AND TRADE SECRET INFORMATION. THIS SHEET MAY NOT BE TRANSFERED FROM THE CUSTODY OF THE COMPETENT DIVISION OF R&D DEPARTMENT EXCEPT AS AUTHORIZED BY COMPAL ELECTRONICS, INC. NEITHER THIS SHEET NOR THE INFORMATION IT CONTAINS MAY BE USED BY OR DISCLOSED TO ANY THIRD PARTY WITHOUT PRIOR WRITTEN CONSENT OF COMPAL ELECTRONICS, INC.

Compal Electronics, Inc.

Title: **+1.05VSP/+1.8VSP**

Size: Custom | Document Number: NAT02 M/B LA-5154P Schematic | Rev: 1.0

Date: Thursday, November 26, 2009 | Sheet 43 of 49

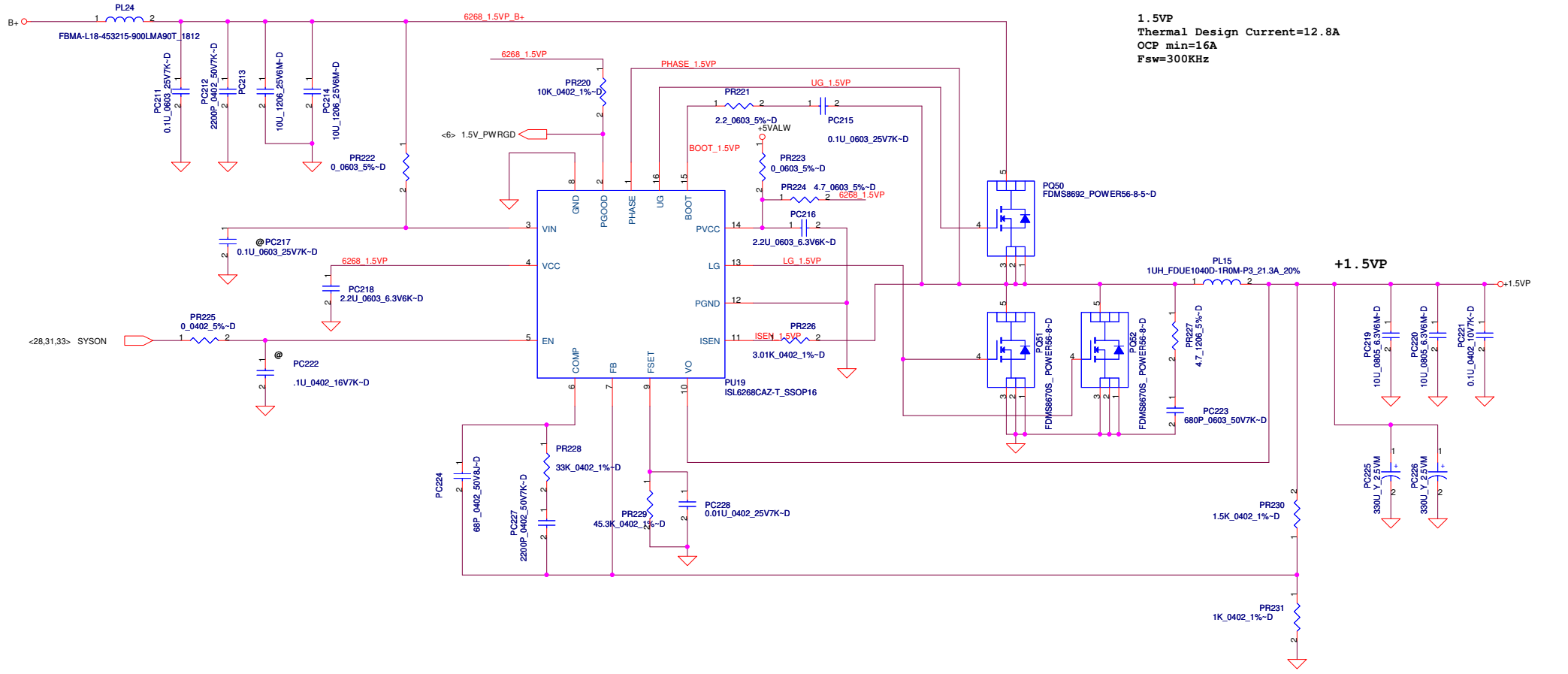

Security Classification	Compal Secret Data		
Issued Date	2009/09/21	Deciphered Date	2010/09/21

THIS SHEET OF ENGINEERING DRAWING IS THE PROPRIETARY PROPERTY OF COMPAL ELECTRONICS, INC. AND CONTAINS CONFIDENTIAL AND TRADE SECRET INFORMATION. THIS SHEET MAY NOT BE TRANSFERED FROM THE CUSTODY OF THE COMPETENT DIVISION OF R&D DEPARTMENT EXCEPT AS AUTHORIZED BY COMPAL ELECTRONICS, INC. NEITHER THIS SHEET NOR THE INFORMATION IT CONTAINS MAY BE USED BY OR DISCLOSED TO ANY THIRD PARTY WITHOUT PRIOR WRITTEN CONSENT OF COMPAL ELECTRONICS, INC.

Compal Electronics, Inc.

Title: **+1.5VSP/+0.75VSP**

Size: Custom | Document Number: NAT02 M/B LA-5154P Schematic | Rev: 1.0

Date: Thursday, November 26, 2009 | Sheet 44 of 49

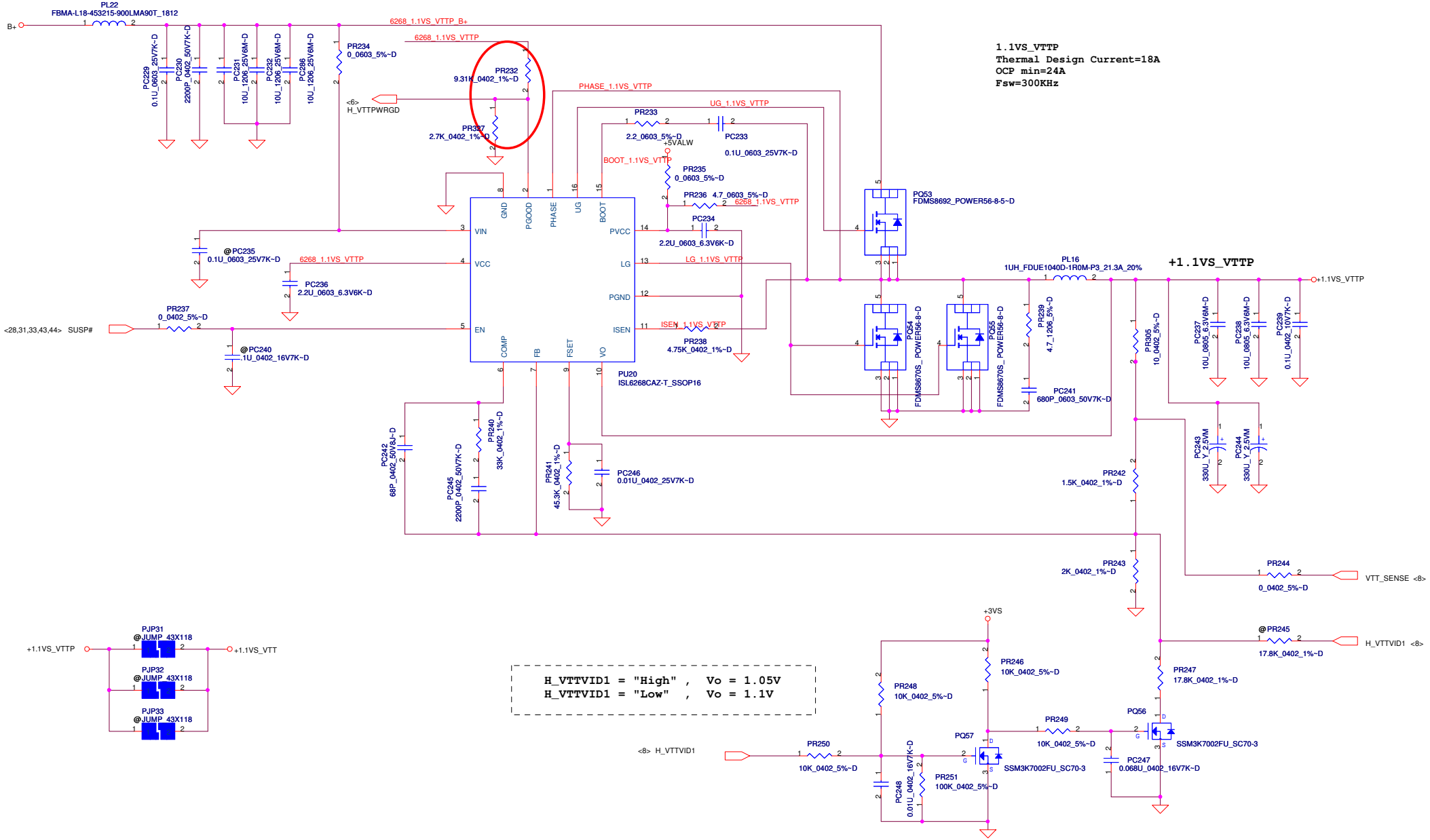

Security Classification	Compal Secret Data		
Issued Date	2009/09/21	Deciphered Date	2010/09/21

THIS SHEET OF ENGINEERING DRAWING IS THE PROPRIETARY PROPERTY OF COMPAL ELECTRONICS, INC. AND CONTAINS CONFIDENTIAL AND TRADE SECRET INFORMATION. THIS SHEET MAY NOT BE TRANSFERED FROM THE CUSTODY OF THE COMPETENT DIVISION OF R&D DEPARTMENT EXCEPT AS AUTHORIZED BY COMPAL ELECTRONICS, INC. NEITHER THIS SHEET NOR THE INFORMATION IT CONTAINS MAY BE USED BY OR DISCLOSED TO ANY THIRD PARTY WITHOUT PRIOR WRITTEN CONSENT OF COMPAL ELECTRONICS, INC.

Compal Electronics, Inc.

Title: +1.1VS_VTTP

Size: Custom | Document Number: NAT02 M/B LA-5154P Schematic | Rev: 1.0

Date: Thursday, November 26, 2009 | Sheet 45 of 49

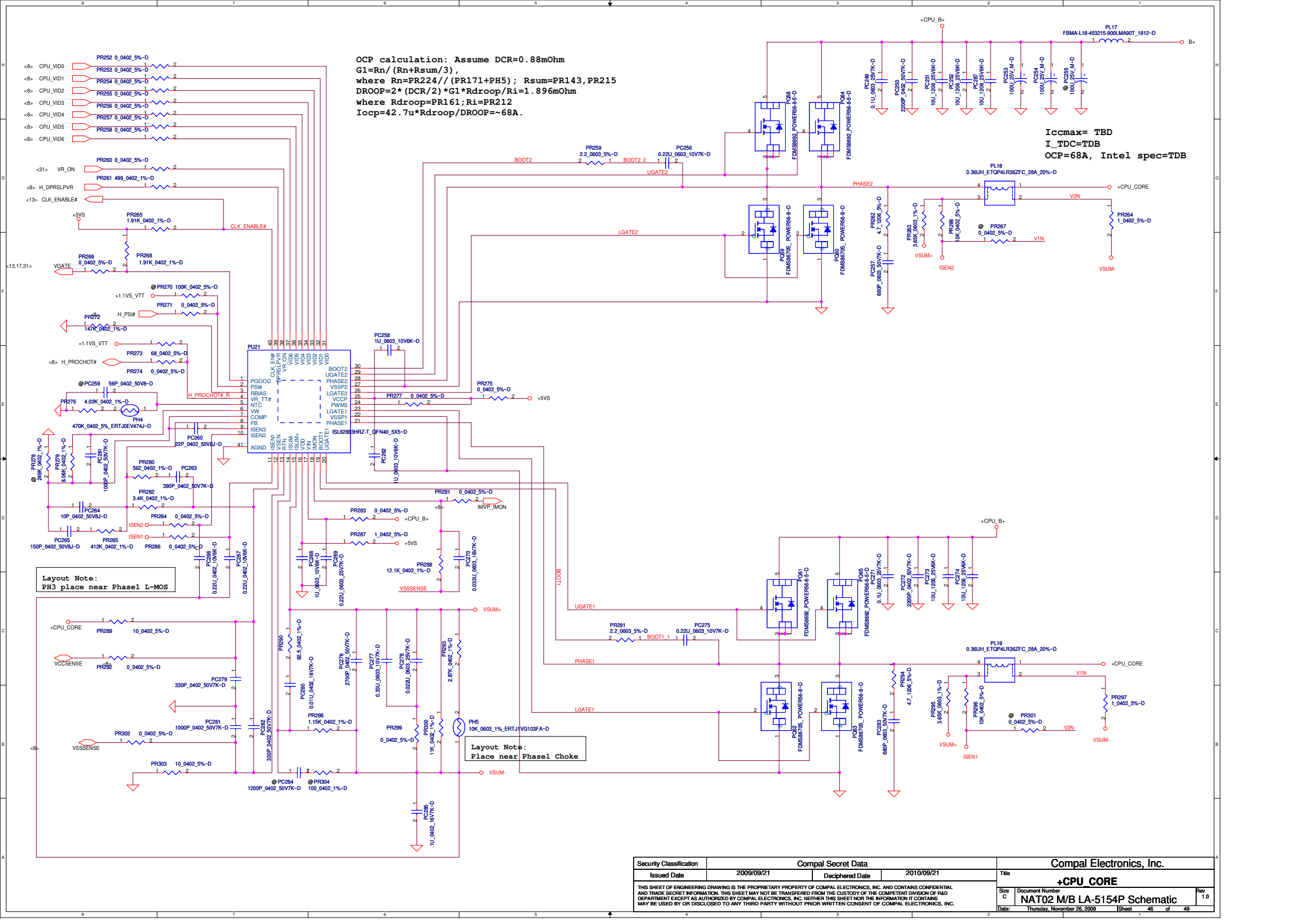

Security Classification	Compal Secret Data		
Issued Date	2009/09/21	Deciphered Date	2010/09/21

THIS SHEET OF ENGINEERING DRAWING IS THE PROPRIETARY PROPERTY OF COMPAL ELECTRONICS, INC. AND CONTAINS CONFIDENTIAL AND TRADE SECRET INFORMATION. THIS SHEET MAY NOT BE TRANSFERED FROM THE CUSTODY OF THE COMPETENT DIVISION OF R&D DEPARTMENT EXCEPT AS AUTHORIZED BY COMPAL ELECTRONICS, INC. NEITHER THIS SHEET NOR THE INFORMATION IT CONTAINS MAY BE USED BY OR DISCLOSED TO ANY THIRD PARTY WITHOUT PRIOR WRITTEN CONSENT OF COMPAL ELECTRONICS, INC.

Compal Electronics, Inc.

Title: +CPU_CORE

Size: C | Document Number: NAT02 M/B LA-5154P Schematic | Rev: 1.0

Date: Thursday, November 26, 2009 | Sheet 46 of 49

Battery Connect/OTP

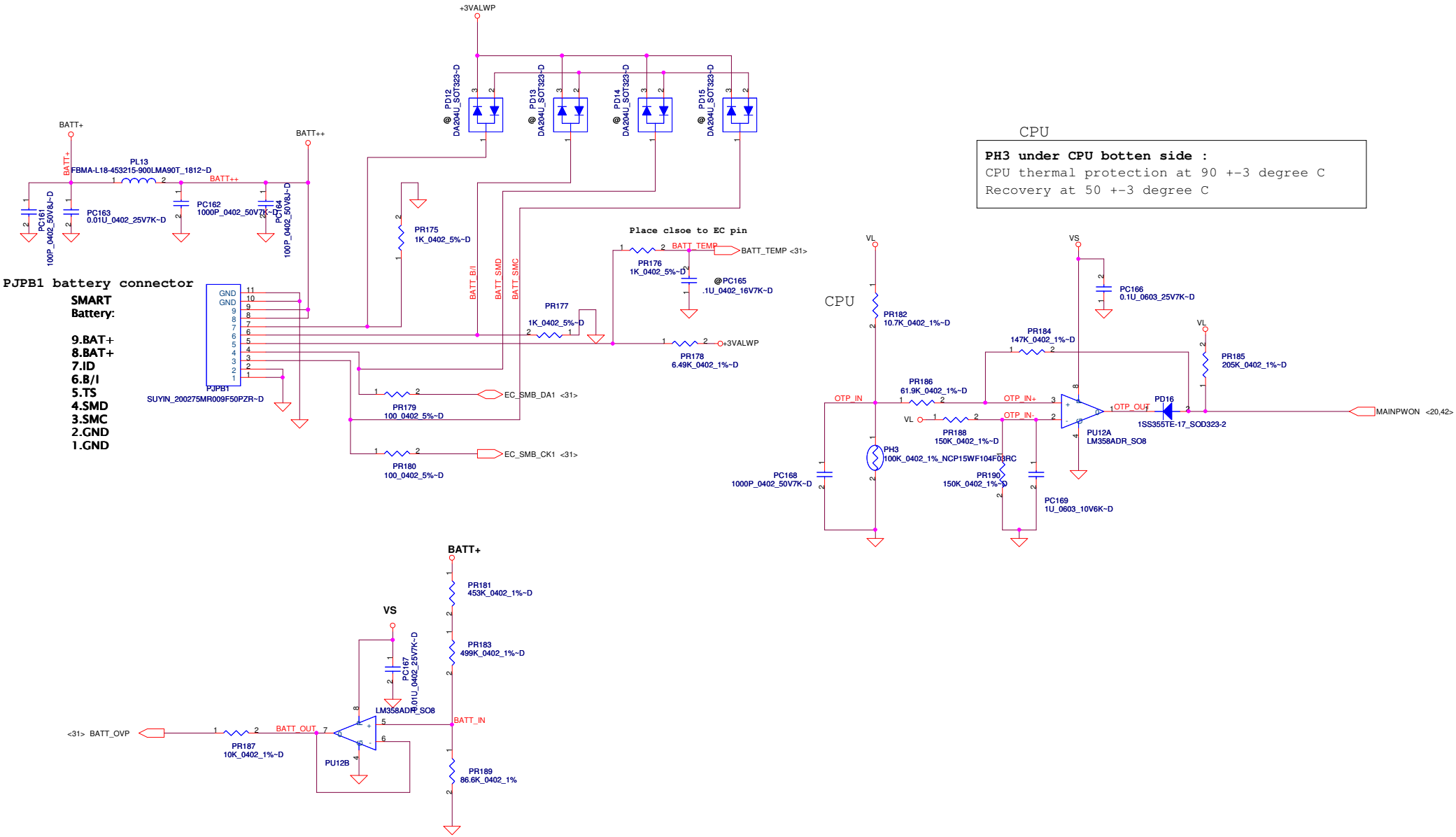

LI-3S :13.5V----BATT_OVP=1.126V
BATT_OVP=0.08338*BATT+

Security Classification	Compal Secret Data			Compal Electronics, Inc.
Issued Date	2009/09/21	Deciphered Date	2010/09/21	Title: BATTERY CONN
				Size: Custom; Document Number: NAT02 M/B LA-5154P Schematic; Rev: 1.0
				Date: Thursday, November 26, 2009; Sheet 47 of 49

THIS SHEET OF ENGINEERING DRAWING IS THE PROPRIETARY PROPERTY OF COMPAL ELECTRONICS, INC. AND CONTAINS CONFIDENTIAL AND TRADE SECRET INFORMATION. THIS SHEET MAY NOT BE TRANSFERED FROM THE CUSTODY OF THE COMPETENT DIVISION OF R&D DEPARTMENT EXCEPT AS AUTHORIZED BY COMPAL ELECTRONICS, INC. NEITHER THIS SHEET NOR THE INFORMATION IT CONTAINS MAY BE USED BY OR DISCLOSED TO ANY THIRD PARTY WITHOUT PRIOR WRITTEN CONSENT OF COMPAL ELECTRONICS, INC.

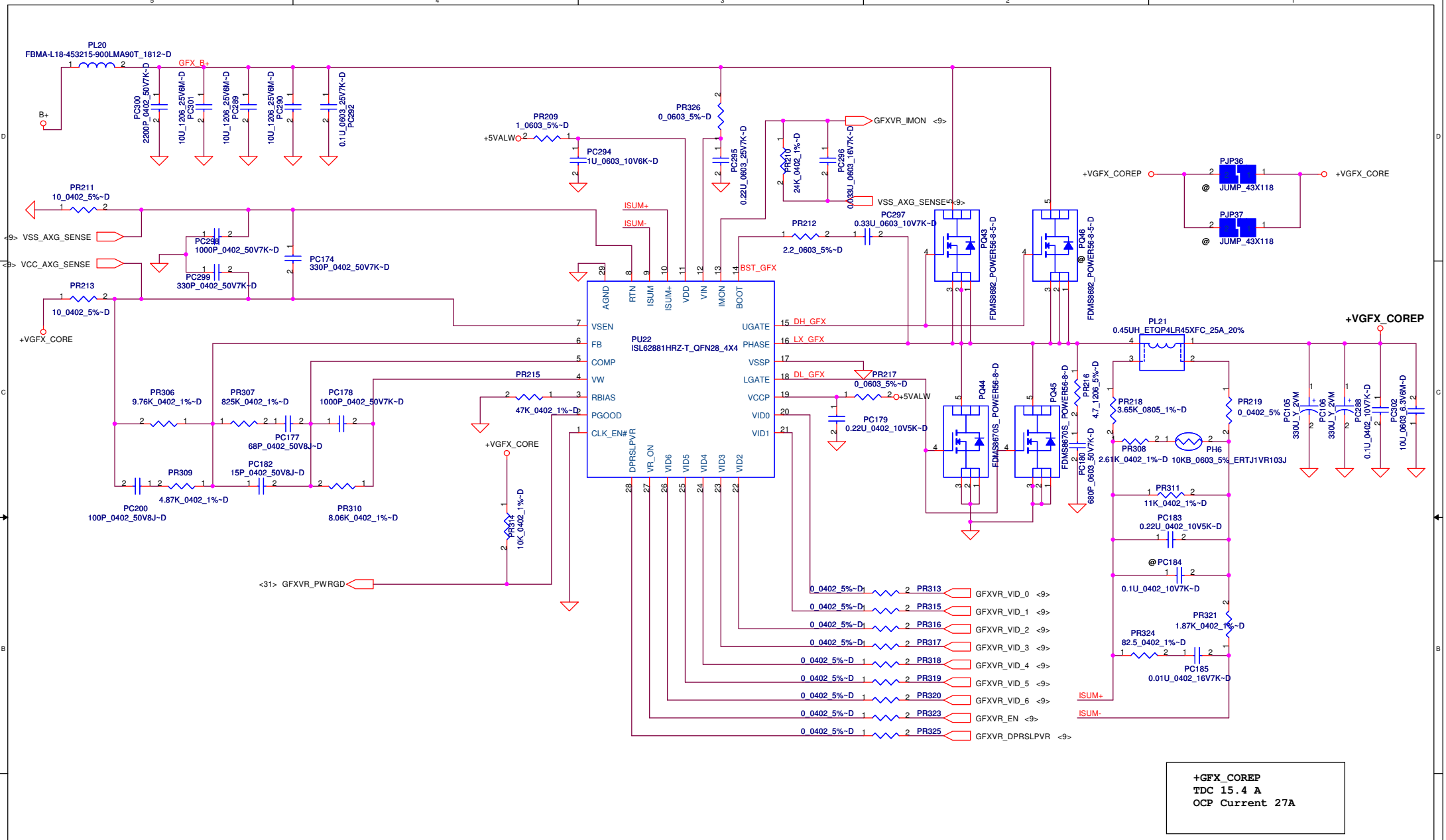

+GFX_COREP
TDC 15.4 A
OCP Current 27A

Security Classification	Compal Secret Data		
Issued Date	2009/09/21	Deciphered Date	2010/09/21

THIS SHEET OF ENGINEERING DRAWING IS THE PROPRIETARY PROPERTY OF COMPAL ELECTRONICS, INC. AND CONTAINS CONFIDENTIAL AND TRADE SECRET INFORMATION. THIS SHEET MAY NOT BE TRANSFERED FROM THE CUSTODY OF THE COMPETENT DIVISION OF R&D DEPARTMENT EXCEPT AS AUTHORIZED BY COMPAL ELECTRONICS, INC. NEITHER THIS SHEET NOR THE INFORMATION IT CONTAINS MAY BE USED BY OR DISCLOSED TO ANY THIRD PARTY WITHOUT PRIOR WRITTEN CONSENT OF COMPAL ELECTRONICS, INC.

Compal Electronics, Inc.

Title: +GFX_COREP

Size | Document Number: NAT02 M/B LA-5154P Schematic | Rev 1.0

Date: Thursday, November 26, 2009 | Sheet 48 of 49

Version Change List (P. I. R. List) Page 1

Item	Page#	Title	Date	Request Owner	Issue Description	Solution Description	Rev.
01	P51	+1.1VS_VTTP	08/31	Lin Will	Slove EMI	Add PL22 and Change PR233 form 0 ohm to 2.2 ohm.	X01
02	P53	+CPU_Core	08/31	Lin Will	Slove EMI	Change PR259 and PR291 from 0 ohm to 2.2 ohm.	X01
03	P55	+GFX_COREP	08/31	Lin Will	Adjust load-line and Imon	Change PR306 form 9.54K to 9.76K, PR210 from 22.3K to 24K and PC296 from 0.22uF to 0.033uF.	X01
04	P55	+GFX_COREP	08/31	Lin Will	Adjust output voltage ripple and thermal dispation	Add PQ46 and change PC289, PC290, PC301 from 4.7uF to 10uF, and PC105, PC106 from 330uF 9mohm to 330uF 6mohm.	X01
05	P43	+1.05VSP/+0.75VSP	10/14	Lin Will	Slove the IC input power sequence.	Change TPS51117 V5FILT and V5DRV from 5VS to 5VALW.	X02
06	P42	+3VALWP/+5VALWP	10/14	Lin Will	Slove EMI.	Change PJP19 to PL23, and PR59, PR60 from 0 ohm to 2.2 ohm.	X02
07	P44	+1.5VSP/+0.75VSP	10/14	Lin Will	Slove EMI.	Change PJP29 to PL24.	X02
08	P45	+1.1VS_VTTP	11/20	Lin Will	Low down the power consumption.	Change PR232 from 43.2K to 9.31K, and add PR327 2.7K.	X03
09	P41/P42	Charger +3VALWP/+5VALWP	11/20	Lin Will	1206 size shortage issue.	Change SE142475K8L(1206) to SE000006R8L(0805), and SE041224K8L(1206) to SE000005Z8L(0603).	X03
10	P42	+3VALWP/+5VALWP	11/20	Lin Will	When adapter inserts and pulls out quickly two twice, it will make TPS51427 out of electricity.	Add PR91,PR92,PR93 100K, PQ24 TP0610K, PQ10 DTC115EUA, and PD17 1SS355TE-17. But all unpop. Change PU5 to ISL6237, and add PJP24.	X03

THIS SHEET OF ENGINEERING DRAWING IS THE PROPRIETARY PROPERTY OF COMPAL ELECTRONICS, INC. AND CONTAINS CONFIDENTIAL AND TRADE SECRET INFORMATION. THIS SHEET MAY NOT BE TRANSFERED FROM THE CUSTODY OF THE COMPETENT DIVISION OF R&D DEPARTMENT EXCEPT AS AUTHORIZED BY COMPAL ELECTRONICS, INC. NEITHER THIS SHEET NOR THE INFORMATION IT CONTAINS MAY BE USED BY OR DISCLOSED TO ANY THIRD PARTY WITHOUT PRIOR WRITTEN CONSENT OF COMPAL ELECTRONICS, INC.