# Compal confidential

## Schematics Document

## Mobile Penryn uFCPGA with Intel Cantiga_PM+ICH9-M core logic

2009-02-13

REV : 1.0

| Security Classification | Compal Secret Data | | |
|---|---|---|---|
| Issued Date | 2008/12/10 | Deciphered Date | 2008/12/10 |

THIS SHEET OF ENGINEERING DRAWING IS THE PROPRIETARY PROPERTY OF COMPAL ELECTRONICS, INC. AND CONTAINS CONFIDENTIAL AND TRADE SECRET INFORMATION. THIS SHEET MAY NOT BE TRANSFERED FROM THE CUSTODY OF THE COMPETENT DIVISION OF R&D DEPARTMENT EXCEPT AS AUTHORIZED BY COMPAL ELECTRONICS, INC. NEITHER THIS SHEET NOR THE INFORMATION IT CONTAINS MAY BE USED BY OR DISCLOSED TO ANY THIRD PARTY WITHOUT PRIOR WRITTEN CONSENT OF COMPAL ELECTRONICS, INC.

*Compal Electronics, Inc.*

Title: *Cover Sheet*

Size: Custom | Document Number: *LA-4731P Rhett discrete* | Rev: 0.1

Date: Friday, February 13, 2009 | Sheet 1 of 51

Compal confidential

# Montevina Consumer Discrete

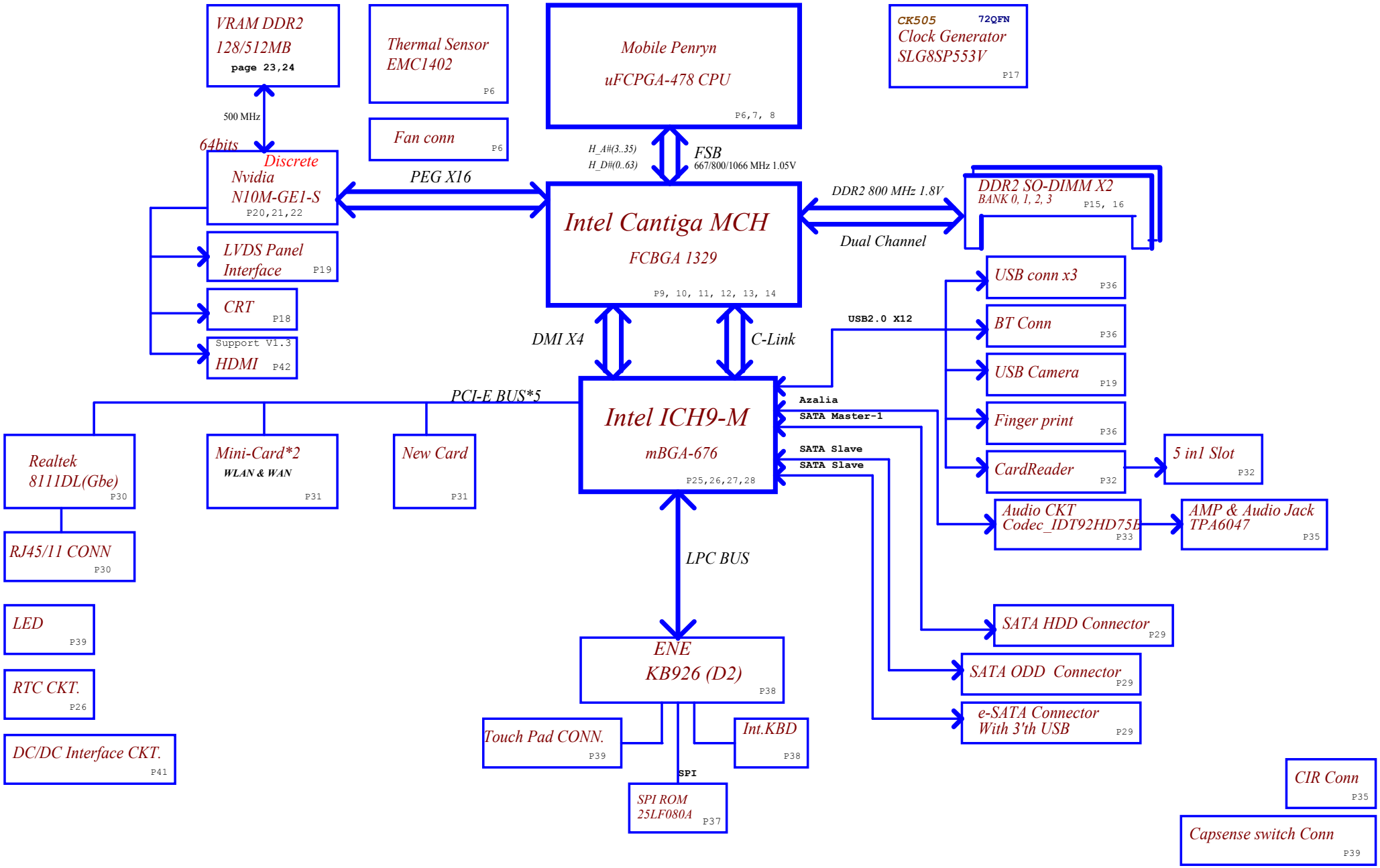


| Security Classification | Compal Secret Data | | |
|---|---|---|---|
| Issued Date | 2008/11/04 | Deciphered Date | 2008/11/04 |

THIS SHEET OF ENGINEERING DRAWING IS THE PROPRIETARY PROPERTY OF COMPAL ELECTRONICS, INC. AND CONTAINS CONFIDENTIAL AND TRADE SECRET INFORMATION. THIS SHEET MAY NOT BE TRANSFERED FROM THE CUSTODY OF THE COMPETENT DIVISION OF R&D DEPARTMENT EXCEPT AS AUTHORIZED BY COMPAL ELECTRONICS, INC. NEITHER THIS SHEET NOR THE INFORMATION IT CONTAINS MAY BE USED BY OR DISCLOSED TO ANY THIRD PARTY WITHOUT PRIOR WRITTEN CONSENT OF COMPAL ELECTRONICS, INC.

**Compal Electronics, Inc.**

Title: **Block Diagram**

Size: Custom | Document Number: LA-4731P Rhett discrete | Rev: 0.1

Date: Thursday, February 12, 2009 | Sheet 2 of 51

## Voltage Rails

O MEANS ON

X MEANS OFF

| power plane / State | +B | +5VALW<br>+3VALW | +1.8V | +5VS<br>+3VS<br>+1.5VS<br>+0.9V<br>+VCCP<br>+CPU_CORE<br>+2.5VS<br>+1.8VS<br>+NVVDD<br>+PCIE |
|---|---|---|---|---|
| S0 | O | O | O | O |
| S1 | O | O | O | O |
| S3 | O | O | O | X |
| S5 S4/AC | O | O | X | X |
| S5 S4/ Battery only | O | X | X | X |
| S5 S4/AC & Battery don't exist | X | X | X | X |

## BOM

| | | | |
|---|---|---|---|
| NB | SA00002JJ80 | R1 | FRU |
| NB | SA00002JJE0 | R3 | |
| SB | SA00002JH50 | R1 | FRU |
| SB | SA00002JHB0 | R3 | |

| | |
|---|---|
| @ : | means just reserve , no build |
| 45@ : | means need be mounted when 45 level assy or rework stage. |
| DEBUG@ : | means just reserve for debug. |
| BATT @ : | means need be mounted when 45 level assy or rework stage. |
| CONN@ : | means ME part |
| ESATA @ : | means just reserve for ESATA |
| GS @ : | means just reserve for G sensor |
| FP @ : | means just reserve for Finger Print |
| NewC@ : | means just reserve for New card |
| Main@ : | means just reserve for Main stream |
| OPP@ : | means just reserve for OPP |
| 2MiniC@ : | means just reserve for 2nd Mini card slot |
| PA @ : | means just reserve for PA |
| PR @ : | means just reserve for PR |
| | |
| | |

## Symbol Note :

: means Digital Ground

: means Analog Ground

## USB assignment:

USB-0 Right side(with ESATA)
USB-1 Left side
USB-2 Left side
USB-3 Dock
USB-4 Camera
USB-5 WLAN
USB-6 Bluetooth
USB-7 Finger Printer
USB-8 MiniCard(WWAN/TV)
USB-9 Express card
USB-10 X
USB-11 X

## PCIe assignment:

PCIe-1 TV tuner/WWAN/Robeson
PCIe-2 X
PCIe-3 WLAN
PCIe-4 GLAN (Marvell)
PCIe-6 New Card

## SMBUS Control Table

| | SOURCE | INVERTER | BATT | SERIAL EEPROM | Thermal Sensor | SODIMM | CLK CHIP | MINI CARD | Sensor board | N10M Thermal Sensor | N10M | G-sensor |
|---|---|---|---|---|---|---|---|---|---|---|---|---|
| SMB_EC_CK1<br>SMB_EC_DA1 | KB926 | X | V | V | X | X | X | X | V | X | X | X |
| SMB_EC_CK2<br>SMB_EC_DA2 | KB926 | X | X | X | V | X | X | X | X | V | V | X |
| ICH_SMBCLK<br>ICH_SMBDATA | ICH9 | X | X | X | X | V | V | V | X | X | X | V |

## NB9M SMBUS Control Table

| | SOURCE | LVDS | CRT | HDMI | HDCP |
|---|---|---|---|---|---|
| DDC2_DATA<br>DDC2_CLK | N10M | V | X | X | X |
| 3VDDCDA<br>3VDDCCL | N10M | X | V | X | X |
| HDMIDAT_VGA<br>HDMICLK_VGA | N10M | X | X | V | X |
| HDCP_SDA<br>HDCP_SCL | N10M | X | X | X | V |

## I2C / SMBUS ADDRESSING

| DEVICE | HEX | ADDRESS |
|---|---|---|
| DDR SO-DIMM 0 | A0 | 1 0 1 0 0 0 0 0 |
| DDR SO-DIMM 1 | A4 | 1 0 1 0 0 1 0 0 |
| CLOCK GENERATOR (EXT.) | D2 | 1 1 0 1 0 0 1 0 |




THIS SHEET OF ENGINEERING DRAWING IS THE PROPRIETARY PROPERTY OF COMPAL ELECTRONICS, INC. AND CONTAINS CONFIDENTIAL AND TRADE SECRET INFORMATION. THIS SHEET MAY NOT BE TRANSFERED FROM THE CUSTODY OF THE COMPETENT DIVISION OF R&D DEPARTMENT EXCEPT AS AUTHORIZED BY COMPAL ELECTRONICS, INC. NEITHER THIS SHEET NOR THE INFORMATION IT CONTAINS MAY BE USED BY OR DISCLOSED TO ANY THIRD PARTY WITHOUT PRIOR WRITTEN CONSENT OF COMPAL ELECTRONICS, INC.

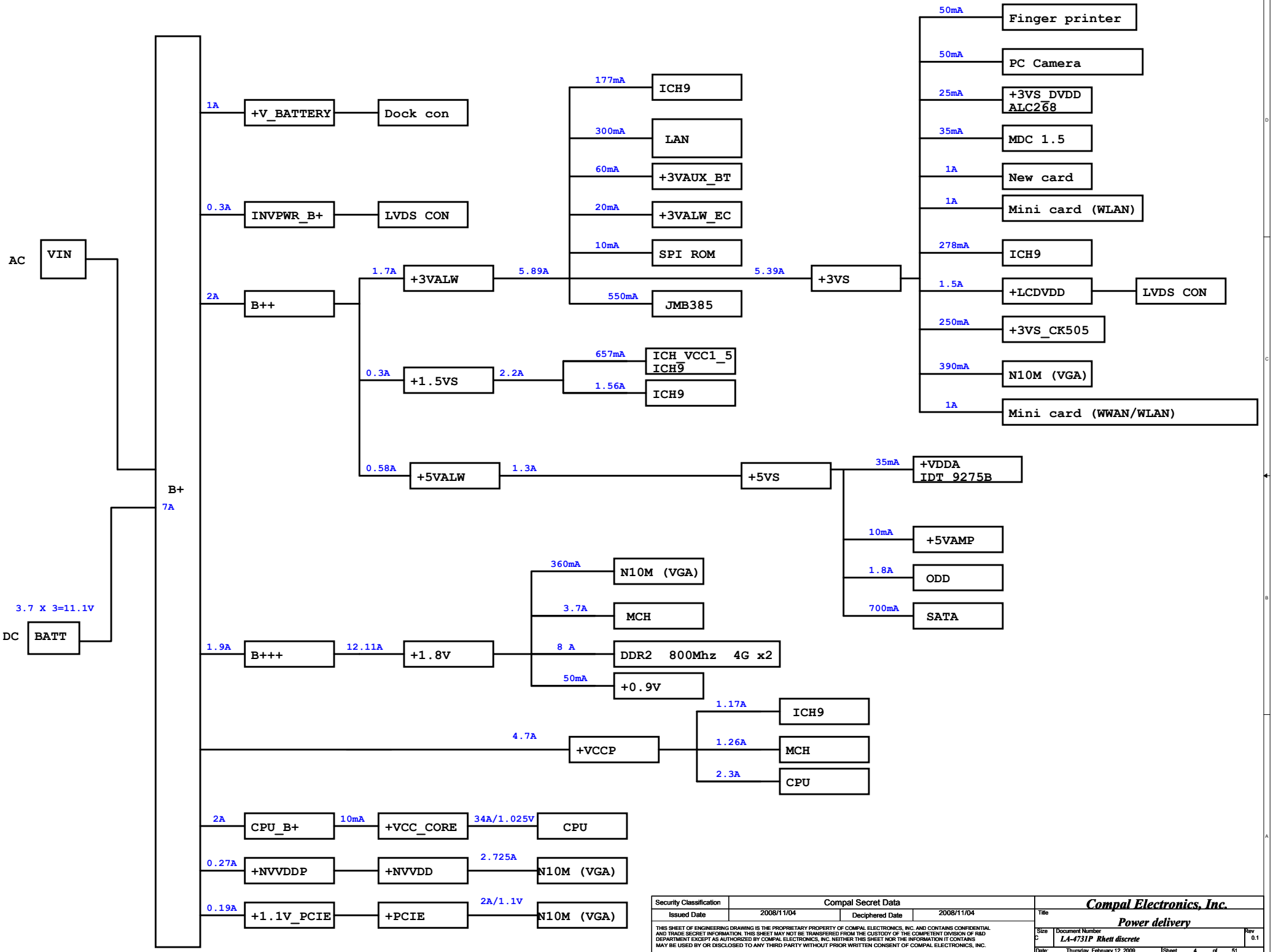


| Security Classification | Compal Secret Data | | |
|---|---|---|---|
| Issued Date | 2008/11/04 | Deciphered Date | 2008/11/04 |

THIS SHEET OF ENGINEERING DRAWING IS THE PROPRIETARY PROPERTY OF COMPAL ELECTRONICS, INC. AND CONTAINS CONFIDENTIAL AND TRADE SECRET INFORMATION. THIS SHEET MAY NOT BE TRANSFERED FROM THE CUSTODY OF THE COMPETENT DIVISION OF R&D DEPARTMENT EXCEPT AS AUTHORIZED BY COMPAL ELECTRONICS, INC. NEITHER THIS SHEET NOR THE INFORMATION IT CONTAINS MAY BE USED BY OR DISCLOSED TO ANY THIRD PARTY WITHOUT PRIOR WRITTEN CONSENT OF COMPAL ELECTRONICS, INC.

**Compal Electronics, Inc.**

Title: **Power delivery**

Size: C | Document Number: *LA-4731P Rhett discrete* | Rev: 0.1

Date: Thursday, February 12, 2009 | Sheet 4 of 51

# JAL50 Discrete power sequence AC mode

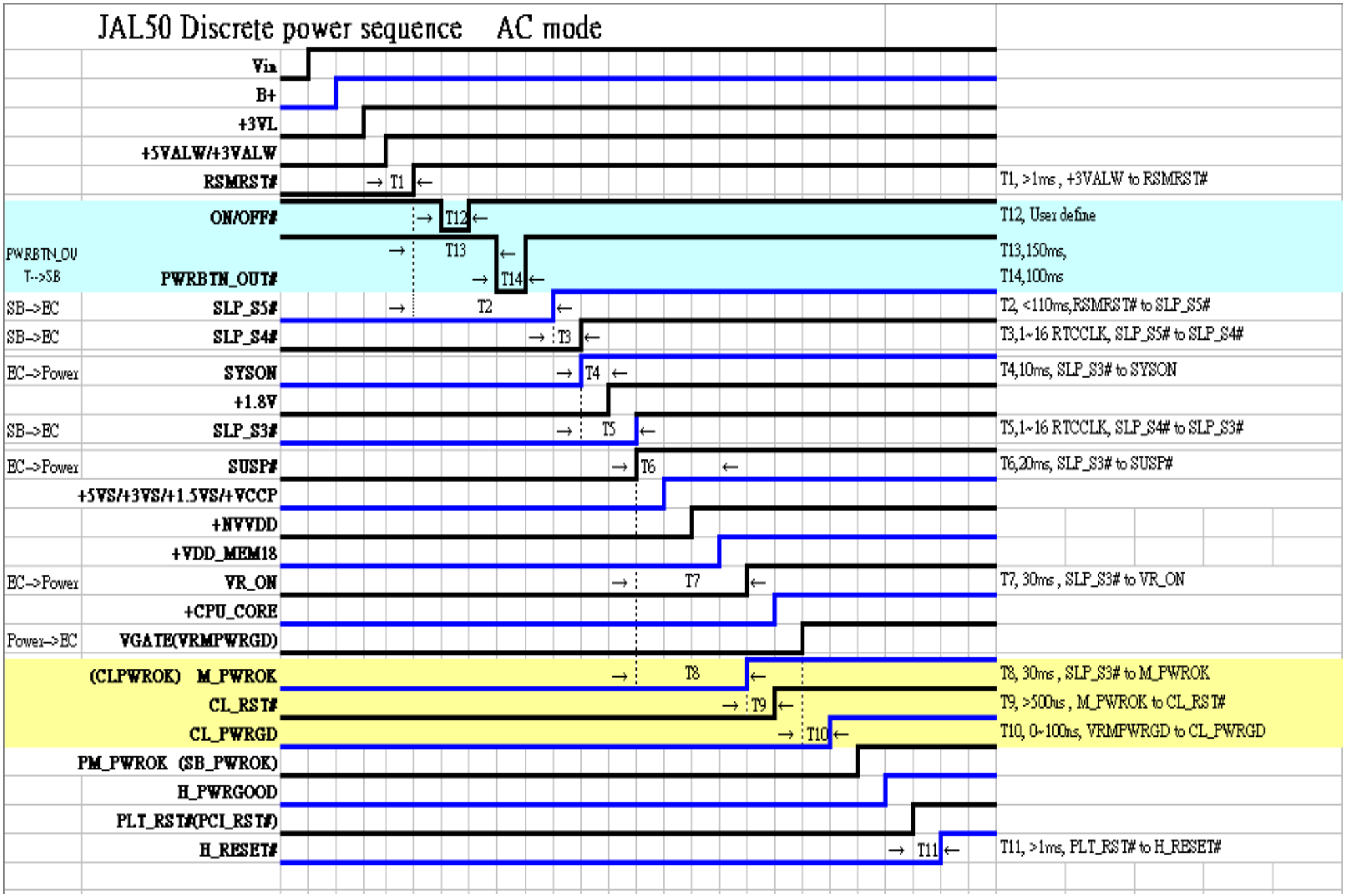


| Security Classification | Compal Secret Data | | |
|---|---|---|---|
| Issued Date | 2008/11/04 | Deciphered Date | 2008/11/04 |

THIS SHEET OF ENGINEERING DRAWING IS THE PROPRIETARY PROPERTY OF COMPAL ELECTRONICS, INC. AND CONTAINS CONFIDENTIAL AND TRADE SECRET INFORMATION. THIS SHEET MAY NOT BE TRANSFERED FROM THE CUSTODY OF THE COMPETENT DIVISION OF R&D DEPARTMENT EXCEPT AS AUTHORIZED BY COMPAL ELECTRONICS, INC. NEITHER THIS SHEET NOR THE INFORMATION IT CONTAINS MAY BE USED BY OR DISCLOSED TO ANY THIRD PARTY WITHOUT PRIOR WRITTEN CONSENT OF COMPAL ELECTRONICS, INC.

**Compal Electronics, Inc.**

Title: **Power sequence**

| Size | Document Number | Rev |
|---|---|---|
| Custom | LA-4731P Rhett discrete | 0.1 |

Date: Thursday, February 12, 2009 | Sheet 5 of 51

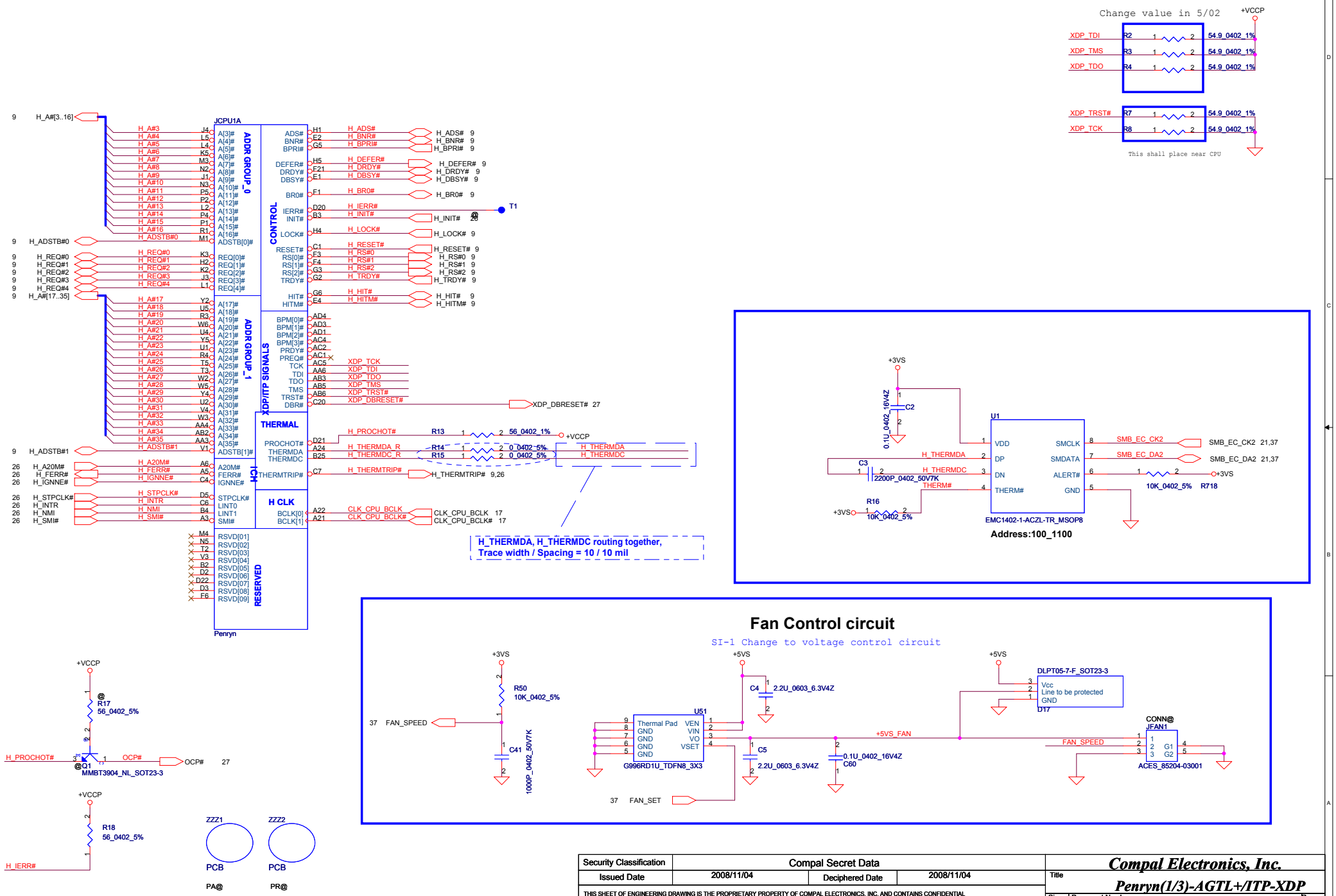


| Security Classification | Compal Secret Data | | |
|---|---|---|---|
| Issued Date | 2008/11/04 | Deciphered Date | 2008/11/04 |

THIS SHEET OF ENGINEERING DRAWING IS THE PROPRIETARY PROPERTY OF COMPAL ELECTRONICS, INC. AND CONTAINS CONFIDENTIAL AND TRADE SECRET INFORMATION. THIS SHEET MAY NOT BE TRANSFERED FROM THE CUSTODY OF THE COMPETENT DIVISION OF R&D DEPARTMENT EXCEPT AS AUTHORIZED BY COMPAL ELECTRONICS, INC. NEITHER THIS SHEET NOR THE INFORMATION IT CONTAINS MAY BE USED BY OR DISCLOSED TO ANY THIRD PARTY WITHOUT PRIOR WRITTEN CONSENT OF COMPAL ELECTRONICS, INC.

Compal Electronics, Inc.

Title: Penryn(1/3)-AGTL+/ITP-XDP

Size: Custom | Document Number: LA-4731P Rhett discrete | Rev: 0.1

Date: Monday, February 16, 2009 | Sheet 6 of 51

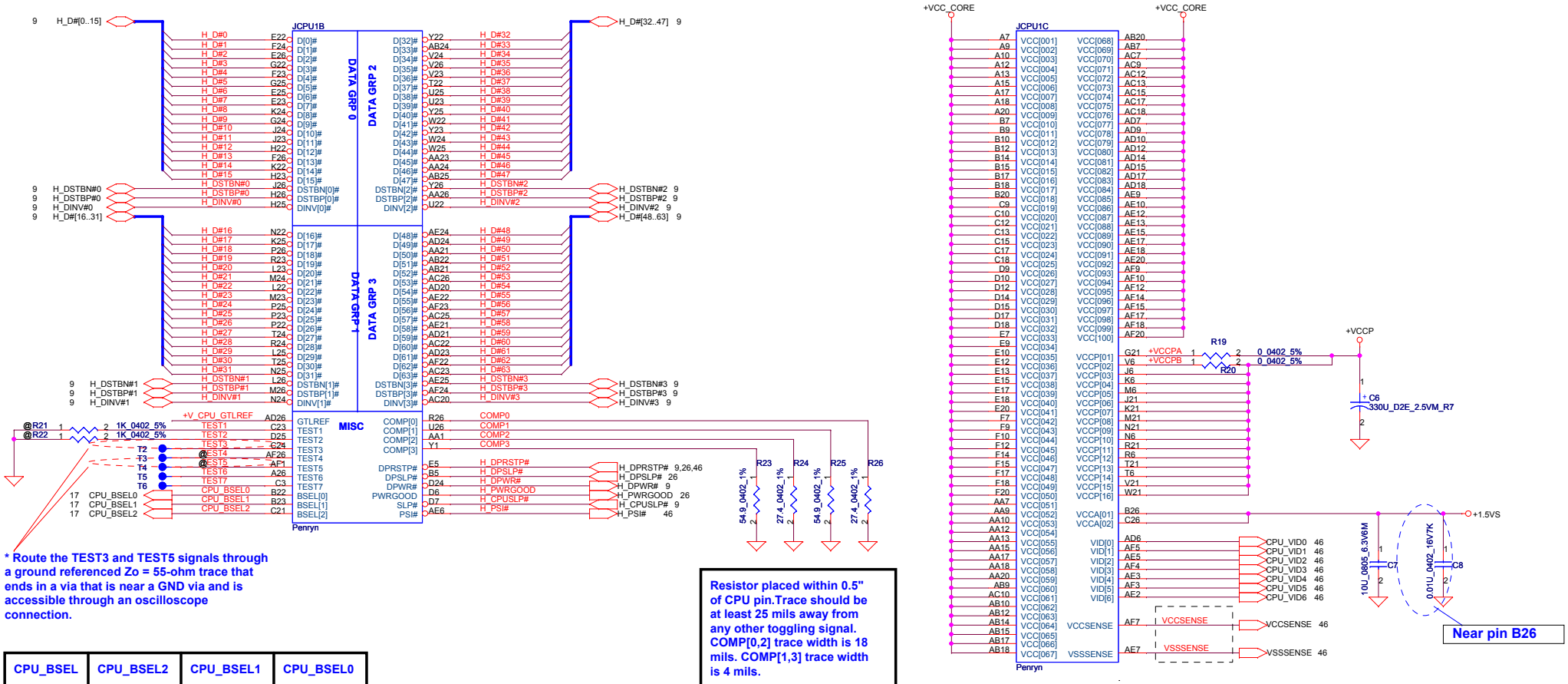


* Route the TEST3 and TEST5 signals through a ground referenced Zo = 55-ohm trace that ends in a via that is near a GND via and is accessible through an oscilloscope connection.

| CPU_BSEL | CPU_BSEL2 | CPU_BSEL1 | CPU_BSEL0 |
|---|---|---|---|
| 166 | 0 | 1 | 1 |
| 200 | 0 | 1 | 0 |
| 266 | 0 | 0 | 0 |

Resistor placed within 0.5" of CPU pin.Trace should be at least 25 mils away from any other toggling signal. COMP[0,2] trace width is 18 mils. COMP[1,3] trace width is 4 mils.

Length match within 25 mils.
The trace width/space/other is 20/7/25.

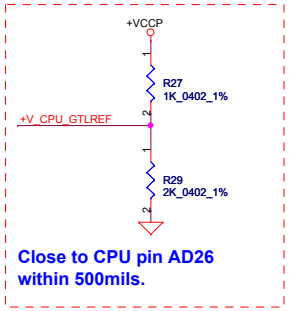


Close to CPU pin AD26 within 500mils.

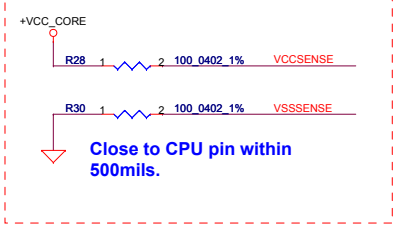


Close to CPU pin within 500mils.

| Security Classification | Compal Secret Data | | |
|---|---|---|---|
| Issued Date | 2008/11/04 | Deciphered Date | 2008/11/04 |

THIS SHEET OF ENGINEERING DRAWING IS THE PROPRIETARY PROPERTY OF COMPAL ELECTRONICS, INC. AND CONTAINS CONFIDENTIAL AND TRADE SECRET INFORMATION. THIS SHEET MAY NOT BE TRANSFERED FROM THE CUSTODY OF THE COMPETENT DIVISION OF R&D DEPARTMENT EXCEPT AS AUTHORIZED BY COMPAL ELECTRONICS, INC. NEITHER THIS SHEET NOR THE INFORMATION IT CONTAINS MAY BE USED BY OR DISCLOSED TO ANY THIRD PARTY WITHOUT PRIOR WRITTEN CONSENT OF COMPAL ELECTRONICS, INC.

Compal Electronics, Inc.

Title: Penryn(2/3)-AGTL+/ITP-XDP

Size: Custom | Document Number: LA-4731P Rhett discrete | Rev: 0.1

Date: Monday, February 16, 2009 | Sheet 7 of 51

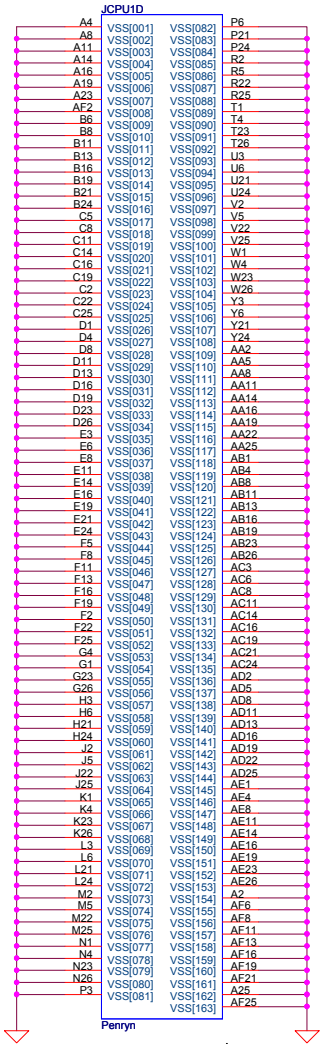


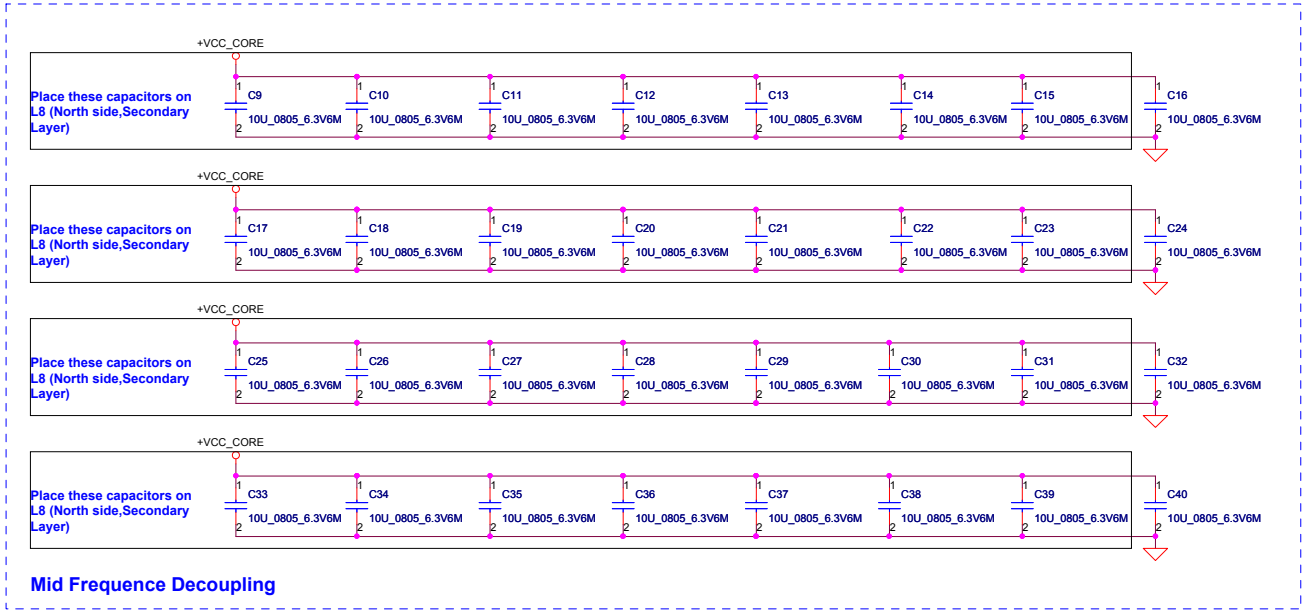


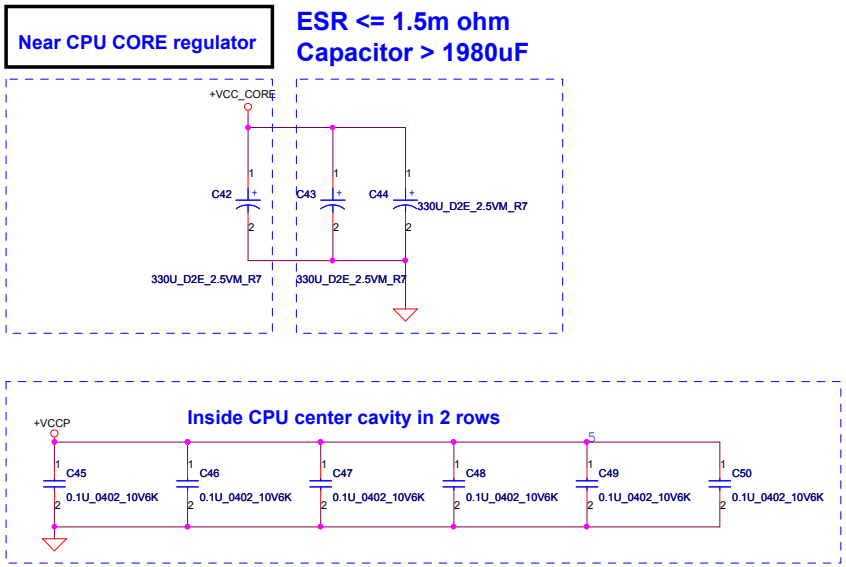





| Security Classification | Compal Secret Data | | |
|---|---|---|---|
| Issued Date | 2008/11/04 | Deciphered Date | 2008/11/04 |

THIS SHEET OF ENGINEERING DRAWING IS THE PROPRIETARY PROPERTY OF COMPAL ELECTRONICS, INC. AND CONTAINS CONFIDENTIAL AND TRADE SECRET INFORMATION. THIS SHEET MAY NOT BE TRANSFERED FROM THE CUSTODY OF THE COMPETENT DIVISION OF R&D DEPARTMENT EXCEPT AS AUTHORIZED BY COMPAL ELECTRONICS, INC. NEITHER THIS SHEET NOR THE INFORMATION IT CONTAINS MAY BE USED BY OR DISCLOSED TO ANY THIRD PARTY WITHOUT PRIOR WRITTEN CONSENT OF COMPAL ELECTRONICS, INC.

**Compal Electronics, Inc.**

Title: **Penryn(3/3)-AGTL+/ITP-XDP**

Size: Custom | Document Number: LA-4731P Rhett discrete | Rev: 0.1

Date: Thursday, February 12, 2009 | Sheet 8 of 51

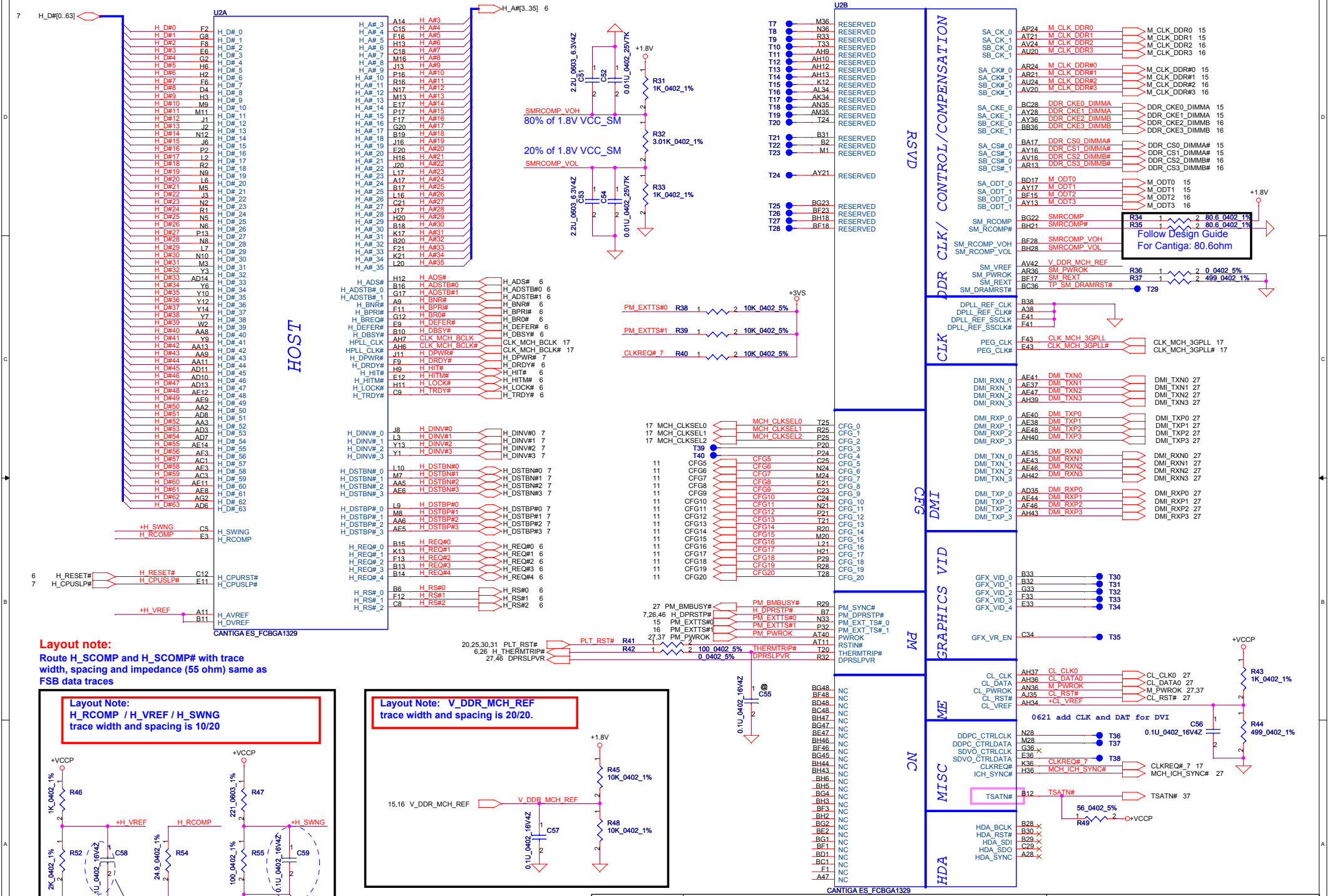
U2A
HOST
CANTIGA ES_FCBGA1329
U2B
RSVD
DDR CLK/ CONTROL/COMPENSATION
CLK
DMI
CFG
GRAPHICS VID
PM
ME
MISC
NC
HDA
80% of 1.8V VCC_SM
20% of 1.8V VCC_SM
SMRCOMP_VOH
SMRCOMP_VOL
R31 1K_0402_1%
R32 3.01K_0402_1%
R33 1K_0402_1%
Follow Design Guide
For Cantiga: 80.6ohm
Layout note:
Route H_SCOMP and H_SCOMP# with trace width, spacing and impedance (55 ohm) same as FSB data traces
Layout Note:
H_RCOMP / H_VREF / H_SWNG
trace width and spacing is 10/20
within 100 mils from NB
Near B3 pin
Layout Note: V_DDR_MCH_REF
trace width and spacing is 20/20.
0621 add CLK and DAT for DVI
Compal Electronics, Inc.
Cantiga(1/6)-AGTL/DMI/DDR
Security Classification
Compal Secret Data
Issued Date
2008/11/04
Deciphered Date
2008/11/04
Size Custom
Document Number
LA-4731P Rhett discrete
Rev 0.1
Date: Monday, February 16, 2009
Sheet 9 of 51

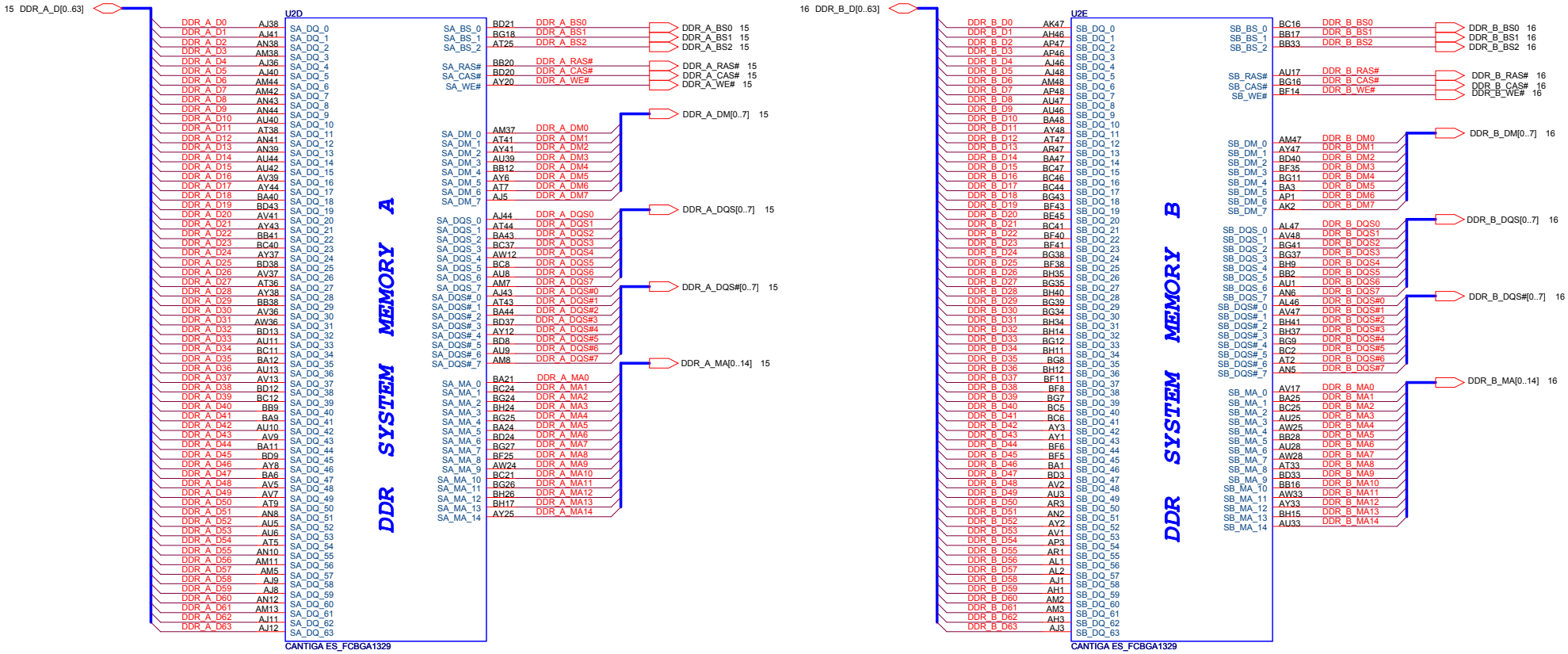


| Security Classification | Compal Secret Data | | |
|---|---|---|---|
| Issued Date | 2008/11/04 | Deciphered Date | 2008/11/04 |

THIS SHEET OF ENGINEERING DRAWING IS THE PROPRIETARY PROPERTY OF COMPAL ELECTRONICS, INC. AND CONTAINS CONFIDENTIAL AND TRADE SECRET INFORMATION. THIS SHEET MAY NOT BE TRANSFERED FROM THE CUSTODY OF THE COMPETENT DIVISION OF R&D DEPARTMENT EXCEPT AS AUTHORIZED BY COMPAL ELECTRONICS, INC. NEITHER THIS SHEET NOR THE INFORMATION IT CONTAINS MAY BE USED BY OR DISCLOSED TO ANY THIRD PARTY WITHOUT PRIOR WRITTEN CONSENT OF COMPAL ELECTRONICS, INC.

**Compal Electronics, Inc.**

Title: **Cantiga(2/6)-DDR2 A/B CH**

Size: Custom | Document Number: LA-4731P Rhett discrete | Rev: 0.1

Date: Monday, February 16, 2009 | Sheet 10 of 51

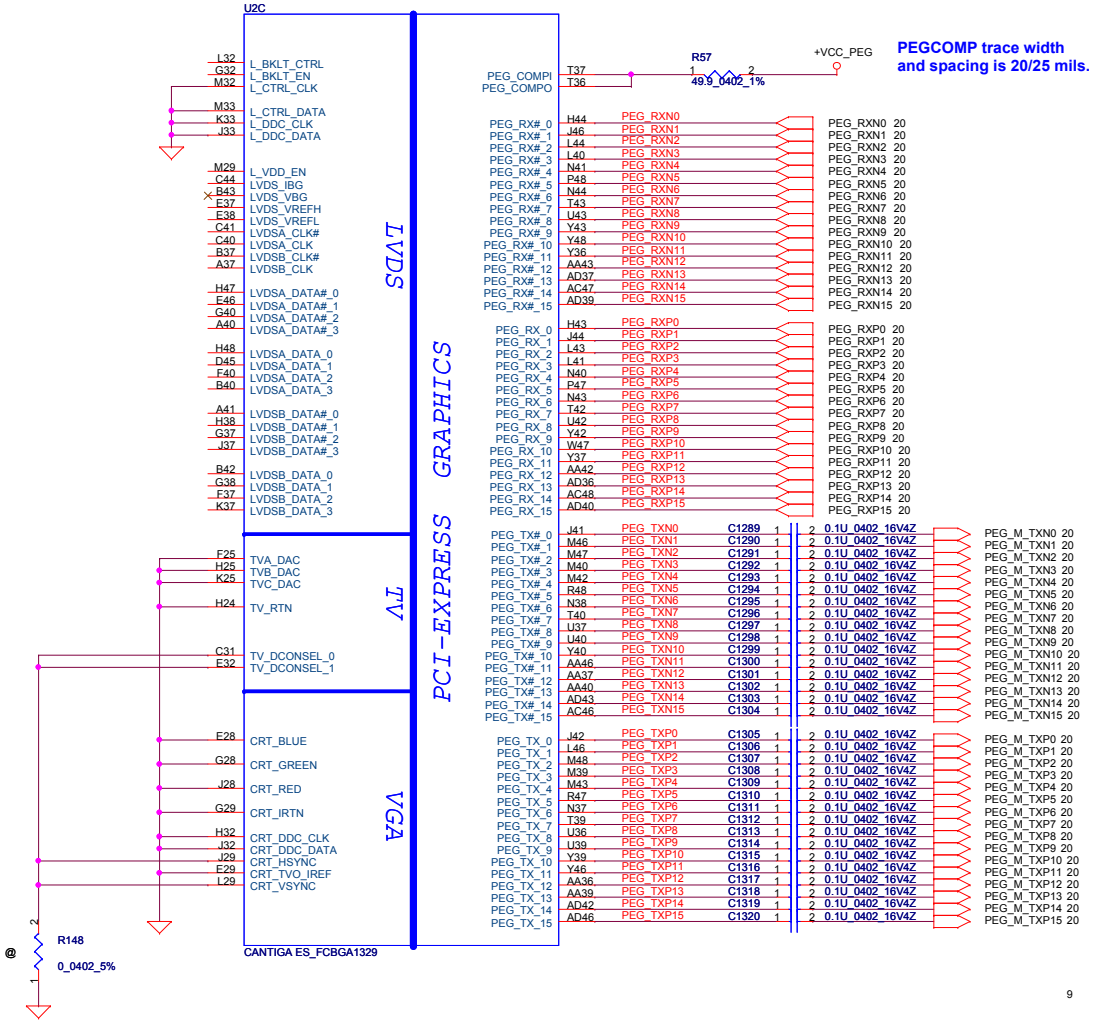


PEGCOMP trace width and spacing is 20/25 mils.

## Strap Pin Table

| | |
|---|---|
| CFG[2:0] FSB Freq select | 000 = FSB 1066MHz<br>010 = FSB 800MHz<br>011 = FSB 667MHz<br>Others = Reserved |
| CFG[4:3] | Reserved |
| CFG5 (DMI select) | 0 = DMI x 2<br>1 = DMI x 4 * |
| CFG6 | 0 = The iTPM Host Interface is enable<br>1 = The iTPM Host Interface is disable * |
| CFG7 (Intel Management Engine Crypto strap) | 0 =(TLS)chiper suite with no confidentiality<br>1 =(TLS)chiper suite with confidentiality * |
| CFG8 | Reserved |
| CFG9 (PCIE Graphics Lane Reversal) | 0 = Reverse Lane,15->0, 14->1<br>1 = Normal Operation,Lane Number in order * |
| CFG10 (PCIE Lookback enable) | 0 = Enable<br>1 = Disable * |
| CFG11 | Reserved |
| CFG[13:12] (XOR/ALLZ) | 00 = Reserved<br>01 = XOR Mode Enabled<br>10 = All Z Mode Enabled<br>11 = Normal Operation (Default) * |
| CFG[15:14] | Reserved |
| CFG16 (FSB Dynamic ODT) | 0 = Disabled<br>1 = Enabled * |
| CFG[18:17] | Reserved |
| CFG19 (DMI Lane Reversal) | 0 = Normal Operation (Lane number in Order) *<br>1 = Reverse Lane |
| CFG20 (PCIE/SDVO concurrent) | 0 = Only PCIE or SDVO is operational. *<br>1 = PCIE/SDVO are operating simu. |

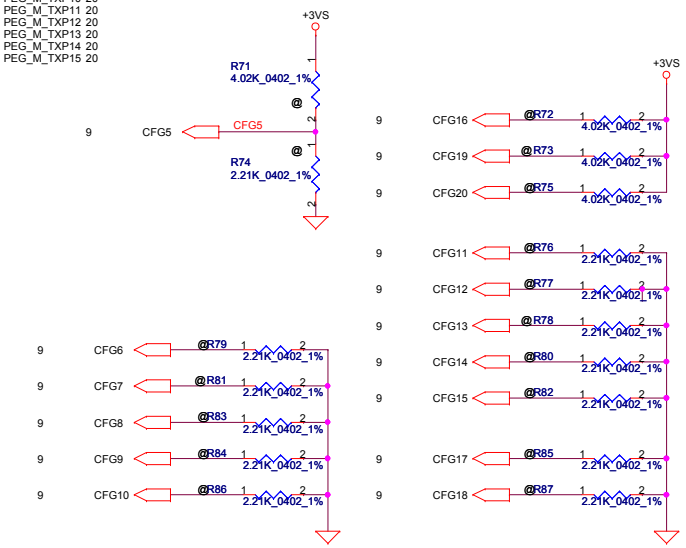


| Security Classification | Compal Secret Data | | |
|---|---|---|---|
| Issued Date | 2008/11/04 | Deciphered Date | 2008/11/04 |

THIS SHEET OF ENGINEERING DRAWING IS THE PROPRIETARY PROPERTY OF COMPAL ELECTRONICS, INC. AND CONTAINS CONFIDENTIAL AND TRADE SECRET INFORMATION. THIS SHEET MAY NOT BE TRANSFERED FROM THE CUSTODY OF THE COMPETENT DIVISION OF R&D DEPARTMENT EXCEPT AS AUTHORIZED BY COMPAL ELECTRONICS, INC. NEITHER THIS SHEET NOR THE INFORMATION IT CONTAINS MAY BE USED BY OR DISCLOSED TO ANY THIRD PARTY WITHOUT PRIOR WRITTEN CONSENT OF COMPAL ELECTRONICS, INC.

**Compal Electronics, Inc.**

Title: Cantiga(3/6)-VGA/LVDS/TV

Size: Custom | Document Number: LA-4731P Rhett discrete | Rev: 0.1

Date: Monday, February 16, 2009 | Sheet 11 of 51

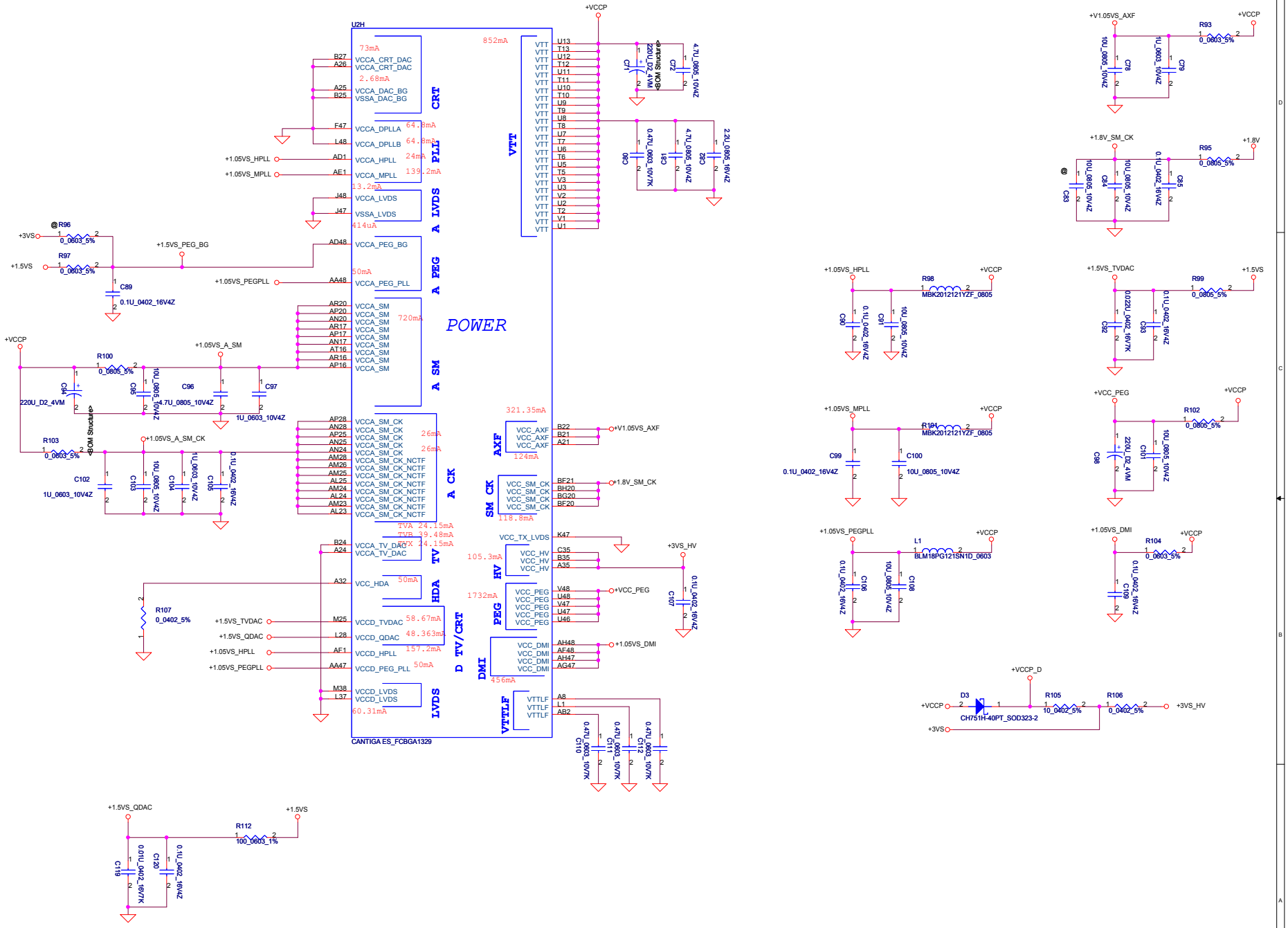


| Security Classification | Compal Secret Data | | |
|---|---|---|---|
| Issued Date | 2008/11/04 | Deciphered Date | 2008/11/04 |

THIS SHEET OF ENGINEERING DRAWING IS THE PROPRIETARY PROPERTY OF COMPAL ELECTRONICS, INC. AND CONTAINS CONFIDENTIAL AND TRADE SECRET INFORMATION. THIS SHEET MAY NOT BE TRANSFERED FROM THE CUSTODY OF THE COMPETENT DIVISION OF R&D DEPARTMENT EXCEPT AS AUTHORIZED BY COMPAL ELECTRONICS, INC. NEITHER THIS SHEET NOR THE INFORMATION IT CONTAINS MAY BE USED BY OR DISCLOSED TO ANY THIRD PARTY WITHOUT PRIOR WRITTEN CONSENT OF COMPAL ELECTRONICS, INC.

**Compal Electronics, Inc.**

Title: **Cantiga(4/6)-PWR**

| Size | Document Number | Rev |
|---|---|---|
| Custom | LA-4731P Rhett discrete | 0.1 |

Date: Thursday, February 12, 2009 | Sheet 12 of 51

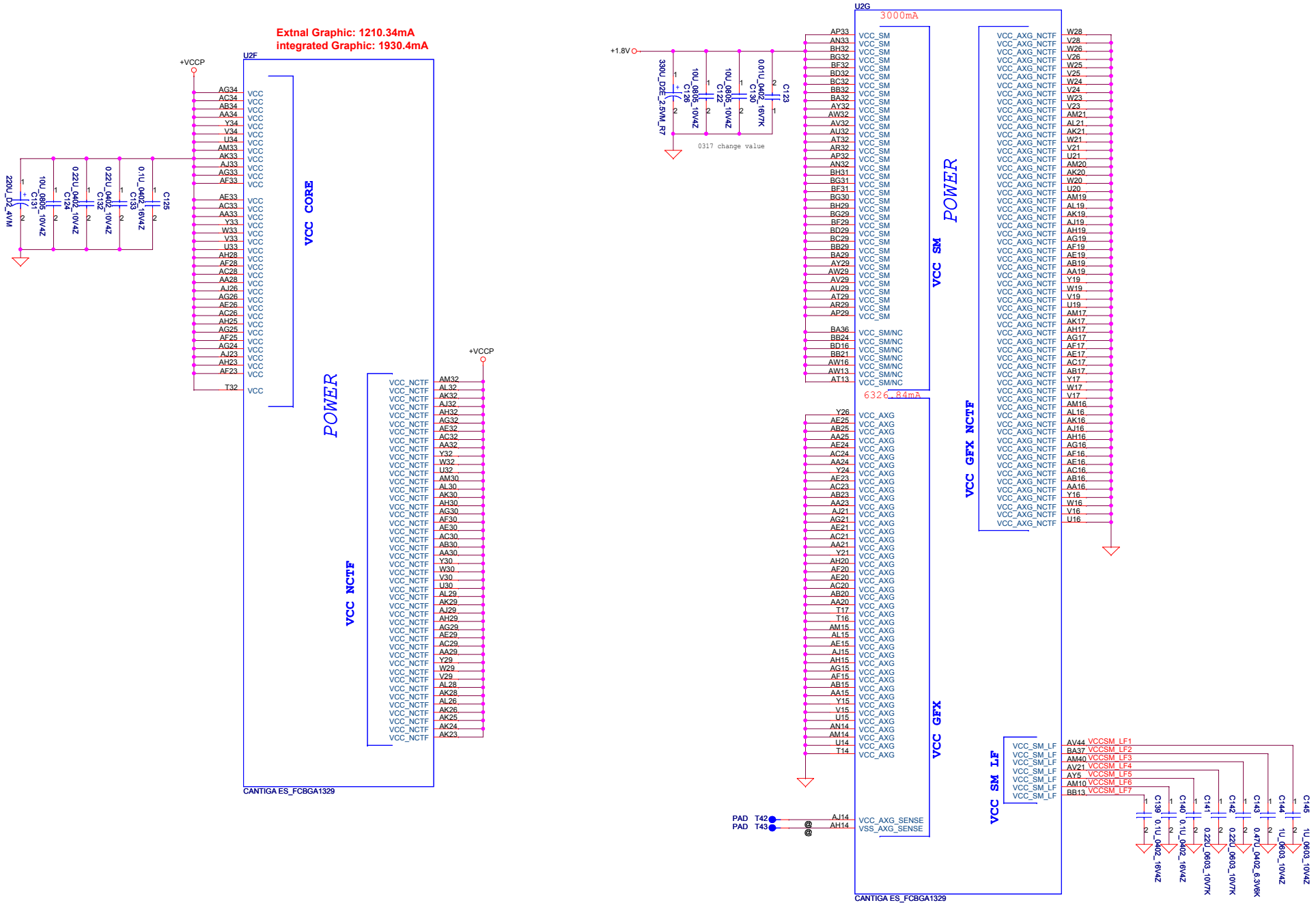


| Security Classification | Compal Secret Data | | |
|---|---|---|---|
| Issued Date | 2008/11/04 | Deciphered Date | 2008/11/04 |

THIS SHEET OF ENGINEERING DRAWING IS THE PROPRIETARY PROPERTY OF COMPAL ELECTRONICS, INC. AND CONTAINS CONFIDENTIAL AND TRADE SECRET INFORMATION. THIS SHEET MAY NOT BE TRANSFERED FROM THE CUSTODY OF THE COMPETENT DIVISION OF R&D DEPARTMENT EXCEPT AS AUTHORIZED BY COMPAL ELECTRONICS, INC. NEITHER THIS SHEET NOR THE INFORMATION IT CONTAINS MAY BE USED BY OR DISCLOSED TO ANY THIRD PARTY WITHOUT PRIOR WRITTEN CONSENT OF COMPAL ELECTRONICS, INC.

**Compal Electronics, Inc.**

Title: **Cantiga(5/6)-PWR/GND**

Size: Custom | Document Number: LA-4731P Rhett discrete | Rev: 0.1

Date: Thursday, February 12, 2009 | Sheet 13 of 51

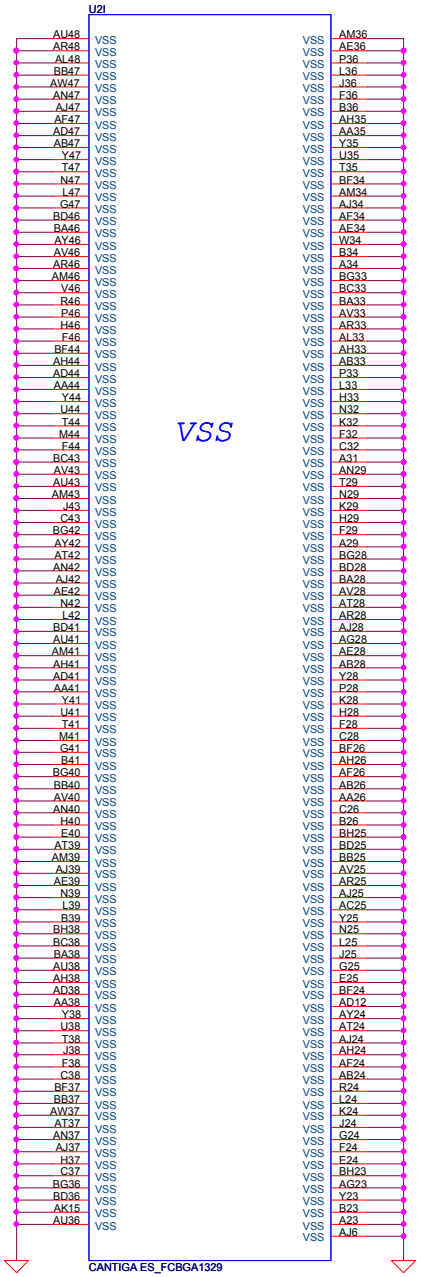


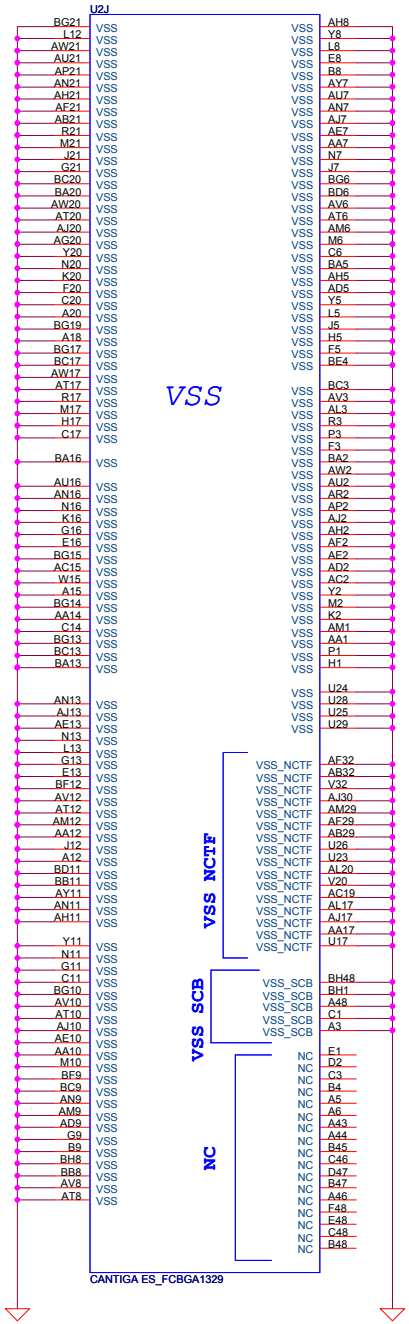


| Security Classification | Compal Secret Data | | |
|---|---|---|---|
| Issued Date | 2008/11/04 | Deciphered Date | 2008/11/04 |

THIS SHEET OF ENGINEERING DRAWING IS THE PROPRIETARY PROPERTY OF COMPAL ELECTRONICS, INC. AND CONTAINS CONFIDENTIAL AND TRADE SECRET INFORMATION. THIS SHEET MAY NOT BE TRANSFERED FROM THE CUSTODY OF THE COMPETENT DIVISION OF R&D DEPARTMENT EXCEPT AS AUTHORIZED BY COMPAL ELECTRONICS, INC. NEITHER THIS SHEET NOR THE INFORMATION IT CONTAINS MAY BE USED BY OR DISCLOSED TO ANY THIRD PARTY WITHOUT PRIOR WRITTEN CONSENT OF COMPAL ELECTRONICS, INC.

**Compal Electronics, Inc.**

Title: **Cantiga(6/6)-PWR/GND**

Size: Custom | Document Number: *LA-4731P Rhett discrete* | Rev: 0.1

Date: Monday, February 16, 2009 | Sheet 14 of 51

10 DDR_A_DQS#[0..7]
10 DDR_A_D[0..63]
10 DDR_A_DM[0..7]
10 DDR_A_DQS[0..7]
10 DDR_A_MA[0..14]

**Layout Note:**
**Place near JP3**

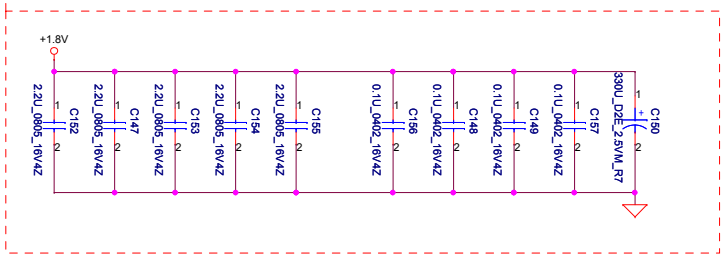


**Layout Note:**
**Place one cap close to every 2 pullup**
**resistors terminated to +0.9VS**

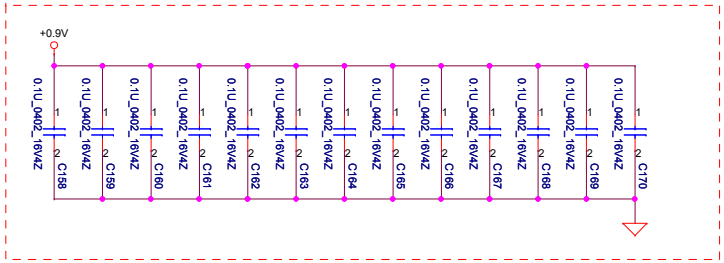


**Layout Note:**
**Place these resistor closely JP3,all trace length Max=1.5"**

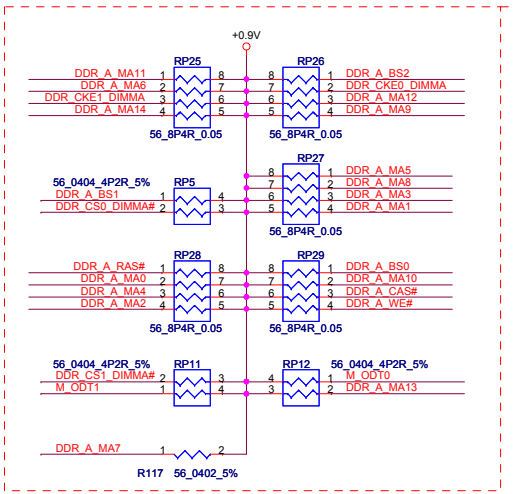


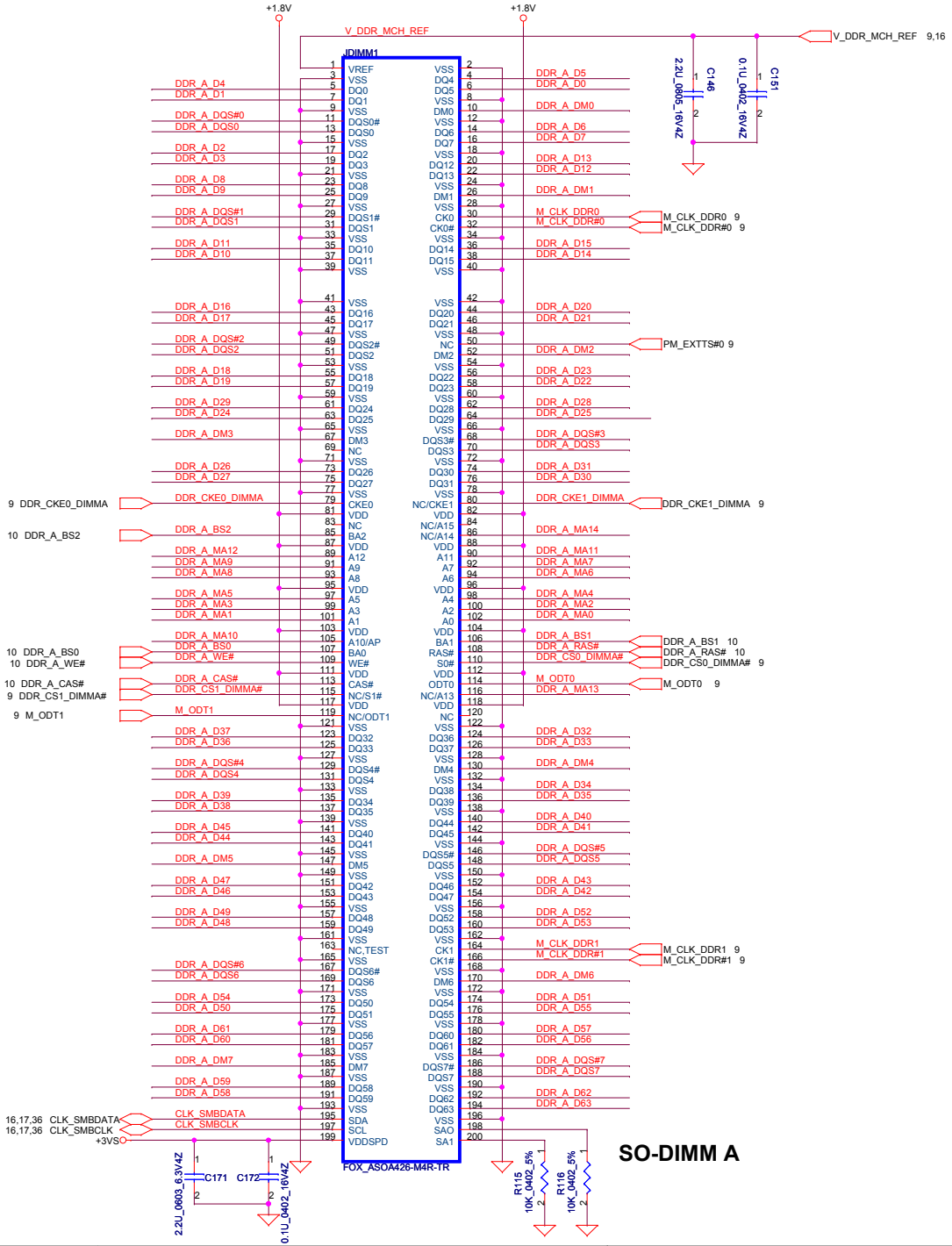


| Security Classification | Compal Secret Data | | |
|---|---|---|---|
| Issued Date | 2008/11/04 | Deciphered Date | 2008/11/04 |

THIS SHEET OF ENGINEERING DRAWING IS THE PROPRIETARY PROPERTY OF COMPAL ELECTRONICS, INC. AND CONTAINS CONFIDENTIAL AND TRADE SECRET INFORMATION. THIS SHEET MAY NOT BE TRANSFERED FROM THE CUSTODY OF THE COMPETENT DIVISION OF R&D DEPARTMENT EXCEPT AS AUTHORIZED BY COMPAL ELECTRONICS, INC. NEITHER THIS SHEET NOR THE INFORMATION IT CONTAINS MAY BE USED BY OR DISCLOSED TO ANY THIRD PARTY WITHOUT PRIOR WRITTEN CONSENT OF COMPAL ELECTRONICS, INC.

**Compal Electronics, Inc.**

Title: **DDRII-SODIMM SLOT1**

Size: Custom | Document Number: LA-4731P Rhett discrete | Rev: 0.1

Date: Monday, February 16, 2009 | Sheet 15 of 51

10 DDR_B_DQS#[0..7]
10 DDR_B_D[0..63]
10 DDR_B_DM[0..7]
10 DDR_B_DQS[0..7]
10 DDR_B_MA[0..14]

**Layout Note:**
**Place near JP10**

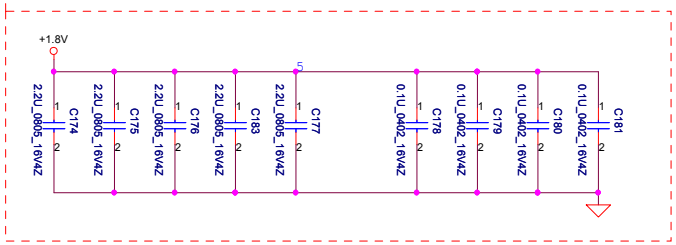


**Layout Note:**
**Place one cap close to every 2 pullup resistors terminated to +0.9VS**

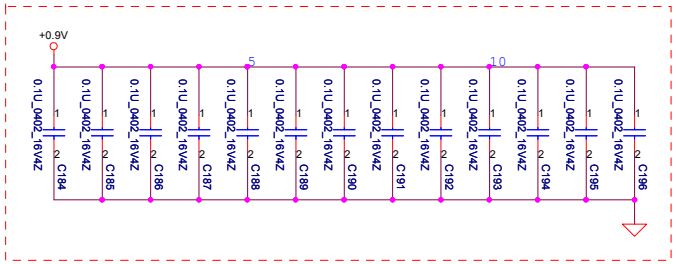


**Layout Note:**
**Place these resistor closely JP3,all trace length Max=1.5"**

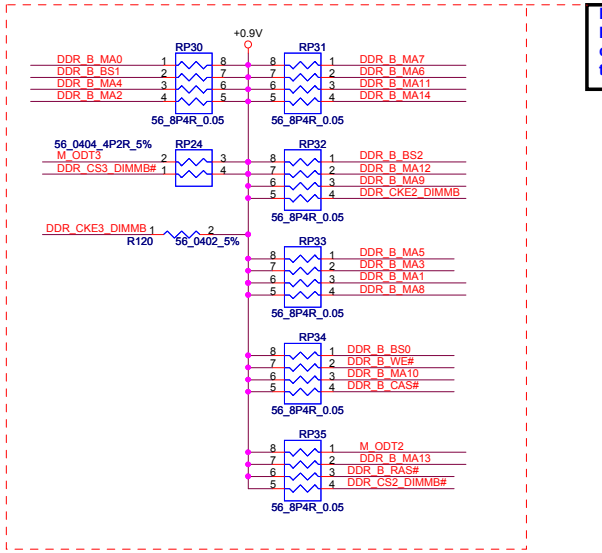


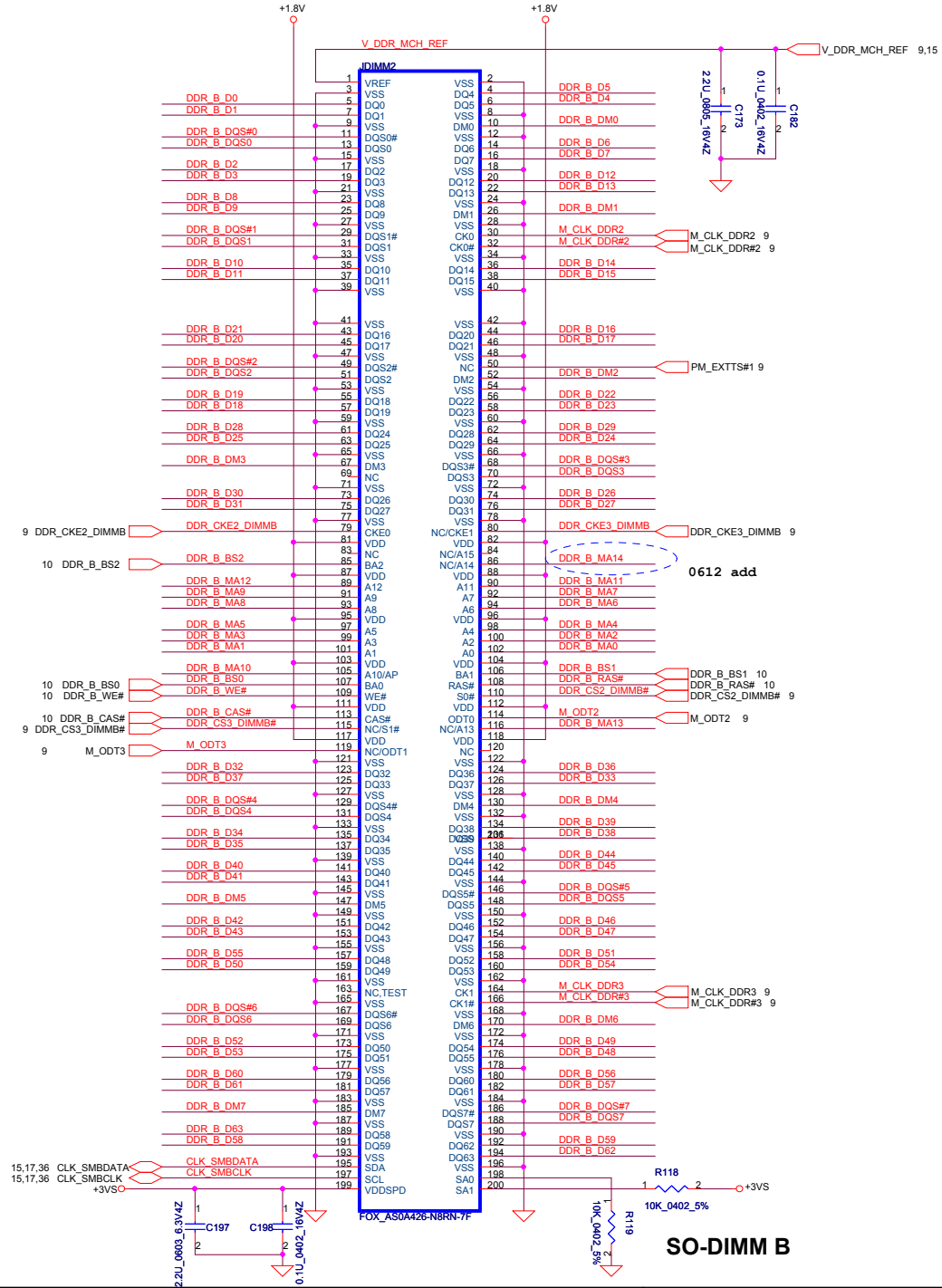


**SO-DIMM B**

| Security Classification | Compal Secret Data | | |
|---|---|---|---|
| Issued Date | 2008/11/04 | Deciphered Date | 2008/11/04 |

THIS SHEET OF ENGINEERING DRAWING IS THE PROPRIETARY PROPERTY OF COMPAL ELECTRONICS, INC. AND CONTAINS CONFIDENTIAL AND TRADE SECRET INFORMATION. THIS SHEET MAY NOT BE TRANSFERED FROM THE CUSTODY OF THE COMPETENT DIVISION OF R&D DEPARTMENT EXCEPT AS AUTHORIZED BY COMPAL ELECTRONICS, INC. NEITHER THIS SHEET NOR THE INFORMATION IT CONTAINS MAY BE USED BY OR DISCLOSED TO ANY THIRD PARTY WITHOUT PRIOR WRITTEN CONSENT OF COMPAL ELECTRONICS, INC.

**Compal Electronics, Inc.**

Title: **DDRII-SODIMM SLOT2**

Size | Document Number: *LA-4731P Rhett discrete* | Rev: 0.1

Date: Monday, February 16, 2009 | Sheet 16 of 51

| FSC CLKSEL2 | FSB CLKSEL1 | FSA CLKSEL0 | CPU MHz | SRC MHz | PCI MHz | REF MHz | DOT_96 MHz | USB MHz |
|---|---|---|---|---|---|---|---|---|
| 0 | 0 | 0 | 266 | 100 | 33.3 | 14.318 | 96.0 | 48.0 |
| 0 | 0 | 1 | 133 | 100 | 33.3 | 14.318 | 96.0 | 48.0 |
| 0 | 1 | 0 | 200 | 100 | 33.3 | 14.318 | 96.0 | 48.0 |
| 0 | 1 | 1 | 166 | 100 | 33.3 | 14.318 | 96.0 | 48.0 |
| 1 | 0 | 0 | 333 | 100 | 33.3 | 14.318 | 96.0 | 48.0 |
| 1 | 0 | 1 | 100 | 100 | 33.3 | 14.318 | 96.0 | 48.0 |
| 1 | 1 | 0 | 400 | 100 | 33.3 | 14.318 | 96.0 | 48.0 |
| 1 | 1 | 1 | Reserved | | | | | |

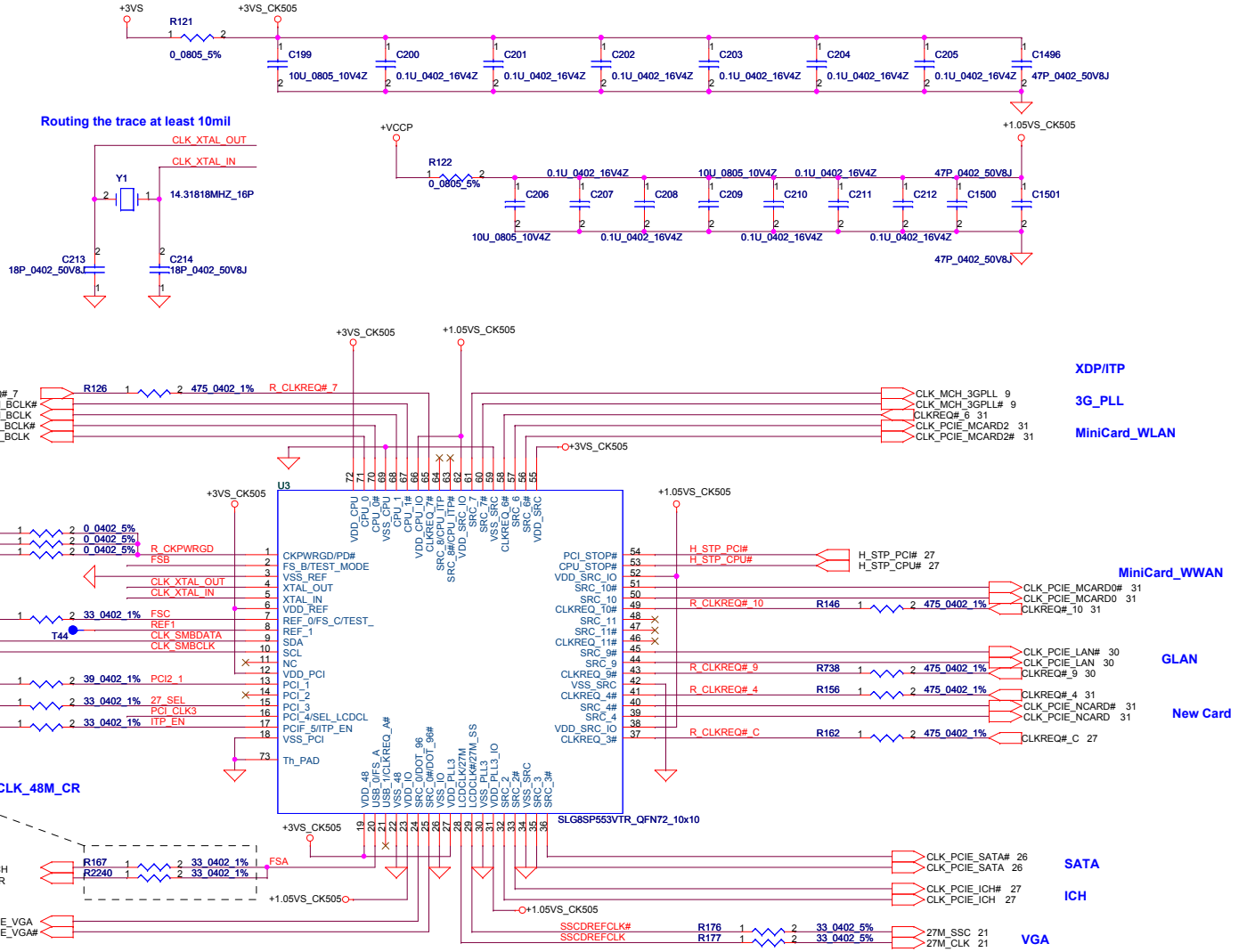


| | | |
|---|---|---|
| ITP_EN | 0 = SRC8/SRC8#<br>1 = ITP/ITP# | V |
| PCI_CLK3 | 0 = Enable DOT96 & SRC1(UMA)<br>1 = Enable SRC0 & 27MHz(DIS) | V |

| | | | |
|---|---|---|---|
| Security Classification | Compal Secret Data | | |
| Issued Date | 2008/11/04 | Deciphered Date | 2008/11/04 |

THIS SHEET OF ENGINEERING DRAWING IS THE PROPRIETARY PROPERTY OF COMPAL ELECTRONICS, INC. AND CONTAINS CONFIDENTIAL AND TRADE SECRET INFORMATION. THIS SHEET MAY NOT BE TRANSFERED FROM THE CUSTODY OF THE COMPETENT DIVISION OF R&D DEPARTMENT EXCEPT AS AUTHORIZED BY COMPAL ELECTRONICS, INC. NEITHER THIS SHEET NOR THE INFORMATION IT CONTAINS MAY BE USED BY OR DISCLOSED TO ANY THIRD PARTY WITHOUT PRIOR WRITTEN CONSENT OF COMPAL ELECTRONICS, INC.

Compal Electronics, Inc.

Title: Clock Generator CK505

Size | Document Number: LA-4731P Rhett discrete | Rev 0.1

Date: Monday, February 16, 2009 | Sheet 17 of 51

# CRT Connector

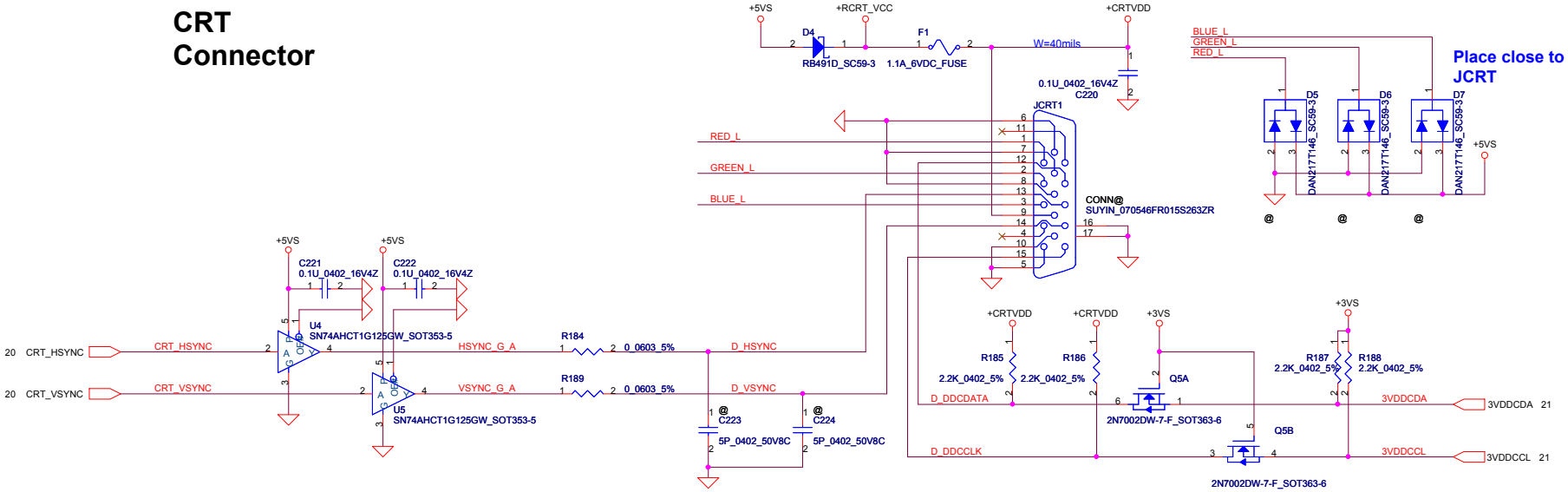


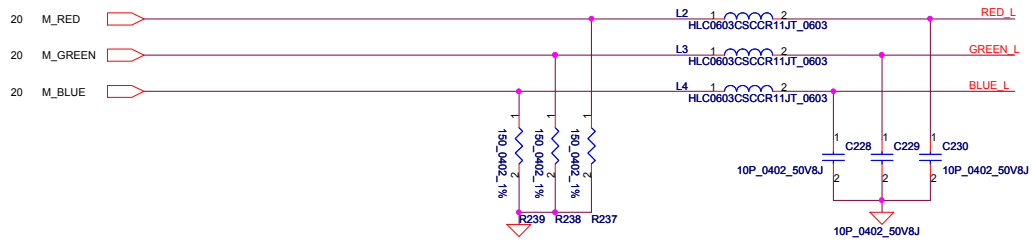


| Security Classification | Compal Secret Data | | |
|---|---|---|---|
| Issued Date | 2008/11/04 | Deciphered Date | 2008/11/04 |

THIS SHEET OF ENGINEERING DRAWING IS THE PROPRIETARY PROPERTY OF COMPAL ELECTRONICS, INC. AND CONTAINS CONFIDENTIAL AND TRADE SECRET INFORMATION. THIS SHEET MAY NOT BE TRANSFERED FROM THE CUSTODY OF THE COMPETENT DIVISION OF R&D DEPARTMENT EXCEPT AS AUTHORIZED BY COMPAL ELECTRONICS, INC. NEITHER THIS SHEET NOR THE INFORMATION IT CONTAINS MAY BE USED BY OR DISCLOSED TO ANY THIRD PARTY WITHOUT PRIOR WRITTEN CONSENT OF COMPAL ELECTRONICS, INC.

**Compal Electronics, Inc.**

Title: **CRT Connector**

Size: | Document Number: *LA-4731P Rhett discrete* | Rev: 0.1

Date: Monday, February 16, 2009 | Sheet 18 of 51

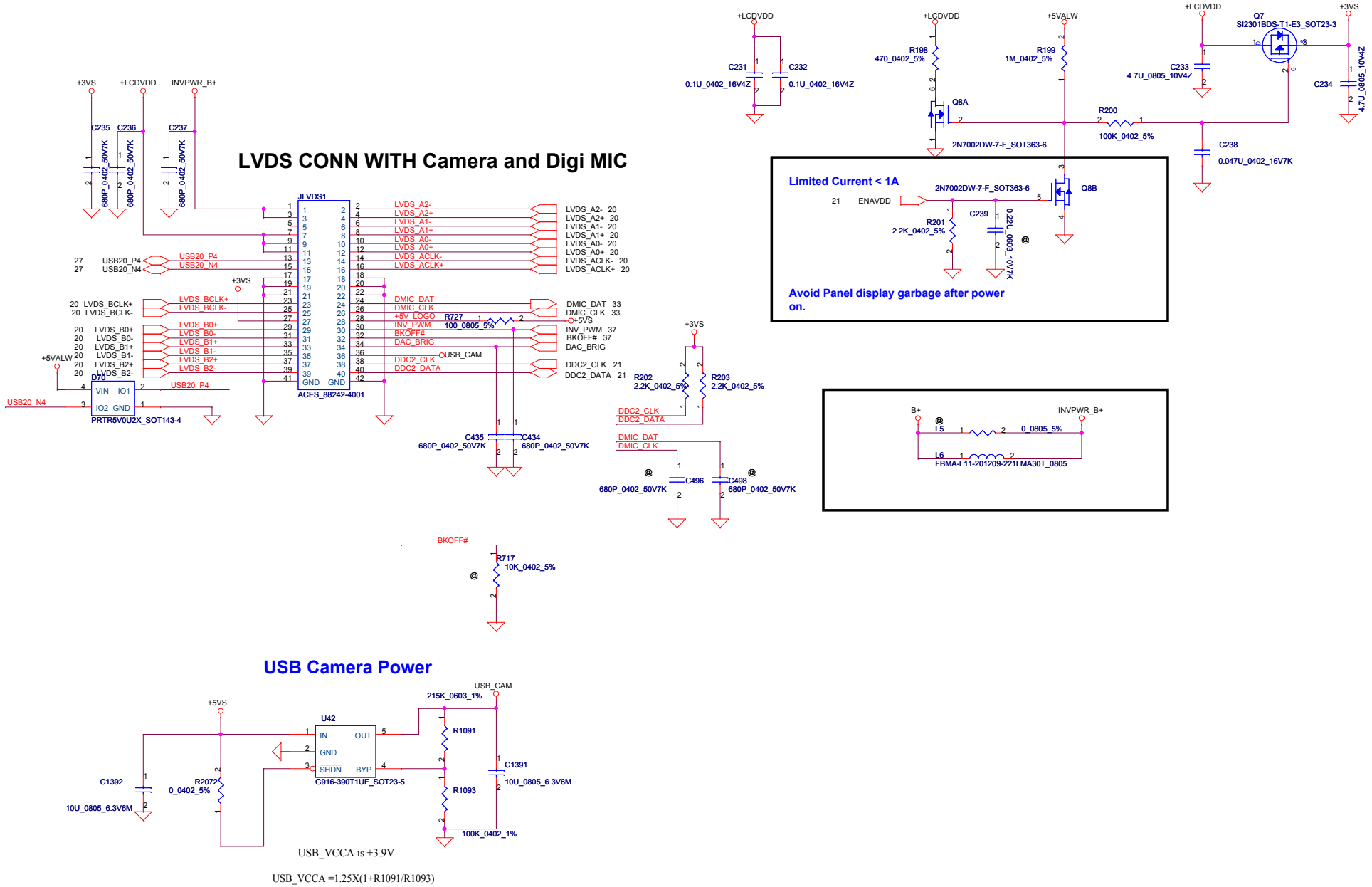


## USB Camera Power




USB_VCCA is +3.9V

USB_VCCA =1.25X(1+R1091/R1093)

| Security Classification | Compal Secret Data | | | Compal Electronics, Inc. |
|---|---|---|---|---|
| Issued Date | 2008/11/04 | Deciphered Date | 2008/11/04 | Title: LCD CONN. |
| | | | | Size: Document Number: LA-4731P Rhett discrete; Rev: 0.1 |
| | | | | Date: Monday, February 16, 2009; Sheet 19 of 51 |

THIS SHEET OF ENGINEERING DRAWING IS THE PROPRIETARY PROPERTY OF COMPAL ELECTRONICS, INC. AND CONTAINS CONFIDENTIAL AND TRADE SECRET INFORMATION. THIS SHEET MAY NOT BE TRANSFERED FROM THE CUSTODY OF THE COMPETENT DIVISION OF R&D DEPARTMENT EXCEPT AS AUTHORIZED BY COMPAL ELECTRONICS, INC. NEITHER THIS SHEET NOR THE INFORMATION IT CONTAINS MAY BE USED BY OR DISCLOSED TO ANY THIRD PARTY WITHOUT PRIOR WRITTEN CONSENT OF COMPAL ELECTRONICS, INC.

# LVDS & DAC Interface

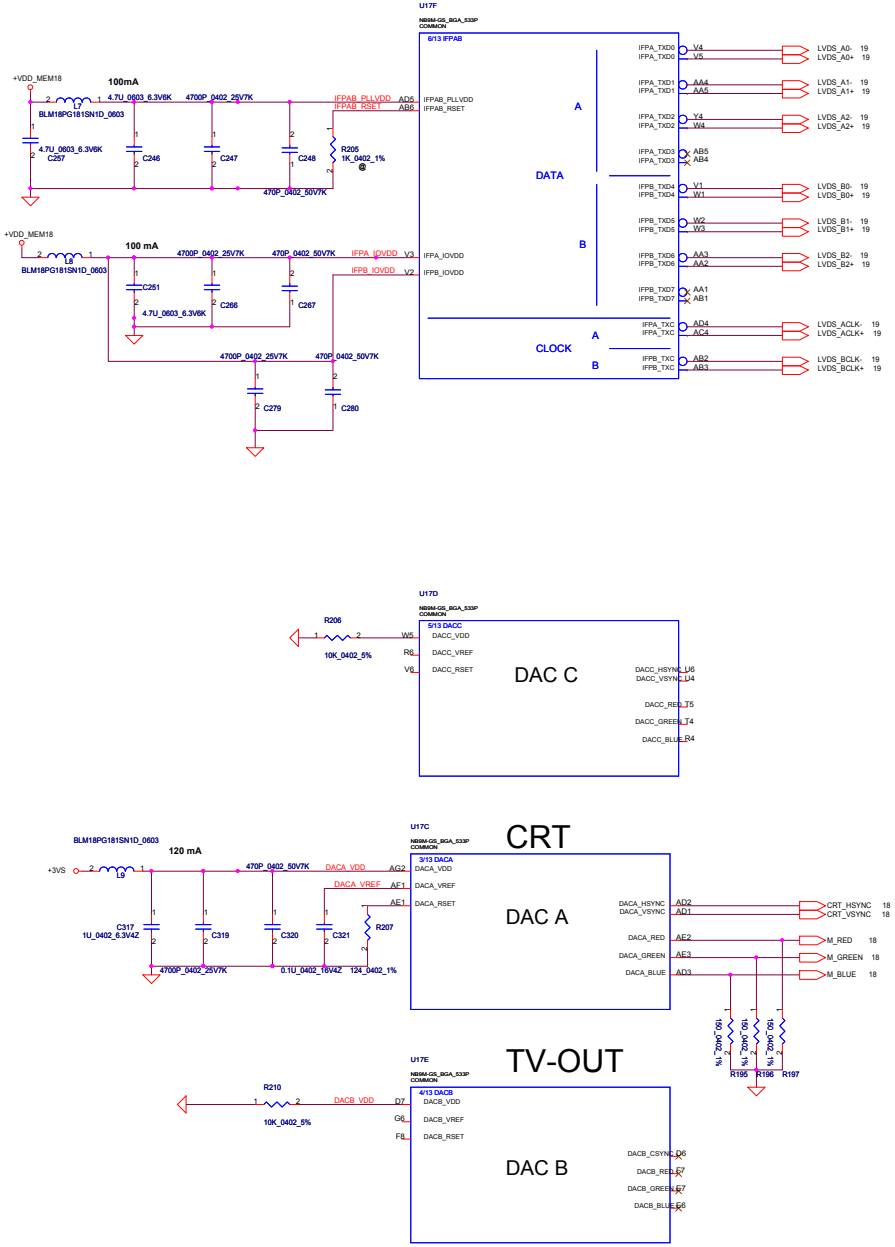


# PEG Interface

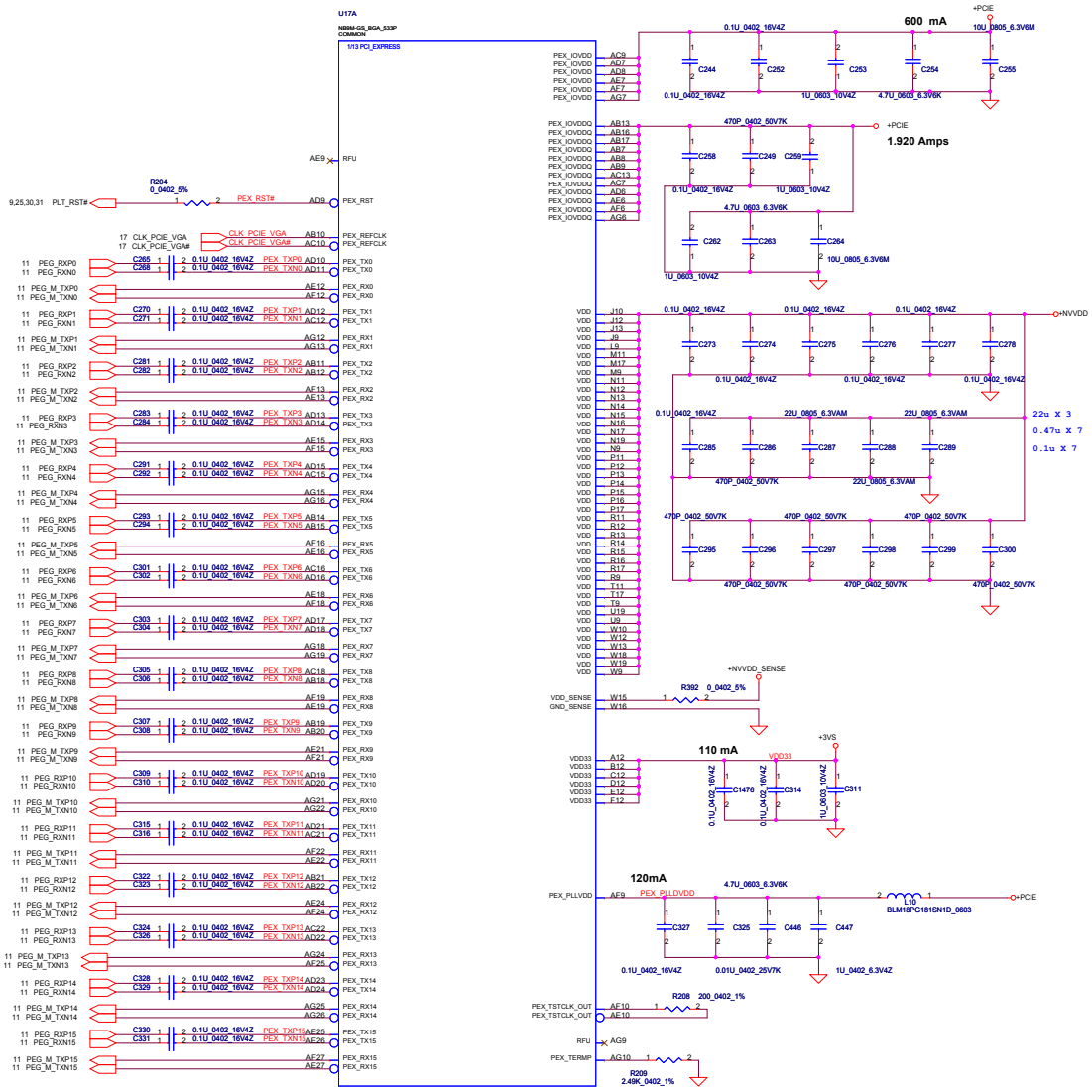


| Security Classification | Compal Secret Data | | |
|---|---|---|---|
| Issued Date | 2008/11/04 | Deciphered Date | 2008/11/04 |

THIS SHEET OF ENGINEERING DRAWING IS THE PROPRIETARY PROPERTY OF COMPAL ELECTRONICS, INC. AND CONTAINS CONFIDENTIAL AND TRADE SECRET INFORMATION. THIS SHEET MAY NOT BE TRANSFERED FROM THE CUSTODY OF THE COMPETENT DIVISION OF R&D DEPARTMENT EXCEPT AS AUTHORIZED BY COMPAL ELECTRONICS, INC. NEITHER THIS SHEET NOR THE INFORMATION IT CONTAINS MAY BE USED BY OR DISCLOSED TO ANY THIRD PARTY WITHOUT PRIOR WRITTEN CONSENT OF COMPAL ELECTRONICS, INC.

**Compal Electronics, Inc.**

Title: **PEG & LVDS & DAC**

| Size | Document Number | Rev |
|---|---|---|
| Custom | LA-4731P Rhett discrete | 0.1 |

Date: Monday, February 16, 2009 | Sheet 20 of 51

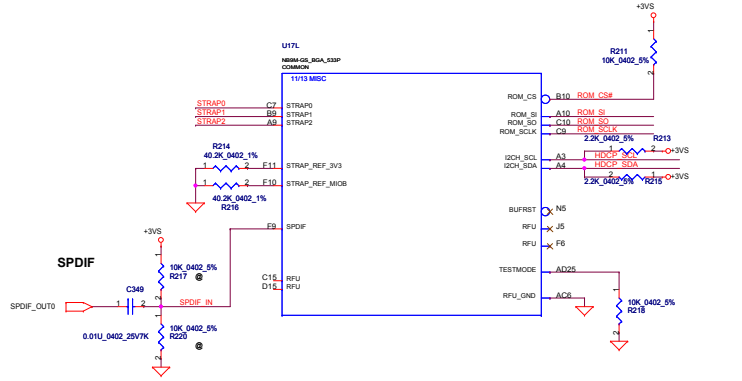


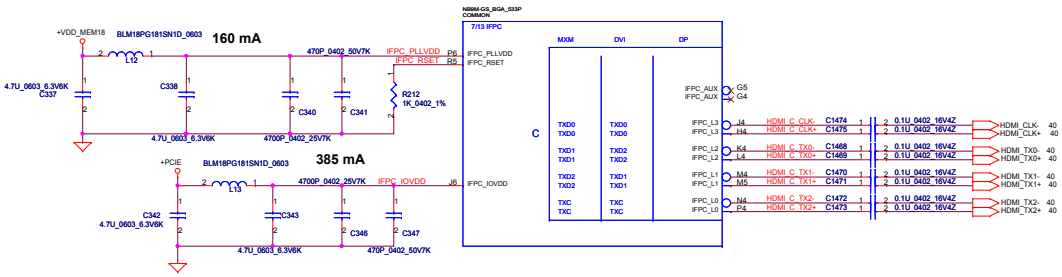


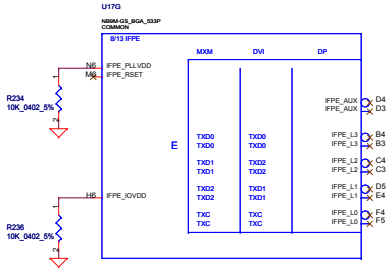


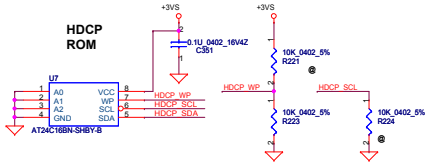


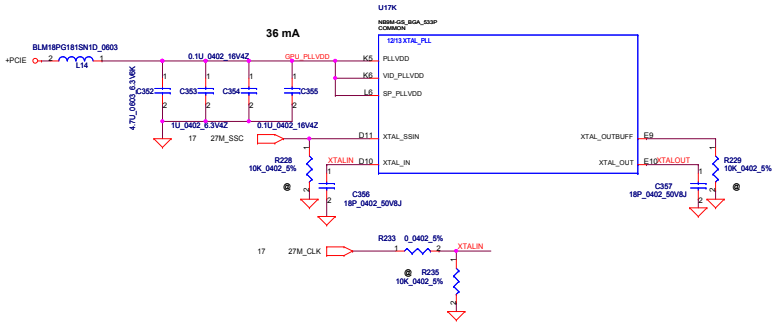

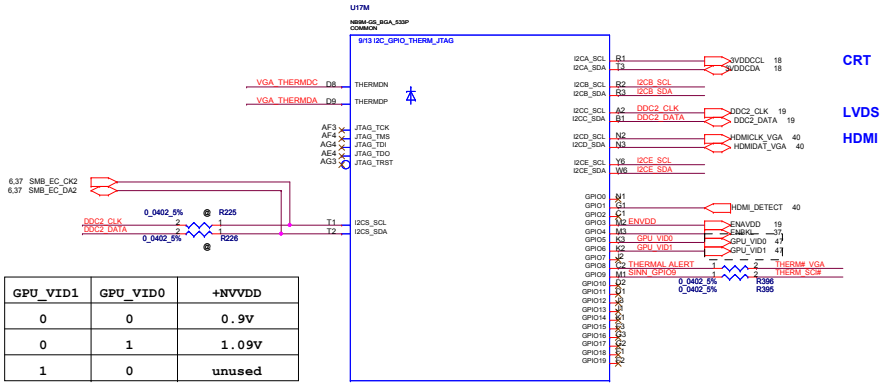


| GPIO | I/O | ACTIVE | USAGE |
|---|---|---|---|
| GPIO0 | IN | N/A | Primary DVI Hot-plug |
| GPIO1 | IN | N/A | 2nd DVI Hot-plug |
| GPIO2 | OUT | H | Panel Back-Light PWM |
| GPIO3 | OUT | H | Panel Power Enable |
| GPIO4 | OUT | H | Panel Back-Light Enable |
| GPIO5 | OUT | N/A | NVVDD VID0 |
| GPIO6 | OUT | N/A | NVVDD VID1 |
| GPIO7 | OUT | N/A | FBVDD VID0 |
| GPIO8 | IN | L | Thermal Alert |
| GPIO9 | OUT | L | FAN PWM |
| GPIO10 | OUT | N/A | FBVref Select |
| GPIO11 | OUT | N/A | SLI SYNCO |
| GPIO12 | IN | N/A | AC Detect |
| GPIO13 | OUT | L | PS Control or HDMI_CEC |
| GPIO14 | OUT | H | PS Control |

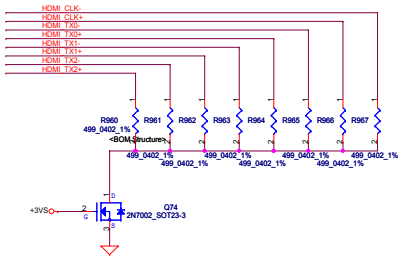


| GPU_VID1 | GPU_VID0 | +NVVDD |
|---|---|---|
| 0 | 0 | 0.9V |
| 0 | 1 | 1.09V |
| 1 | 0 | unused |

# Straps

## MULTI LEVEL STRAPS

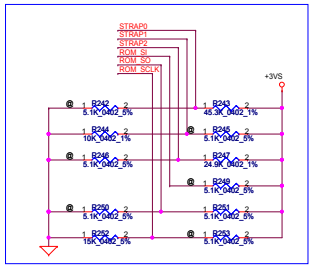


## VRAM VENDOR STRAPS

| | R248 | R264 | R265 |
|---|---|---|---|
| 64MX16 Hynix | 5 Kohms | | |
| 64MX16 Qimonda | | 15 Kohms | |
| 64MX16 Samsung | | | 10 Kohms |

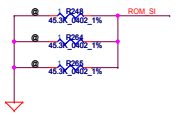


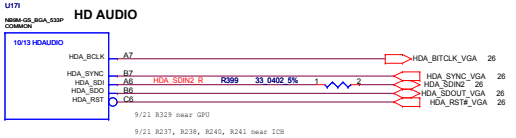


| Security Classification | Compal Secret Data | | |
|---|---|---|---|
| Issued Date | 2008/11/04 | Deciphered Date | 2008/11/04 |

THIS SHEET OF ENGINEERING DRAWING IS THE PROPRIETARY PROPERTY OF COMPAL ELECTRONICS, INC. AND CONTAINS CONFIDENTIAL AND TRADE SECRET INFORMATION. THIS SHEET MAY NOT BE TRANSFERED FROM THE CUSTODY OF THE COMPETENT DIVISION OF R&D DEPARTMENT EXCEPT AS AUTHORIZED BY COMPAL ELECTRONICS, INC. NEITHER THIS SHEET NOR THE INFORMATION IT CONTAINS MAY BE USED BY OR DISCLOSED TO ANY THIRD PARTY WITHOUT PRIOR WRITTEN CONSENT OF COMPAL ELECTRONICS, INC.

Compal Electronics, Inc.

Title: Straps & HDMI

Size: Custom | Document Number: LA-4731P Rhett discrete | Rev: 0.1

Date: Monday, February 16, 2009 | Sheet 21 of 51

# VRAM Interface

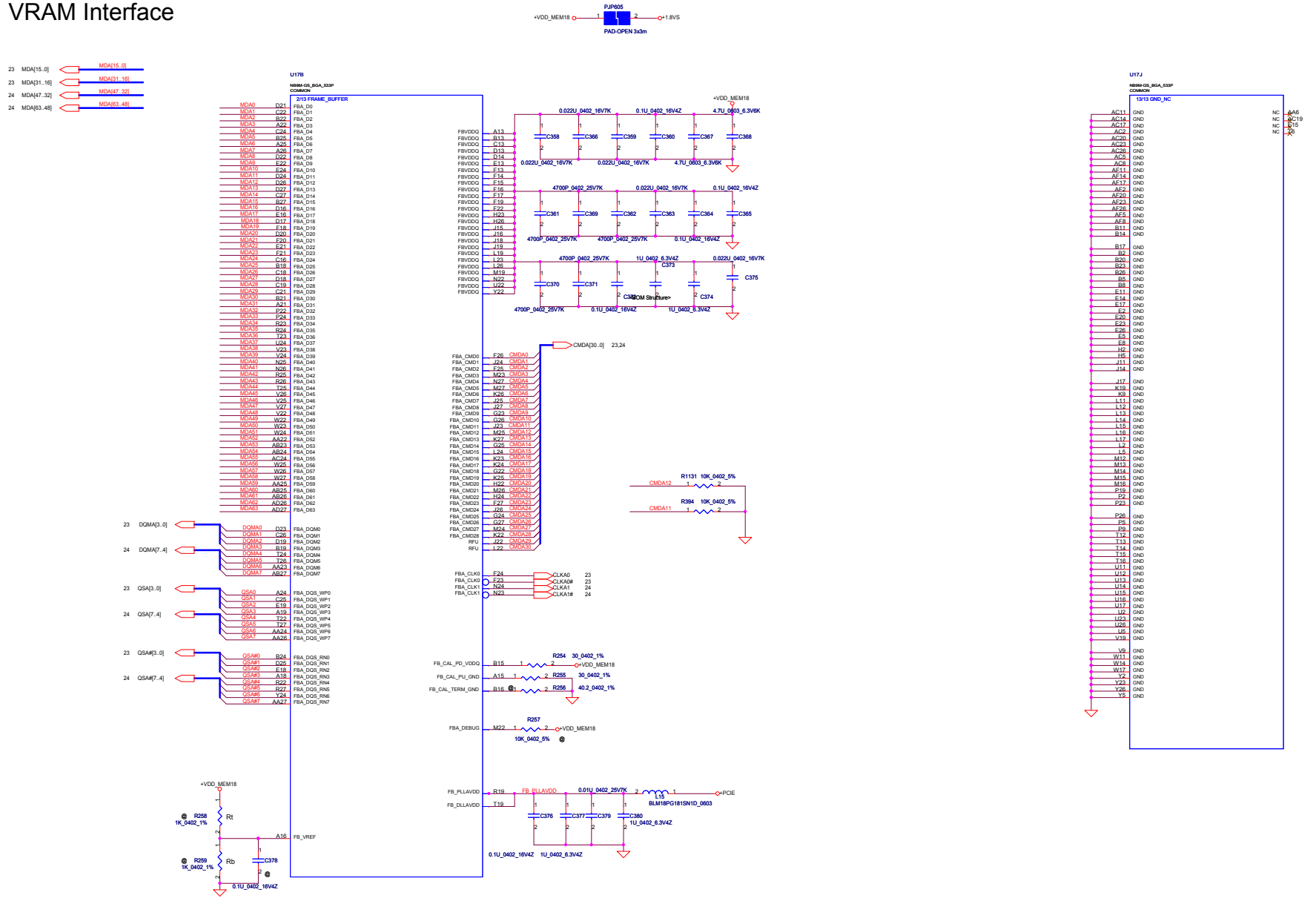


| Security Classification | Compal Secret Data | | |
|---|---|---|---|
| Issued Date | 2008/11/04 | Deciphered Date | 2008/11/04 |

THIS SHEET OF ENGINEERING DRAWING IS THE PROPRIETARY PROPERTY OF COMPAL ELECTRONICS, INC. AND CONTAINS CONFIDENTIAL AND TRADE SECRET INFORMATION. THIS SHEET MAY NOT BE TRANSFERED FROM THE CUSTODY OF THE COMPETENT DIVISION OF R&D DEPARTMENT EXCEPT AS AUTHORIZED BY COMPAL ELECTRONICS, INC. NEITHER THIS SHEET NOR THE INFORMATION IT CONTAINS MAY BE USED BY OR DISCLOSED TO ANY THIRD PARTY WITHOUT PRIOR WRITTEN CONSENT OF COMPAL ELECTRONICS, INC.

**Compal Electronics, Inc.**

Title: **VRAM / GND**

Size: Custom | Document Number: LA-4731P Rhett discrete | Rev: 0.1

Date: Monday, February 16, 2009 | Sheet 22 of 51

# VRAM DDR2 chips (256MB & 512MB)

## 32Mx16 DDR2 400MHz *4==>256MB
## 64Mx16 DDR2 400MHz*4==>512MB

| | DATA Bus | |
|---|---|---|
| Address | 0..31 | 32..63 |
| CMD0 | A3 | |
| CMD1 | A0 | A0 |
| CMD2 | A2 | |
| CMD3 | A1 | A1 |
| CMD4 | | A3 |
| CMD5 | | A4 |
| CMD6 | | A5 |
| CMD7 | | |
| CMD8 | CS# | CS# |
| CMD9 | WE# | WE# |
| CMD10 | BA0 | BA0 |
| CMD11 | CKE | CKE |
| CMD12 | ODT | ODT |
| CMD13 | | |
| CMD14 | A12 | A12 |
| CMD15 | RAS# | RAS# |
| CMD16 | A11 | A11 |
| CMD17 | A10 | A10 |
| CMD18 | BA1 | BA1 |
| CMD19 | A8 | A8 |
| CMD20 | A9 | A9 |
| CMD21 | A6 | A6 |
| CMD22 | A5 | |
| CMD23 | A7 | A7 |
| CMD24 | A4 | |
| CMD25 | CAS# | CAS# |
| CMD26 | A13 | A13 |
| CMD27 | BA2 | BA2 |
| CMD28 | | |
| CMD29 | | |
| CMD30 | | |

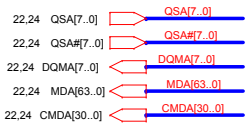


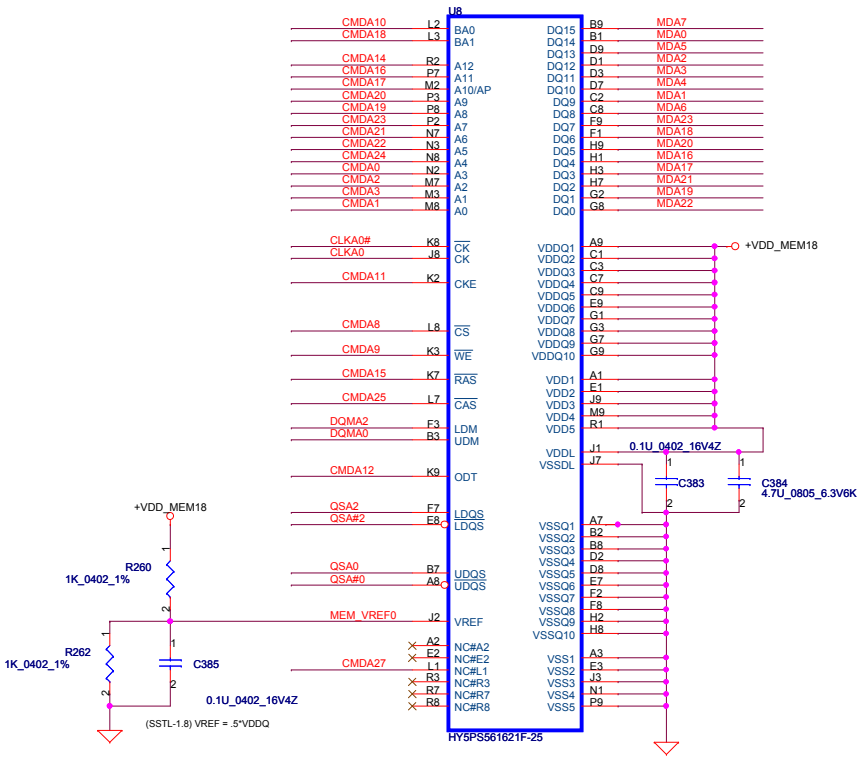


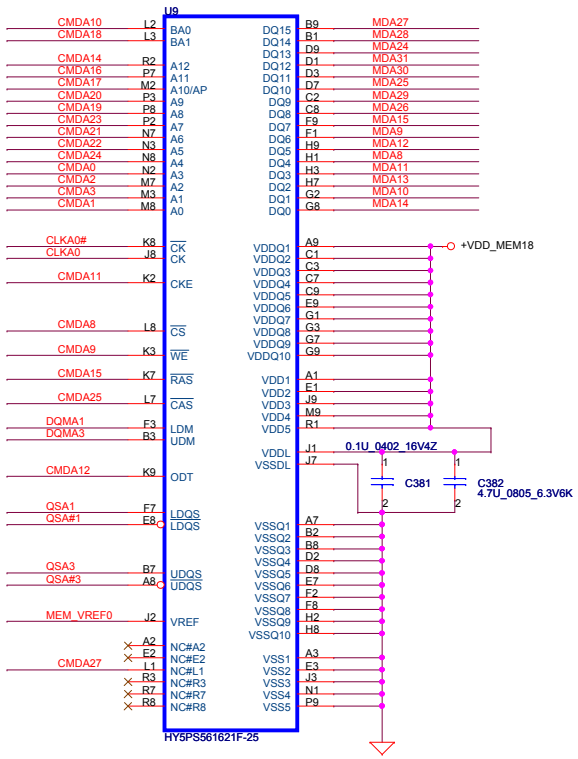


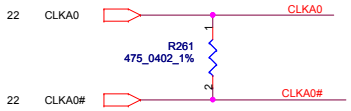


### DDR2 BGA MEMORY

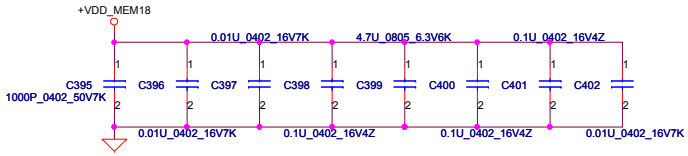


### DDR BGA MEMORY

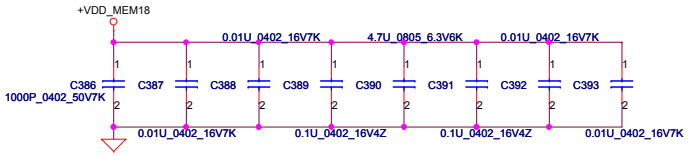


| Security Classification | Compal Secret Data | | |
|---|---|---|---|
| Issued Date | 2008/11/04 | Deciphered Date | 2008/11/04 |

THIS SHEET OF ENGINEERING DRAWING IS THE PROPRIETARY PROPERTY OF COMPAL ELECTRONICS, INC. AND CONTAINS CONFIDENTIAL AND TRADE SECRET INFORMATION. THIS SHEET MAY NOT BE TRANSFERED FROM THE CUSTODY OF THE COMPETENT DIVISION OF R&D DEPARTMENT EXCEPT AS AUTHORIZED BY COMPAL ELECTRONICS, INC. NEITHER THIS SHEET NOR THE INFORMATION IT CONTAINS MAY BE USED BY OR DISCLOSED TO ANY THIRD PARTY WITHOUT PRIOR WRITTEN CONSENT OF COMPAL ELECTRONICS, INC.

**Compal Electronics, Inc.**

Title: CHANNEL A EXT. 256M_1

Size: | Document Number: CHANNEL A EXT. 256M_1 | Rev: 0.1

Date: Monday, February 16, 2009 | Sheet 7 of 16

# VRAM DDR2 chips (256MB & 512MB)

## 32Mx16 DDR2 400MHz *4==>256MB

## 64Mx16 DDR2 400MHz*4==>512MB

| | DATA Bus | |
|---|---|---|
| Address | 0..31 | 32..63 |
| CMD0 | A3 | |
| CMD1 | A0 | A0 |
| CMD2 | A2 | |
| CMD3 | A1 | A1 |
| CMD4 | | A3 |
| CMD5 | | A4 |
| CMD6 | | A5 |
| CMD7 | | |
| CMD8 | CS# | CS# |
| CMD9 | WE# | WE# |
| CMD10 | BA0 | BA0 |
| CMD11 | CKE | CKE |
| CMD12 | ODT | ODT |
| CMD13 | | |
| CMD14 | A12 | A12 |
| CMD15 | RAS# | RAS# |
| CMD16 | A11 | A11 |
| CMD17 | A10 | A10 |
| CMD18 | BA1 | BA1 |
| CMD19 | A8 | A8 |
| CMD20 | A9 | A9 |
| CMD21 | A6 | A6 |
| CMD22 | A5 | |
| CMD23 | A7 | A7 |
| CMD24 | A4 | |
| CMD25 | CAS# | CAS# |
| CMD26 | A13 | A13 |
| CMD27 | BA2 | BA2 |
| CMD28 | | |
| CMD29 | | |
| CMD30 | | |

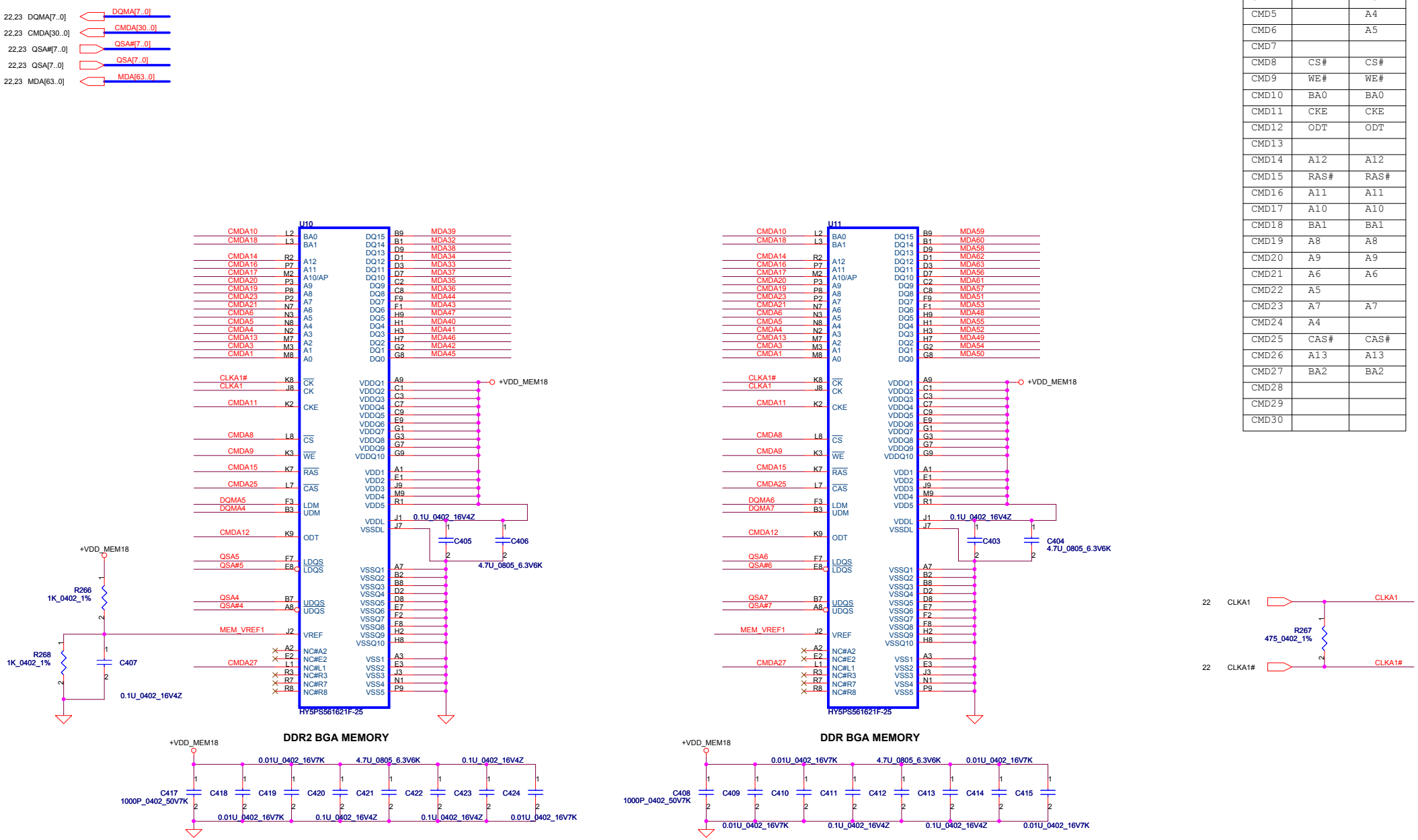


| Security Classification | Compal Secret Data | | |
|---|---|---|---|
| Issued Date | 2008/11/04 | Deciphered Date | 2008/11/04 |

THIS SHEET OF ENGINEERING DRAWING IS THE PROPRIETARY PROPERTY OF COMPAL ELECTRONICS, INC. AND CONTAINS CONFIDENTIAL AND TRADE SECRET INFORMATION. THIS SHEET MAY NOT BE TRANSFERED FROM THE CUSTODY OF THE COMPETENT DIVISION OF R&D DEPARTMENT EXCEPT AS AUTHORIZED BY COMPAL ELECTRONICS, INC. NEITHER THIS SHEET NOR THE INFORMATION IT CONTAINS MAY BE USED BY OR DISCLOSED TO ANY THIRD PARTY WITHOUT PRIOR WRITTEN CONSENT OF COMPAL ELECTRONICS, INC.

**Compal Electronics, Inc.**

Title: CHANNEL A EXT. 256M_2

Size | Document Number: CHANNEL A EXT. 256M_2 | Rev 0.1

Date: Monday, February 16, 2009 | Sheet 8 of 16

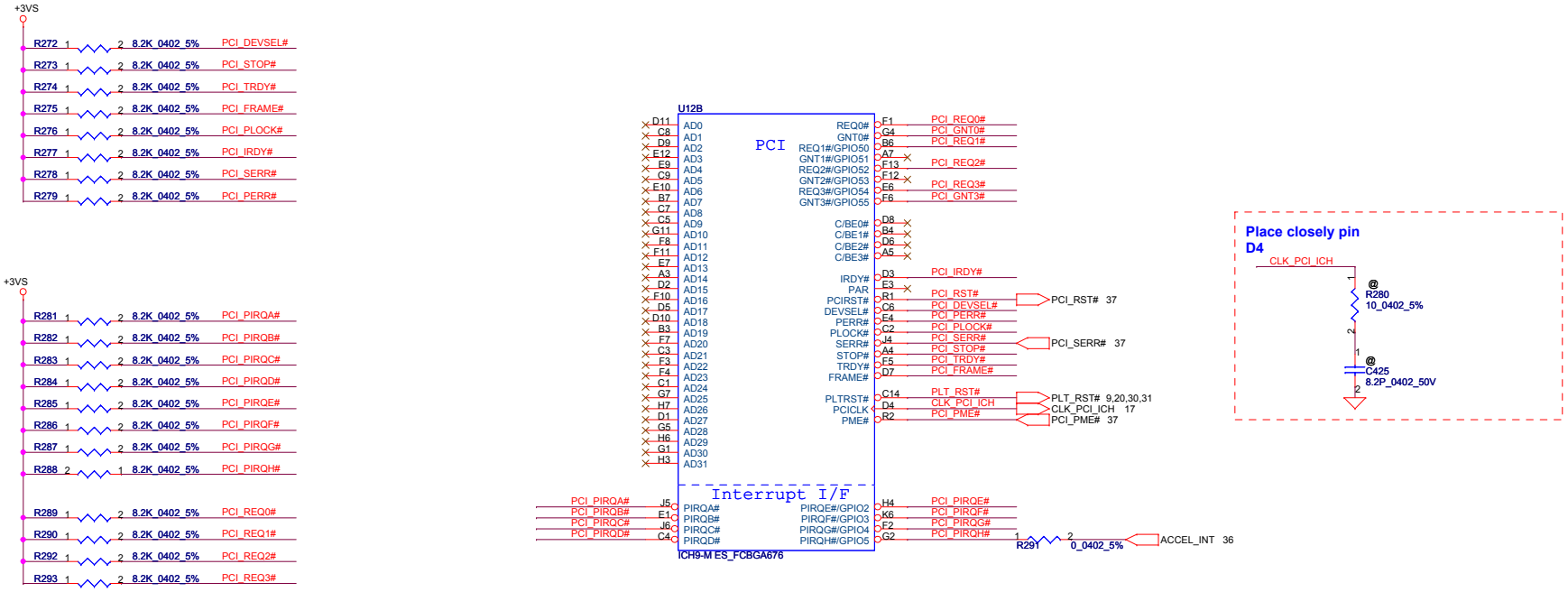


## A16 swap override Strap

| | |
|---|---|
| PCI_GNT3# | Low= A16 swap override Enble<br>High= Default ★ |

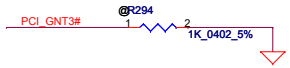


## Boot BIOS Strap

| PCI_GNT0# | SPI_CS#1 | Boot BIOS Location |
|---|---|---|
| 0 | 1 | SPI |
| 1 | 0 | PCI |
| 1 | 1 | LPC ★ |

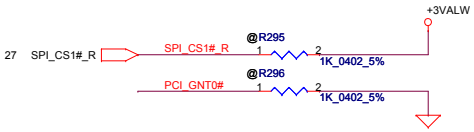


THIS SHEET OF ENGINEERING DRAWING IS THE PROPRIETARY PROPERTY OF COMPAL ELECTRONICS, INC. AND CONTAINS CONFIDENTIAL AND TRADE SECRET INFORMATION. THIS SHEET MAY NOT BE TRANSFERED FROM THE CUSTODY OF THE COMPETENT DIVISION OF R&D DEPARTMENT EXCEPT AS AUTHORIZED BY COMPAL ELECTRONICS, INC. NEITHER THIS SHEET NOR THE INFORMATION IT CONTAINS MAY BE USED BY OR DISCLOSED TO ANY THIRD PARTY WITHOUT PRIOR WRITTEN CONSENT OF COMPAL ELECTRONICS, INC.

| | | | |
|---|---|---|---|
| Security Classification | Compal Secret Data | | |
| Issued Date | 2008/11/04 | Deciphered Date | 2008/11/04 |

Compal Electronics, Inc.

Title: ICH9(1/4)-PCI/INT

Size: | Document Number: LA-4731P Rhett discrete | Rev: 0.1

Date: Monday, February 16, 2009 | Sheet 25 of 51

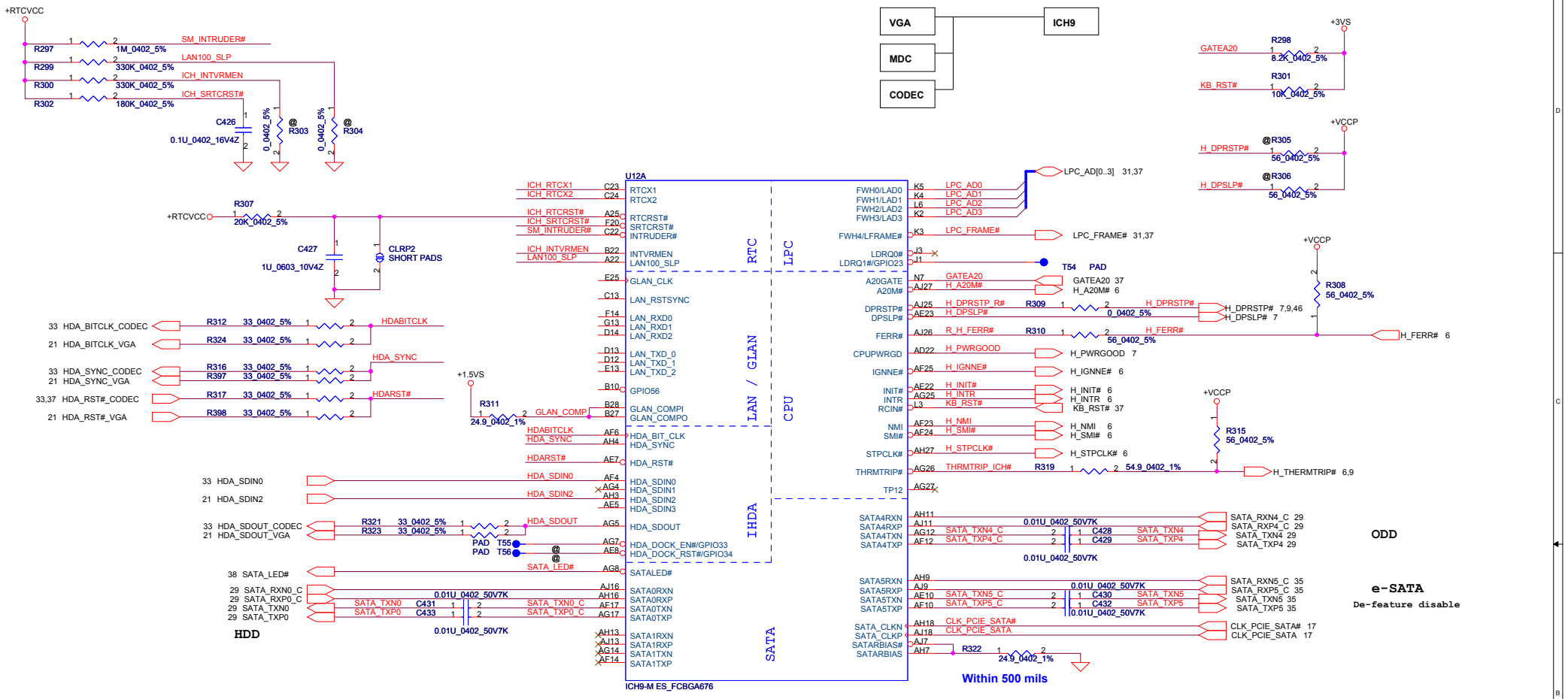


| ICH_RSVD | HDA_SDOUT_CODEC | |
|---|---|---|
| 0 | 0 | |
| 0 | 1 | |
| 1 | 0 | |
| 1 | 1 | |

| Security Classification | Compal Secret Data | | |
|---|---|---|---|
| Issued Date | 2008/11/04 | Deciphered Date | 2008/11/04 |

THIS SHEET OF ENGINEERING DRAWING IS THE PROPRIETARY PROPERTY OF COMPAL ELECTRONICS, INC. AND CONTAINS CONFIDENTIAL AND TRADE SECRET INFORMATION. THIS SHEET MAY NOT BE TRANSFERED FROM THE CUSTODY OF THE COMPETENT DIVISION OF R&D DEPARTMENT EXCEPT AS AUTHORIZED BY COMPAL ELECTRONICS, INC. NEITHER THIS SHEET NOR THE INFORMATION IT CONTAINS MAY BE USED BY OR DISCLOSED TO ANY THIRD PARTY WITHOUT PRIOR WRITTEN CONSENT OF COMPAL ELECTRONICS, INC.

Compal Electronics, Inc.

Title: ICH9(2/4) LAN,HD,IDE,LPC

Size: Custom | Document Number: LA-4731P Rhett discrete | Rev: 0.1

Date: Monday, February 16, 2009 | Sheet 26 of 51

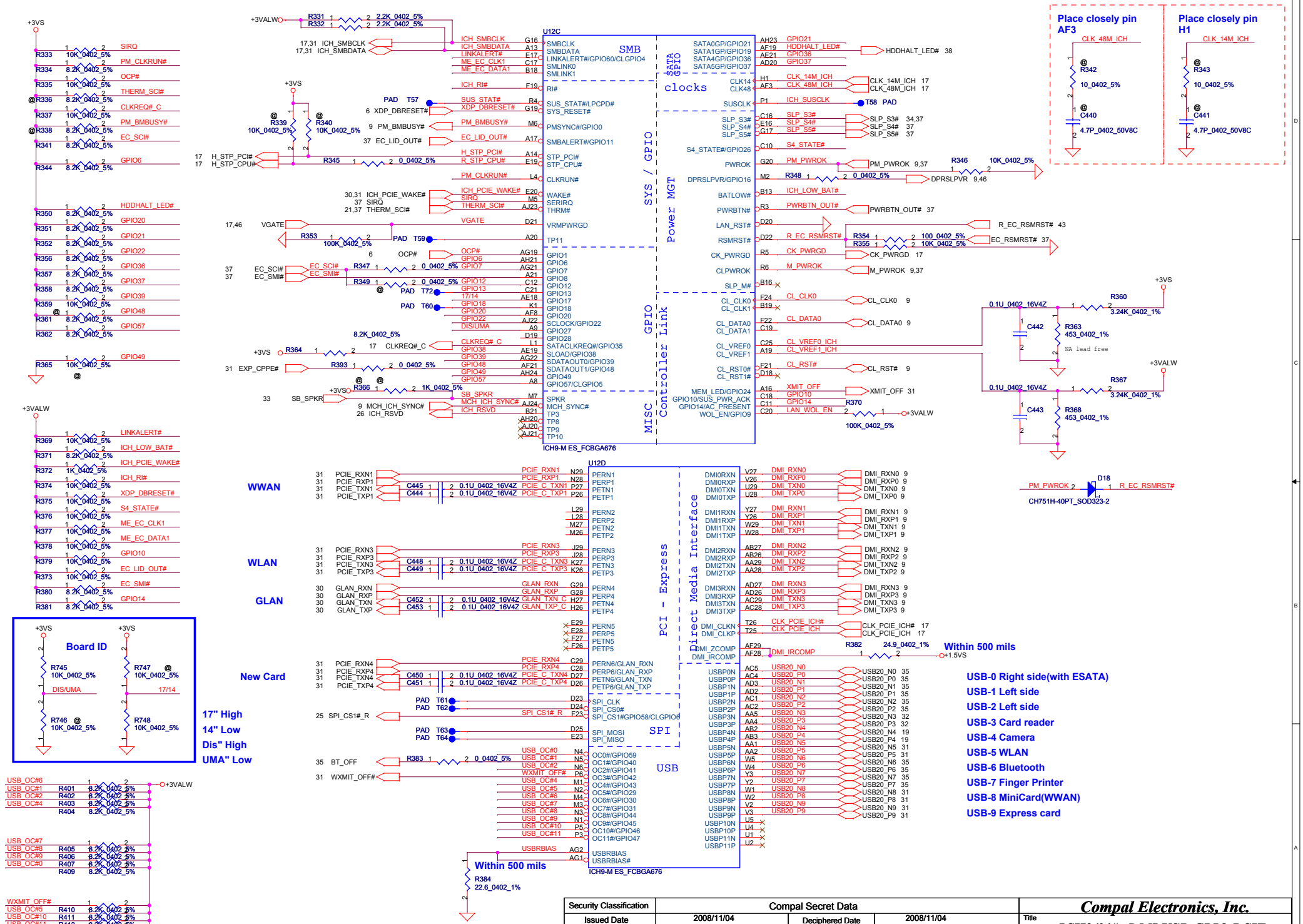


| Security Classification | Compal Secret Data | | |
|---|---|---|---|
| Issued Date | 2008/11/04 | Deciphered Date | 2008/11/04 |

THIS SHEET OF ENGINEERING DRAWING IS THE PROPRIETARY PROPERTY OF COMPAL ELECTRONICS, INC. AND CONTAINS CONFIDENTIAL AND TRADE SECRET INFORMATION. THIS SHEET MAY NOT BE TRANSFERED FROM THE CUSTODY OF THE COMPETENT DIVISION OF R&D DEPARTMENT EXCEPT AS AUTHORIZED BY COMPAL ELECTRONICS, INC. NEITHER THIS SHEET NOR THE INFORMATION IT CONTAINS MAY BE USED BY OR DISCLOSED TO ANY THIRD PARTY WITHOUT PRIOR WRITTEN CONSENT OF COMPAL ELECTRONICS, INC.

**Compal Electronics, Inc.**

Title: **ICH9(3/4) DMI,USB,GPIO,PCIE**

Size: Custom | Document Number: LA-4731P Rhett discrete | Rev: 0.1

Date: Monday, February 16, 2009 | Sheet 27 of 51

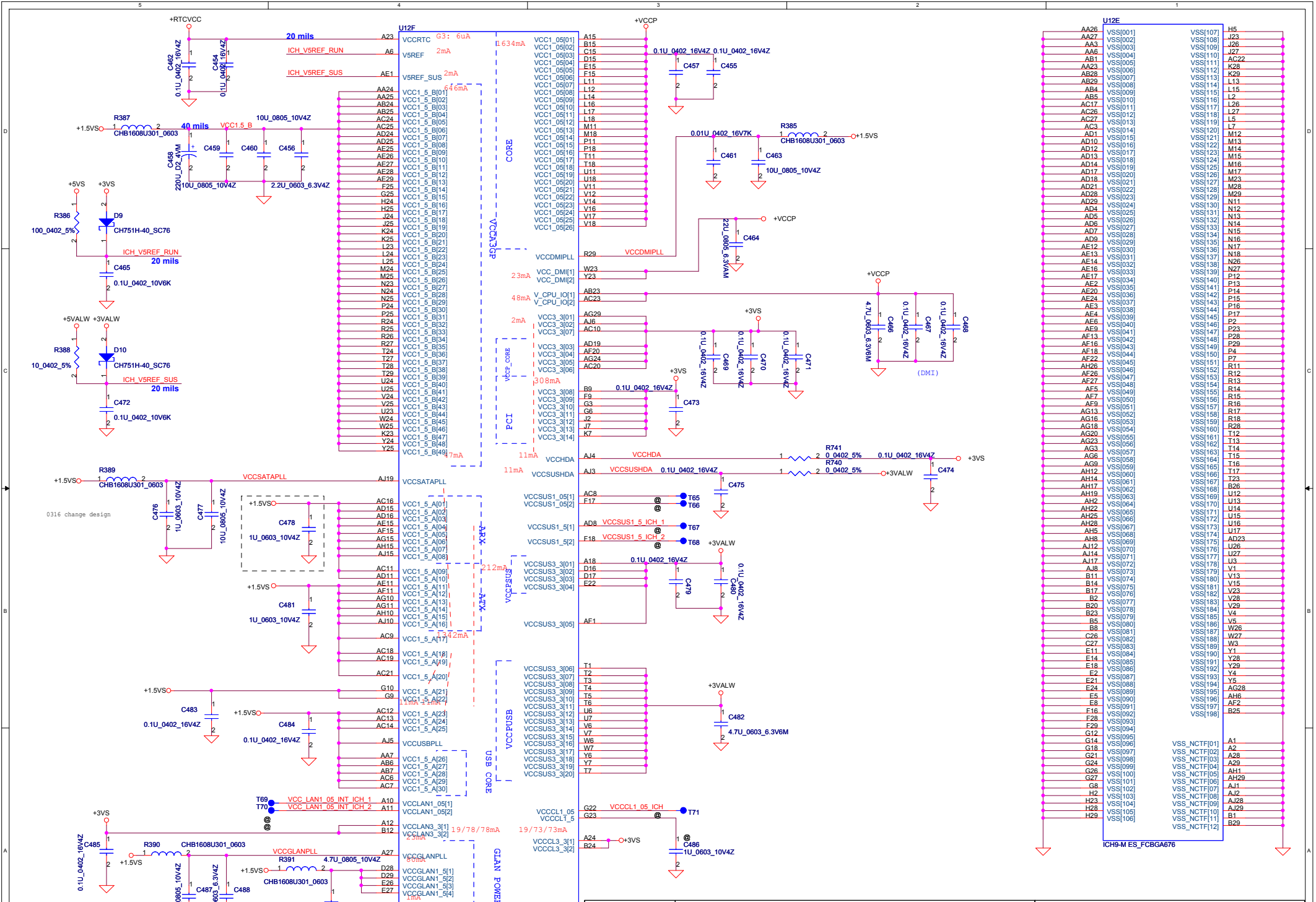


| Security Classification | Compal Secret Data | | |
|---|---|---|---|
| Issued Date | 2008/11/04 | Deciphered Date | 2008/11/04 |

THIS SHEET OF ENGINEERING DRAWING IS THE PROPRIETARY PROPERTY OF COMPAL ELECTRONICS, INC. AND CONTAINS CONFIDENTIAL AND TRADE SECRET INFORMATION. THIS SHEET MAY NOT BE TRANSFERED FROM THE CUSTODY OF THE COMPETENT DIVISION OF R&D DEPARTMENT EXCEPT AS AUTHORIZED BY COMPAL ELECTRONICS, INC. NEITHER THIS SHEET NOR THE INFORMATION IT CONTAINS MAY BE USED BY OR DISCLOSED TO ANY THIRD PARTY WITHOUT PRIOR WRITTEN CONSENT OF COMPAL ELECTRONICS, INC.

**Compal Electronics, Inc.**

Title: **ICH9(4/4) POWER&GND**

Size: Custom | Document Number: LA-4731P Rhett discrete | Rev: 0.1

Date: Thursday, February 12, 2009 | Sheet 28 of 51

# HDD Connector

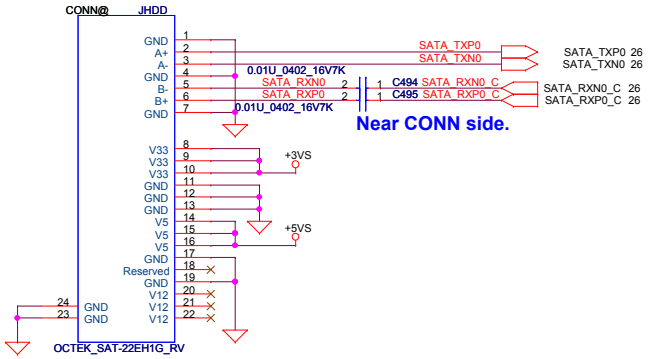


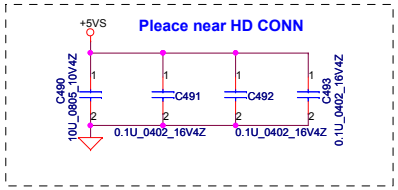


# CD-ROM Connector

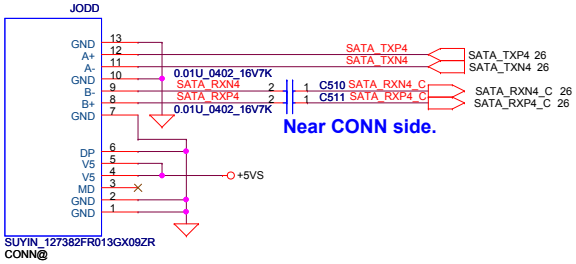


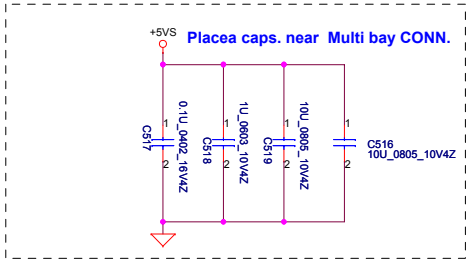


| Security Classification | Compal Secret Data | | |
|---|---|---|---|
| Issued Date | 2008/11/04 | Deciphered Date | 2008/11/04 |

THIS SHEET OF ENGINEERING DRAWING IS THE PROPRIETARY PROPERTY OF COMPAL ELECTRONICS, INC. AND CONTAINS CONFIDENTIAL AND TRADE SECRET INFORMATION. THIS SHEET MAY NOT BE TRANSFERED FROM THE CUSTODY OF THE COMPETENT DIVISION OF R&D DEPARTMENT EXCEPT AS AUTHORIZED BY COMPAL ELECTRONICS, INC. NEITHER THIS SHEET NOR THE INFORMATION IT CONTAINS MAY BE USED BY OR DISCLOSED TO ANY THIRD PARTY WITHOUT PRIOR WRITTEN CONSENT OF COMPAL ELECTRONICS, INC.

**Compal Electronics, Inc.**

Title: **HDD & CDROM**

Size: Custom | Document Number: *LA-4731P Rhett discrete* | Rev: 0.1

Date: Monday, February 16, 2009 | Sheet 29 of 51

# LAN Conn.

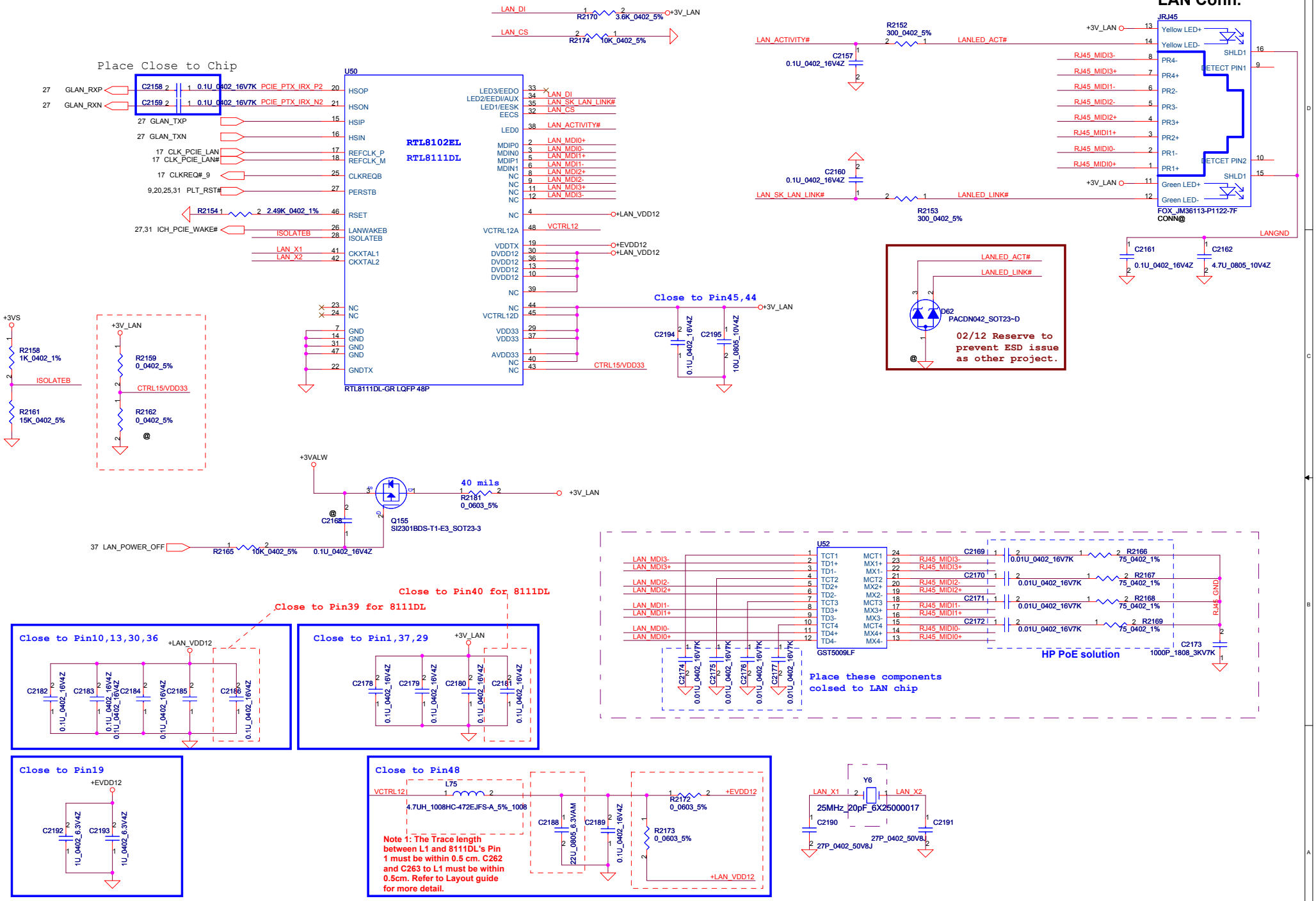


| Security Classification | Compal Secret Data | | |
|---|---|---|---|
| Issued Date | 2008/11/04 | Deciphered Date | 2008/11/04 |

THIS SHEET OF ENGINEERING DRAWING IS THE PROPRIETARY PROPERTY OF COMPAL ELECTRONICS, INC. AND CONTAINS CONFIDENTIAL AND TRADE SECRET INFORMATION. THIS SHEET MAY NOT BE TRANSFERED FROM THE CUSTODY OF THE COMPETENT DIVISION OF R&D DEPARTMENT EXCEPT AS AUTHORIZED BY COMPAL ELECTRONICS, INC. NEITHER THIS SHEET NOR THE INFORMATION IT CONTAINS MAY BE USED BY OR DISCLOSED TO ANY THIRD PARTY WITHOUT PRIOR WRITTEN CONSENT OF COMPAL ELECTRONICS, INC.

**Compal Electronics, Inc.**

Title: Realtek 8111DL Giga_LAN

Size: Custom | Document Number: LA-4731P Rhett discrete | Rev: 0.1

Date: Monday, February 16, 2009 | Sheet 30 of 51

# Mini Card Slot ---WLAN,WWAN

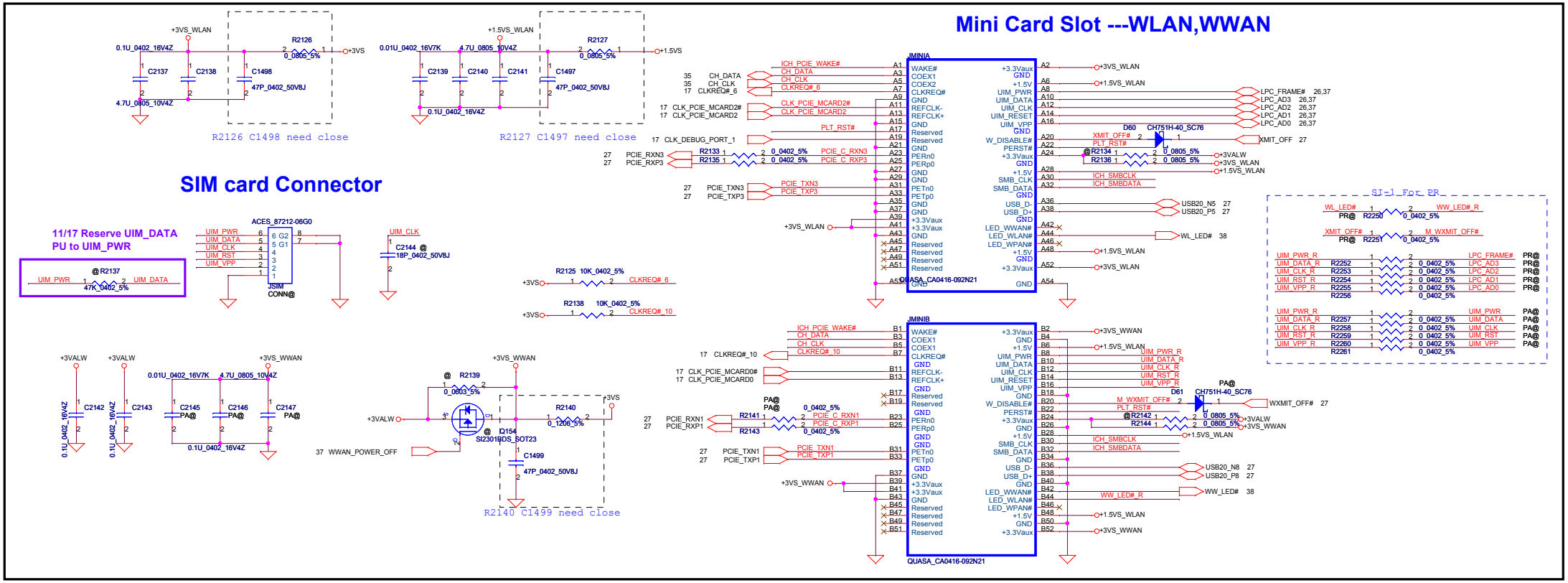


# SIM card Connector







# New Card

## Express Card Power Switch

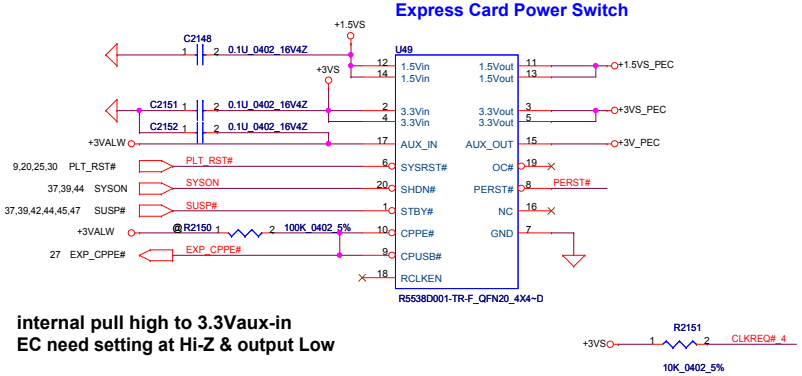


## Near to Express Card slot.

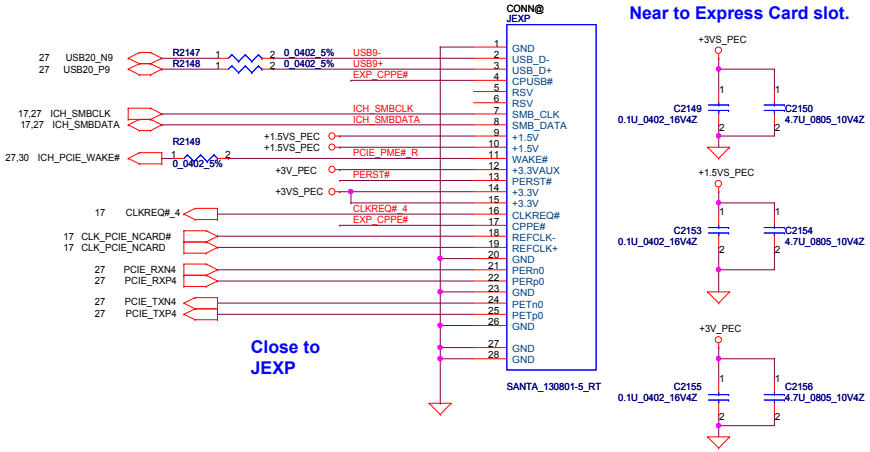


| Security Classification | Compal Secret Data | | |
|---|---|---|---|
| Issued Date | 2008/11/04 | Deciphered Date | 2008/11/04 |

THIS SHEET OF ENGINEERING DRAWING IS THE PROPRIETARY PROPERTY OF COMPAL ELECTRONICS, INC. AND CONTAINS CONFIDENTIAL AND TRADE SECRET INFORMATION. THIS SHEET MAY NOT BE TRANSFERED FROM THE CUSTODY OF THE COMPETENT DIVISION OF R&D DEPARTMENT EXCEPT AS AUTHORIZED BY COMPAL ELECTRONICS, INC. NEITHER THIS SHEET NOR THE INFORMATION IT CONTAINS MAY BE USED BY OR DISCLOSED TO ANY THIRD PARTY WITHOUT PRIOR WRITTEN CONSENT OF COMPAL ELECTRONICS, INC.

**Compal Electronics, Inc.**

Title: **WLAN, WWAN, New Card**

| Size | Document Number | Rev |
|---|---|---|
| | LA-4731P Rhett discrete | 0.1 |

Date: Monday, February 16, 2009 | Sheet 31 of 51

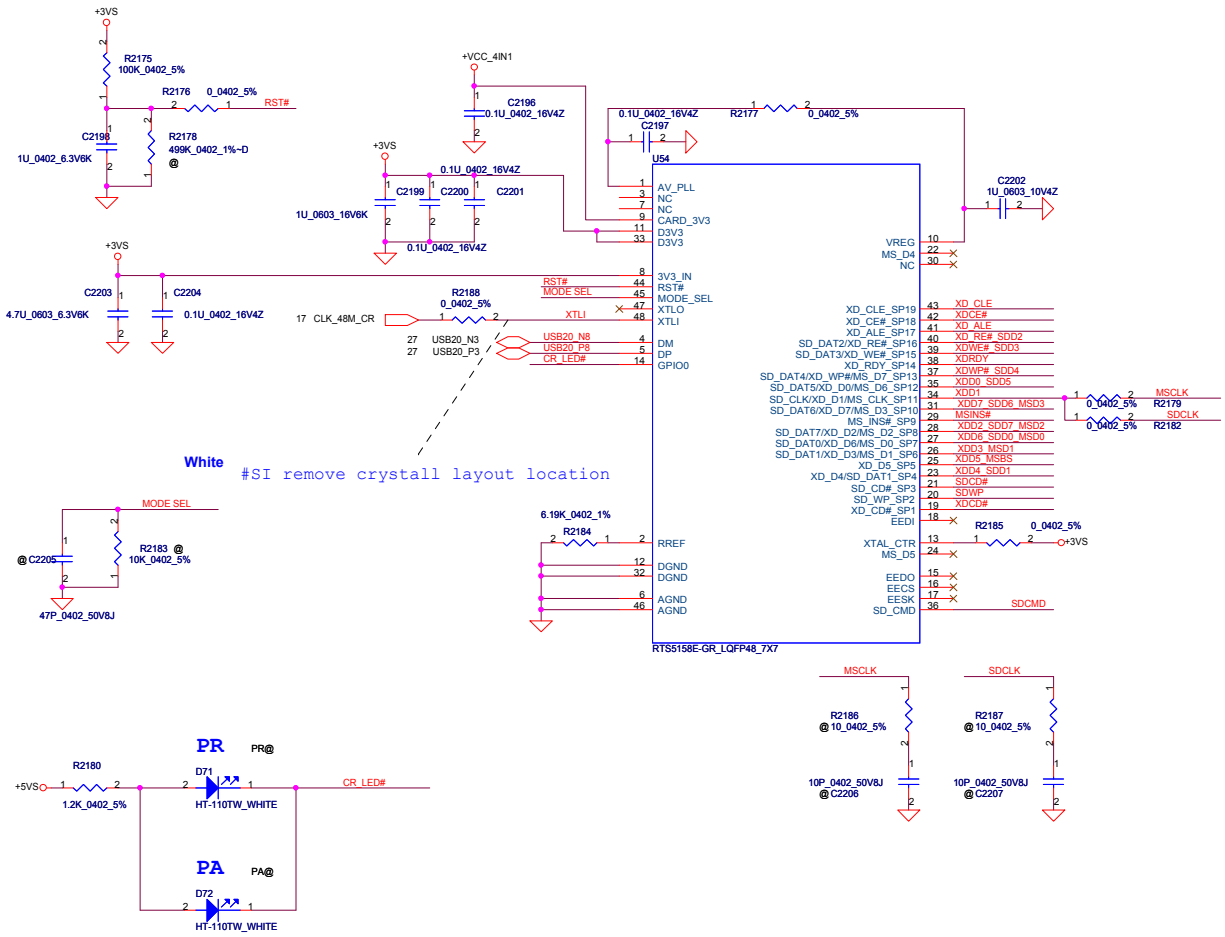


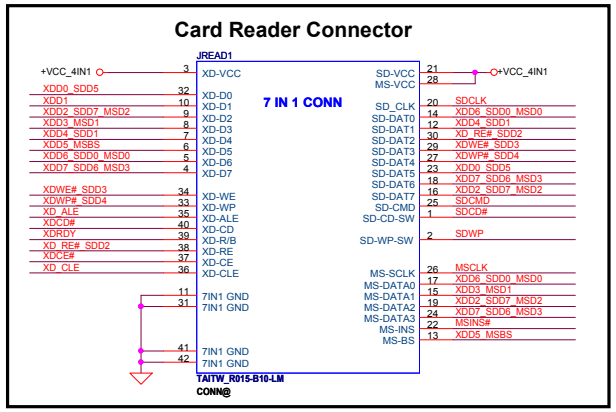


| Security Classification | Compal Secret Data | | |
|---|---|---|---|
| Issued Date | 2008/11/04 | Deciphered Date | 2008/11/04 |

THIS SHEET OF ENGINEERING DRAWING IS THE PROPRIETARY PROPERTY OF COMPAL ELECTRONICS, INC. AND CONTAINS CONFIDENTIAL AND TRADE SECRET INFORMATION. THIS SHEET MAY NOT BE TRANSFERED FROM THE CUSTODY OF THE COMPETENT DIVISION OF R&D DEPARTMENT EXCEPT AS AUTHORIZED BY COMPAL ELECTRONICS, INC. NEITHER THIS SHEET NOR THE INFORMATION IT CONTAINS MAY BE USED BY OR DISCLOSED TO ANY THIRD PARTY WITHOUT PRIOR WRITTEN CONSENT OF COMPAL ELECTRONICS, INC.

**Compal Electronics, Inc.**

Title: **USB CardReader&CONN**

Size: Custom | Document Number: LA-4731P Rhett discrete | Rev: 0.1

Date: Monday, February 16, 2009 | Sheet 32 of 51

# CODEC POWER

(4.75V(4.56~4.94V))

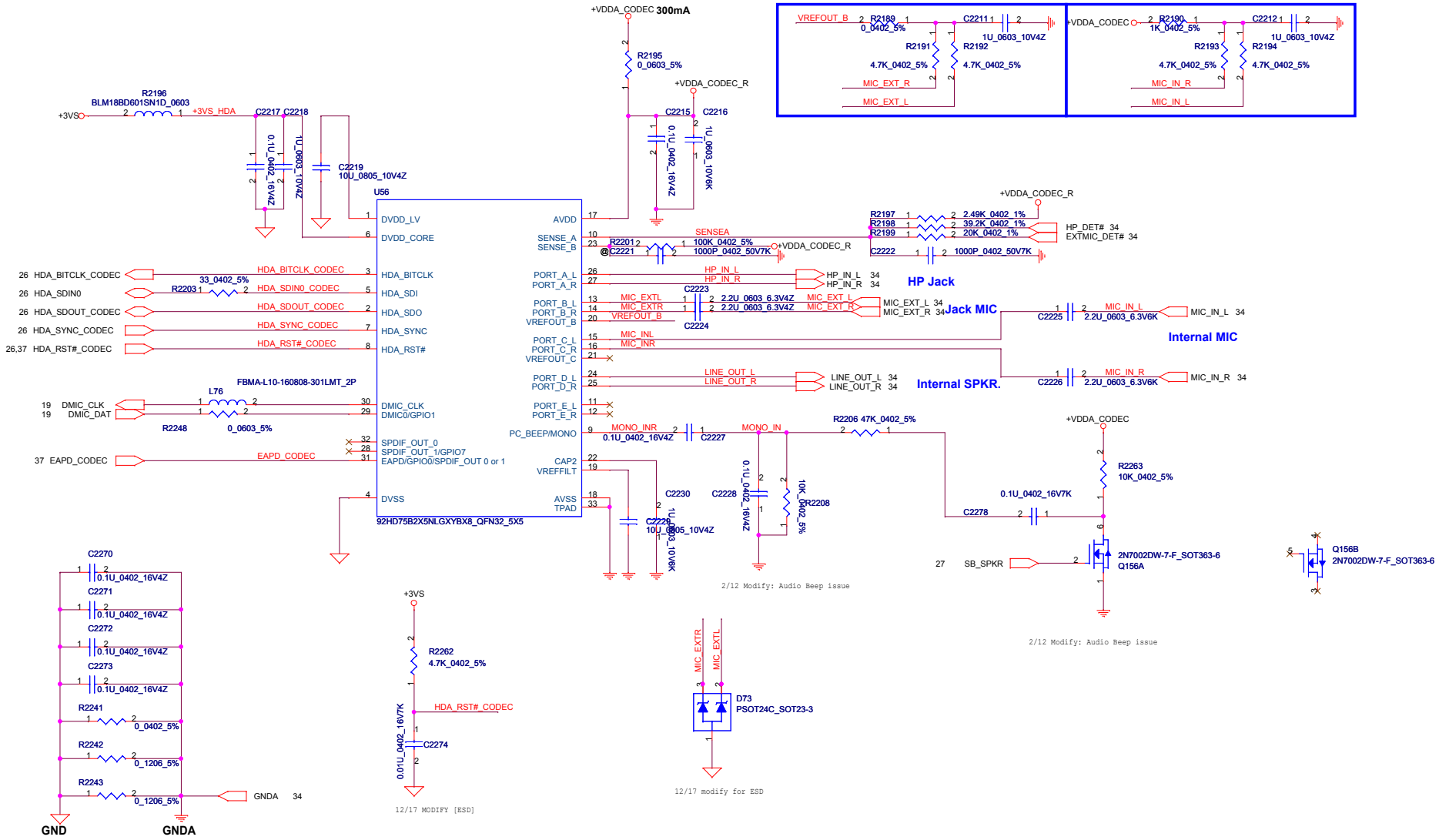


| Security Classification | Compal Secret Data | | |
|---|---|---|---|
| Issued Date | 2008/11/04 | Deciphered Date | 2008/11/04 |

THIS SHEET OF ENGINEERING DRAWING IS THE PROPRIETARY PROPERTY OF COMPAL ELECTRONICS, INC. AND CONTAINS CONFIDENTIAL AND TRADE SECRET INFORMATION. THIS SHEET MAY NOT BE TRANSFERED FROM THE CUSTODY OF THE COMPETENT DIVISION OF R&D DEPARTMENT EXCEPT AS AUTHORIZED BY COMPAL ELECTRONICS, INC. NEITHER THIS SHEET NOR THE INFORMATION IT CONTAINS MAY BE USED BY OR DISCLOSED TO ANY THIRD PARTY WITHOUT PRIOR WRITTEN CONSENT OF COMPAL ELECTRONICS, INC.

| Title | Codec_IDT9275B | |
|---|---|---|
| Size Custom | Document Number LA-4731P Rhett discrete | Rev 0.1 |
| Date: Monday, February 16, 2009 | Sheet 33 of 51 | |

# AMP. FOR INTERNAL SPEAKER

| GAIN1 | GAIN0 | Av(inv) |
|---|---|---|
| 0 | 0 | 10dB |
| 0 | 1 | 12dB |
| 1 | 0 | V 15.6dB |
| 1 | 1 | 21.6dB |

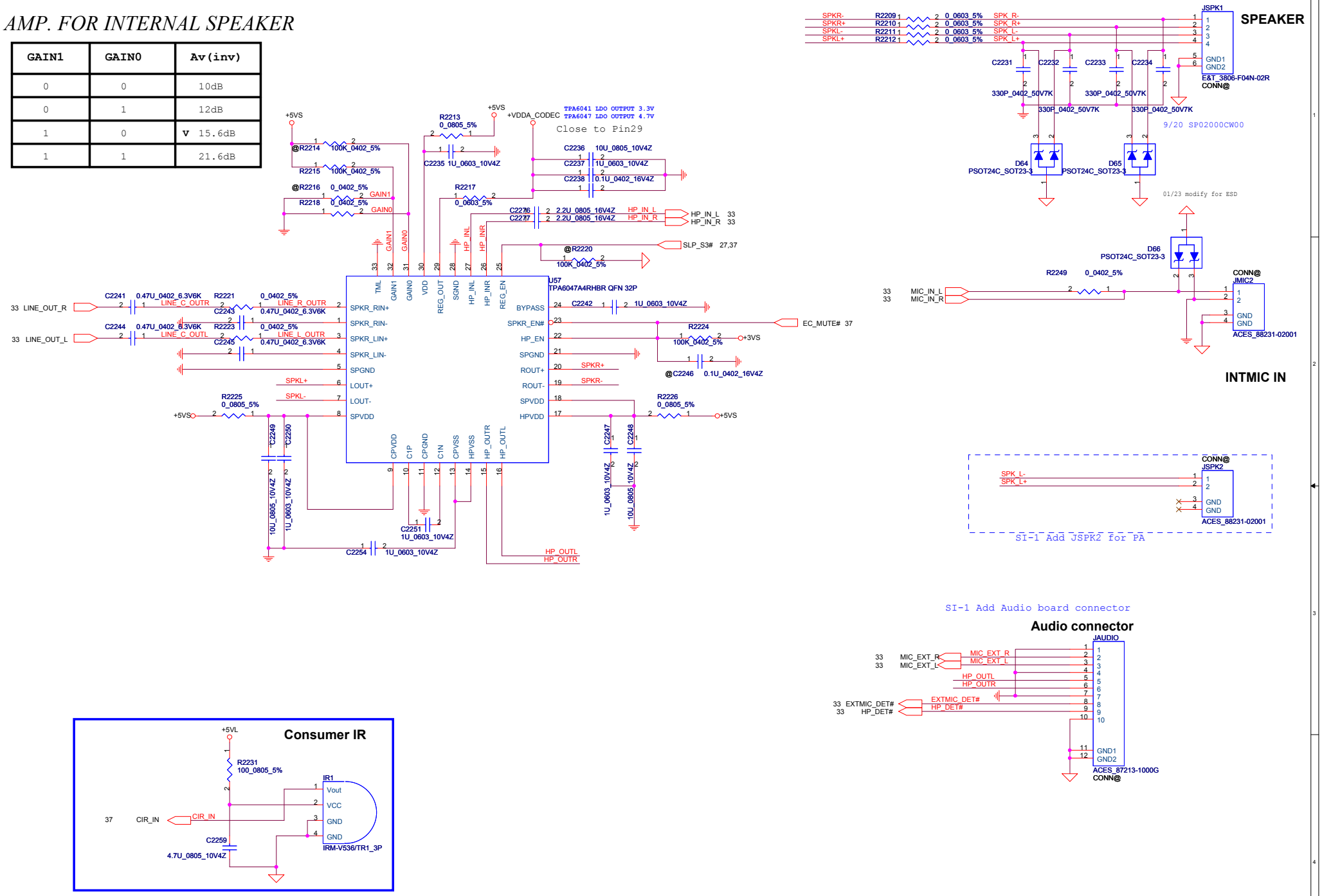


| Security Classification | Compal Secret Data | | |
|---|---|---|---|
| Issued Date | 2008/11/04 | Deciphered Date | 2008/11/04 |

THIS SHEET OF ENGINEERING DRAWING IS THE PROPRIETARY PROPERTY OF COMPAL ELECTRONICS, INC. AND CONTAINS CONFIDENTIAL AND TRADE SECRET INFORMATION. THIS SHEET MAY NOT BE TRANSFERED FROM THE CUSTODY OF THE COMPETENT DIVISION OF R&D DEPARTMENT EXCEPT AS AUTHORIZED BY COMPAL ELECTRONICS, INC. NEITHER THIS SHEET NOR THE INFORMATION IT CONTAINS MAY BE USED BY OR DISCLOSED TO ANY THIRD PARTY WITHOUT PRIOR WRITTEN CONSENT OF COMPAL ELECTRONICS, INC.

Title: AMP & Audio Jack

Size: Custom | Document Number: LA-4731P Rhett discrete | Rev: 0.1

Date: Monday, February 16, 2009 | Sheet 34 of 51

# Right side ESATA/USB combination Connector

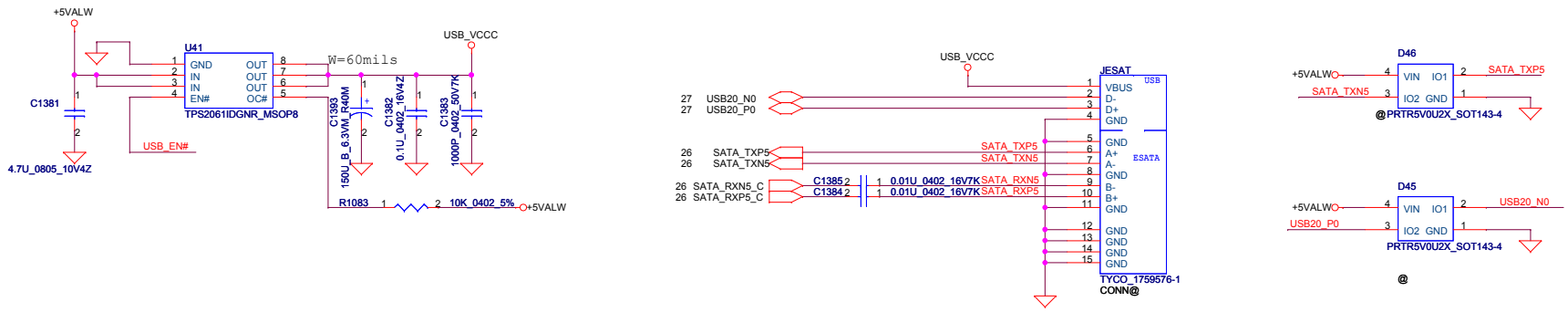


# USB cable connector for Right side

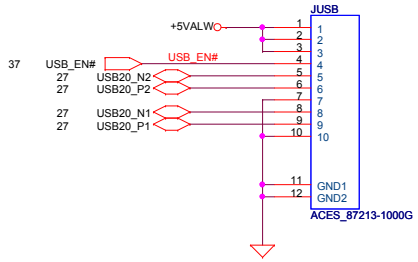


# Finger printer

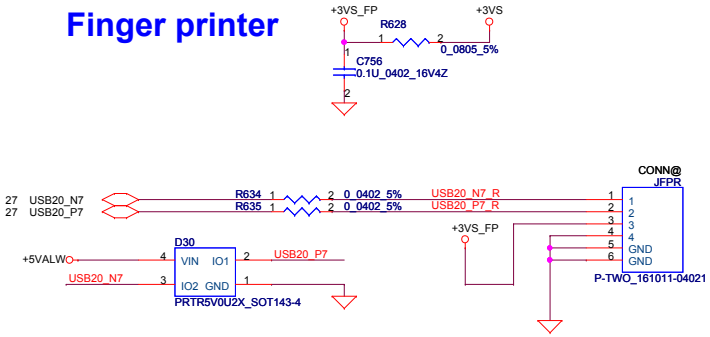


# BT Connector

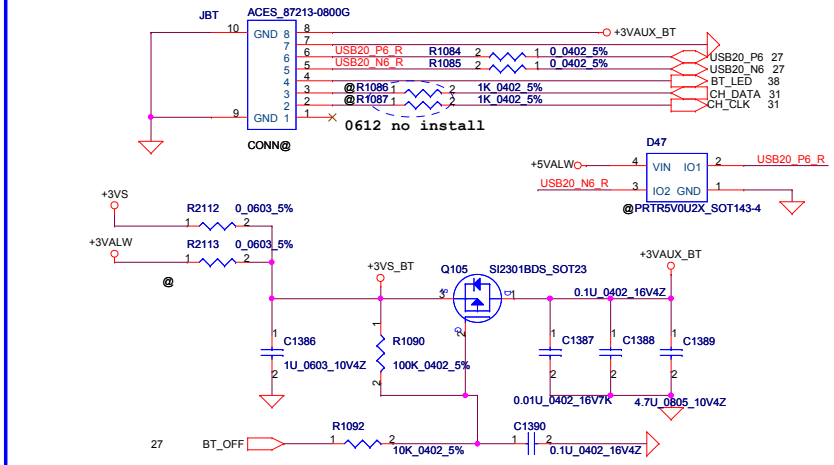


| Security Classification | Compal Secret Data | | |
|---|---|---|---|
| Issued Date | 2008/11/04 | Deciphered Date | 2008/11/04 |

THIS SHEET OF ENGINEERING DRAWING IS THE PROPRIETARY PROPERTY OF COMPAL ELECTRONICS, INC. AND CONTAINS CONFIDENTIAL AND TRADE SECRET INFORMATION. THIS SHEET MAY NOT BE TRANSFERED FROM THE CUSTODY OF THE COMPETENT DIVISION OF R&D DEPARTMENT EXCEPT AS AUTHORIZED BY COMPAL ELECTRONICS, INC. NEITHER THIS SHEET NOR THE INFORMATION IT CONTAINS MAY BE USED BY OR DISCLOSED TO ANY THIRD PARTY WITHOUT PRIOR WRITTEN CONSENT OF COMPAL ELECTRONICS, INC.

**Compal Electronics, Inc.**

Title: **USB, BT, eSATA**

Size | Document Number: *LA-4731P Rhett discrete* | Rev: 0.1

Date: Monday, February 16, 2009 | Sheet 35 of 51

# SPI ROM

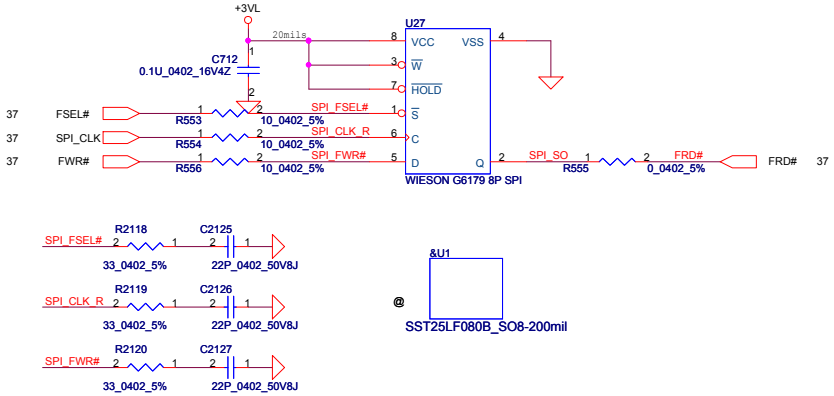


# Acceleromter-1

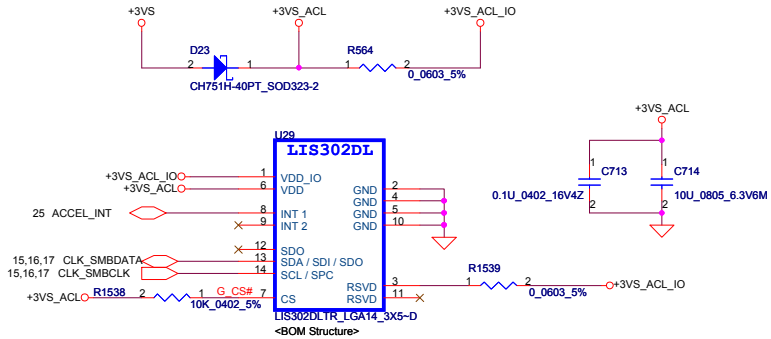


Must be placed in the center of the system.

| Security Classification | Compal Secret Data | | | Compal Electronics, Inc. |
|---|---|---|---|---|
| Issued Date | 2008/11/04 | Deciphered Date | 2008/11/04 | Title: BIOS ROM |
| | | | | Size / Document Number: LA-4731P Rhett discrete / Rev: 0.1 |
| | | | | Date: Monday, February 16, 2009 / Sheet 36 of 51 |

THIS SHEET OF ENGINEERING DRAWING IS THE PROPRIETARY PROPERTY OF COMPAL ELECTRONICS, INC. AND CONTAINS CONFIDENTIAL AND TRADE SECRET INFORMATION. THIS SHEET MAY NOT BE TRANSFERED FROM THE CUSTODY OF THE COMPETENT DIVISION OF R&D DEPARTMENT EXCEPT AS AUTHORIZED BY COMPAL ELECTRONICS, INC. NEITHER THIS SHEET NOR THE INFORMATION IT CONTAINS MAY BE USED BY OR DISCLOSED TO ANY THIRD PARTY WITHOUT PRIOR WRITTEN CONSENT OF COMPAL ELECTRONICS, INC.

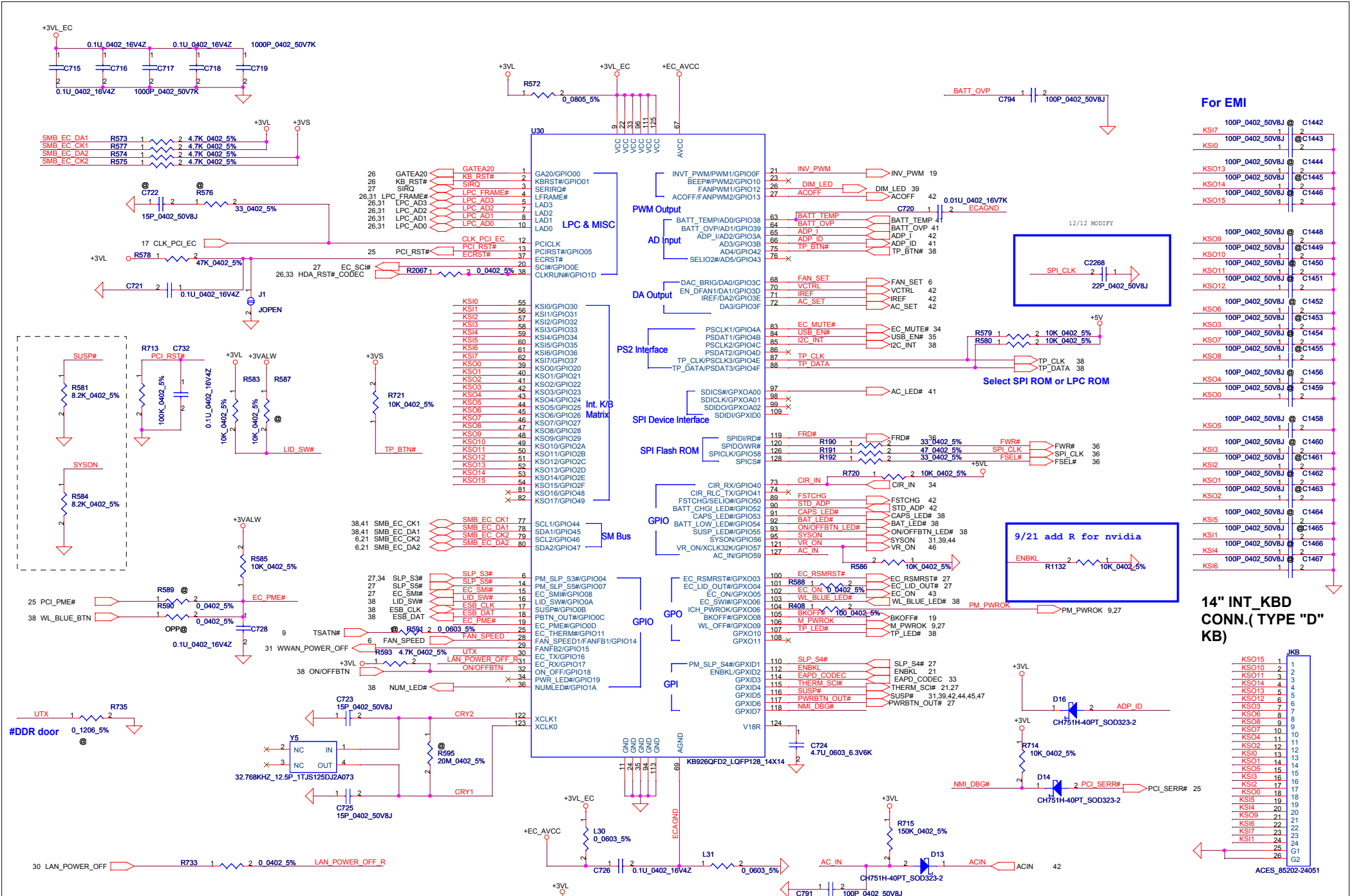


| Security Classification | Compal Secret Data | | |
|---|---|---|---|
| Issued Date | 2008/11/04 | Deciphered Date | 2008/11/04 |

THIS SHEET OF ENGINEERING DRAWING IS THE PROPRIETARY PROPERTY OF COMPAL ELECTRONICS, INC. AND CONTAINS CONFIDENTIAL AND TRADE SECRET INFORMATION. THIS SHEET MAY NOT BE TRANSFERED FROM THE CUSTODY OF THE COMPETENT DIVISION OF R&D DEPARTMENT EXCEPT AS AUTHORIZED BY COMPAL ELECTRONICS, INC. NEITHER THIS SHEET NOR THE INFORMATION IT CONTAINS MAY BE USED BY OR DISCLOSED TO ANY THIRD PARTY WITHOUT PRIOR WRITTEN CONSENT OF COMPAL ELECTRONICS, INC.

**Compal Electronics, Inc.**

Title: **EC KB926/KB Conn.**

Size | Document Number: *LA-4731P Rhett discrete* | Rev: 0.1

Date: Monday, February 16, 2009 | Sheet 37 of 51

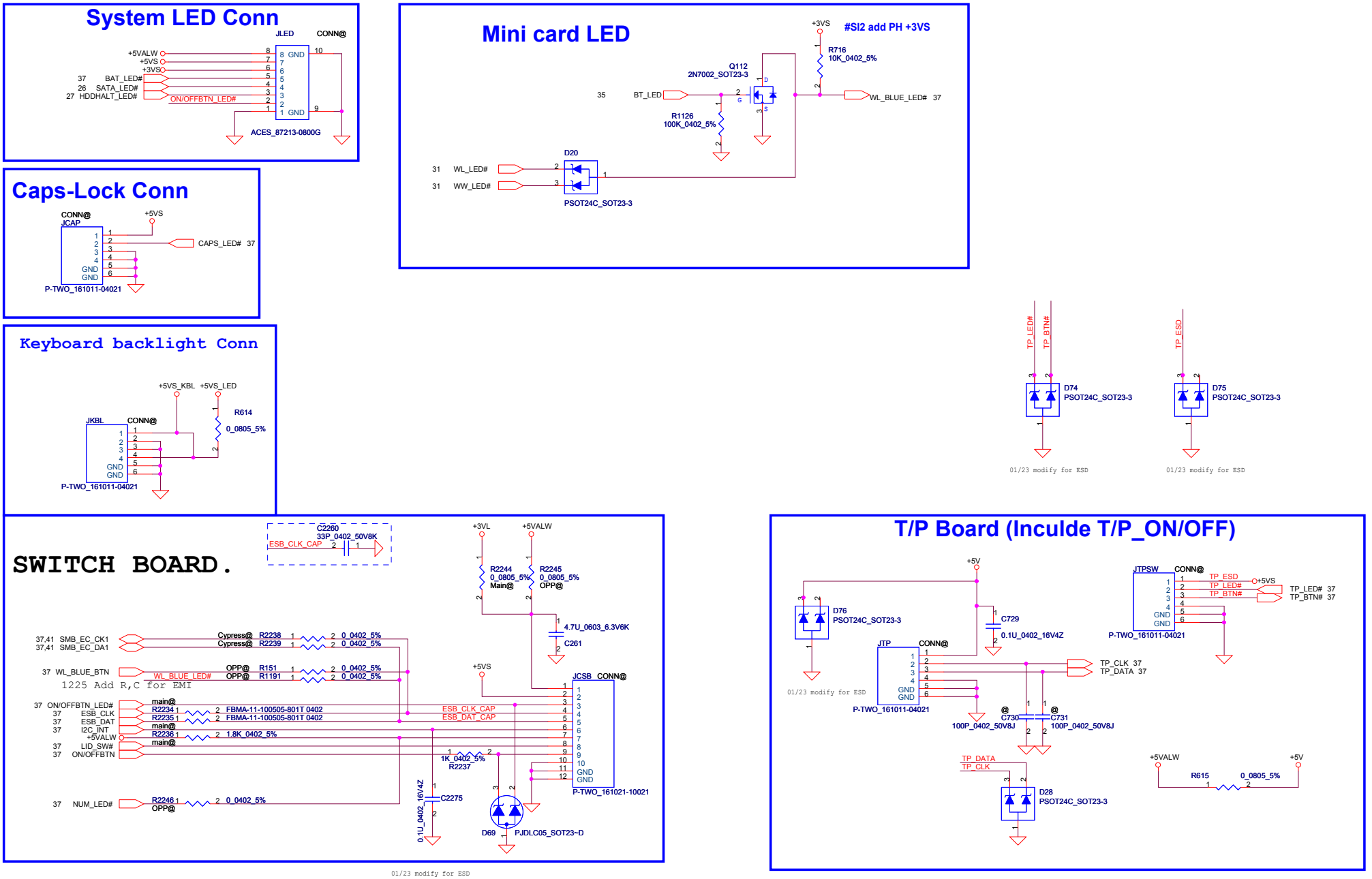


| Security Classification | Compal Secret Data | | |
|---|---|---|---|
| Issued Date | 2008/11/04 | Deciphered Date | 2008/11/04 |

THIS SHEET OF ENGINEERING DRAWING IS THE PROPRIETARY PROPERTY OF COMPAL ELECTRONICS, INC. AND CONTAINS CONFIDENTIAL AND TRADE SECRET INFORMATION. THIS SHEET MAY NOT BE TRANSFERED FROM THE CUSTODY OF THE COMPETENT DIVISION OF R&D DEPARTMENT EXCEPT AS AUTHORIZED BY COMPAL ELECTRONICS, INC. NEITHER THIS SHEET NOR THE INFORMATION IT CONTAINS MAY BE USED BY OR DISCLOSED TO ANY THIRD PARTY WITHOUT PRIOR WRITTEN CONSENT OF COMPAL ELECTRONICS, INC.

Compal Electronics, Inc.

Title: LED, TP,KBL,Cab sensor boar

Size | Document Number: LA-4731P Rhett discrete | Rev: 0.1

Date: Monday, February 16, 2009 | Sheet 38 of 51

## +5VALW to +5VS Transfer

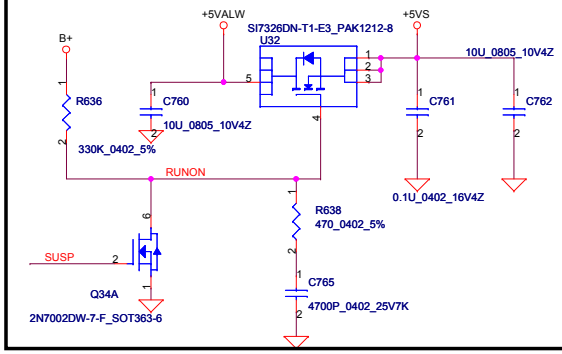


## +3VALW to +3VS Transfer

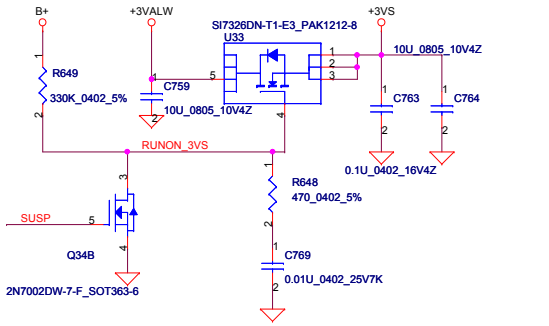


## DIM LED

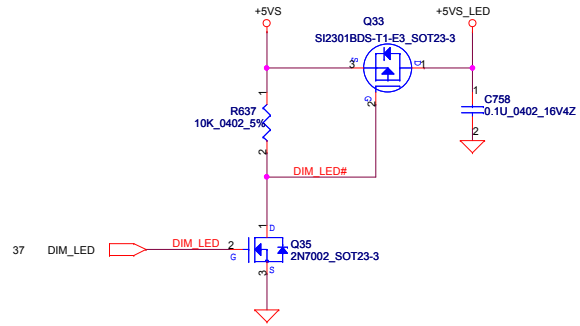


## +1.5V to +1.5VS Transfer

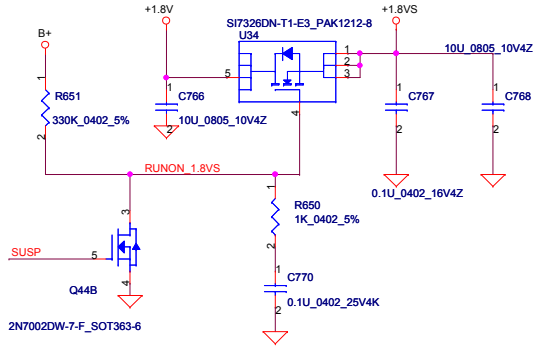


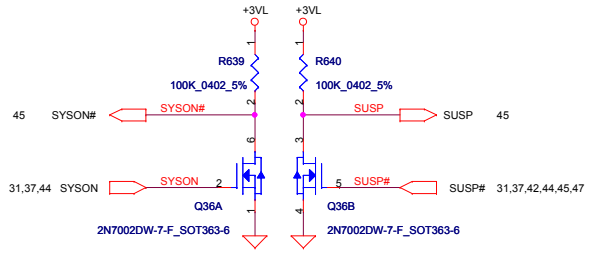


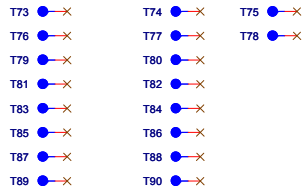


## Discharge circuit

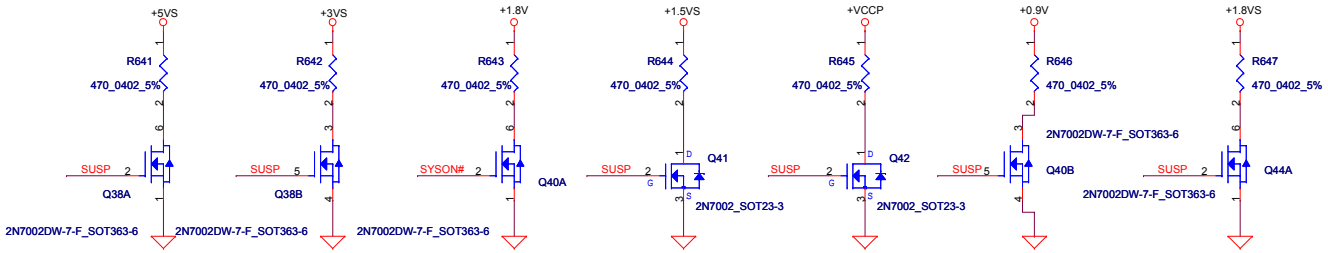


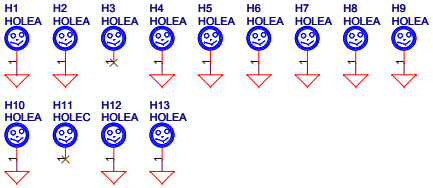

| Security Classification | Compal Secret Data | | |
|---|---|---|---|
| Issued Date | 2008/11/04 | Deciphered Date | 2008/11/04 |

THIS SHEET OF ENGINEERING DRAWING IS THE PROPRIETARY PROPERTY OF COMPAL ELECTRONICS, INC. AND CONTAINS CONFIDENTIAL AND TRADE SECRET INFORMATION. THIS SHEET MAY NOT BE TRANSFERED FROM THE CUSTODY OF THE COMPETENT DIVISION OF R&D DEPARTMENT EXCEPT AS AUTHORIZED BY COMPAL ELECTRONICS, INC. NEITHER THIS SHEET NOR THE INFORMATION IT CONTAINS MAY BE USED BY OR DISCLOSED TO ANY THIRD PARTY WITHOUT PRIOR WRITTEN CONSENT OF COMPAL ELECTRONICS, INC.

**Compal Electronics, Inc.**

Title: **DC/DC Interface**

Size | Document Number: *LA-4731P Rhett discrete* | Rev 0.1

Date: Monday, February 16, 2009 | Sheet 39 of 51

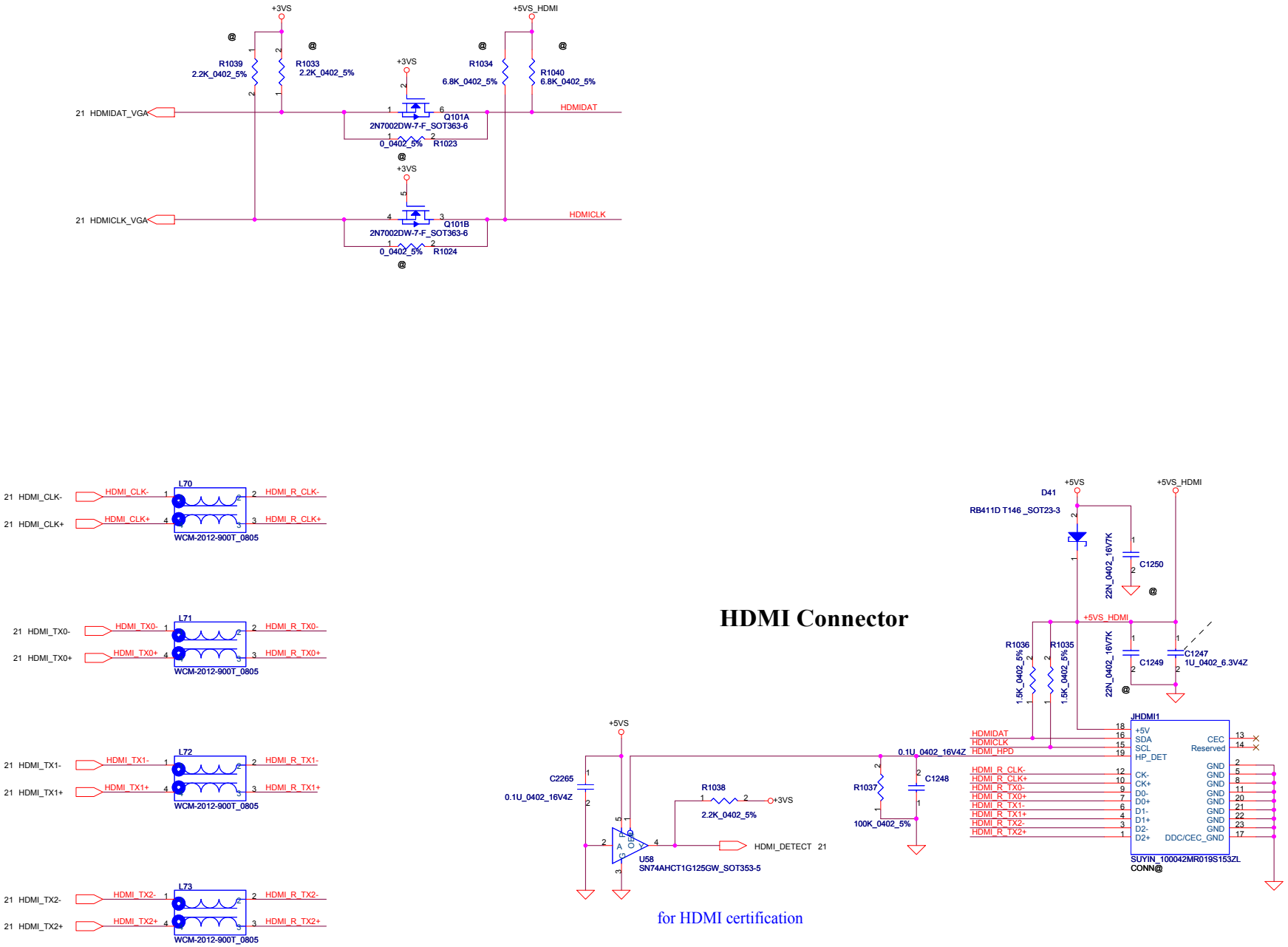


# HDMI Connector

for HDMI certification

| Security Classification | Compal Secret Data | | |
|---|---|---|---|
| Issued Date | 2008/11/04 | Deciphered Date | 2008/11/04 |

THIS SHEET OF ENGINEERING DRAWING IS THE PROPRIETARY PROPERTY OF COMPAL ELECTRONICS, INC. AND CONTAINS CONFIDENTIAL AND TRADE SECRET INFORMATION. THIS SHEET MAY NOT BE TRANSFERED FROM THE CUSTODY OF THE COMPETENT DIVISION OF R&D DEPARTMENT EXCEPT AS AUTHORIZED BY COMPAL ELECTRONICS, INC. NEITHER THIS SHEET NOR THE INFORMATION IT CONTAINS MAY BE USED BY OR DISCLOSED TO ANY THIRD PARTY WITHOUT PRIOR WRITTEN CONSENT OF COMPAL ELECTRONICS, INC.

**Compal Electronics, Inc.**

Title: **HDMI LS & Conn.**

Size: Custom | Document Number: LA-4731P Rhett discrete | Rev: 0.1

Date: Monday, February 16, 2009 | Sheet 40 of 51

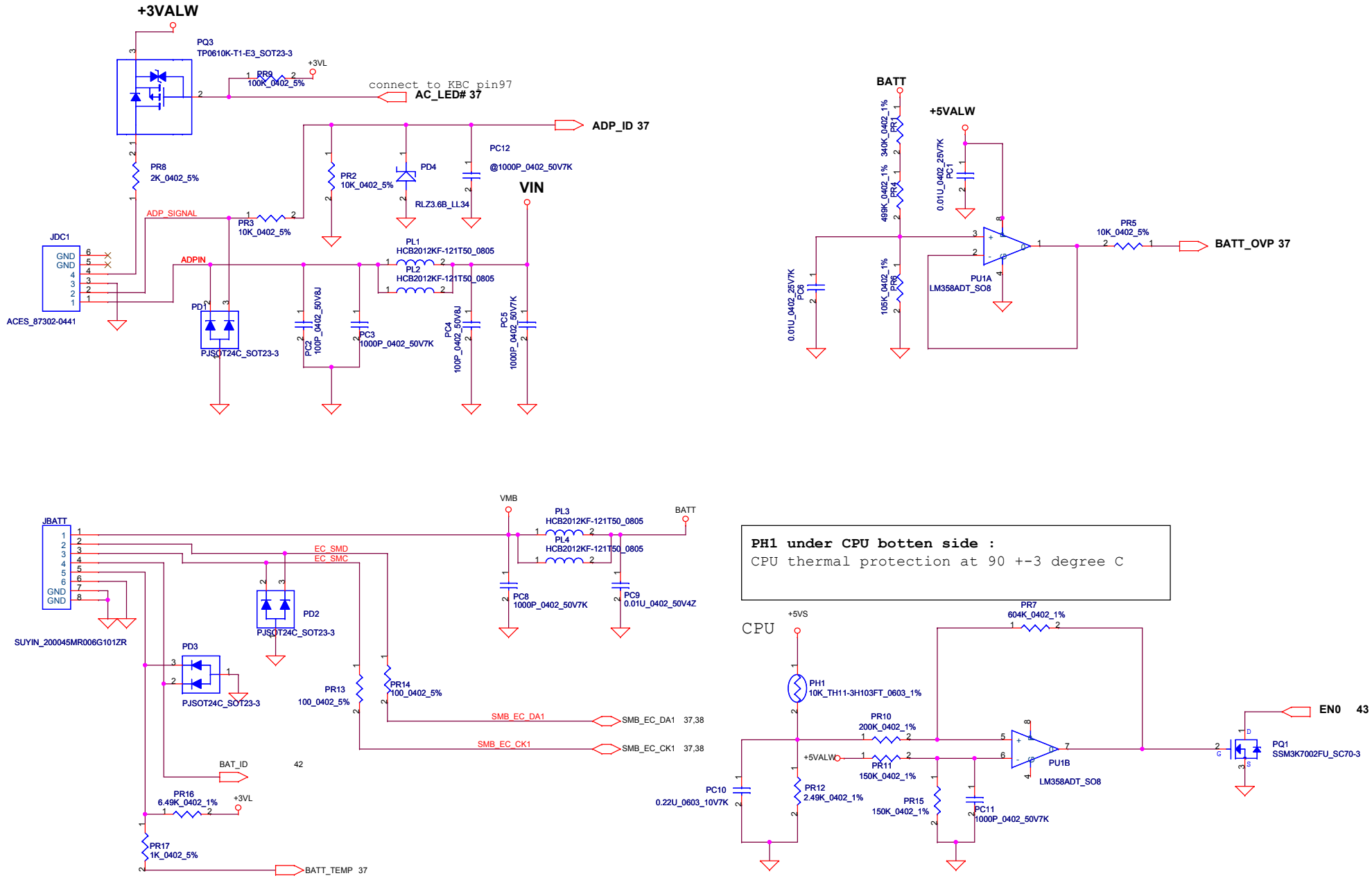


| Security Classification | Compal Secret Data | | |
|---|---|---|---|
| Issued Date | 2007/05/29 | Deciphered Date | 2008/05/29 |

THIS SHEET OF ENGINEERING DRAWING IS THE PROPRIETARY PROPERTY OF COMPAL ELECTRONICS, INC. AND CONTAINS CONFIDENTIAL AND TRADE SECRET INFORMATION. THIS SHEET MAY NOT BE TRANSFERED FROM THE CUSTODY OF THE COMPETENT DIVISION OF R&D DEPARTMENT EXCEPT AS AUTHORIZED BY COMPAL ELECTRONICS, INC. NEITHER THIS SHEET NOR THE INFORMATION IT CONTAINS MAY BE USED BY OR DISCLOSED TO ANY THIRD PARTY WITHOUT PRIOR WRITTEN CONSENT OF COMPAL ELECTRONICS, INC.

**Compal Electronics, Inc.**

Title: **DC Connector/CPU_OTP**

Size | Document Number: *Montevina Consumer Discrete* | Rev 0.1

Date: Monday, February 16, 2009 | Sheet 41 of 51

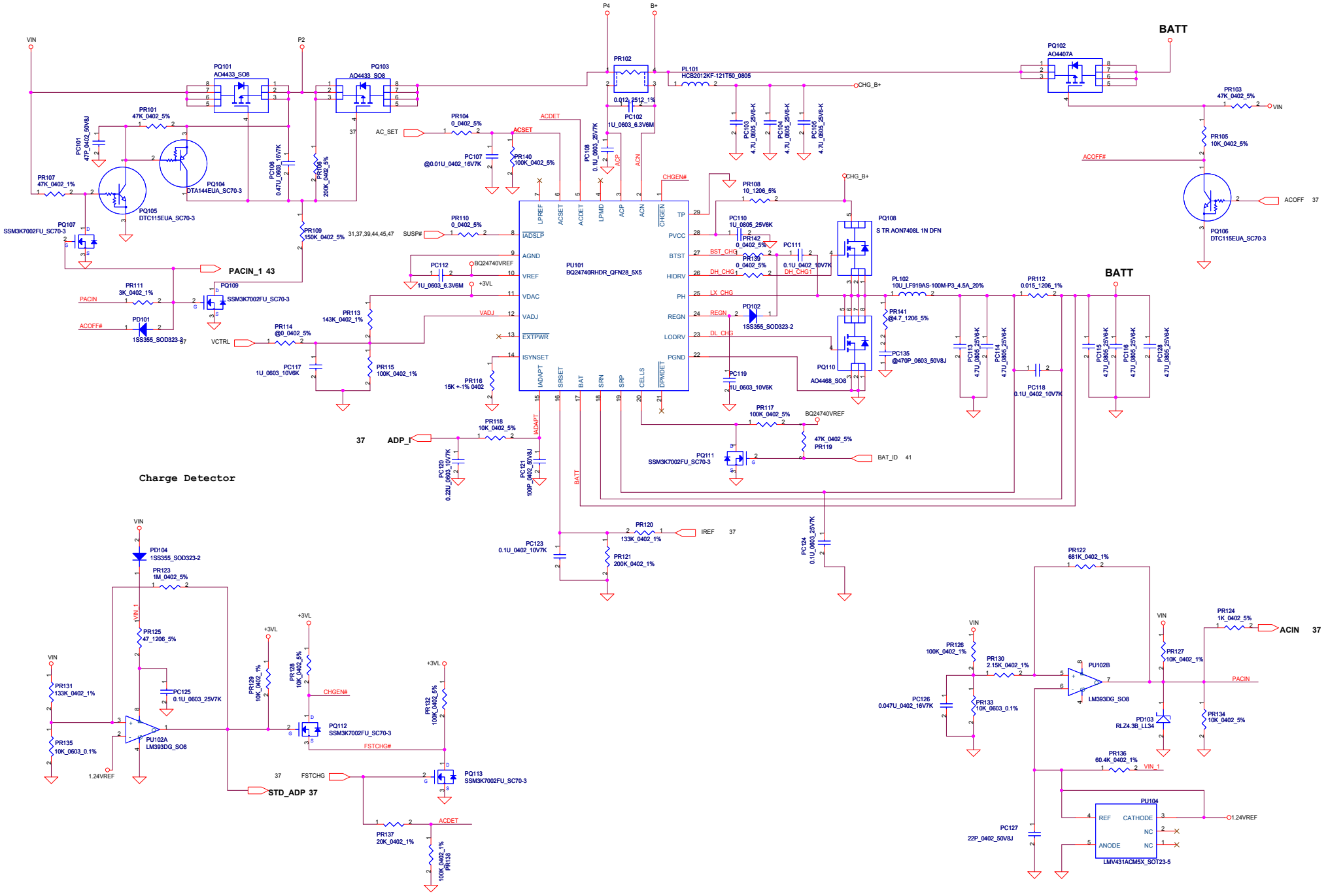


| Security Classification | Compal Secret Data | | |
|---|---|---|---|
| Issued Date | 2007/05/29 | Deciphered Date | 2008/05/29 |

THIS SHEET OF ENGINEERING DRAWING IS THE PROPRIETARY PROPERTY OF COMPAL ELECTRONICS, INC. AND CONTAINS CONFIDENTIAL AND TRADE SECRET INFORMATION. THIS SHEET MAY NOT BE TRANSFERED FROM THE CUSTODY OF THE COMPETENT DIVISION OF R&D DEPARTMENT EXCEPT AS AUTHORIZED BY COMPAL ELECTRONICS, INC. NEITHER THIS SHEET NOR THE INFORMATION IT CONTAINS MAY BE USED BY OR DISCLOSED TO ANY THIRD PARTY WITHOUT PRIOR WRITTEN CONSENT OF COMPAL ELECTRONICS, INC.

**Compal Electronics, Inc.**

Title: **Charger**

Size | Document Number: **LA-4481P** | Rev: 0.1

Date: Monday, February 16, 2009 | Sheet 42 of 51

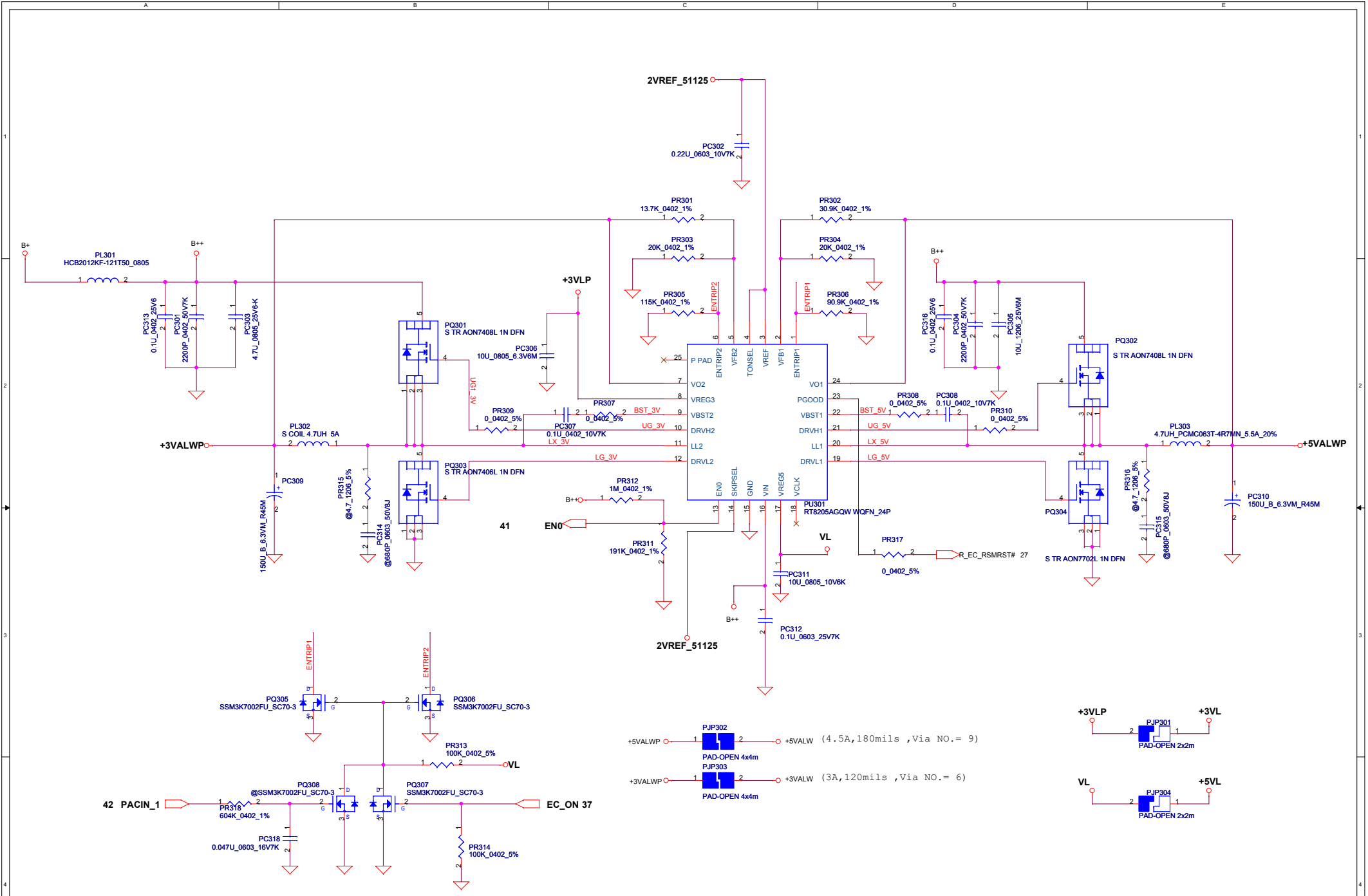


| Security Classification | Compal Secret Data | | |
|---|---|---|---|
| Issued Date | 2007/08/02 | Deciphered Date | 2008/08/02 |

THIS SHEET OF ENGINEERING DRAWING IS THE PROPRIETARY PROPERTY OF COMPAL ELECTRONICS, INC. AND CONTAINS CONFIDENTIAL AND TRADE SECRET INFORMATION. THIS SHEET MAY NOT BE TRANSFERED FROM THE CUSTODY OF THE COMPETENT DIVISION OF R&D DEPARTMENT EXCEPT AS AUTHORIZED BY COMPAL ELECTRONICS, INC. NEITHER THIS SHEET NOR THE INFORMATION IT CONTAINS MAY BE USED BY OR DISCLOSED TO ANY THIRD PARTY WITHOUT PRIOR WRITTEN CONSENT OF COMPAL ELECTRONICS, INC.

**Compal Electronics, Inc.**

Title: **3.3VALWP/5VALWP**

Size: Custom | Document Number: LA-4481P | Rev: 0.1

Date: Monday, February 16, 2009 | Sheet 43 of 51

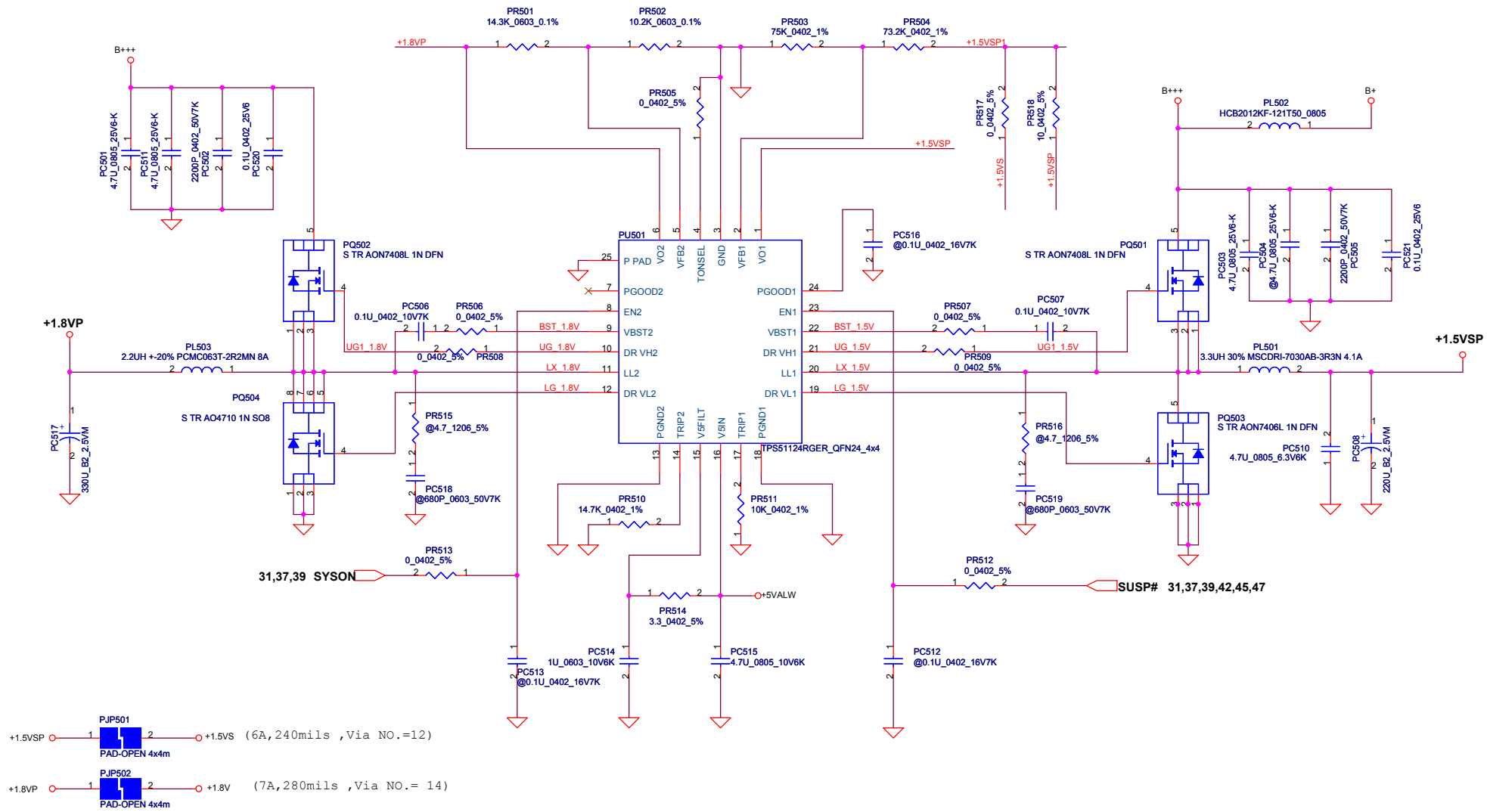


| Security Classification | Compal Secret Data | | |
|---|---|---|---|
| Issued Date | 2007/05/29 | Deciphered Date | 2008/05/29 |

THIS SHEET OF ENGINEERING DRAWING IS THE PROPRIETARY PROPERTY OF COMPAL ELECTRONICS, INC. AND CONTAINS CONFIDENTIAL AND TRADE SECRET INFORMATION. THIS SHEET MAY NOT BE TRANSFERED FROM THE CUSTODY OF THE COMPETENT DIVISION OF R&D DEPARTMENT EXCEPT AS AUTHORIZED BY COMPAL ELECTRONICS, INC. NEITHER THIS SHEET NOR THE INFORMATION IT CONTAINS MAY BE USED BY OR DISCLOSED TO ANY THIRD PARTY WITHOUT PRIOR WRITTEN CONSENT OF COMPAL ELECTRONICS, INC.

**Compal Electronics, Inc.**

Title: **1.5VSP/1.8VP**

Size | Document Number: *Montevina Consumer Discrete* | Rev 0.1

Date: Monday, February 16, 2009 | Sheet 44 of 51

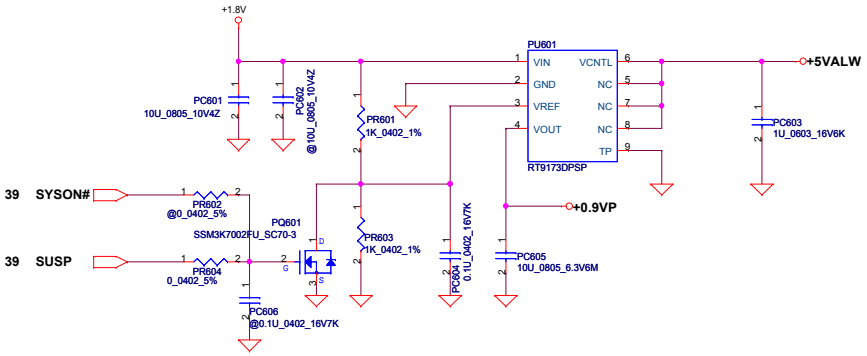


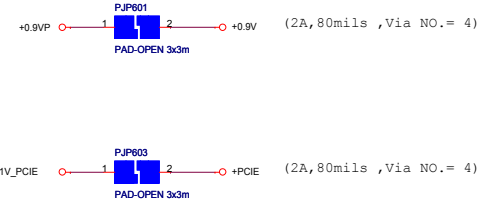


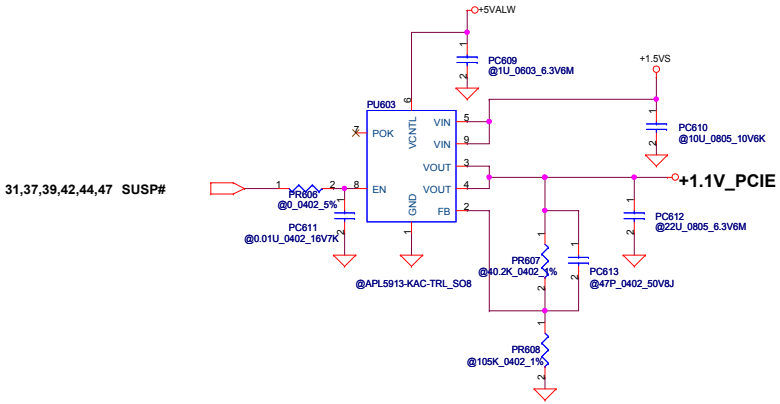


| Security Classification | Compal Secret Data | | |
|---|---|---|---|
| Issued Date | 2006/11/23 | Deciphered Date | 2007/11/23 |

THIS SHEET OF ENGINEERING DRAWING IS THE PROPRIETARY PROPERTY OF COMPAL ELECTRONICS, INC. AND CONTAINS CONFIDENTIAL AND TRADE SECRET INFORMATION. THIS SHEET MAY NOT BE TRANSFERED FROM THE CUSTODY OF THE COMPETENT DIVISION OF R&D DEPARTMENT EXCEPT AS AUTHORIZED BY COMPAL ELECTRONICS, INC. NEITHER THIS SHEET NOR THE INFORMATION IT CONTAINS MAY BE USED BY OR DISCLOSED TO ANY THIRD PARTY WITHOUT PRIOR WRITTEN CONSENT OF COMPAL ELECTRONICS, INC.

**Compal Electronics, Inc.**

Title: *0.9VP/1.1V_PCIE*

Size | Document Number: *LA-4102P Blade discrete* | Rev: 0.1

Date: Monday, February 16, 2009 | Sheet 45 of 51

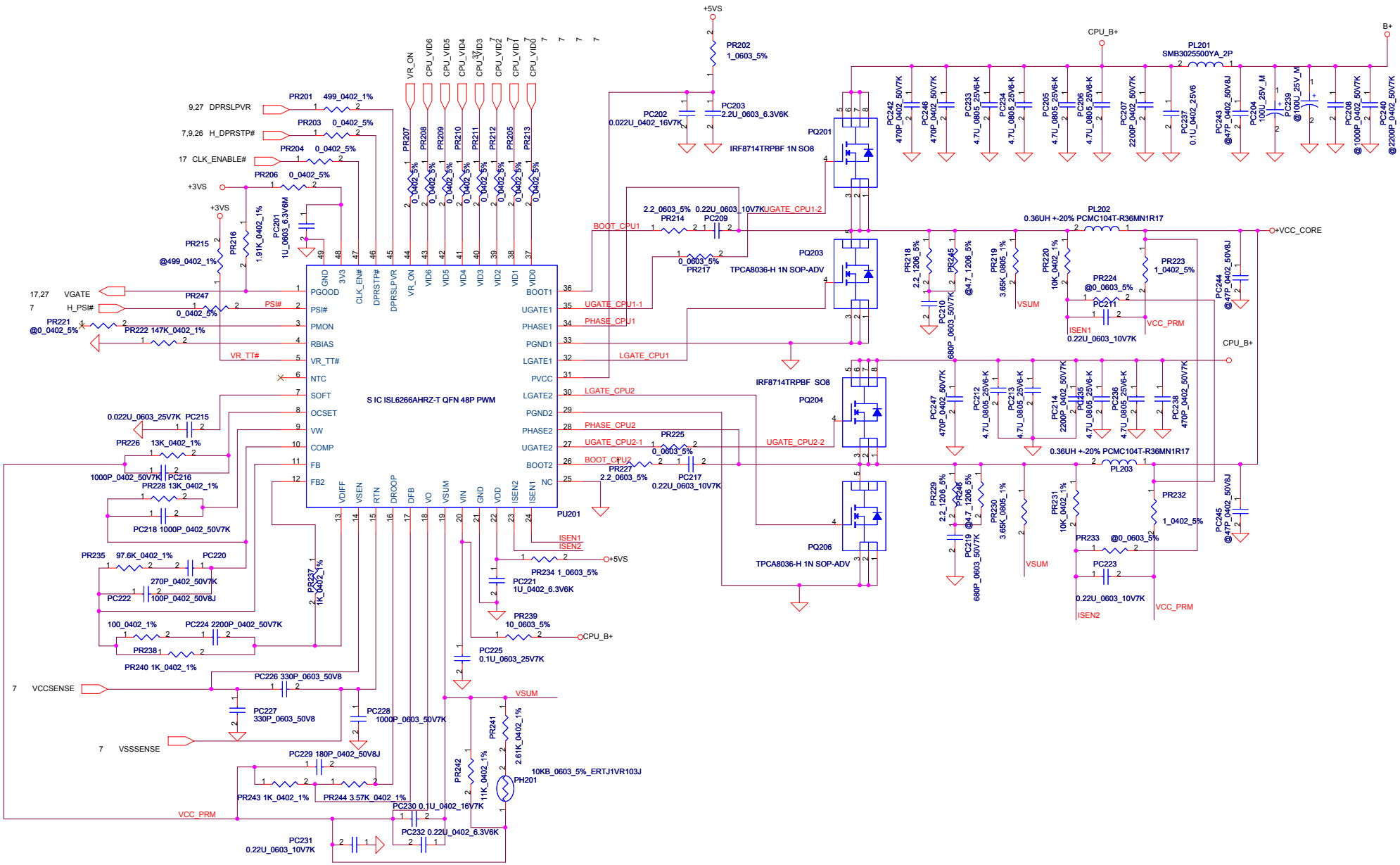


THIS SHEET OF ENGINEERING DRAWING IS THE PROPRIETARY PROPERTY OF COMPAL ELECTRONICS, INC. AND CONTAINS CONFIDENTIAL AND TRADE SECRET INFORMATION. THIS SHEET MAY NOT BE TRANSFERED FROM THE CUSTODY OF THE COMPETENT DIVISION OF R&D DEPARTMENT EXCEPT AS AUTHORIZED BY COMPAL ELECTRONICS, INC. NEITHER THIS SHEET NOR THE INFORMATION IT CONTAINS MAY BE USED BY OR DISCLOSED TO ANY THIRD PARTY WITHOUT PRIOR WRITTEN CONSENT OF COMPAL ELECTRONICS, INC.

**Compal Electronics, Inc.**

| | | |
|---|---|---|
| Title | +CPU_CORE | |
| Size Custom | Document Number | Rev 0.1 |
| Date: Monday, February 16, 2009 | Sheet 46 of 51 | |

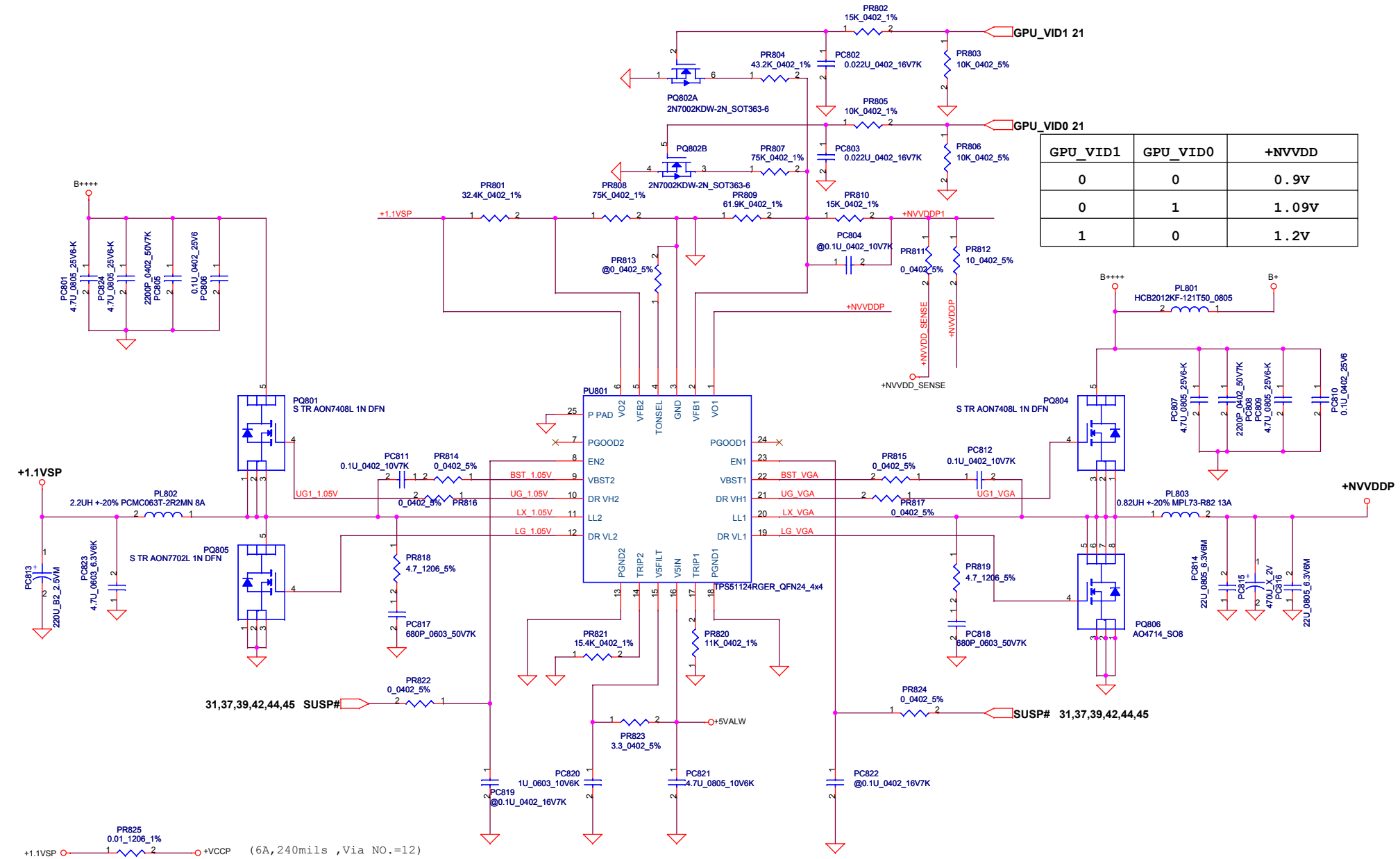


| GPU_VID1 | GPU_VID0 | +NVVDD |
|---|---|---|
| 0 | 0 | 0.9V |
| 0 | 1 | 1.09V |
| 1 | 0 | 1.2V |

| Security Classification | Compal Secret Data | | |
|---|---|---|---|
| Issued Date | 2007/05/29 | Deciphered Date | 200810/11 |

THIS SHEET OF ENGINEERING DRAWING IS THE PROPRIETARY PROPERTY OF COMPAL ELECTRONICS, INC. AND CONTAINS CONFIDENTIAL AND TRADE SECRET INFORMATION. THIS SHEET MAY NOT BE TRANSFERED FROM THE CUSTODY OF THE COMPETENT DIVISION OF R&D DEPARTMENT EXCEPT AS AUTHORIZED BY COMPAL ELECTRONICS, INC. NEITHER THIS SHEET NOR THE INFORMATION IT CONTAINS MAY BE USED BY OR DISCLOSED TO ANY THIRD PARTY WITHOUT PRIOR WRITTEN CONSENT OF COMPAL ELECTRONICS, INC.

**Compal Electronics, Inc.**

Title: **+1.05V_VCCP/VGA_CORE**

Size | Document Number: LA-4112P | Rev: 0.1

Date: Monday, February 16, 2009 | Sheet 47 of 51

# Version Change List ( P. I. R. List ) for Power Circuit

| Item | Page # | Title | Date | Request Owner | Issue Description | Solution Description | Rev. |
|---|---|---|---|---|---|---|---|
| | | | | | | | |

THIS SHEET OF ENGINEERING DRAWING IS THE PROPRIETARY PROPERTY OF COMPAL ELECTRONICS, INC. AND CONTAINS CONFIDENTIAL AND TRADE SECRET INFORMATION. THIS SHEET MAY NOT BE TRANSFERED FROM THE CUSTODY OF THE COMPETENT DIVISION OF R&D DEPARTMENT EXCEPT AS AUTHORIZED BY COMPAL ELECTRONICS, INC. NEITHER THIS SHEET NOR THE INFORMATION IT CONTAINS MAY BE USED BY OR DISCLOSED TO ANY THIRD PARTY WITHOUT PRIOR WRITTEN CONSENT OF COMPAL ELECTRONICS, INC.

| | | | |
|---|---|---|---|
| Security Classification | Compal Secret Data | | |
| Issued Date | 2007/08/02 | Deciphered Date | 2008/08/02 |

**Compal Electronics, Inc.**

Title: **Power Changed-List History-1**

Size: Custom | Document Number: LA-4111P | Rev: 0.1

Date: Thursday, February 12, 2009 | Sheet 48 of 51

| Item | Fixed Issue (Reason for change) | PAGE | Modify List | Date | Phase |
|---|---|---|---|---|---|
| 1 | CardReader clock issue | 17 | Using USB_0 for CLK_48M_CR | 2008/10/08 | SI-1 |
| 2 | Debug Card issue | 31 | Connect PLT_RST# to JP7.A17 | 2008/10/08 | SI-1 |
| 3 | delete VGA external thermal sensor layout location for layout space limitation | 29 | Del U6,C348,C350 | 2008/10/08 | SI-1 |
| 4 | Add Audio board | 34 | Add JAUDIO connecter for audio board | 2008/10/08 | SI-1 |
| 5 | delete VGA JTAG for layou space limitation | 29 | Delete T47,T48,T49,T50,T51 | 2008/10/08 | SI-1 |
| 6 | Cap board issue | 38 | Change Cap board power rail to +3VL | 2008/10/08 | SI-1 |
| 7 | Change JFPR to 6 pin connector | 35 | change JFPR | 2008/10/08 | SI-1 |
| 8 | Change FAN control circuit to voltage control | 6 | Add U51,D17,R50,C41 | 2008/10/08 | SI-1 |
| 9 | Delete HDA SSC | 26 | Remove U44 for layout spacing | 2008/10/08 | SI-1 |
| 10 | For PR mini card connector | 31 | Add R2252 -- R2261 | 2008/10/08 | SI-1 |
| 11 | PA/PR CardReader LED | 32 | D72 for PA, D71 for PR | 2008/10/08 | SI-1 |
| 12 | EMI request | 33 | Change R2205 to L76 | 2008/10/08 | SI-1 |
| 13 | change MIC to 2pin and add SPK connector | 34 | | 2008/10/08 | SI-1 |
| 14 | Speaker L & R reverse | 34 | | 2008/11/20 | SI-2 |
| 15 | JFPR change to 4 pin | 40 | Add U58,C2265 | 2008/11/20 | SI-2 |
| 16 | add buffer on detect pin for certification item 7-12 | 34 | | 2008/11/20 | SI-2 |
| 17 | *Bom Error [ Bug: BT led fail]* | *38* | *Change D20's Part number to SCA00000G00* | 2008/12/10 | PV |
| 18 | *Realtek suggest us to change Cap value* | *30* | *Change C2193 value from 0.1uF to 1uF* | 2008/12/10 | PV |
| 19 | *Slove WWLAN Noise : Add Cap X4 [to GND]* | *26* | *C499 and C2130 default mount, Add C2266 and C2267 [12 PF]* | 2008/12/10 | PV |
| 20 | *Slove WWLAN Noise:Add Cap,change R191val* | *37* | *Add C2268 [22PF] on R191.2 to GND and R191 change to 47 ohm* | 2008/12/10 | PV |
| 21 | *Slove WWLAN Noise:C356,C357 default mou* | *21* | *C356 and C357 default mount* | 2008/12/10 | PV |
| 22 | *Slove SMT issue* | *37* | *Change U30 FOOTPRINT [fromKB926QFA1_LQFP128_14X14 change to ECE5028-NU_VTQFP128_14X14]* | | PV |
| 23 | *Slove SMT issue* | *37* | *Change JKB FOOTPRINT [from ACES_85202-24051_24P change to ACES_85202-24051_24P-S]* | 2008/12/10 | PV |
| 24 | *Slove ESD issue* | *26* | *ADD C2269 [0.1uF] on BATT1.1 trace (pin 1)* | 2008/12/17 | PV |
| 25 | *Slove ESD issue* | *33* | *Add one Diode [D73] on MIC_EXTR, MIC_EXTL (near chip side)* | 2008/12/17 | PV |
| 26 | *Slove ESD issue* | *33* | *Change cap value [ C2270,C2271,C2272,C2273] to 0.1uF* | 2008/12/17 | PV |
| 27 | *Slove Audio issue* | *34* | *Change cap value to 2.2uF [C2239,C2240]* | 2008/12/17 | PV |
| 28 | *Slove non-RoHS Part* | *30* | *Change C2157,C2160,C2215 and C2217 Part number [ from SE070104Z00 to SE070104Z80]* | 2008/12/17 | PV |

| Security Classification | Compal Secret Data | | |
|---|---|---|---|
| Issued Date | 2008/11/04 | Deciphered Date | 2008/11/04 |

THIS SHEET OF ENGINEERING DRAWING IS THE PROPRIETARY PROPERTY OF COMPAL ELECTRONICS, INC. AND CONTAINS CONFIDENTIAL AND TRADE SECRET INFORMATION. THIS SHEET MAY NOT BE TRANSFERED FROM THE CUSTODY OF THE COMPETENT DIVISION OF R&D DEPARTMENT EXCEPT AS AUTHORIZED BY COMPAL ELECTRONICS, INC. NEITHER THIS SHEET NOR THE INFORMATION IT CONTAINS MAY BE USED BY OR DISCLOSED TO ANY THIRD PARTY WITHOUT PRIOR WRITTEN CONSENT OF COMPAL ELECTRONICS, INC.

**Compal Electronics, Inc.**

Title: **HW PIR**

Size | Document Number: *LA-4731P Rhett discrete* | Rev 0.1

Date: Thursday, February 12, 2009 | Sheet 49 of 51

| Item | Fixed Issue (Reason for change) | PAGE | Modify List | Date | Phase |
|---|---|---|---|---|---|
| 29 | Slove ESD ISSUE | 30 | ADD R2262 [4.7K] and C2274 [0.01 uF] [Default unmount] | 2008/12/17 | PV |
| 30 | Slov Audio EISSUE | 34 | Change JAUDIO [Audio conn] pin defination | 2008/12/17 | PV |
| 31 | Slove Audio ISSUE | 33 | DEL R2204 | 2008/12/17 | PV |
| 32 | Slove Q Die and E Die | | Just use Qim and Hynix VRAM on PV | | |
| 33 | ESD Request | 38 | ADD C2275,D74,D75 and D76 | | |
| 34 | ESD Request | 34 | Modify D66 location | | |
| 35 | ESD Request | 18 | Do not moundt D5,D6 and D7 | | |
| 36 | ESD Request | 30 | Do not mount D62 | | |
| 37 | ESD Request | 35 | Do not mount D45 and D46 | | |
| 38 | ESD Request | 35 | Do not mount D47 | | |
| 38 | | | | | |
| 38 | | | | | |


| Security Classification | Compal Secret Data | | |
|---|---|---|---|
| Issued Date | 2008/11/04 | Deciphered Date | 2008/11/04 |

THIS SHEET OF ENGINEERING DRAWING IS THE PROPRIETARY PROPERTY OF COMPAL ELECTRONICS, INC. AND CONTAINS CONFIDENTIAL AND TRADE SECRET INFORMATION. THIS SHEET MAY NOT BE TRANSFERED FROM THE CUSTODY OF THE COMPETENT DIVISION OF R&D DEPARTMENT EXCEPT AS AUTHORIZED BY COMPAL ELECTRONICS, INC. NEITHER THIS SHEET NOR THE INFORMATION IT CONTAINS MAY BE USED BY OR DISCLOSED TO ANY THIRD PARTY WITHOUT PRIOR WRITTEN CONSENT OF COMPAL ELECTRONICS, INC.


Compal Electronics, Inc.

Title: HW PIR

Size | Document Number: LA-4731P Rhett discrete | Rev: 0.1

Date: Thursday, February 12, 2009 | Sheet 50 of 51

| Item | Fixed Issue (Reason for change) | PAGE | Modify List | Date | Phase |
|---|---|---|---|---|---|
| 1 | | | | | |
| 2 | | | | | |
| 3 | | | | | |
| 4 | | | | | |
| 5 | | | | | |
| 6 | | | | | |
| 7 | | | | | |
| 8 | | | | | |
| 9 | | | | | |
| 10 | | | | | |
| 11 | | | | | |
| 12 | | | | | |
| 13 | | | | | |
| 14 | | | | | |
| 15 | | | | | |
| 16 | | | | | |
| 17 | | | | | |
| 18 | | | | | |
| 19 | | | | | |
| 20 | | | | | |
| 21 | | | | | |
| 22 | | | | | |
| 23 | | | | | |
| 24 | | | | | |
| 25 | | | | | |
| 26 | | | | | |
| 27 | | | | | |
| 28 | | | | | |

| Security Classification | Compal Secret Data | | |
|---|---|---|---|
| Issued Date | 2008/11/04 | Deciphered Date | 2008/11/04 |

THIS SHEET OF ENGINEERING DRAWING IS THE PROPRIETARY PROPERTY OF COMPAL ELECTRONICS, INC. AND CONTAINS CONFIDENTIAL AND TRADE SECRET INFORMATION. THIS SHEET MAY NOT BE TRANSFERED FROM THE CUSTODY OF THE COMPETENT DIVISION OF R&D DEPARTMENT EXCEPT AS AUTHORIZED BY COMPAL ELECTRONICS, INC. NEITHER THIS SHEET NOR THE INFORMATION IT CONTAINS MAY BE USED BY OR DISCLOSED TO ANY THIRD PARTY WITHOUT PRIOR WRITTEN CONSENT OF COMPAL ELECTRONICS, INC.

**Compal Electronics, Inc.**

Title: **HW PIR**

Size | Document Number: *LA-4731P Rhett discrete* | Rev: 0.1

Date: Thursday, February 12, 2009 | Sheet 51 of 51