Compal confidential

JBK00 LA-4091P Schematics Document

Mobile AMD S1G2 CPU with ATI RS780M & SB700 core logic

2007-10-30

REV:0.2

Security Classification	Compal Secret Data		
Issued Date	2007/08/02	Deciphered Date	2008/08/02

THIS SHEET OF ENGINEERING DRAWING IS THE PROPRIETARY PROPERTY OF COMPAL ELECTRONICS, INC. AND CONTAINS CONFIDENTIAL AND TRADE SECRET INFORMATION. THIS SHEET MAY NOT BE TRANSFERED FROM THE CUSTODY OF THE COMPETENT DIVISION OF R&D DEPARTMENT EXCEPT AS AUTHORIZED BY COMPAL ELECTRONICS, INC. NEITHER THIS SHEET NOR THE INFORMATION IT CONTAINS MAY BE USED BY OR DISCLOSED TO ANY THIRD PARTY WITHOUT PRIOR WRITTEN CONSENT OF COMPAL ELECTRONICS, INC.

Compal Electronics, Inc.

Title: *Cover Sheet*

Size: Custom | Document Number: *LA-4091P* | Rev: 0.1

Date: Thursday, November 08, 2007 | Sheet 1 of 53

Compal
confidential

Consumer AMD UMA 17"

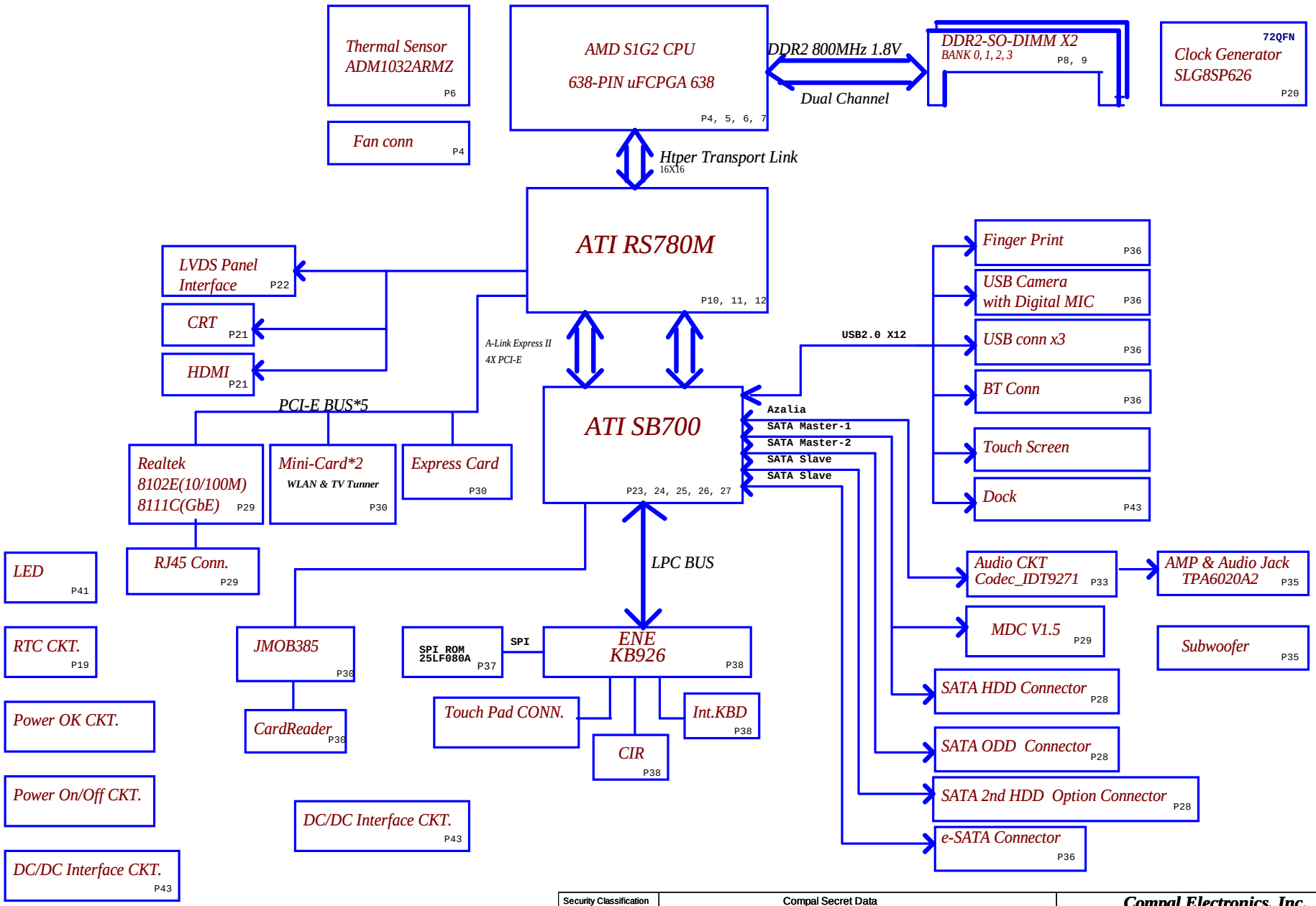

Security Classification	Compal Secret Data		
Issued Date	2007/08/02	Deciphered Date	2008/08/02

THIS SHEET OF ENGINEERING DRAWING IS THE PROPRIETARY PROPERTY OF COMPAL ELECTRONICS, INC. AND CONTAINS CONFIDENTIAL AND TRADE SECRET INFORMATION. THIS SHEET MAY NOT BE TRANSFERED FROM THE CUSTODY OF THE COMPETENT DIVISION OF R&D DEPARTMENT EXCEPT AS AUTHORIZED BY COMPAL ELECTRONICS, INC. NEITHER THIS SHEET NOR THE INFORMATION IT CONTAINS MAY BE USED BY OR DISCLOSED TO ANY THIRD PARTY WITHOUT PRIOR WRITTEN CONSENT OF COMPAL ELECTRONICS, INC.

Compal Electronics, Inc.

Title: **Block Diagram**

Size	Document Number	Rev
Custom	LA-4091P	0.1

Date: Thursday, November 08, 2007 | Sheet 2 of 53

Voltage Rails

O MEANS ON X MEANS OFF

power plane / State	+B +3VL	+5VALW +3VALW +1.2VALW	+1.8V +0.9V	+5VS +3VS +2.5VS +1.8VS +1.5VS +1.1VS +VGA_CORE +1.2V_HT +CPU_CORE_NB +CPU_CORE_0 +CPU_CORE_1
S0	O	O	O	O
S1	O	O	O	O
S3	O	O	O	X
S5 S4/AC	O	O	X	X
S5 S4/ Battery only	O	X	X	X
S5 S4/AC & Battery don't exist	X	X	X	X

Symbol Note :

: means Digital Ground

: means Analog Ground

@ : means just reserve , no build
DEBUG@ : means just reserve for debug.

Layout Notes

UMA@ : means for RS780M.

I2C / SMBUS ADDRESSING

DEVICE	HEX	ADDRESS
DDR SO-DIMM 0	A0	10100000
DDR SO-DIMM 1	A4	10100100
CLOCK GENERATOR (EXT.)	D2	11010010
ACCELEROMETER	3A	00111010

EC SM Bus1 address

Device	HEX	Address
Smart Battery	16H	0001 011X b
24C16	A0H	1010 000X b
CPU SIC interface	98H	1001 100X b

EC SM Bus2 address

Device	HEX	Address
ADI1032-2 CPU	9AH	1001 101X b

SMBUS Control Table

	SOURCE	INVERTER	BATT	SERIAL EEPROM	THERMAL SENSOR CPU & ADM1032	SODIMM I / II	CLK CHIP	MINI CARD Slot 2	LCD	HDMI	G-Sensor
SMB_EC_CK1 SMB_EC_DA1	KB926	X	V	V	X	X	X	X	X	X	X
SMB_EC_CK2 SMB_EC_DA2	KB926	X	X	X	V	X	X	X	X	X	X
I2C_CLK I2C_DATA	RS780M	X	X	X	X	X	X	X	V	X	X
DDC_CLK0 DDC_DATA0	RS780M	X	X	X	X	X	X	X	X	V	X
DDC_CLK1 DDC_DATA1	RS780M	X	X	X	X	X	X	X	X	X	X
SCL0 SDA0	SB700	X	X	X	X	V	V	X	X	X	V
SCL1 SDA1	SB700	X	X	X	X	X	X	V	X	X	X
SCL2 SDA2	SB700	X	X	X	X	X	X	X	X	X	X
SCL3 SDA3	SB700	X	X	X	X	X	X	X	X	X	X

Security Classification	Compal Secret Data		
Issued Date	2007/08/02	Deciphered Date	2008/08/02

THIS SHEET OF ENGINEERING DRAWING IS THE PROPRIETARY PROPERTY OF COMPAL ELECTRONICS, INC. AND CONTAINS CONFIDENTIAL AND TRADE SECRET INFORMATION. THIS SHEET MAY NOT BE TRANSFERED FROM THE CUSTODY OF THE COMPETENT DIVISION OF R&D DEPARTMENT EXCEPT AS AUTHORIZED BY COMPAL ELECTRONICS, INC. NEITHER THIS SHEET NOR THE INFORMATION IT CONTAINS MAY BE USED BY OR DISCLOSED TO ANY THIRD PARTY WITHOUT PRIOR WRITTEN CONSENT OF COMPAL ELECTRONICS, INC.

Compal Electronics, Inc.

Title: Notes List

Size: Custom | Document Number: LA-4091P | Rev: 0.1

Date: Thursday, November 08, 2007 | Sheet 3 of 53

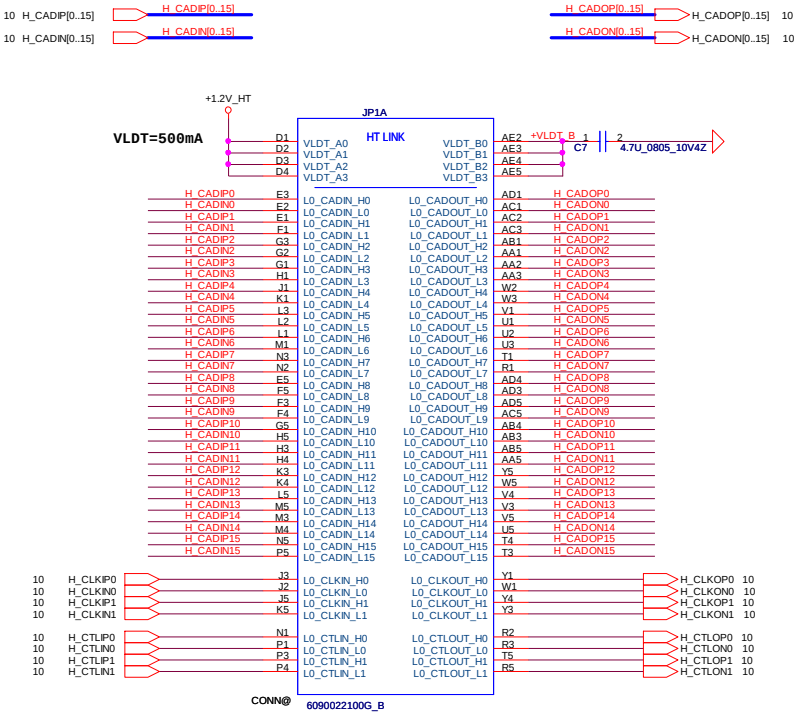

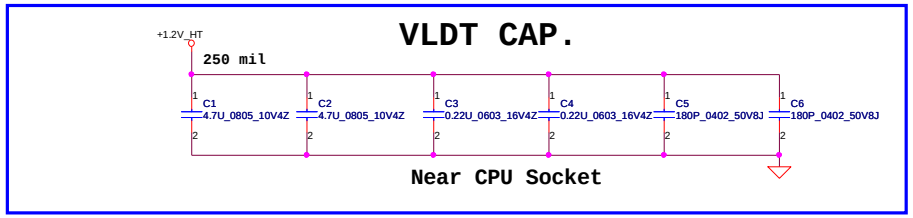

PWM Fan Control circuit

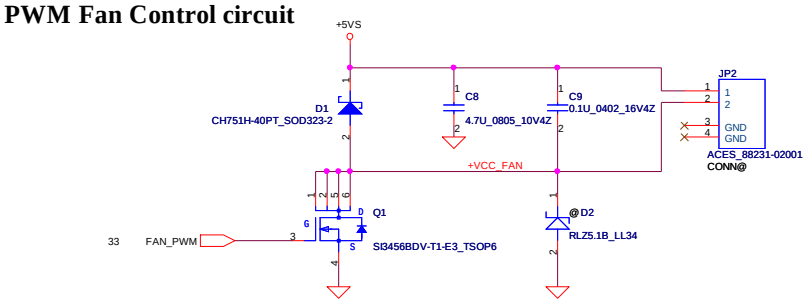

Security Classification	Compal Secret Data		
Issued Date	2007/08/02	Deciphered Date	2008/08/02

THIS SHEET OF ENGINEERING DRAWING IS THE PROPRIETARY PROPERTY OF COMPAL ELECTRONICS, INC. AND CONTAINS CONFIDENTIAL AND TRADE SECRET INFORMATION. THIS SHEET MAY NOT BE TRANSFERED FROM THE CUSTODY OF THE COMPETENT DIVISION OF R&D DEPARTMENT EXCEPT AS AUTHORIZED BY COMPAL ELECTRONICS, INC. NEITHER THIS SHEET NOR THE INFORMATION IT CONTAINS MAY BE USED BY OR DISCLOSED TO ANY THIRD PARTY WITHOUT PRIOR WRITTEN CONSENT OF COMPAL ELECTRONICS, INC.

Compal Electronics, Inc.

Title: **AMD CPU S1G2 HT I/F**

Size: Custom | Document Number: LA-4091P | Rev: 0.1

Date: Thursday, November 08, 2007 | Sheet 4 of 53

Processor DDR2 Memory Interface

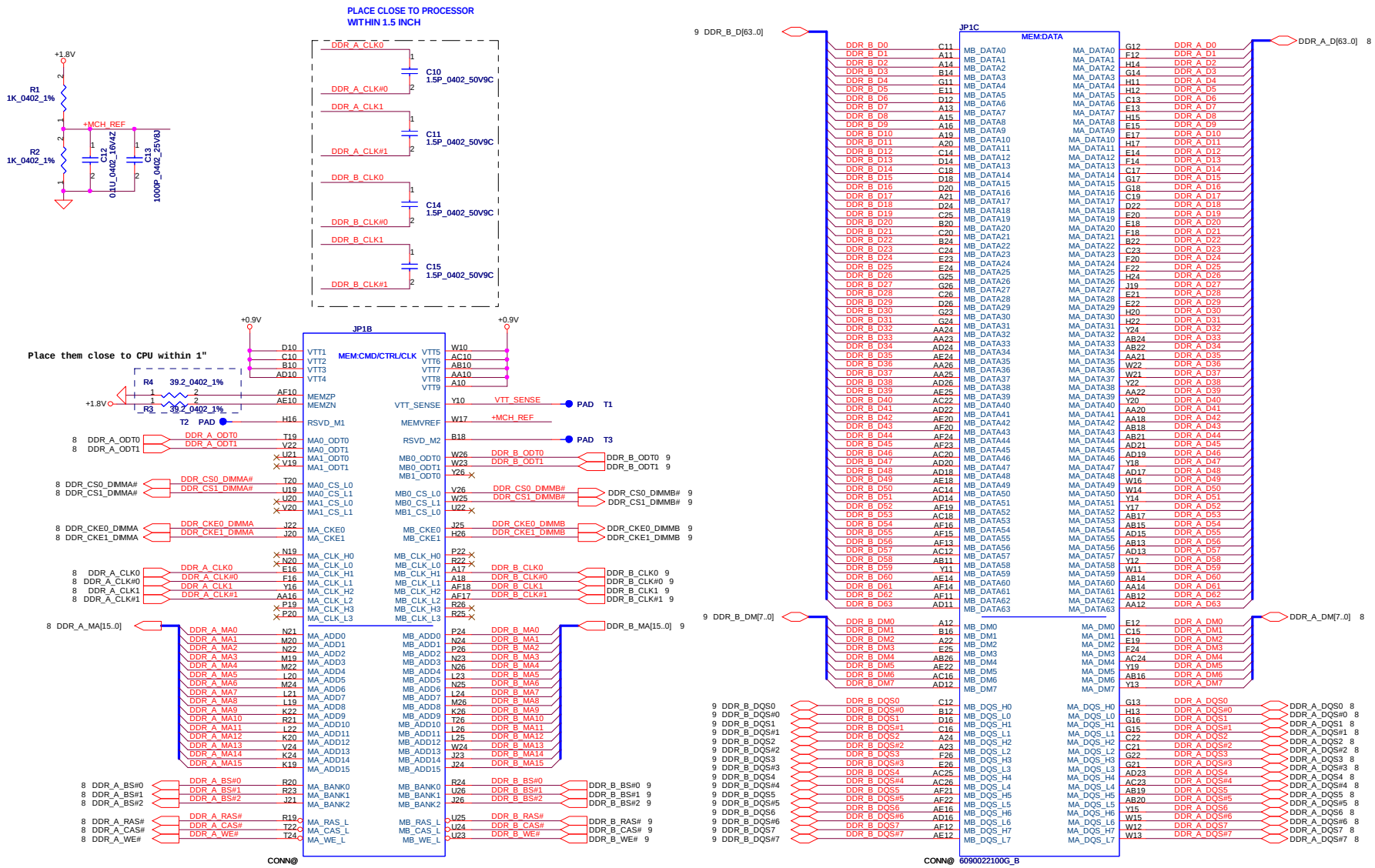

Security Classification	Compal Secret Data		
Issued Date	2007/08/02	Deciphered Date	2008/08/02

THIS SHEET OF ENGINEERING DRAWING IS THE PROPRIETARY PROPERTY OF COMPAL ELECTRONICS, INC. AND CONTAINS CONFIDENTIAL AND TRADE SECRET INFORMATION. THIS SHEET MAY NOT BE TRANSFERED FROM THE CUSTODY OF THE COMPETENT DIVISION OF R&D DEPARTMENT EXCEPT AS AUTHORIZED BY COMPAL ELECTRONICS, INC. NEITHER THIS SHEET NOR THE INFORMATION IT CONTAINS MAY BE USED BY OR DISCLOSED TO ANY THIRD PARTY WITHOUT PRIOR WRITTEN CONSENT OF COMPAL ELECTRONICS, INC.

Compal Electronics, Inc.

Title: **AMD CPU S1G2 DDRII I/F**

Size	Document Number	Rev
Custom	LA-4091P	0.1

Date: Thursday, November 08, 2007 | Sheet 5 of 53

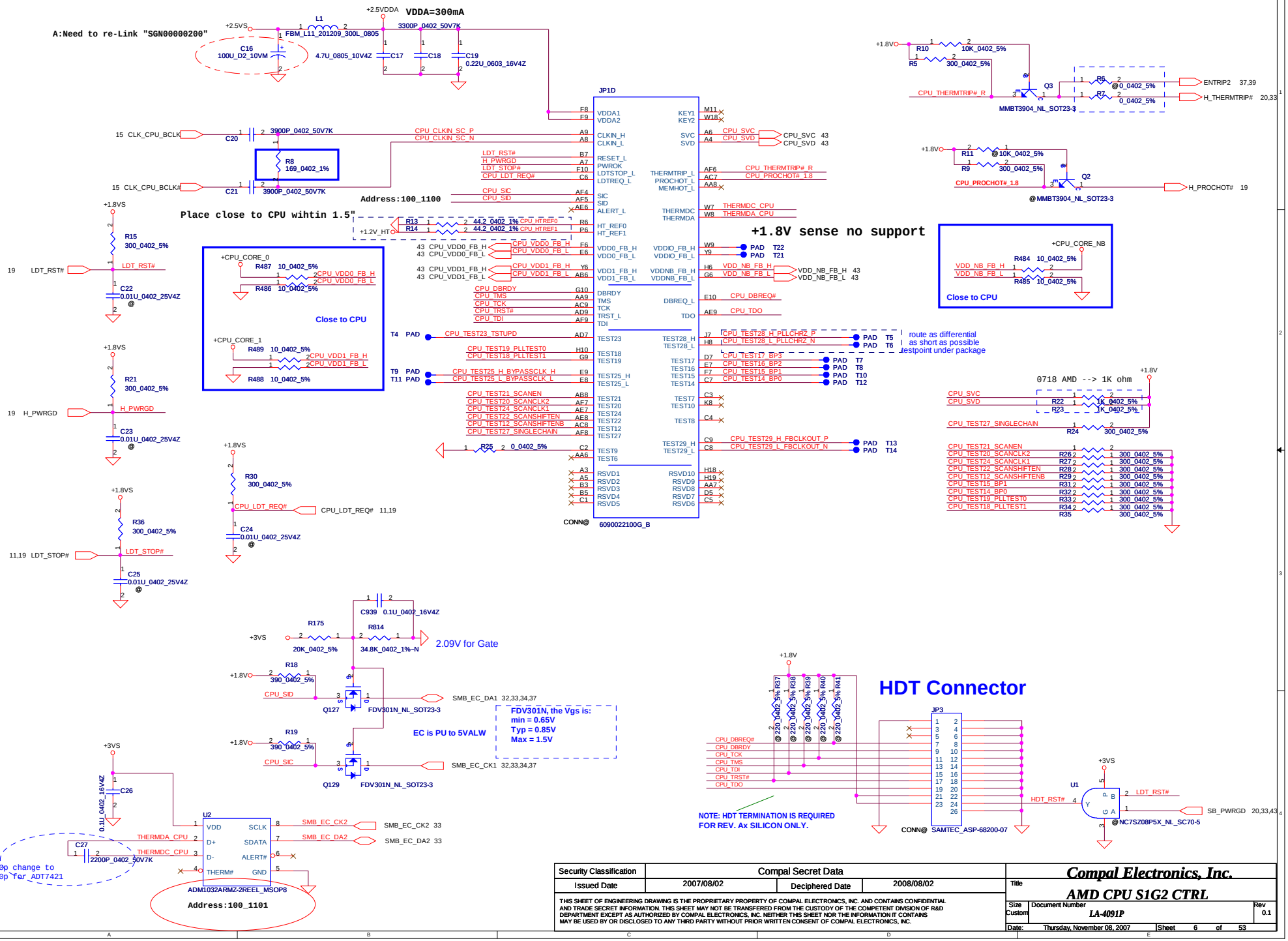

Security Classification	Compal Secret Data		
Issued Date	2007/08/02	Deciphered Date	2008/08/02

THIS SHEET OF ENGINEERING DRAWING IS THE PROPRIETARY PROPERTY OF COMPAL ELECTRONICS, INC. AND CONTAINS CONFIDENTIAL AND TRADE SECRET INFORMATION. THIS SHEET MAY NOT BE TRANSFERED FROM THE CUSTODY OF THE COMPETENT DIVISION OF R&D DEPARTMENT EXCEPT AS AUTHORIZED BY COMPAL ELECTRONICS, INC. NEITHER THIS SHEET NOR THE INFORMATION IT CONTAINS MAY BE USED BY OR DISCLOSED TO ANY THIRD PARTY WITHOUT PRIOR WRITTEN CONSENT OF COMPAL ELECTRONICS, INC.

Compal Electronics, Inc.

Title: **AMD CPU S1G2 CTRL**

Size: Custom | Document Number: LA-4091P | Rev: 0.1

Date: Thursday, November 08, 2007 | Sheet 6 of 53

VDD(+CPU_CORE) decoupling.

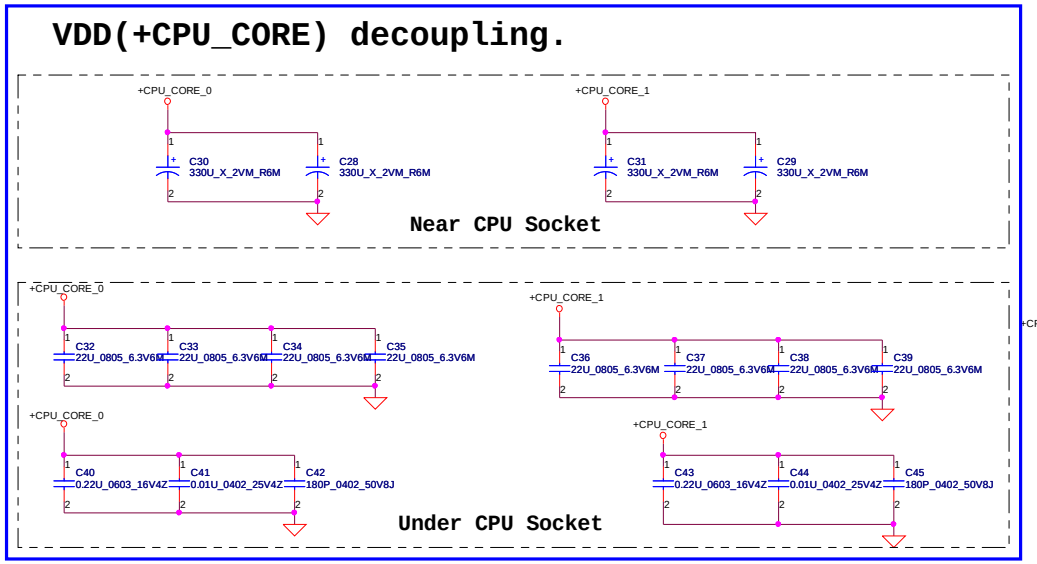

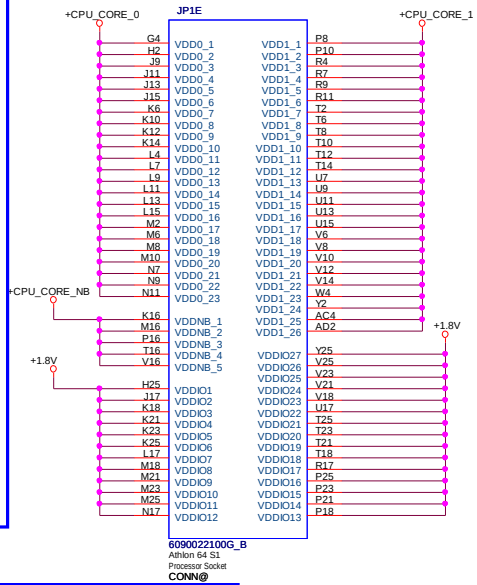

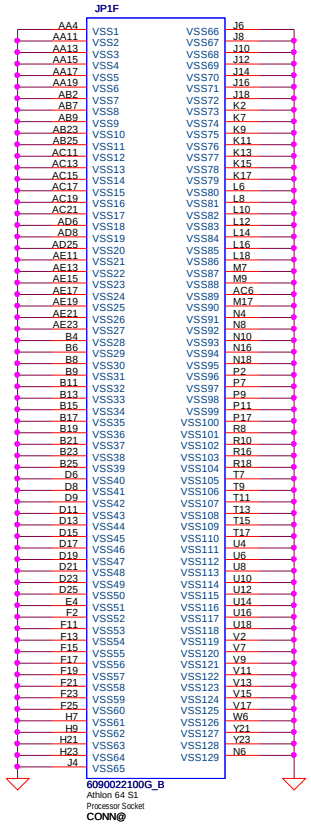

VDDIO decoupling.

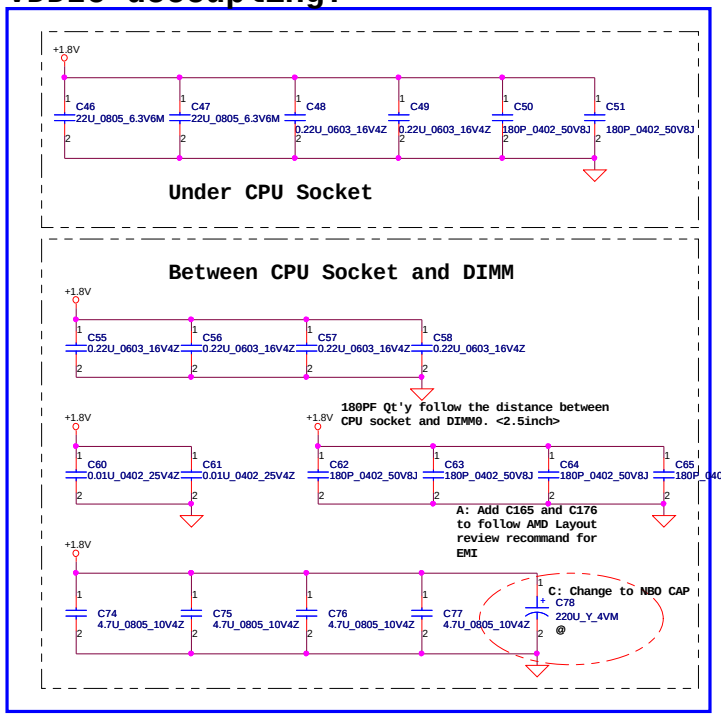

+CPU_CORE_NB decoupling.

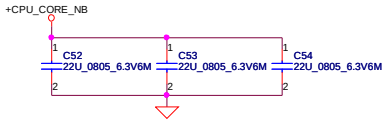

VTT decoupling.

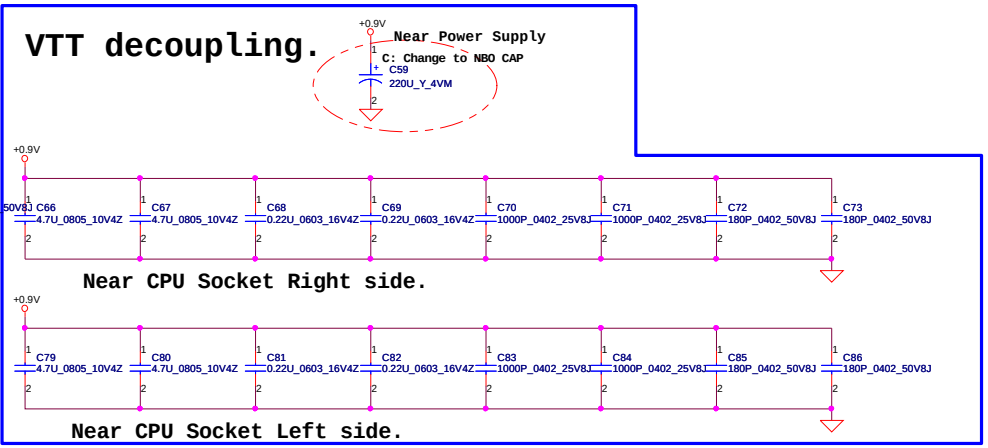

Security Classification	Compal Secret Data		
Issued Date	2007/08/02	Deciphered Date	2008/08/02

THIS SHEET OF ENGINEERING DRAWING IS THE PROPRIETARY PROPERTY OF COMPAL ELECTRONICS, INC. AND CONTAINS CONFIDENTIAL AND TRADE SECRET INFORMATION. THIS SHEET MAY NOT BE TRANSFERED FROM THE CUSTODY OF THE COMPETENT DIVISION OF R&D DEPARTMENT EXCEPT AS AUTHORIZED BY COMPAL ELECTRONICS, INC. NEITHER THIS SHEET NOR THE INFORMATION IT CONTAINS MAY BE USED BY OR DISCLOSED TO ANY THIRD PARTY WITHOUT PRIOR WRITTEN CONSENT OF COMPAL ELECTRONICS, INC.

Compal Electronics, Inc.

Title: **AMD CPU S1G2 PWR & GND**

Size	Document Number	Rev
Custom	LA-4091P	0.1

Date: Thursday, November 08, 2007 | Sheet 7 of 53

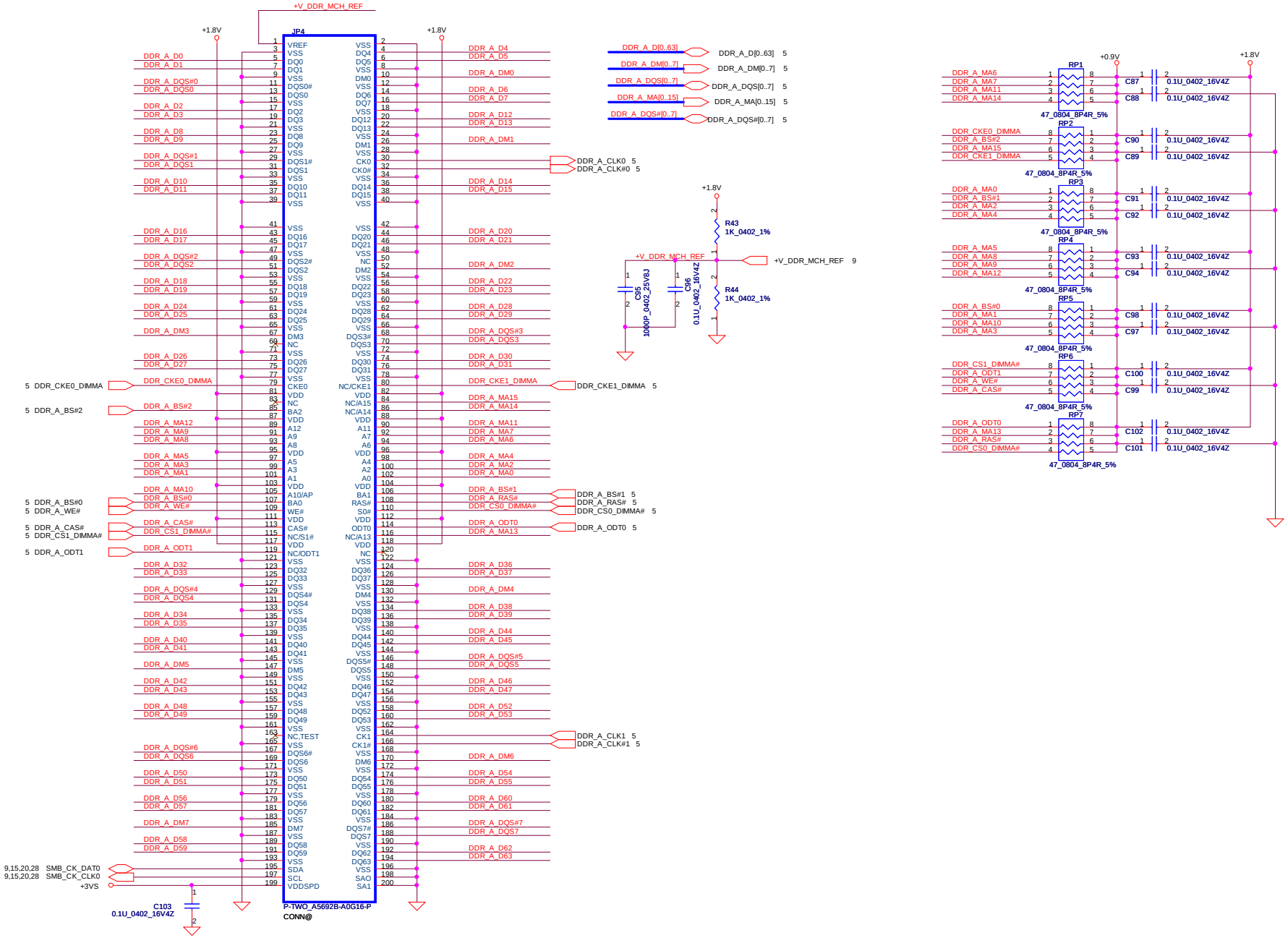

Security Classification	Compal Secret Data		
Issued Date	2007/08/02	Deciphered Date	2008/08/02

THIS SHEET OF ENGINEERING DRAWING IS THE PROPRIETARY PROPERTY OF COMPAL ELECTRONICS, INC. AND CONTAINS CONFIDENTIAL AND TRADE SECRET INFORMATION. THIS SHEET MAY NOT BE TRANSFERED FROM THE CUSTODY OF THE COMPETENT DIVISION OF R&D DEPARTMENT EXCEPT AS AUTHORIZED BY COMPAL ELECTRONICS, INC. NEITHER THIS SHEET NOR THE INFORMATION IT CONTAINS MAY BE USED BY OR DISCLOSED TO ANY THIRD PARTY WITHOUT PRIOR WRITTEN CONSENT OF COMPAL ELECTRONICS, INC.

Compal Electronics, Inc.

Title: **DDRII SO-DIMM 0**

Size: Custom | Document Number: LA-4091P | Rev: 0.1

Date: Thursday, November 08, 2007 | Sheet 8 of 53

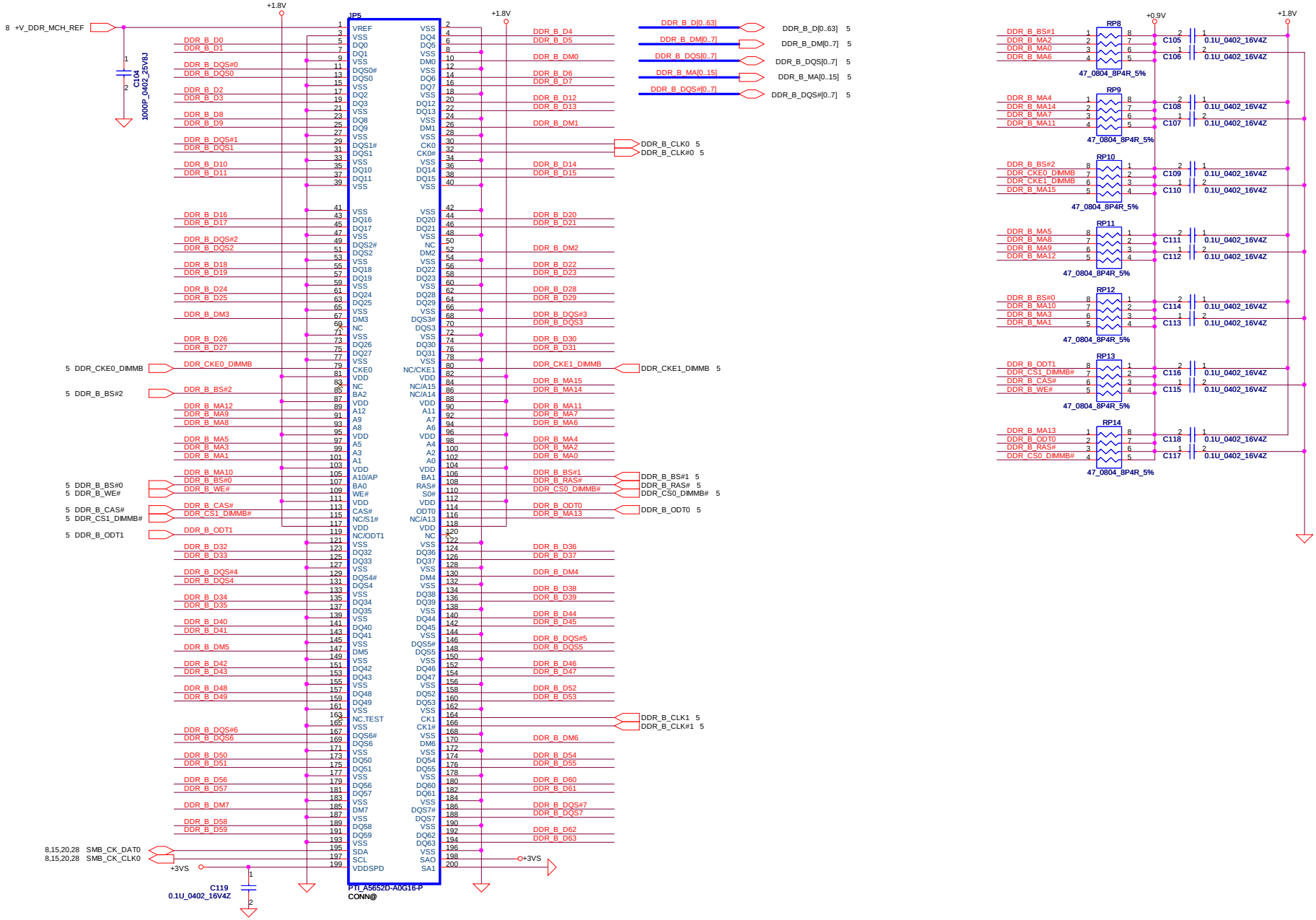

Security Classification	Compal Secret Data		
Issued Date	2007/08/02	Deciphered Date	2008/08/02

THIS SHEET OF ENGINEERING DRAWING IS THE PROPRIETARY PROPERTY OF COMPAL ELECTRONICS, INC. AND CONTAINS CONFIDENTIAL AND TRADE SECRET INFORMATION. THIS SHEET MAY NOT BE TRANSFERED FROM THE CUSTODY OF THE COMPETENT DIVISION OF R&D DEPARTMENT EXCEPT AS AUTHORIZED BY COMPAL ELECTRONICS, INC. NEITHER THIS SHEET NOR THE INFORMATION IT CONTAINS MAY BE USED BY OR DISCLOSED TO ANY THIRD PARTY WITHOUT PRIOR WRITTEN CONSENT OF COMPAL ELECTRONICS, INC.

Compal Electronics, Inc.

Title: **DDRII SO-DIMM 1**

Size	Document Number	Rev
Custom	LA-4091P	0.1

Date: Thursday, November 08, 2007 Sheet 9 of 53

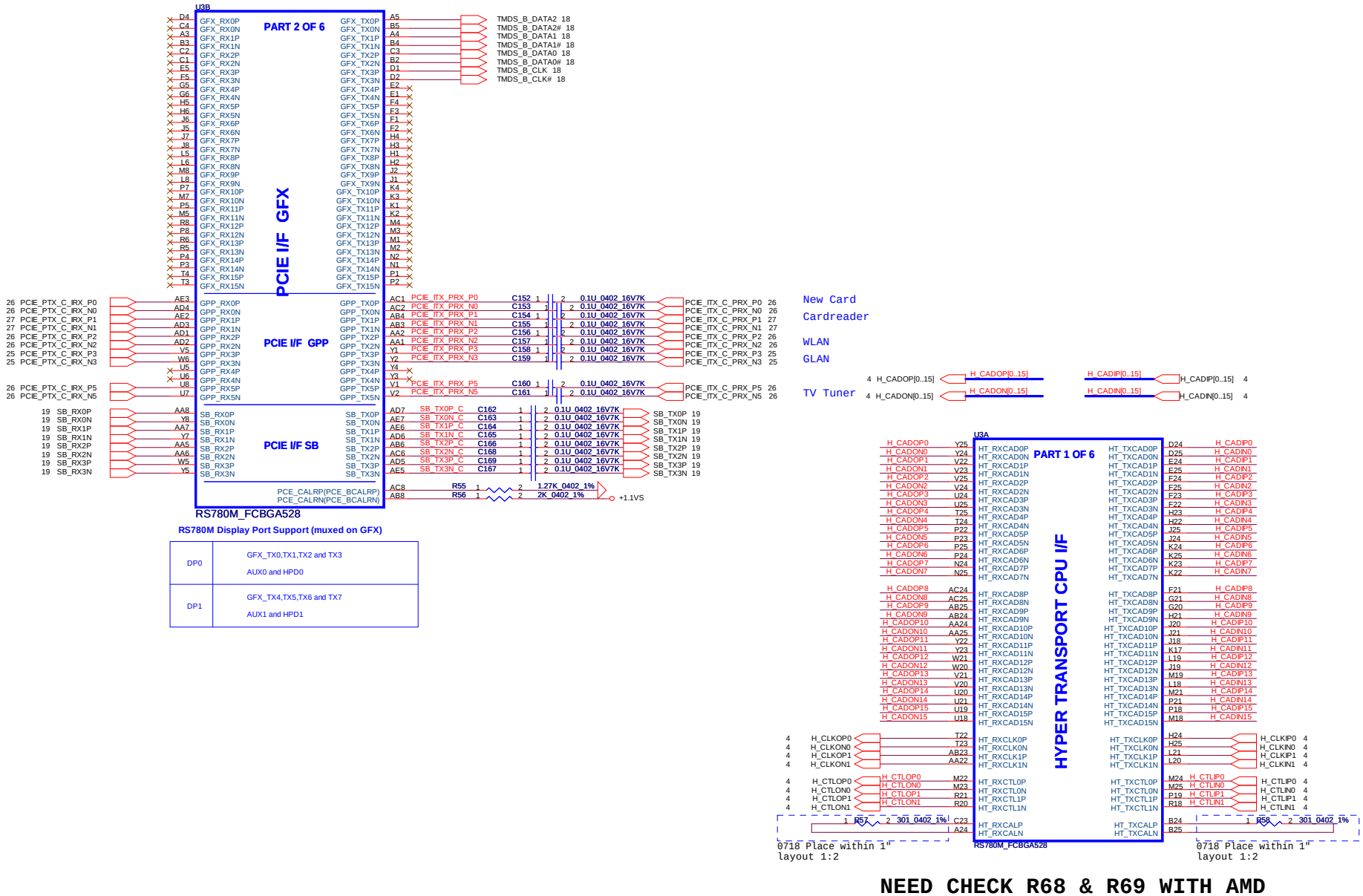

NEED CHECK R68 & R69 WITH AMD

Security Classification	Compal Secret Data		
Issued Date	2007/08/02	Deciphered Date	2008/08/02

THIS SHEET OF ENGINEERING DRAWING IS THE PROPRIETARY PROPERTY OF COMPAL ELECTRONICS, INC. AND CONTAINS CONFIDENTIAL AND TRADE SECRET INFORMATION. THIS SHEET MAY NOT BE TRANSFERED FROM THE CUSTODY OF THE COMPETENT DIVISION OF R&D DEPARTMENT EXCEPT AS AUTHORIZED BY COMPAL ELECTRONICS, INC. NEITHER THIS SHEET NOR THE INFORMATION IT CONTAINS MAY BE USED BY OR DISCLOSED TO ANY THIRD PARTY WITHOUT PRIOR WRITTEN CONSENT OF COMPAL ELECTRONICS, INC.

Compal Electronics, Inc.

Title: **RS780-HT/PCIE**

Size: Custom | Document Number: LA-4091P | Rev: 0.1

Date: Thursday, November 08, 2007 | Sheet 10 of 53

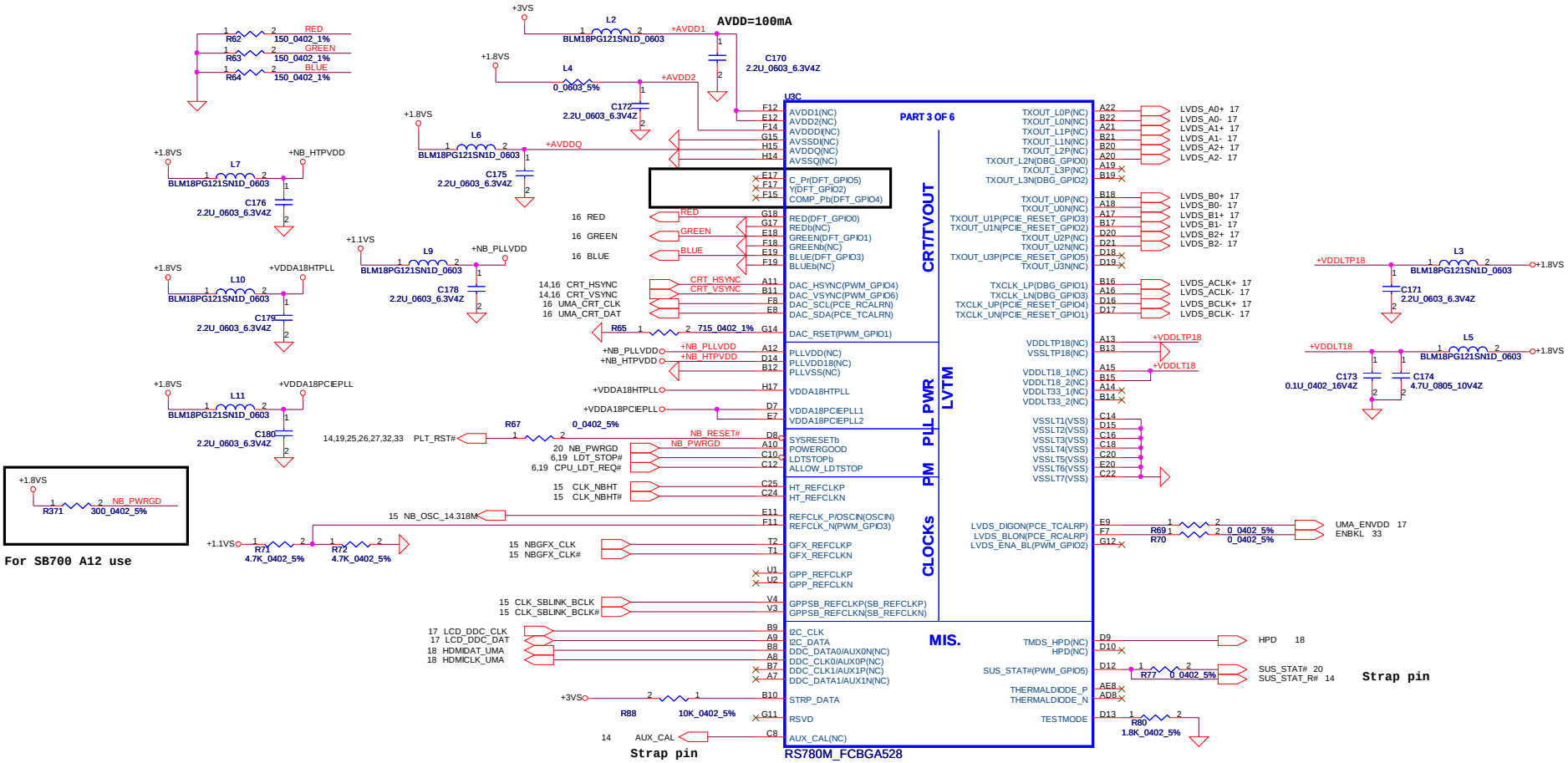

Security Classification	Compal Secret Data		
Issued Date	2007/08/02	Deciphered Date	2008/08/02

THIS SHEET OF ENGINEERING DRAWING IS THE PROPRIETARY PROPERTY OF COMPAL ELECTRONICS, INC. AND CONTAINS CONFIDENTIAL AND TRADE SECRET INFORMATION. THIS SHEET MAY NOT BE TRANSFERED FROM THE CUSTODY OF THE COMPETENT DIVISION OF R&D DEPARTMENT EXCEPT AS AUTHORIZED BY COMPAL ELECTRONICS, INC. NEITHER THIS SHEET NOR THE INFORMATION IT CONTAINS MAY BE USED BY OR DISCLOSED TO ANY THIRD PARTY WITHOUT PRIOR WRITTEN CONSENT OF COMPAL ELECTRONICS, INC.

Compal Electronics, Inc.

Title: **RS780 VEDIO/CLK GEN**

Size: Custom | Document Number: LA-4091P | Rev: 0.1

Date: Thursday, November 08, 2007 | Sheet 11 of 53

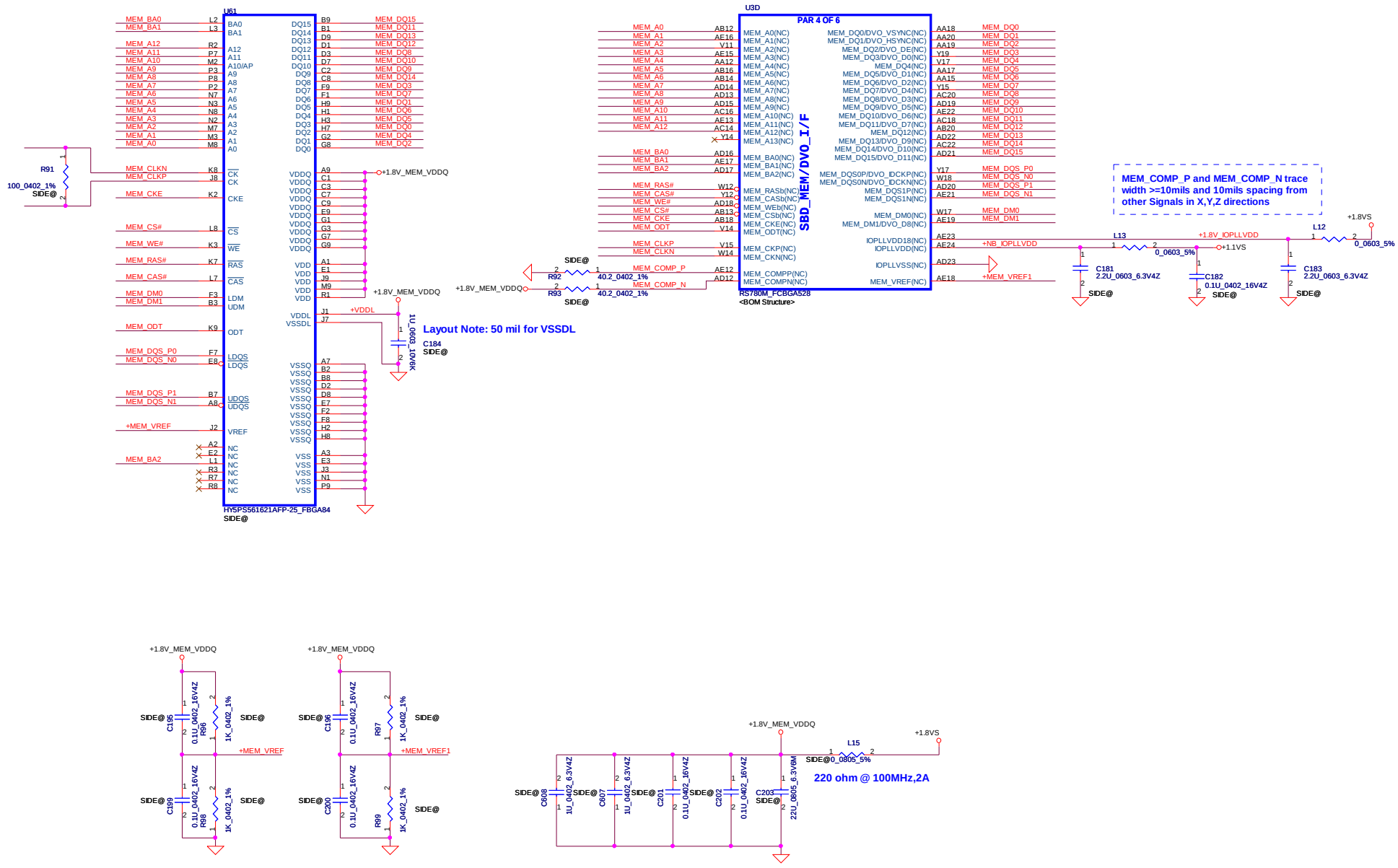

Security Classification	Compal Secret Data		
Issued Date	2007/08/02	Deciphered Date	2008/08/02

THIS SHEET OF ENGINEERING DRAWING IS THE PROPRIETARY PROPERTY OF COMPAL ELECTRONICS, INC. AND CONTAINS CONFIDENTIAL AND TRADE SECRET INFORMATION. THIS SHEET MAY NOT BE TRANSFERED FROM THE CUSTODY OF THE COMPETENT DIVISION OF R&D DEPARTMENT EXCEPT AS AUTHORIZED BY COMPAL ELECTRONICS, INC. NEITHER THIS SHEET NOR THE INFORMATION IT CONTAINS MAY BE USED BY OR DISCLOSED TO ANY THIRD PARTY WITHOUT PRIOR WRITTEN CONSENT OF COMPAL ELECTRONICS, INC.

Compal Electronics, Inc.

Title: **RS780 SIDE PORT**

Size: Custom | Document Number: LA-4091P | Rev: 0.1

Date: Thursday, November 08, 2007 | Sheet 12 of 53

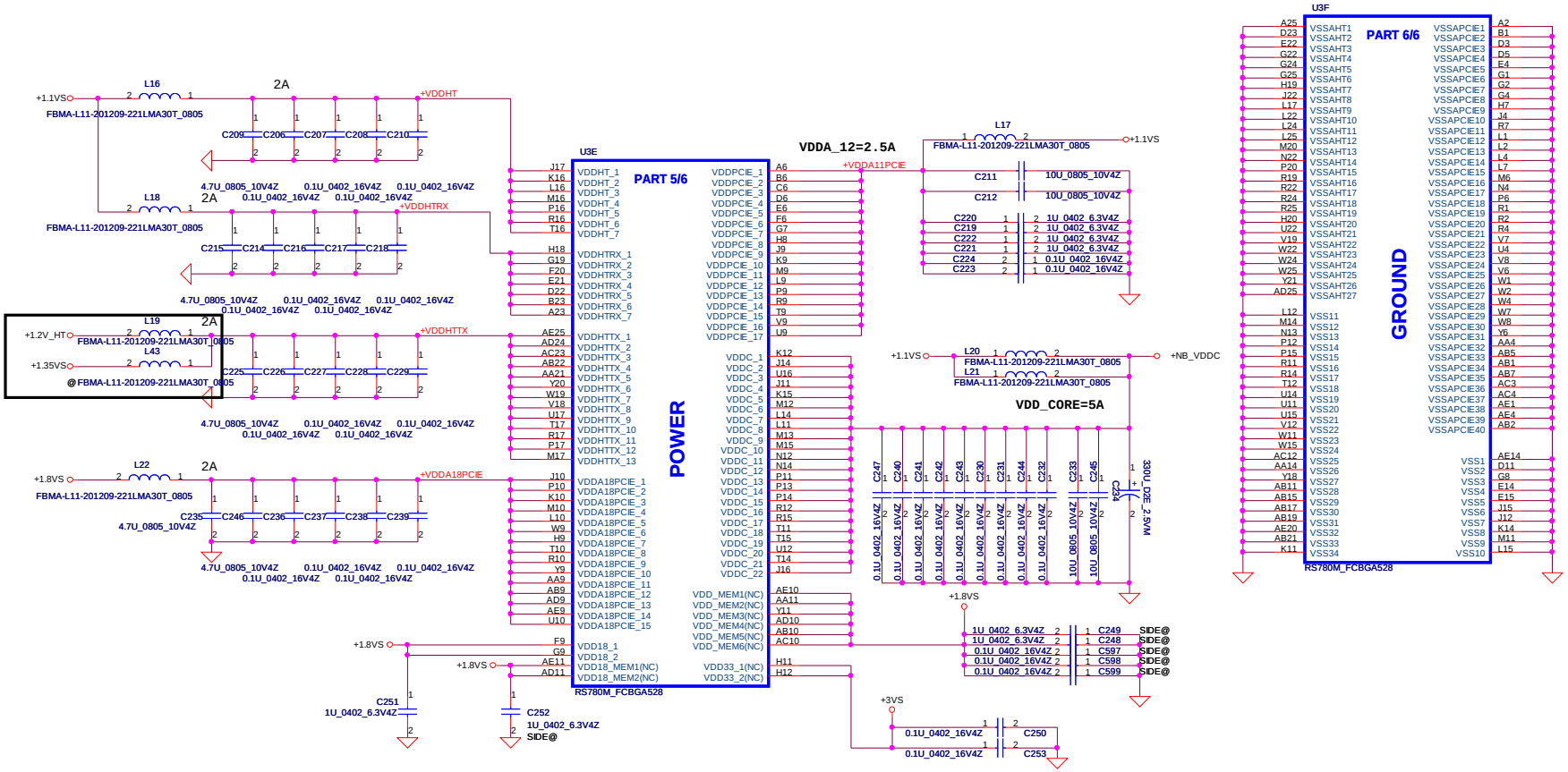

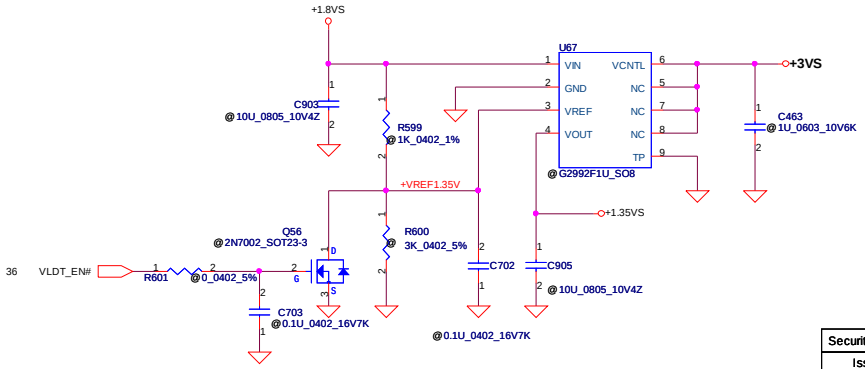

Security Classification	Compal Secret Data		
Issued Date	2007/08/02	Deciphered Date	2008/08/02

THIS SHEET OF ENGINEERING DRAWING IS THE PROPRIETARY PROPERTY OF COMPAL ELECTRONICS, INC. AND CONTAINS CONFIDENTIAL AND TRADE SECRET INFORMATION. THIS SHEET MAY NOT BE TRANSFERED FROM THE CUSTODY OF THE COMPETENT DIVISION OF R&D DEPARTMENT EXCEPT AS AUTHORIZED BY COMPAL ELECTRONICS, INC. NEITHER THIS SHEET NOR THE INFORMATION IT CONTAINS MAY BE USED BY OR DISCLOSED TO ANY THIRD PARTY WITHOUT PRIOR WRITTEN CONSENT OF COMPAL ELECTRONICS, INC.

Compal Electronics, Inc.

Title: **RS780 PWR/GND**

Size	Document Number	Rev
Custom	LA-4091P	0.1

Date: Thursday, November 08, 2007 | Sheet 13 of 53

RS780 DFT_GPIO5 mux at CRT_VSYNC pull low to 3K

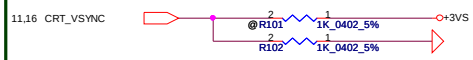

DFT_GPIO5:STRAP_DEBUG_BUS_GPIO_ENABLEb

```
Enables the Test Debug Bus using GPIO.
1 : Enable (RX780, RS780)
0 : Disable (RX780, RS780)
PIN: RS740-->RS780_AUX_CAL; RX780-->NB_TV_C; RS780--> VSYNC#
```

RS780 use register to control PCI-E configure

DFT_GPIO[4:2]: STRAP_PCIE_GPP_CFG[2:0]

```
These pin straps are used to configure PCI-E GPP mode.
000 : 00001
001 : 00010
010 : 01011
011 : 00100
100 : 01010
101 : 01100
111 : 01011
```

RS780 DFT_GPIO1

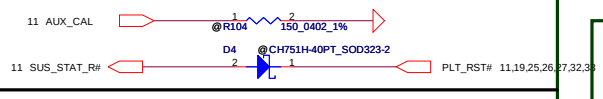

DFT_GPIO1: LOAD_EEPROM_STRAPS

```
Selects Loading of STRAPS from EPROM
1 : Bypass the loading of EEPROM straps and use Hardware Default Values
0 : I2C Master can load strap values from EEPROM if connected, or use
default values if not connected
RS740/RX780: DFT_GPIO1  RS780:SUS_STAT
```

RS780 use HSYNC to enable SIDE PORT (internal pull high)

DFT_GPIO0: STRAP_DEBUG_BUS_PCIE_ENABLEb

```
RX780: Enables the Test Debug Bus using PCIE bus
1 : Disable ( Can still be enabled using nbcfg register access )
0 : Enable

RS780: Enables Side port memory ( RS780 use HSYNC#)
1.  Disable (RS780)
0 : Enable (RS780)
```

Security Classification	Compal Secret Data		
Issued Date	2007/08/02	Deciphered Date	2008/08/02

THIS SHEET OF ENGINEERING DRAWING IS THE PROPRIETARY PROPERTY OF COMPAL ELECTRONICS, INC. AND CONTAINS CONFIDENTIAL AND TRADE SECRET INFORMATION. THIS SHEET MAY NOT BE TRANSFERED FROM THE CUSTODY OF THE COMPETENT DIVISION OF R&D DEPARTMENT EXCEPT AS AUTHORIZED BY COMPAL ELECTRONICS, INC. NEITHER THIS SHEET NOR THE INFORMATION IT CONTAINS MAY BE USED BY OR DISCLOSED TO ANY THIRD PARTY WITHOUT PRIOR WRITTEN CONSENT OF COMPAL ELECTRONICS, INC.

Compal Electronics, Inc.

Title: **RS780 STRAPS**

Size	Document Number	Rev
Custom	LA-4091P	0.1

Date: Thursday, November 08, 2007 | Sheet 14 of 53

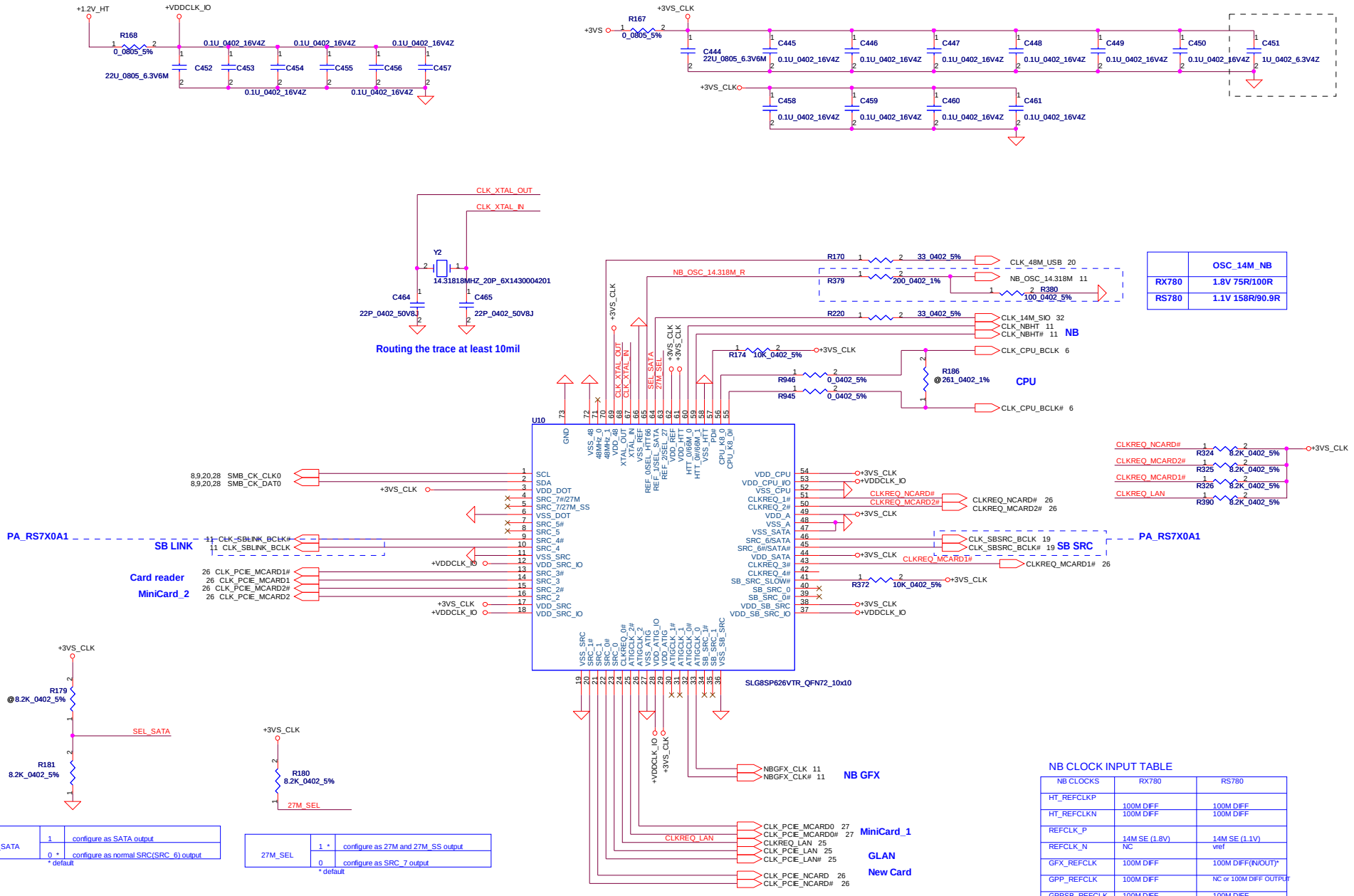

	OSC_14M_NB
RX780	1.8V 75R/100R
RS780	1.1V 158R/90.9R

SEL_SATA		
	1	configure as SATA output
	0 *	configure as normal SRC(SRC_6) output

* default

27M_SEL		
	1 *	configure as 27M and 27M_SS output
	0	configure as SRC_7 output

* default

Use voltage divider resistor R379 & R380 to pull low

NB_OSC_14.318M		
	1	configure as single-ended 66MHz output
	0*	configure as differential 100MHz output

* default

NB CLOCK INPUT TABLE

NB CLOCKS	RX780	RS780
HT_REFCLKP	100M DIFF	100M DIFF
HT_REFCLKN	100M DIFF	100M DIFF
REFCLK_P	14M SE (1.8V)	14M SE (1.1V)
REFCLK_N	NC	vref
GFX_REFCLK	100M DIFF	100M DIFF(IN/OUT)*
GPP_REFCLK	100M DIFF	NC or 100M DIFF OUTPUT
GPPSB_REFCLK	100M DIFF	100M DIFF

Security Classification	Compal Secret Data		
Issued Date	2007/08/02	Deciphered Date	2008/08/02

THIS SHEET OF ENGINEERING DRAWING IS THE PROPRIETARY PROPERTY OF COMPAL ELECTRONICS, INC. AND CONTAINS CONFIDENTIAL AND TRADE SECRET INFORMATION. THIS SHEET MAY NOT BE TRANSFERED FROM THE CUSTODY OF THE COMPETENT DIVISION OF R&D DEPARTMENT EXCEPT AS AUTHORIZED BY COMPAL ELECTRONICS, INC. NEITHER THIS SHEET NOR THE INFORMATION IT CONTAINS MAY BE USED BY OR DISCLOSED TO ANY THIRD PARTY WITHOUT PRIOR WRITTEN CONSENT OF COMPAL ELECTRONICS, INC.

Compal Electronics, Inc.

Title: **Clock generator**

Size	Document Number	Rev
Custom	LA-4091P	0.1

Date: Thursday, November 08, 2007 | Sheet 15 of 53

CRT CONNECTOR

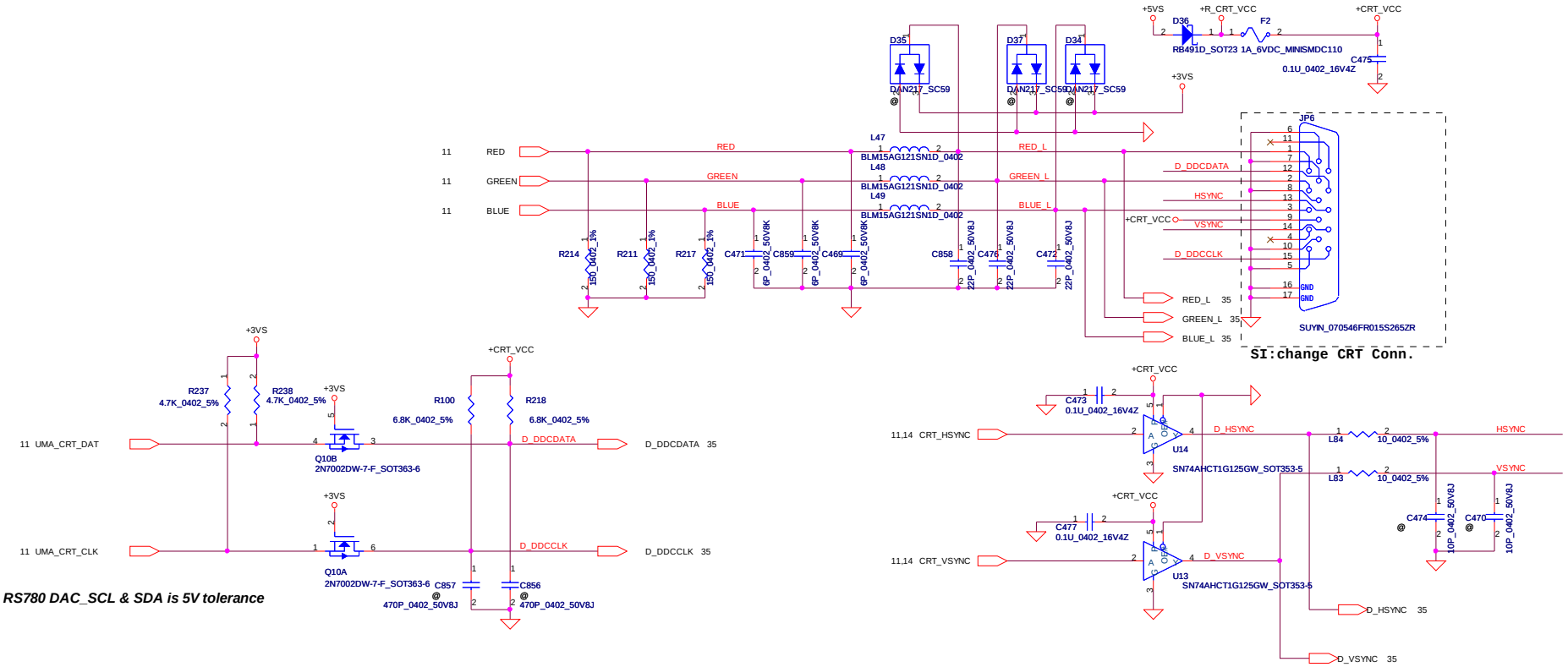

RS780 DAC_SCL & SDA is 5V tolerance

Security Classification	Compal Secret Data		
Issued Date	2007/08/02	Deciphered Date	2008/08/02

THIS SHEET OF ENGINEERING DRAWING IS THE PROPRIETARY PROPERTY OF COMPAL ELECTRONICS, INC. AND CONTAINS CONFIDENTIAL AND TRADE SECRET INFORMATION. THIS SHEET MAY NOT BE TRANSFERED FROM THE CUSTODY OF THE COMPETENT DIVISION OF R&D DEPARTMENT EXCEPT AS AUTHORIZED BY COMPAL ELECTRONICS, INC. NEITHER THIS SHEET NOR THE INFORMATION IT CONTAINS MAY BE USED BY OR DISCLOSED TO ANY THIRD PARTY WITHOUT PRIOR WRITTEN CONSENT OF COMPAL ELECTRONICS, INC.

Compal Electronics, Inc.

Title: **CRT Connector**

Size	Document Number	Rev
Custom	LA-4091P	0.1

Date: Thursday, November 08, 2007 | Sheet 16 of 53

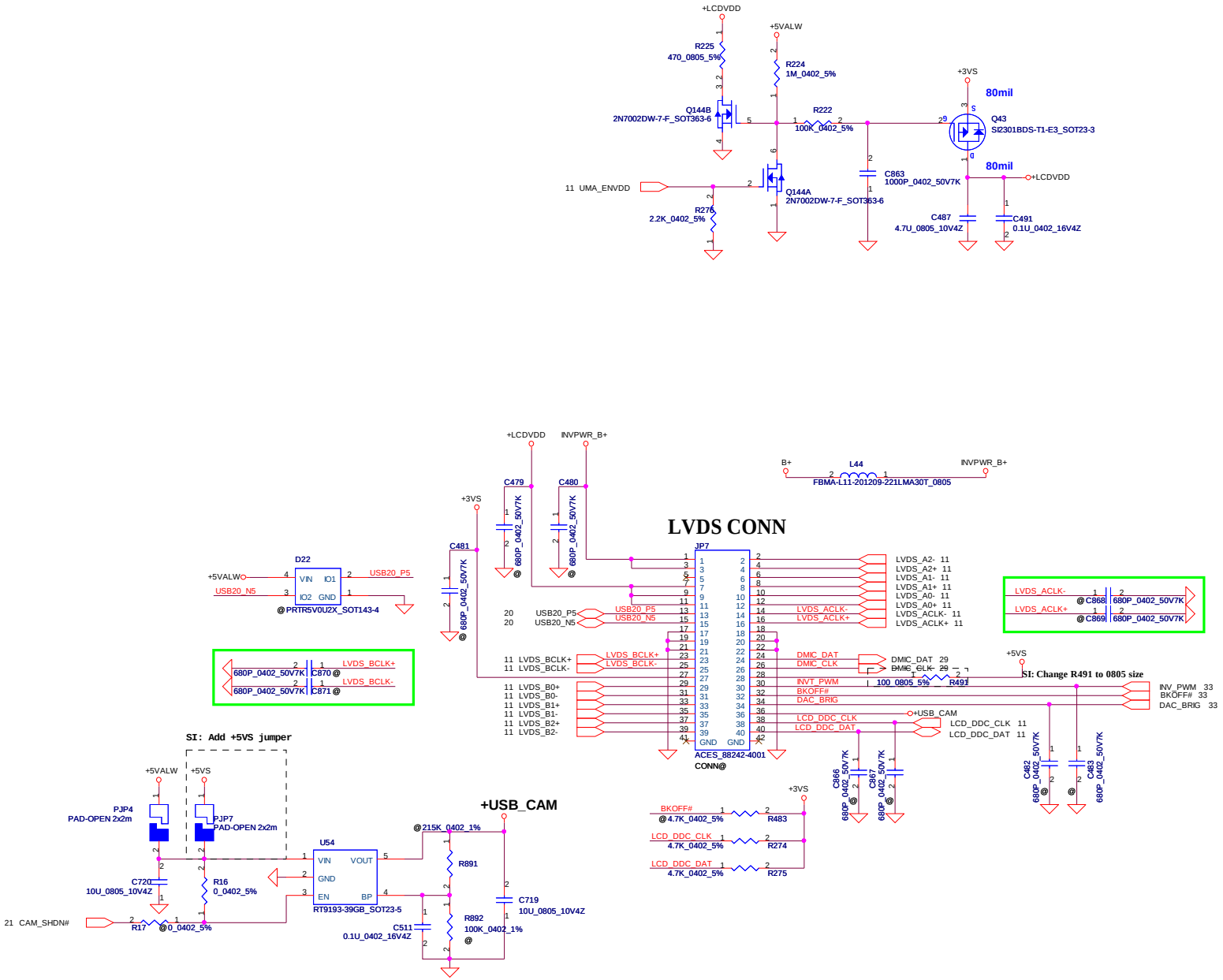

Security Classification	Compal Secret Data		
Issued Date	2007/08/02	Deciphered Date	2008/08/02

THIS SHEET OF ENGINEERING DRAWING IS THE PROPRIETARY PROPERTY OF COMPAL ELECTRONICS, INC. AND CONTAINS CONFIDENTIAL AND TRADE SECRET INFORMATION. THIS SHEET MAY NOT BE TRANSFERED FROM THE CUSTODY OF THE COMPETENT DIVISION OF R&D DEPARTMENT EXCEPT AS AUTHORIZED BY COMPAL ELECTRONICS, INC. NEITHER THIS SHEET NOR THE INFORMATION IT CONTAINS MAY BE USED BY OR DISCLOSED TO ANY THIRD PARTY WITHOUT PRIOR WRITTEN CONSENT OF COMPAL ELECTRONICS, INC.

Compal Electronics, Inc.

Title: **LCD CONN.**

Size	Document Number	Rev
Custom	LA-4091P	0.1

Date: Thursday, November 08, 2007 | Sheet 17 of 53

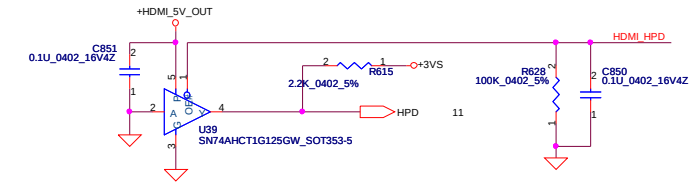

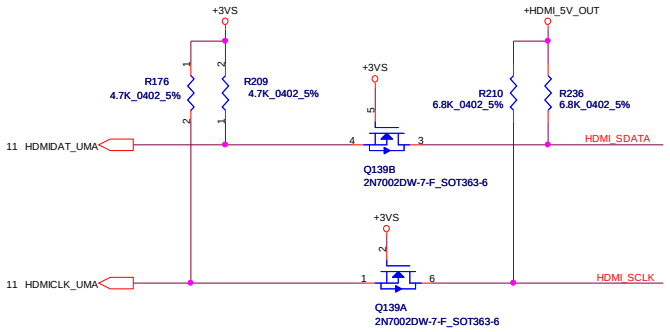

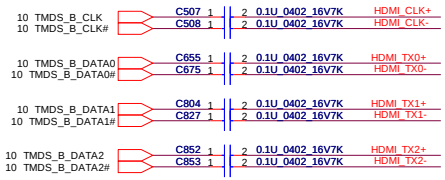

SI:Add R6161~R624 for EMI requset

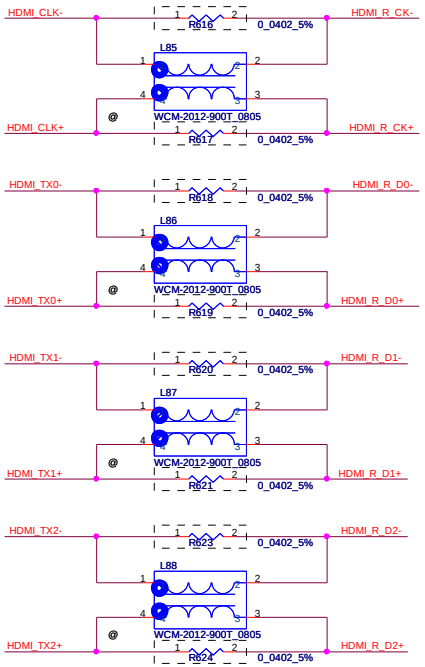

SI:Add Q136 & Q137 for AMD request

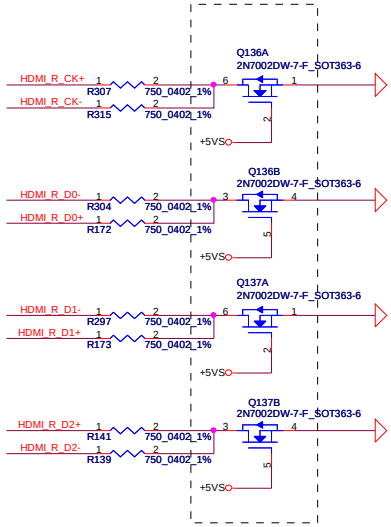

MP:Update D10 to meet HDMI.

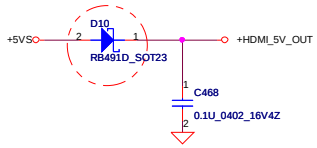

HDMI Connector

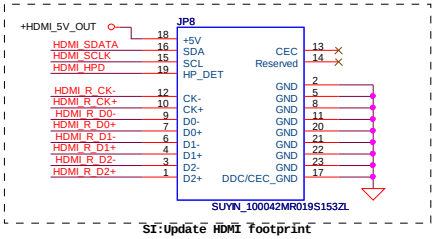

SI:Update HDMI footprint

Security Classification	Compal Secret Data		
Issued Date	2007/08/02	Deciphered Date	2008/08/02

THIS SHEET OF ENGINEERING DRAWING IS THE PROPRIETARY PROPERTY OF COMPAL ELECTRONICS, INC. AND CONTAINS CONFIDENTIAL AND TRADE SECRET INFORMATION. THIS SHEET MAY NOT BE TRANSFERED FROM THE CUSTODY OF THE COMPETENT DIVISION OF R&D DEPARTMENT EXCEPT AS AUTHORIZED BY COMPAL ELECTRONICS, INC. NEITHER THIS SHEET NOR THE INFORMATION IT CONTAINS MAY BE USED BY OR DISCLOSED TO ANY THIRD PARTY WITHOUT PRIOR WRITTEN CONSENT OF COMPAL ELECTRONICS, INC.

Compal Electronics, Inc.

Title: **HDMI**

Size	Document Number	Rev
Custom	LA-4091P	0.1

Date: Thursday, November 08, 2007 | Sheet 18 of 53

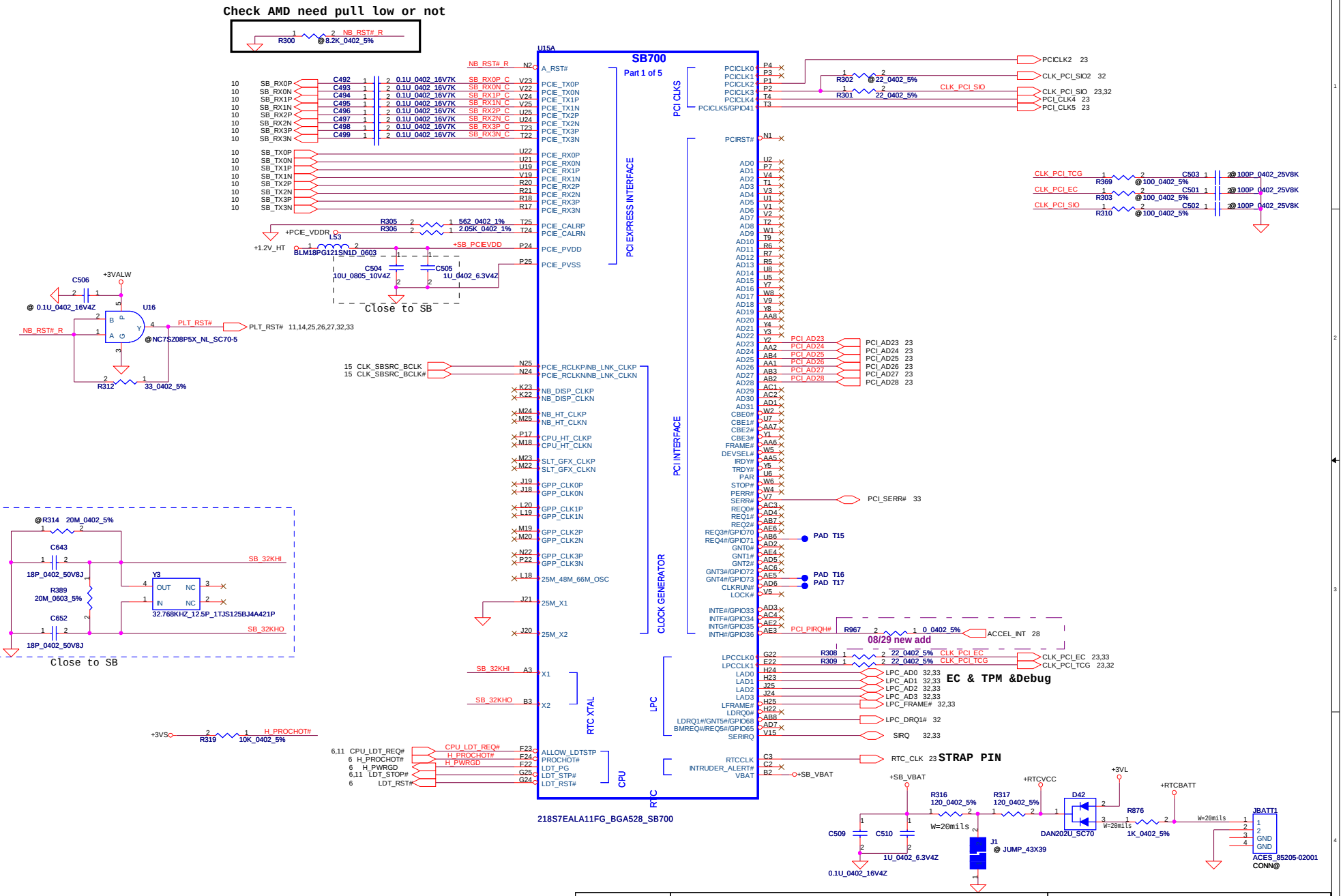

Security Classification	Compal Secret Data		
Issued Date	2007/08/02	Deciphered Date	2008/08/02

THIS SHEET OF ENGINEERING DRAWING IS THE PROPRIETARY PROPERTY OF COMPAL ELECTRONICS, INC. AND CONTAINS CONFIDENTIAL AND TRADE SECRET INFORMATION. THIS SHEET MAY NOT BE TRANSFERED FROM THE CUSTODY OF THE COMPETENT DIVISION OF R&D DEPARTMENT EXCEPT AS AUTHORIZED BY COMPAL ELECTRONICS, INC. NEITHER THIS SHEET NOR THE INFORMATION IT CONTAINS MAY BE USED BY OR DISCLOSED TO ANY THIRD PARTY WITHOUT PRIOR WRITTEN CONSENT OF COMPAL ELECTRONICS, INC.

Compal Electronics, Inc.

Title: **SB700-PCIE/PCI/ACPI/LPC/RTC**

Size	Document Number	Rev
Custom	LA-4091P	0.1

Date: Thursday, November 08, 2007 | Sheet 19 of 53

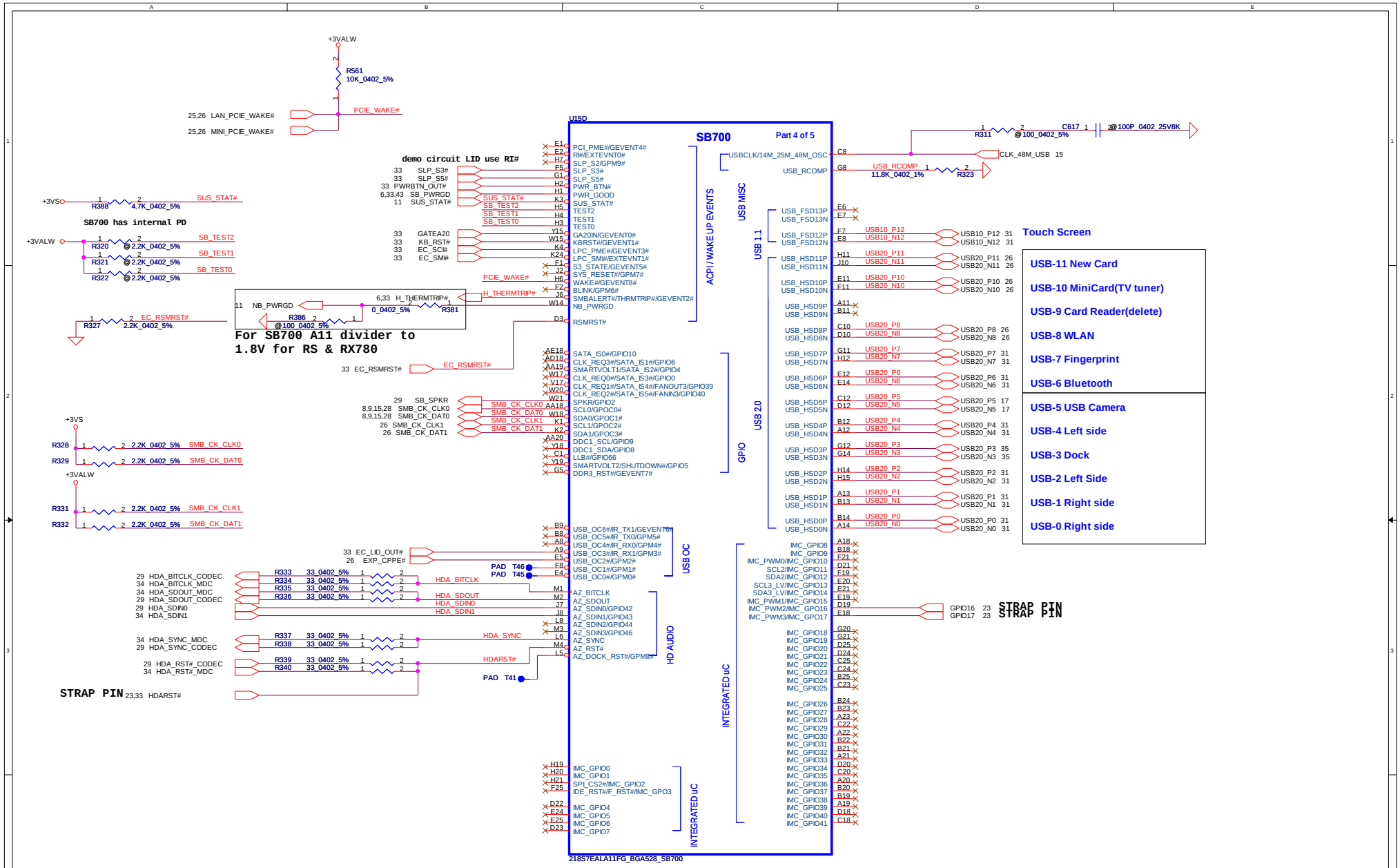

Security Classification	Compal Secret Data		
Issued Date	2007/08/02	Deciphered Date	2008/08/02

THIS SHEET OF ENGINEERING DRAWING IS THE PROPRIETARY PROPERTY OF COMPAL ELECTRONICS, INC. AND CONTAINS CONFIDENTIAL AND TRADE SECRET INFORMATION. THIS SHEET MAY NOT BE TRANSFERED FROM THE CUSTODY OF THE COMPETENT DIVISION OF R&D DEPARTMENT EXCEPT AS AUTHORIZED BY COMPAL ELECTRONICS, INC. NEITHER THIS SHEET NOR THE INFORMATION IT CONTAINS MAY BE USED BY OR DISCLOSED TO ANY THIRD PARTY WITHOUT PRIOR WRITTEN CONSENT OF COMPAL ELECTRONICS, INC.

Compal Electronics, Inc.

Title: **SB700 USB/AC97**

Size: Custom | Document Number: LA-4091P | Rev: 0.1

Date: Thursday, November 08, 2007 | Sheet 20 of 53

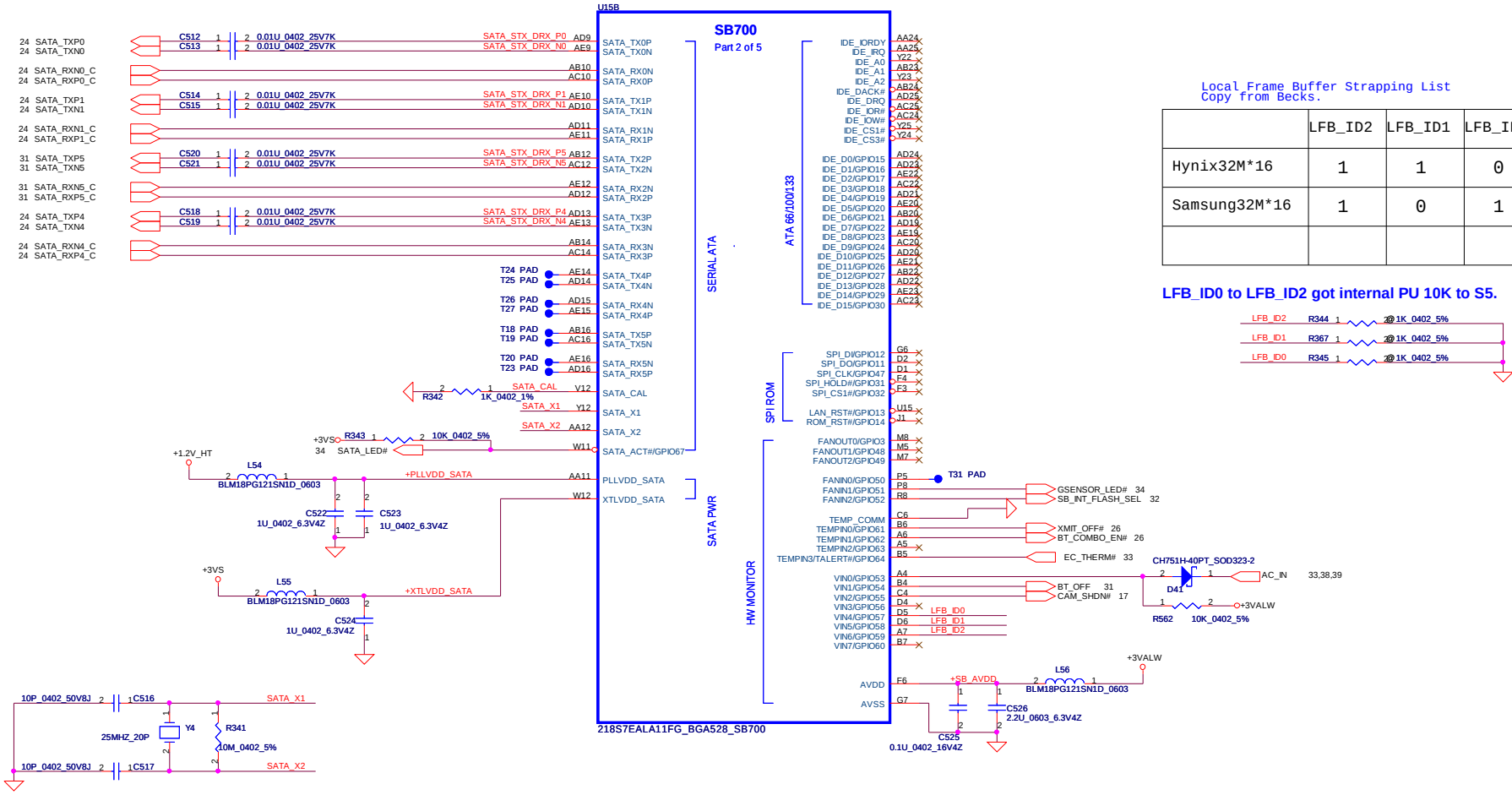

Local Frame Buffer Strapping List
Copy from Becks.

	LFB_ID2	LFB_ID1	LFB_ID0
Hynix32M*16	1	1	0
Samsung32M*16	1	0	1

LFB_ID0 to LFB_ID2 got internal PU 10K to S5.

Security Classification	Compal Secret Data		
Issued Date	2007/08/02	Deciphered Date	2008/08/02

THIS SHEET OF ENGINEERING DRAWING IS THE PROPRIETARY PROPERTY OF COMPAL ELECTRONICS, INC. AND CONTAINS CONFIDENTIAL AND TRADE SECRET INFORMATION. THIS SHEET MAY NOT BE TRANSFERED FROM THE CUSTODY OF THE COMPETENT DIVISION OF R&D DEPARTMENT EXCEPT AS AUTHORIZED BY COMPAL ELECTRONICS, INC. NEITHER THIS SHEET NOR THE INFORMATION IT CONTAINS MAY BE USED BY OR DISCLOSED TO ANY THIRD PARTY WITHOUT PRIOR WRITTEN CONSENT OF COMPAL ELECTRONICS, INC.

Compal Electronics, Inc.

Title: **SB700 SATA/IDE/SPI**

Size: Custom | Document Number: LA-4091P | Rev: 0.1

Date: Thursday, November 08, 2007 | Sheet 21 of 53

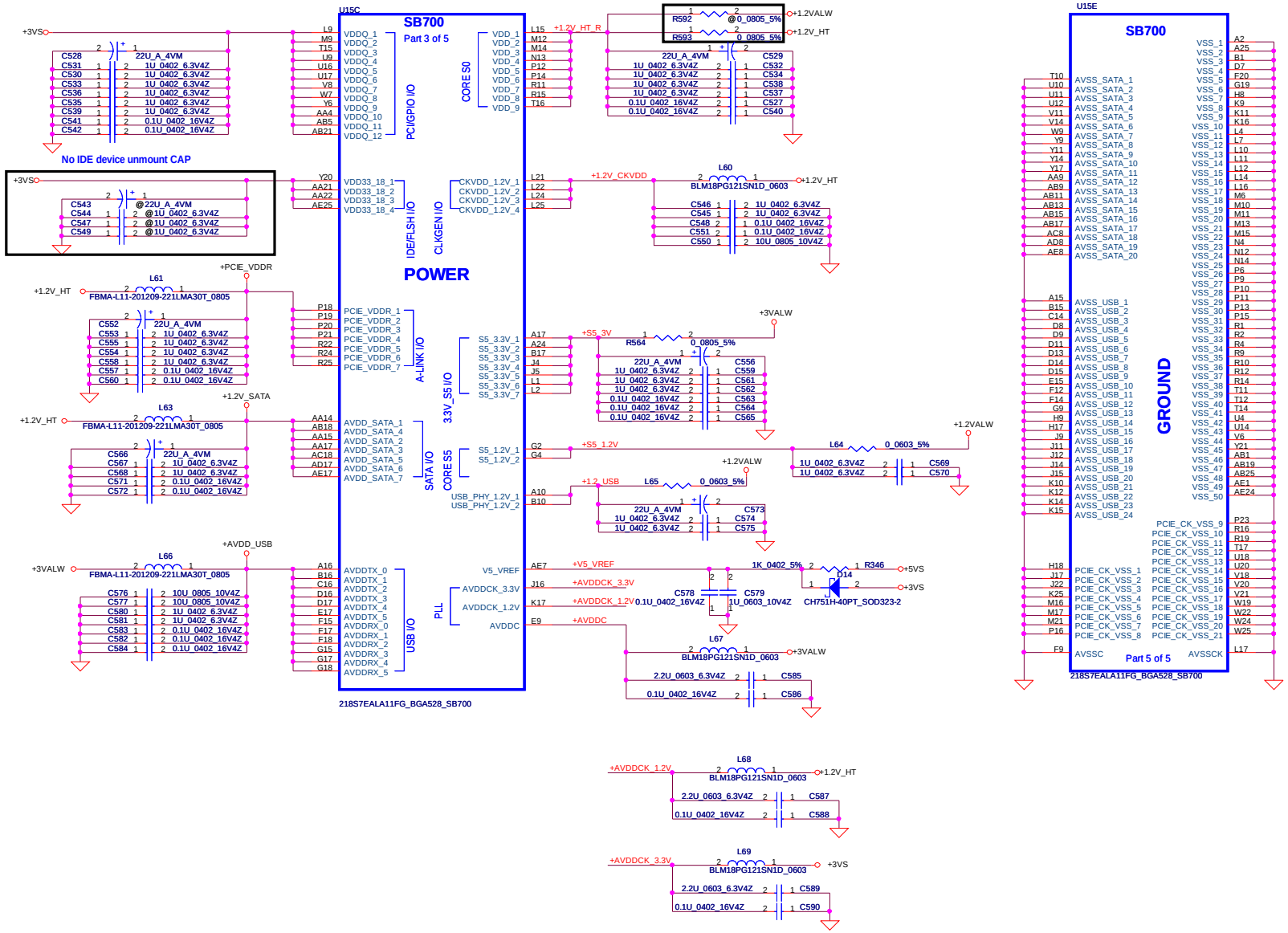

Security Classification	Compal Secret Data		
Issued Date	2007/08/02	Deciphered Date	2008/08/02

THIS SHEET OF ENGINEERING DRAWING IS THE PROPRIETARY PROPERTY OF COMPAL ELECTRONICS, INC. AND CONTAINS CONFIDENTIAL AND TRADE SECRET INFORMATION. THIS SHEET MAY NOT BE TRANSFERED FROM THE CUSTODY OF THE COMPETENT DIVISION OF R&D DEPARTMENT EXCEPT AS AUTHORIZED BY COMPAL ELECTRONICS, INC. NEITHER THIS SHEET NOR THE INFORMATION IT CONTAINS MAY BE USED BY OR DISCLOSED TO ANY THIRD PARTY WITHOUT PRIOR WRITTEN CONSENT OF COMPAL ELECTRONICS, INC.

Compal Electronics, Inc.

Title: **Cover Sheet**

Size	Document Number	Rev
Custom	LA-4091P	0.1

Date: Thursday, November 08, 2007 | Sheet 22 of 53

REQUIRED STRAPS

NOTE: SB700 HAS INTERNAL 15K PULL UP RESISTOR FOR RTC_CLK

	PCI_CLK2	PCI_CLK3	PCI_CLK4	PCI_CLK5	LPC_CLK0	LPC_CLK1	RTC_CLK	AZ_RST_CD#	GP17 GP16
PULL HIGH	BOOTFAIL TIMER ENABLED	USE DEBUG STRAPS	RESERVED	RESERVED	ENABLE PCI MEM BOOT	CLKGEN ENABLED	INTERNAL RTC DEFAULT	EC ENABLED	Internal pull up H,H = Reserved H,L = SPI ROM L,H = LPC ROM (Default) L,L = FWH ROM
PULL LOW	BOOTFAIL TIMER DISABLED DEFAULT	IGNORE DEBUG STRAPS DEFAULT			DISABLE PCI MEM BOOT DEFAULT	CLKGEN DISABLED DEFAULT	EXT. RTC (PD on X1, apply 32KHz to RTC_CLK)	EC DISABLED DEFAULT	

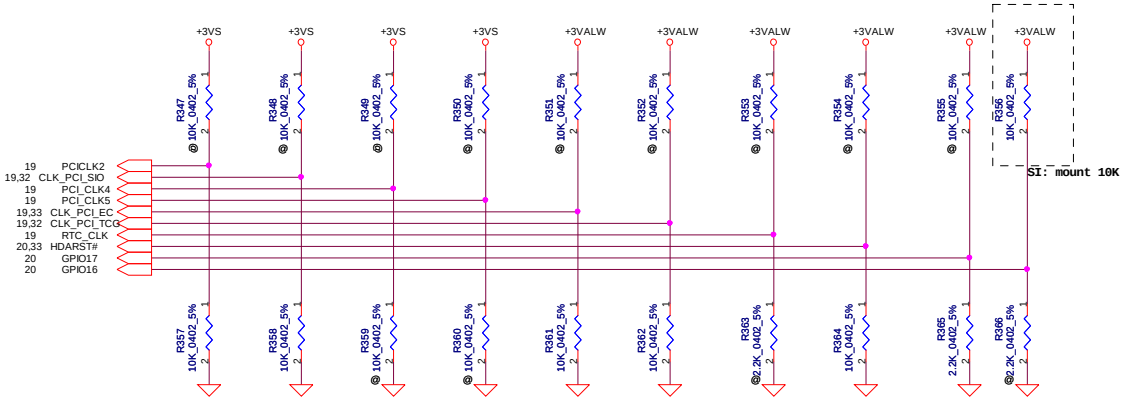

DEBUG STRAPS

SB700 HAS 15K INTERNAL PU FOR PCI_AD[28:23]

	PCI_AD28	PCI_AD27	PCI_AD26	PCI_AD25	PCI_AD24	PCI_AD23
PULL HIGH	USE LONG RESET DEFAULT	USE PCI PLL DEFAULT	USE ACPI BCLK DEFAULT	USE IDE PLL DEFAULT	USE DEFAULT PCIE STRAPS DEFAULT	RESERVED
PULL LOW	USE SHORT RESET	BYPASS PCI PLL	BYPASS ACPI BCLK	BYPASS IDE PLL	USE EEPROM PCIE STRAPS	

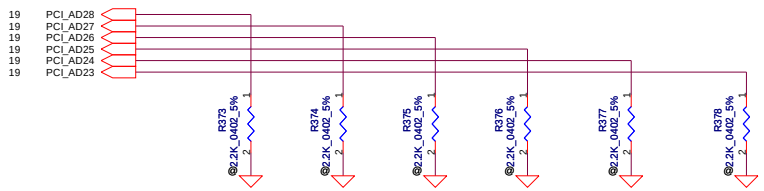

Security Classification	Compal Secret Data		
Issued Date	2007/08/02	Deciphered Date	2008/08/02

THIS SHEET OF ENGINEERING DRAWING IS THE PROPRIETARY PROPERTY OF COMPAL ELECTRONICS, INC. AND CONTAINS CONFIDENTIAL AND TRADE SECRET INFORMATION. THIS SHEET MAY NOT BE TRANSFERED FROM THE CUSTODY OF THE COMPETENT DIVISION OF R&D DEPARTMENT EXCEPT AS AUTHORIZED BY COMPAL ELECTRONICS, INC. NEITHER THIS SHEET NOR THE INFORMATION IT CONTAINS MAY BE USED BY OR DISCLOSED TO ANY THIRD PARTY WITHOUT PRIOR WRITTEN CONSENT OF COMPAL ELECTRONICS, INC.

Compal Electronics, Inc.

Title: SB700 STRAPS

Size: Custom | Document Number: LA-4091P | Rev: 0.1

Date: Thursday, November 08, 2007 | Sheet 23 of 53

HDD Connector

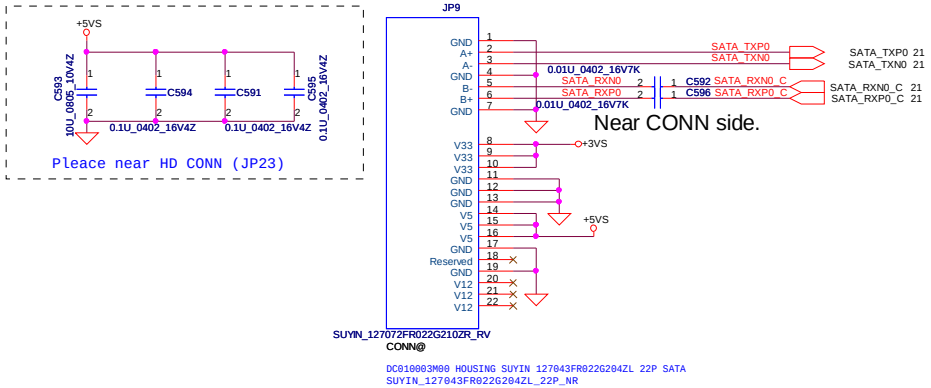

2nd HDD Connector-option

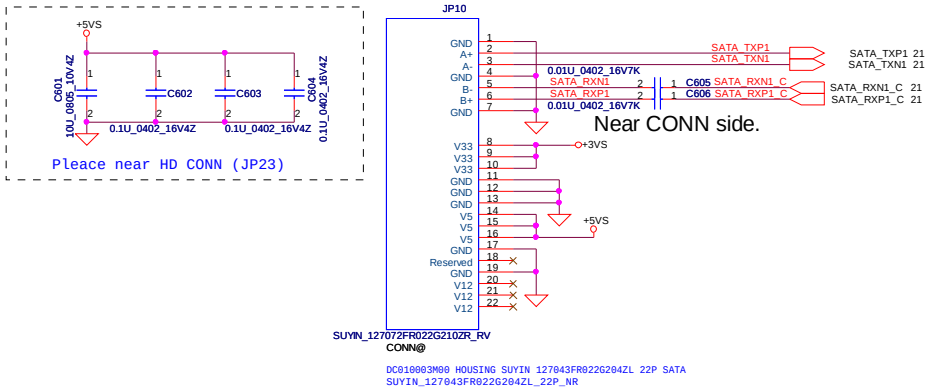

CD-ROM Connector

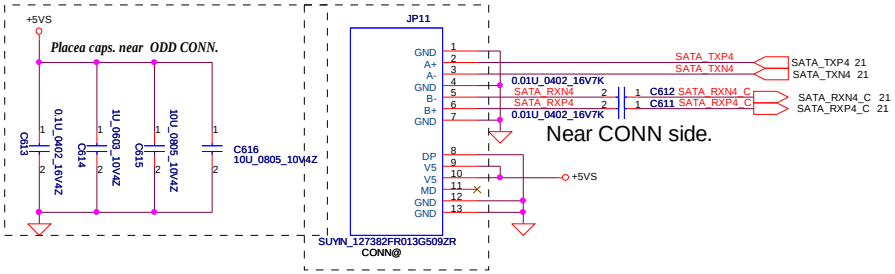

SI: Update ODD footprint to fix pin reverse issue

Security Classification	Compal Secret Data		
Issued Date	2007/08/02	Deciphered Date	2008/08/02

THIS SHEET OF ENGINEERING DRAWING IS THE PROPRIETARY PROPERTY OF COMPAL ELECTRONICS, INC. AND CONTAINS CONFIDENTIAL AND TRADE SECRET INFORMATION. THIS SHEET MAY NOT BE TRANSFERED FROM THE CUSTODY OF THE COMPETENT DIVISION OF R&D DEPARTMENT EXCEPT AS AUTHORIZED BY COMPAL ELECTRONICS, INC. NEITHER THIS SHEET NOR THE INFORMATION IT CONTAINS MAY BE USED BY OR DISCLOSED TO ANY THIRD PARTY WITHOUT PRIOR WRITTEN CONSENT OF COMPAL ELECTRONICS, INC.

Compal Electronics, Inc.

Title: **HDD/CDROM**

Size: Custom | Document Number: LA-4091P | Rev: 0.1

Date: Thursday, November 08, 2007 | Sheet 24 of 53

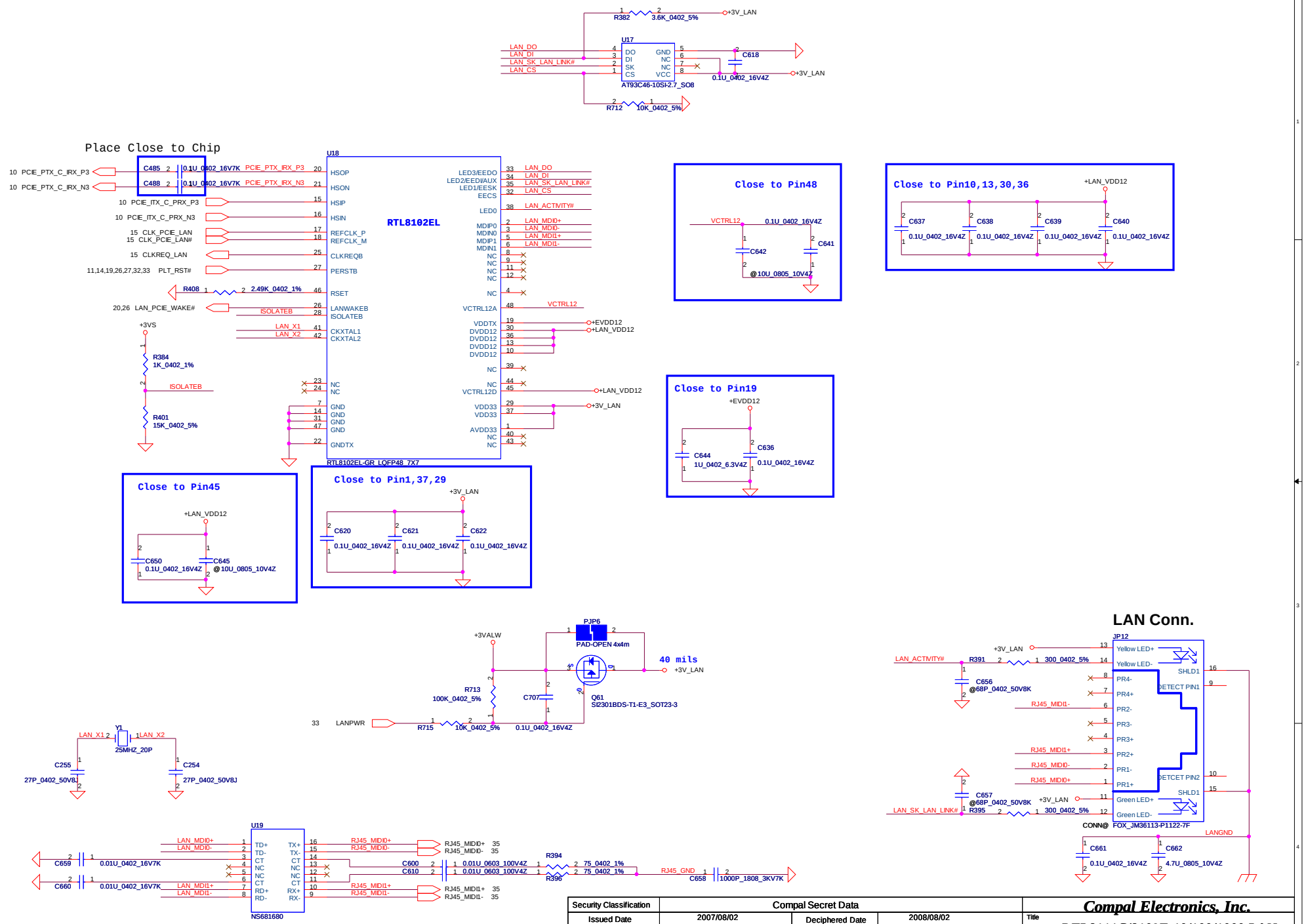

Security Classification	Compal Secret Data		
Issued Date	2007/08/02	Deciphered Date	2008/08/02

THIS SHEET OF ENGINEERING DRAWING IS THE PROPRIETARY PROPERTY OF COMPAL ELECTRONICS, INC. AND CONTAINS CONFIDENTIAL AND TRADE SECRET INFORMATION. THIS SHEET MAY NOT BE TRANSFERED FROM THE CUSTODY OF THE COMPETENT DIVISION OF R&D DEPARTMENT EXCEPT AS AUTHORIZED BY COMPAL ELECTRONICS, INC. NEITHER THIS SHEET NOR THE INFORMATION IT CONTAINS MAY BE USED BY OR DISCLOSED TO ANY THIRD PARTY WITHOUT PRIOR WRITTEN CONSENT OF COMPAL ELECTRONICS, INC.

Compal Electronics, Inc.

Title: **RTL8111C/8102E 10/100/1000 LAN**

Size	Document Number	Rev
Custom	LA-4091P	0.1

Date: Thursday, November 08, 2007 | Sheet 25 of 53

Mini Card---TV tuner

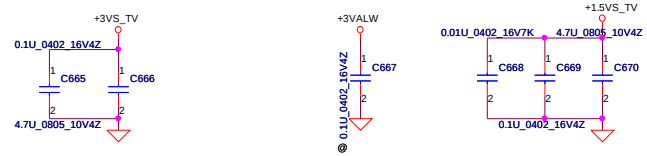

SI: Exchange TV & WLAN
minicard location

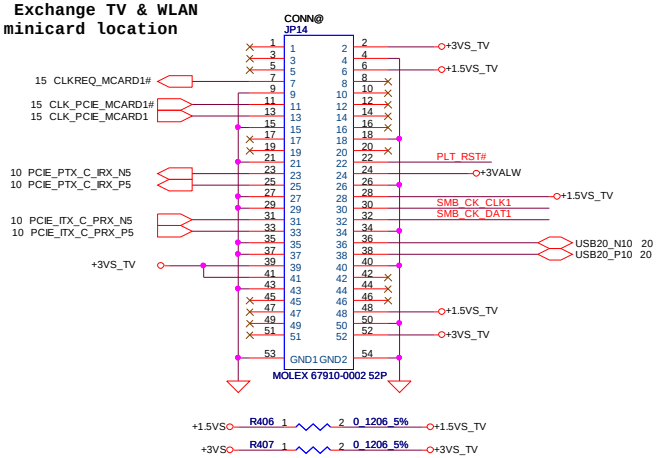

New Card

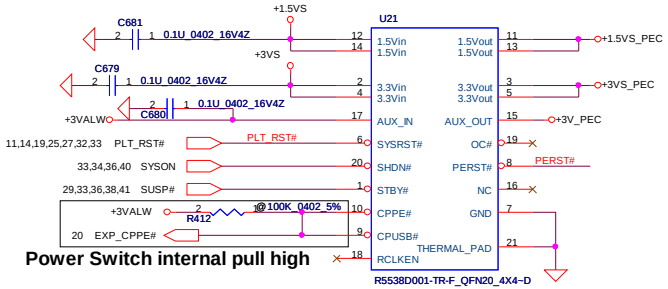

Power Switch internal pull high

USE TI TPS2231MRGPR

Mini-Express Card---WLAN

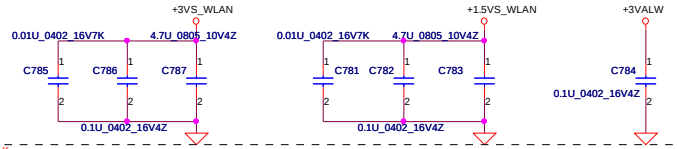

Near to Express Card slot.

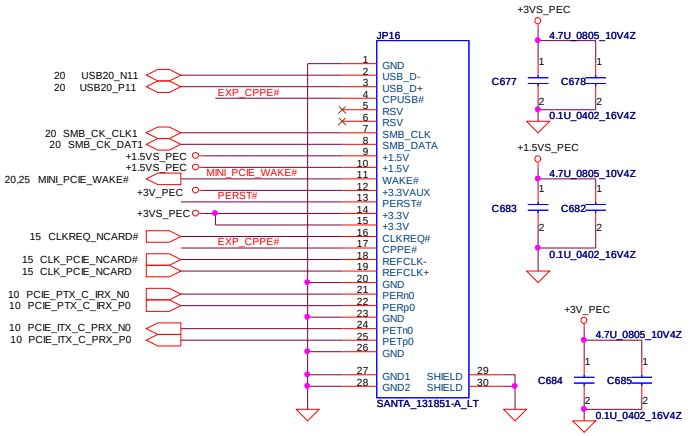

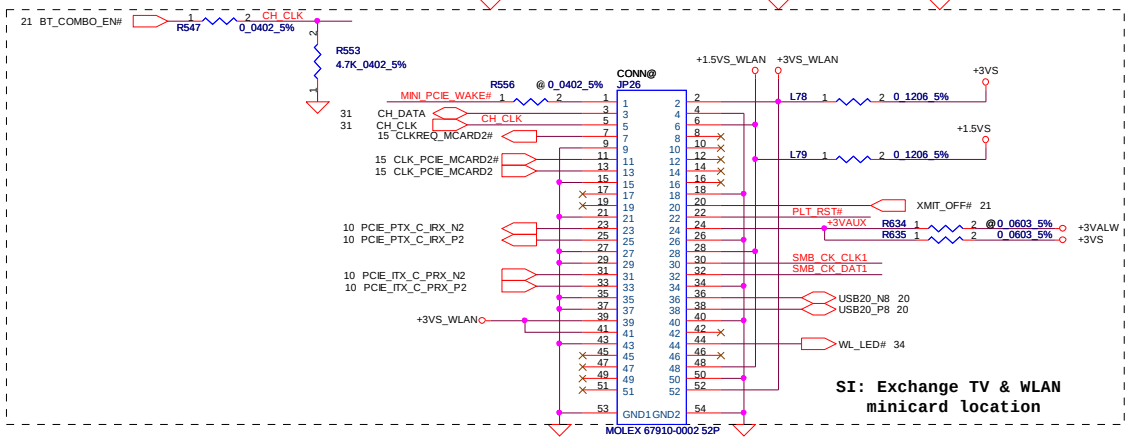

SI: Exchange TV & WLAN
minicard location

Security Classification	Compal Secret Data		
Issued Date	2007/08/02	Deciphered Date	2008/08/02

THIS SHEET OF ENGINEERING DRAWING IS THE PROPRIETARY PROPERTY OF COMPAL ELECTRONICS, INC. AND CONTAINS CONFIDENTIAL AND TRADE SECRET INFORMATION. THIS SHEET MAY NOT BE TRANSFERED FROM THE CUSTODY OF THE COMPETENT DIVISION OF R&D DEPARTMENT EXCEPT AS AUTHORIZED BY COMPAL ELECTRONICS, INC. NEITHER THIS SHEET NOR THE INFORMATION IT CONTAINS MAY BE USED BY OR DISCLOSED TO ANY THIRD PARTY WITHOUT PRIOR WRITTEN CONSENT OF COMPAL ELECTRONICS, INC.

Compal Electronics, Inc.

Title: **Mini-Card/Mini-PCI/Express Card**

Size	Document Number	Rev
Custom	LA-4091P	0.1

Date: Thursday, November 08, 2007 | Sheet 26 of 53

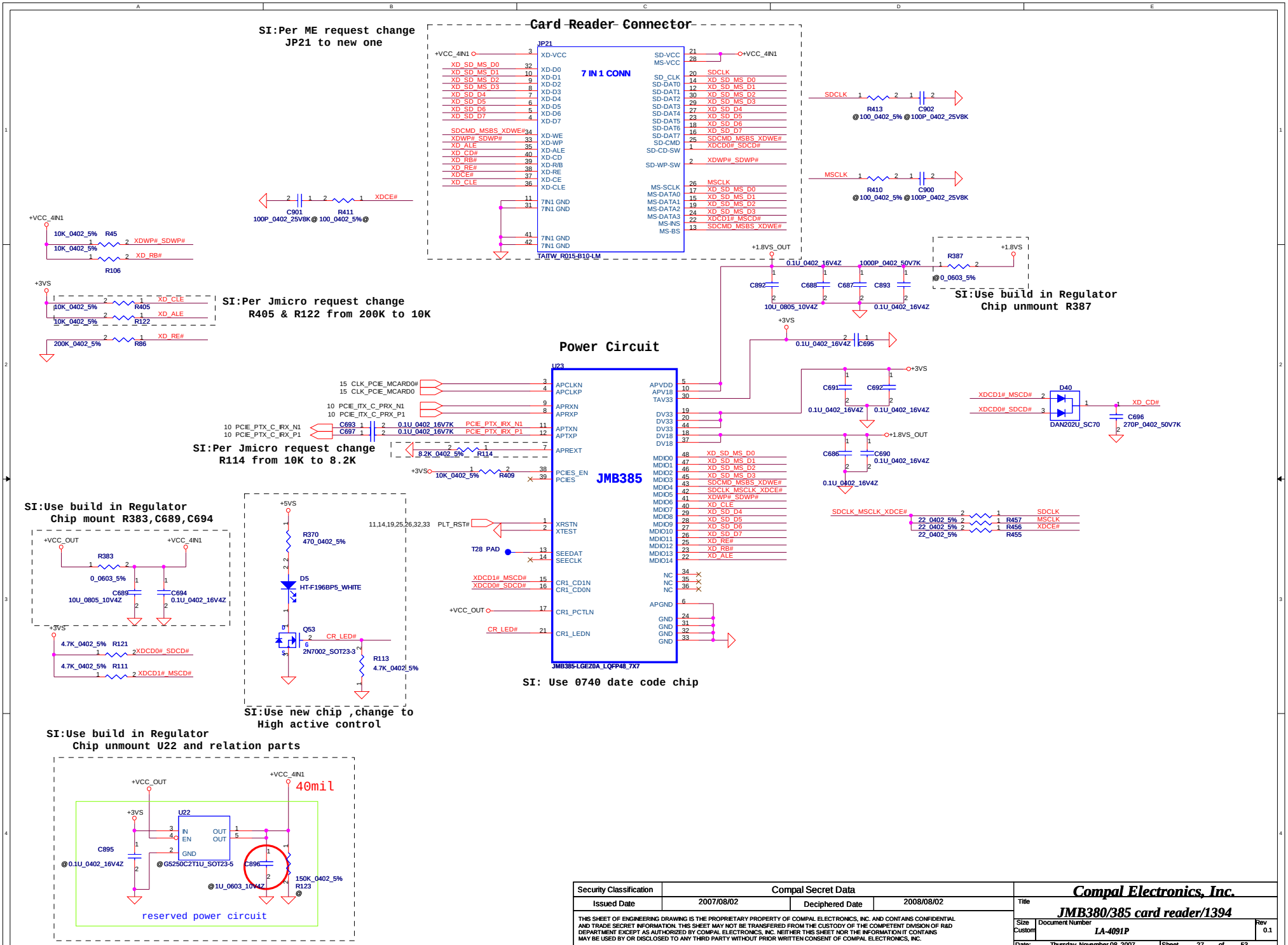
Card Reader Connector
SI:Per ME request change
JP21 to new one
JP21
7 IN 1 CONN
TAITW_R015-B10-LM
SI:Per Jmicro request change
R405 & R122 from 200K to 10K
SI:Use build in Regulator
Chip unmount R387
Power Circuit
JMB385
JMB385-LGEZ0A_LQFP48_7X7
SI:Per Jmicro request change
R114 from 10K to 8.2K
SI: Use 0740 date code chip
SI:Use build in Regulator
Chip mount R383,C689,C694
SI:Use new chip ,change to
High active control
SI:Use build in Regulator
Chip unmount U22 and relation parts
40mil
reserved power circuit
Compal Secret Data
Issued Date 2007/08/02
Deciphered Date 2008/08/02
Compal Electronics, Inc.
JMB380/385 card reader/1394
LA-4091P
Rev 0.1
Thursday, November 08, 2007
Sheet 27 of 53

ACCELEROMETER

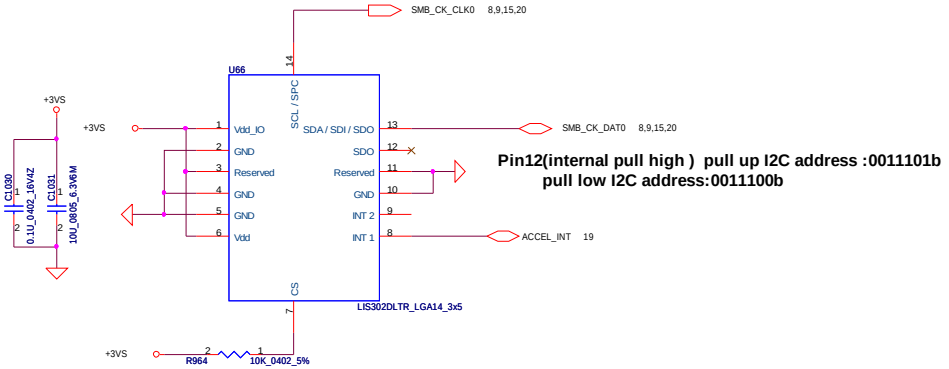

Pin12(internal pull high) pull up I2C address :0011101b
pull low I2C address:0011100b

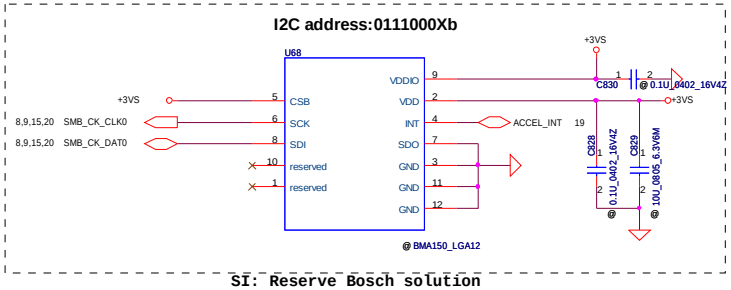

SI: Reserve Bosch solution

Security Classification	Compal Secret Data		
Issued Date	2006/08/04	Deciphered Date	2006/10/06

THIS SHEET OF ENGINEERING DRAWING IS THE PROPRIETARY PROPERTY OF COMPAL ELECTRONICS, INC. AND CONTAINS CONFIDENTIAL AND TRADE SECRET INFORMATION. THIS SHEET MAY NOT BE TRANSFERED FROM THE CUSTODY OF THE COMPETENT DIVISION OF R&D DEPARTMENT EXCEPT AS AUTHORIZED BY COMPAL ELECTRONICS, INC. NEITHER THIS SHEET NOR THE INFORMATION IT CONTAINS MAY BE USED BY OR DISCLOSED TO ANY THIRD PARTY WITHOUT PRIOR WRITTEN CONSENT OF COMPAL ELECTRONICS, INC.

Compal Electronics, Inc.

Title: **R5C833_1394**

Size: Custom | Document Number: *Montevina Consumer Discrete* | Rev: 0.1

Date: Thursday, November 08, 2007 | Sheet 28 of 53

CODEC POWER

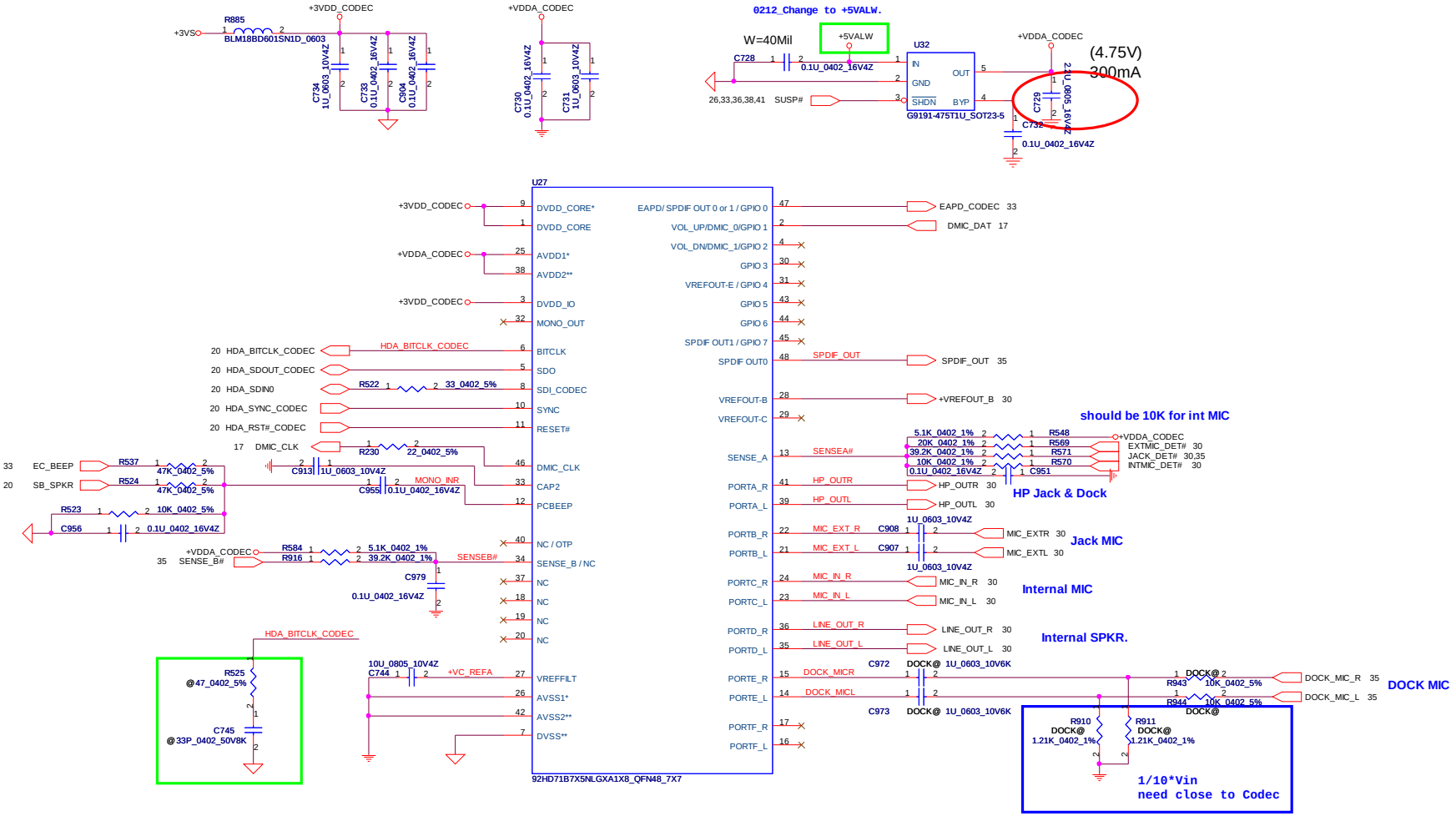

SENSE A		SENSE B	
Port	Resistor	Port	Resistor
A	39.2K	E	39.2K
B	20K	F	20K
C	10K	G	10K
D	5.11K	H	5.11K

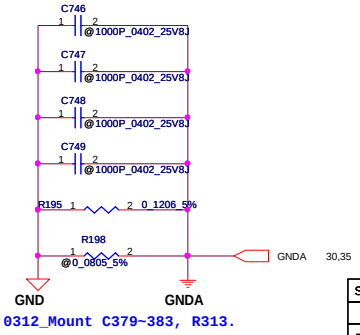

0312_Mount C379~383, R313.

HP_DET#	MIC_DET	LINEOUT	PORT-A <Earphone OUT>	MIC	EQ
0(LOW)	0(LOW)	OFF	ON	ON	Disable
0(LOW)	NC	OFF	ON	OFF	Disable
NC	0(LOW)	ON	OFF	ON	Enable
NC	NC	ON	OFF	OFF	Enable

Security Classification	Compal Secret Data		
Issued Date	2007/08/02	Deciphered Date	2008/08/02

THIS SHEET OF ENGINEERING DRAWING IS THE PROPRIETARY PROPERTY OF COMPAL ELECTRONICS, INC. AND CONTAINS CONFIDENTIAL AND TRADE SECRET INFORMATION. THIS SHEET MAY NOT BE TRANSFERED FROM THE CUSTODY OF THE COMPETENT DIVISION OF R&D DEPARTMENT EXCEPT AS AUTHORIZED BY COMPAL ELECTRONICS, INC. NEITHER THIS SHEET NOR THE INFORMATION IT CONTAINS MAY BE USED BY OR DISCLOSED TO ANY THIRD PARTY WITHOUT PRIOR WRITTEN CONSENT OF COMPAL ELECTRONICS, INC.

Compal Electronics, Inc.

Title: Audio Codec-IDT9271B7

Size: Custom | Document Number: LA-4091P | Rev: 0.1

Date: Thursday, November 08, 2007 | Sheet 29 of 53

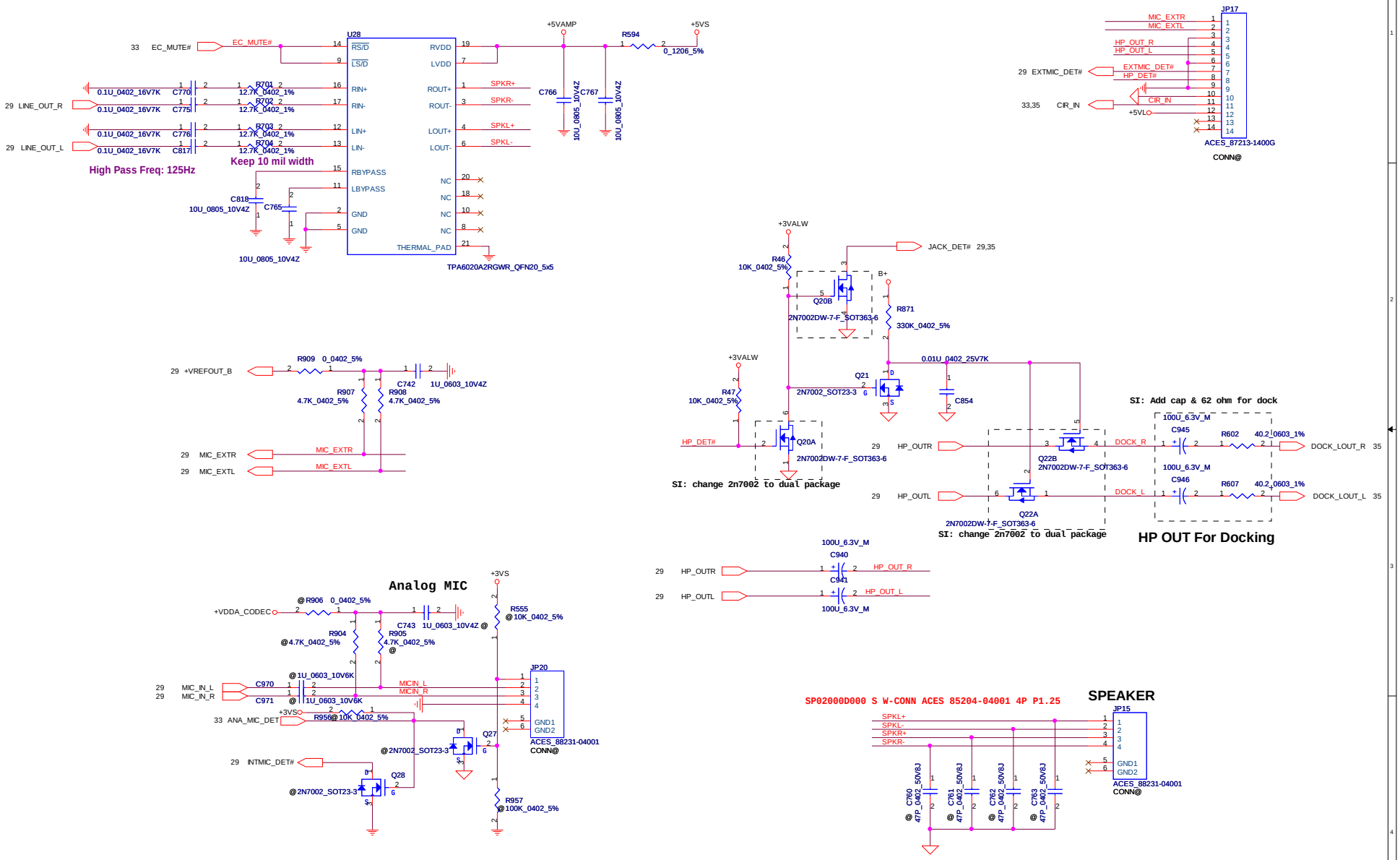

Security Classification	Compal Secret Data		
Issued Date	2007/08/02	Deciphered Date	2008/08/02

THIS SHEET OF ENGINEERING DRAWING IS THE PROPRIETARY PROPERTY OF COMPAL ELECTRONICS, INC. AND CONTAINS CONFIDENTIAL AND TRADE SECRET INFORMATION. THIS SHEET MAY NOT BE TRANSFERED FROM THE CUSTODY OF THE COMPETENT DIVISION OF R&D DEPARTMENT EXCEPT AS AUTHORIZED BY COMPAL ELECTRONICS, INC. NEITHER THIS SHEET NOR THE INFORMATION IT CONTAINS MAY BE USED BY OR DISCLOSED TO ANY THIRD PARTY WITHOUT PRIOR WRITTEN CONSENT OF COMPAL ELECTRONICS, INC.

Compal Electronics, Inc.

Title: **AMP & Audio Jack**

Size	Document Number	Rev
Custom	LA-4091P	0.1

Date: Thursday, November 08, 2007 Sheet 30 of 53

Left side USB CONNECTOR 0

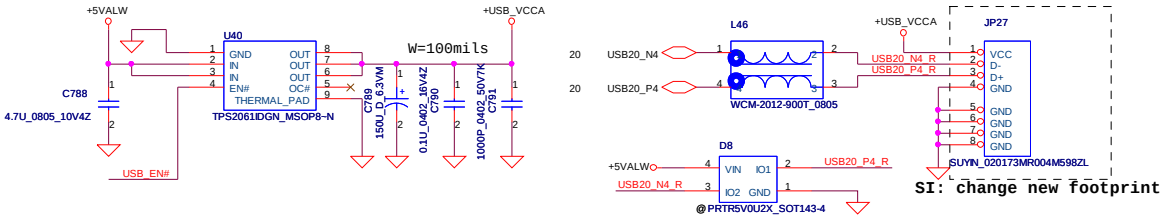

Left side ESATA/USB combination Connector

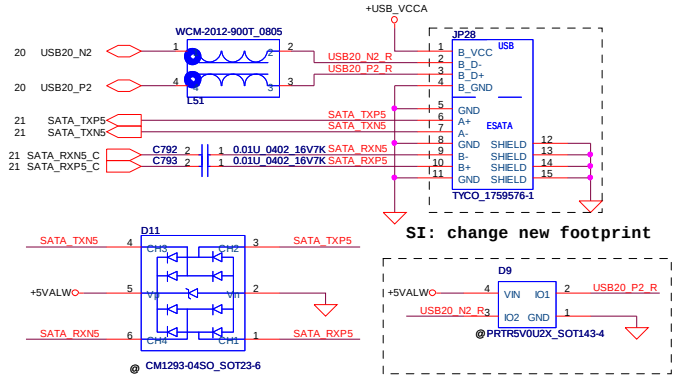

SI: new add for ESD

USB Board Conn

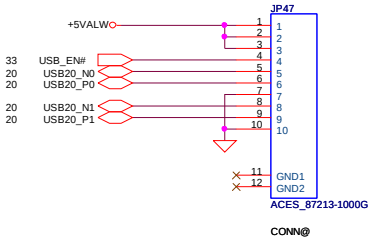

Touch screen

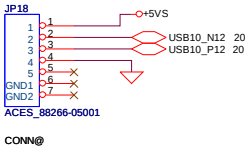

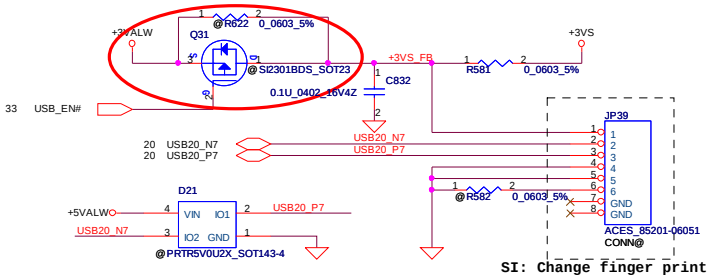

BT Connector

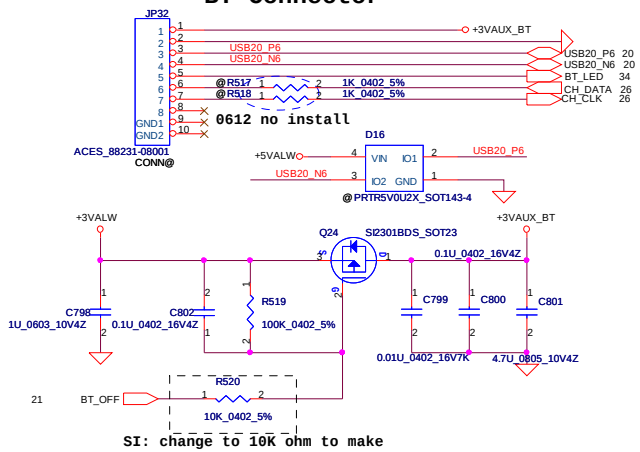

Security Classification	Compal Secret Data		
Issued Date	2007/08/02	Deciphered Date	2008/08/02

THIS SHEET OF ENGINEERING DRAWING IS THE PROPRIETARY PROPERTY OF COMPAL ELECTRONICS, INC. AND CONTAINS CONFIDENTIAL AND TRADE SECRET INFORMATION. THIS SHEET MAY NOT BE TRANSFERED FROM THE CUSTODY OF THE COMPETENT DIVISION OF R&D DEPARTMENT EXCEPT AS AUTHORIZED BY COMPAL ELECTRONICS, INC. NEITHER THIS SHEET NOR THE INFORMATION IT CONTAINS MAY BE USED BY OR DISCLOSED TO ANY THIRD PARTY WITHOUT PRIOR WRITTEN CONSENT OF COMPAL ELECTRONICS, INC.

Compal Electronics, Inc.

Title: **Cover Sheet**

Size	Document Number	Rev
Custom	LA-4091P	0.1

Date: Thursday, November 08, 2007 | Sheet 31 of 53

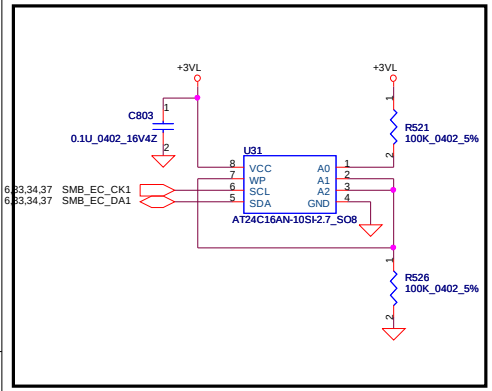

EEPROM need merge to BIOS ROM

SPI Flash (8Mb*1)

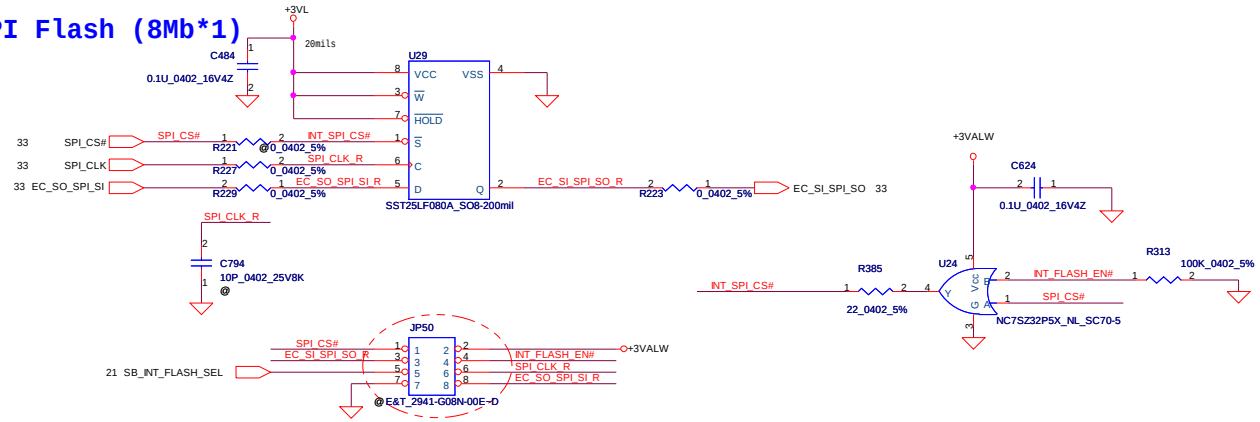

C:Chg. PN to LTC00000200

TPM1.2 on board with 1.02 Firmware

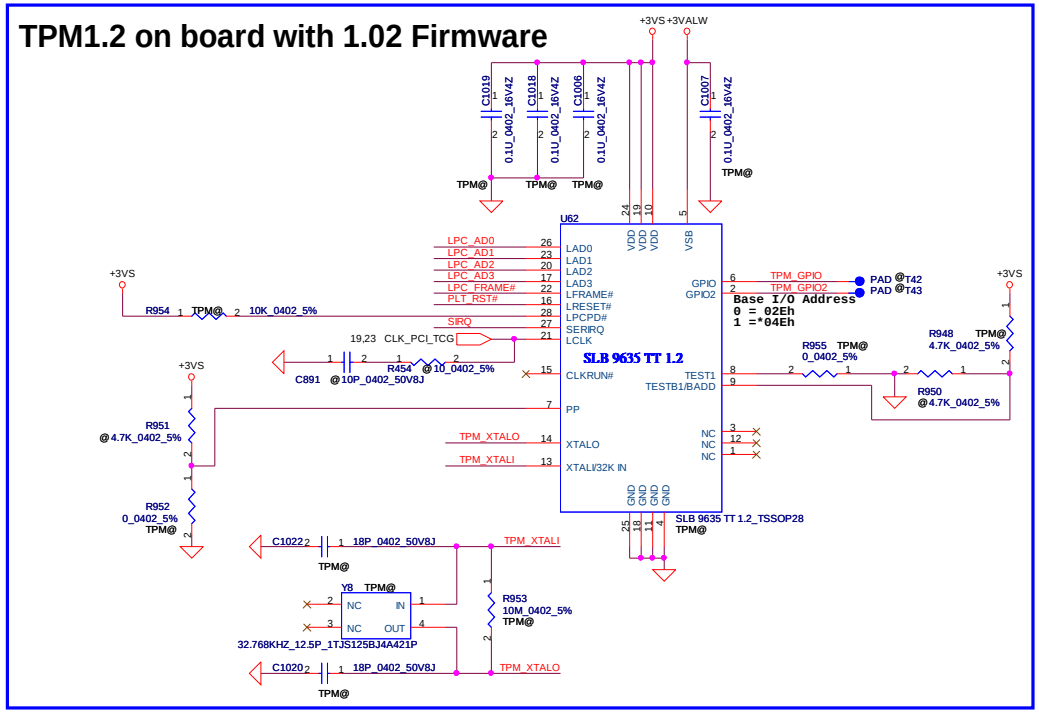

LPC Debug Port

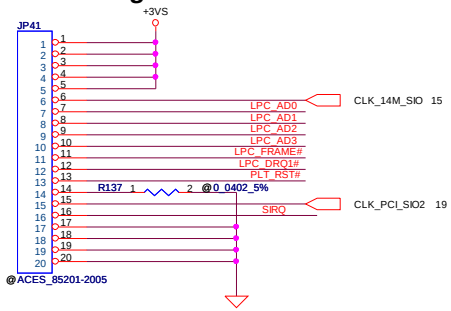

LPC Debug Port

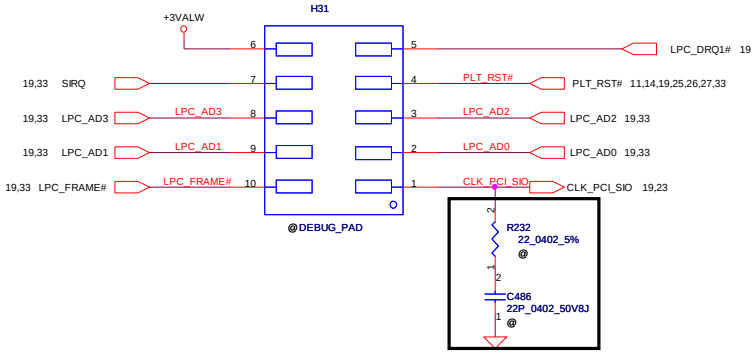

Security Classification	Compal Secret Data		
Issued Date	2007/08/02	Deciphered Date	2008/08/02

THIS SHEET OF ENGINEERING DRAWING IS THE PROPRIETARY PROPERTY OF COMPAL ELECTRONICS, INC. AND CONTAINS CONFIDENTIAL AND TRADE SECRET INFORMATION. THIS SHEET MAY NOT BE TRANSFERED FROM THE CUSTODY OF THE COMPETENT DIVISION OF R&D DEPARTMENT EXCEPT AS AUTHORIZED BY COMPAL ELECTRONICS, INC. NEITHER THIS SHEET NOR THE INFORMATION IT CONTAINS MAY BE USED BY OR DISCLOSED TO ANY THIRD PARTY WITHOUT PRIOR WRITTEN CONSENT OF COMPAL ELECTRONICS, INC.

Compal Electronics, Inc.

Title: TCG/BIOS ROM/PS2/LED/SW

Size: Custom | Document Number: LA-4091P | Rev: 0.1

Date: Thursday, November 08, 2007 | Sheet 32 of 53

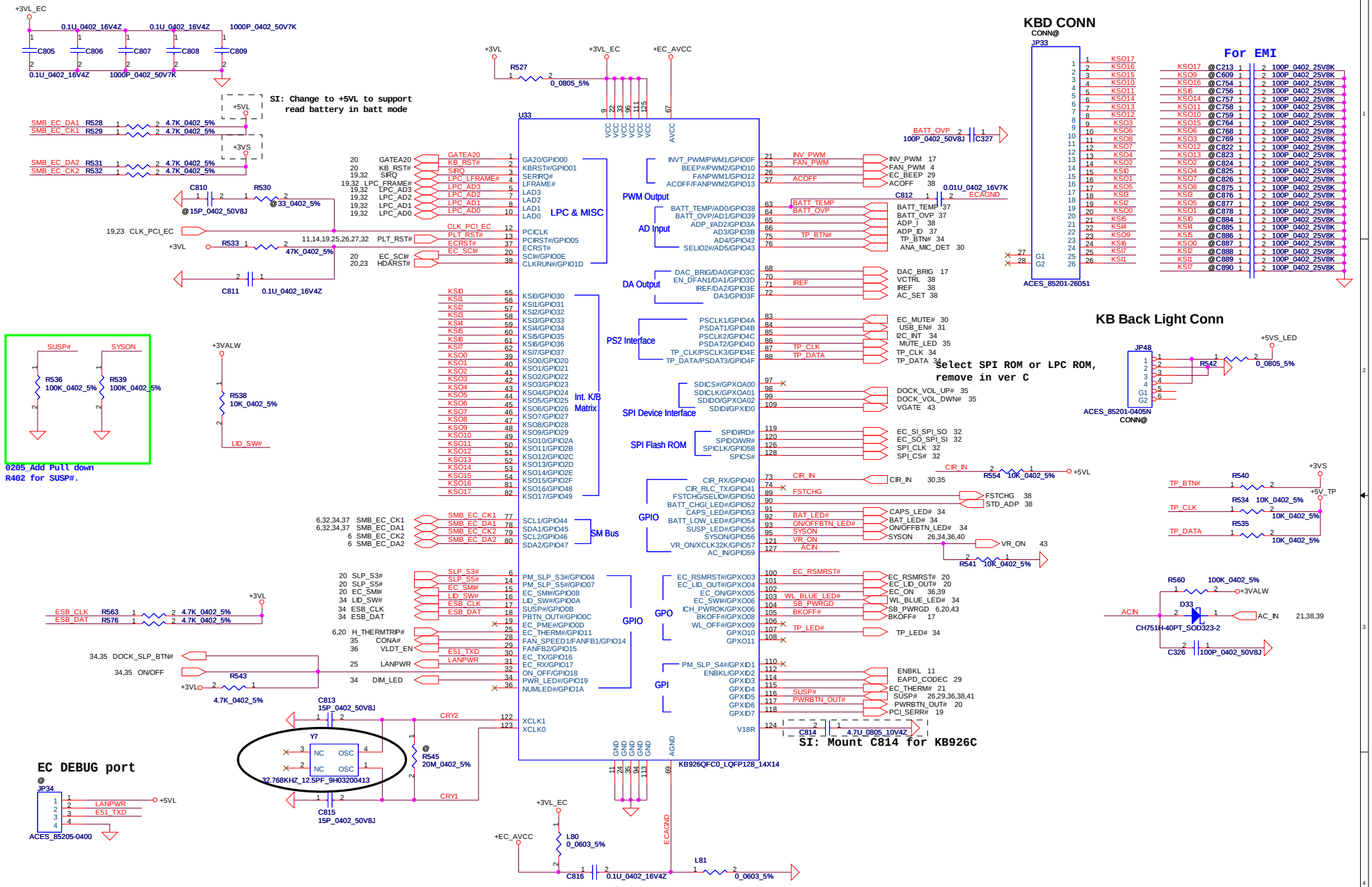

Security Classification	Compal Secret Data		
Issued Date	2007/08/02	Deciphered Date	2008/08/02

THIS SHEET OF ENGINEERING DRAWING IS THE PROPRIETARY PROPERTY OF COMPAL ELECTRONICS, INC. AND CONTAINS CONFIDENTIAL AND TRADE SECRET INFORMATION. THIS SHEET MAY NOT BE TRANSFERED FROM THE CUSTODY OF THE COMPETENT DIVISION OF R&D DEPARTMENT EXCEPT AS AUTHORIZED BY COMPAL ELECTRONICS, INC. NEITHER THIS SHEET NOR THE INFORMATION IT CONTAINS MAY BE USED BY OR DISCLOSED TO ANY THIRD PARTY WITHOUT PRIOR WRITTEN CONSENT OF COMPAL ELECTRONICS, INC.

Compal Electronics, Inc.

Title: **EC KB926/KB conn**

Size	Document Number	Rev
Custom	LA-4091P	0.1

Date: Thursday, November 08, 2007 | Sheet 33 of 53

MDC 1.5 Conn.

Change type 4/25

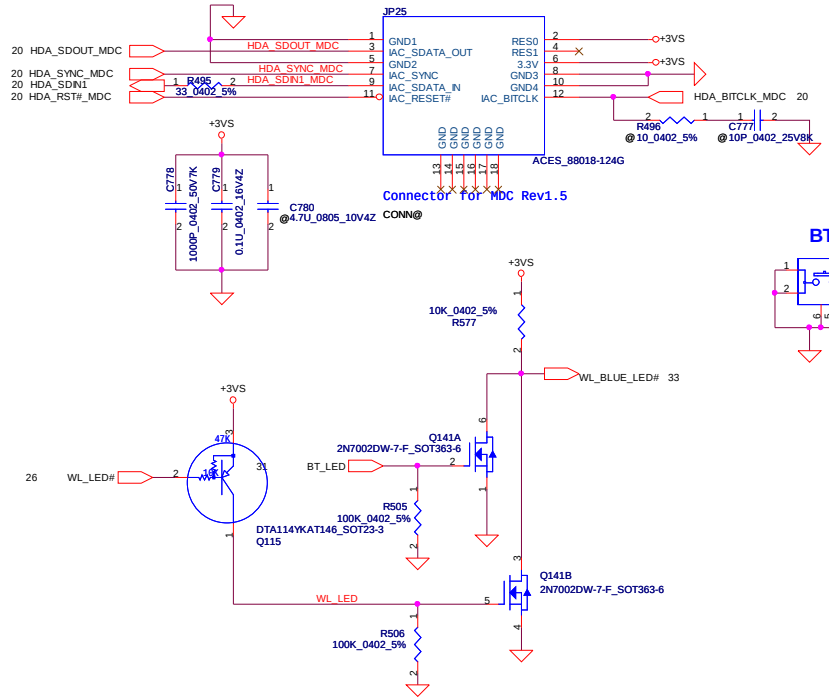

for debug only

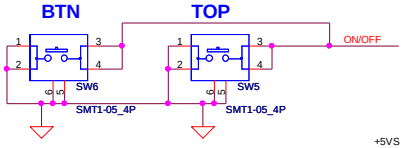

CAPS LOCK LED

SI: Modify LED footprint

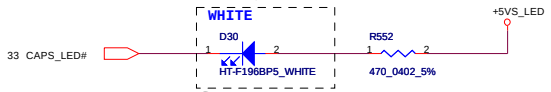

POWER LED(Left 1)

Battery Charge LED(Left 2)

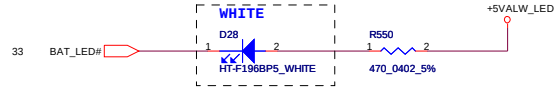

HDD LED(Left 3)

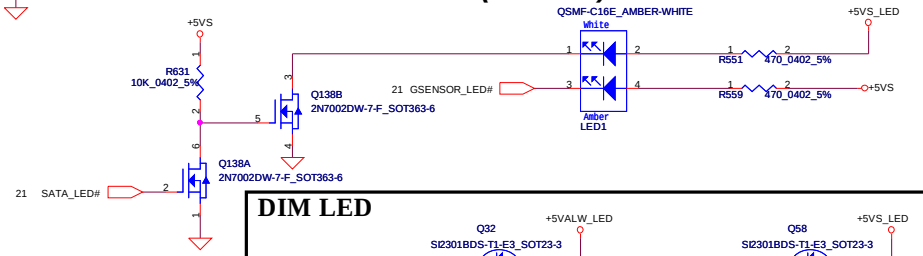

DIM LED

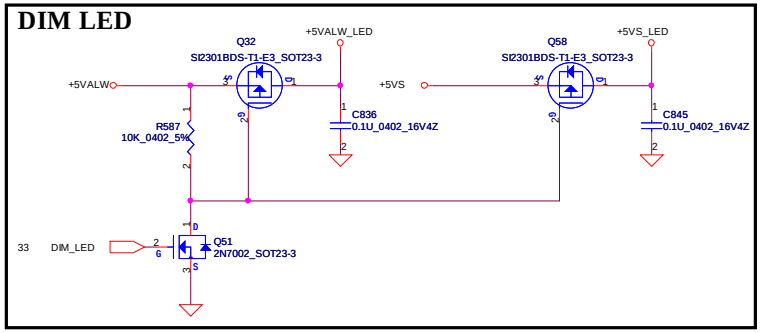

T/P Board (Inculde T/P_ON/OFF)

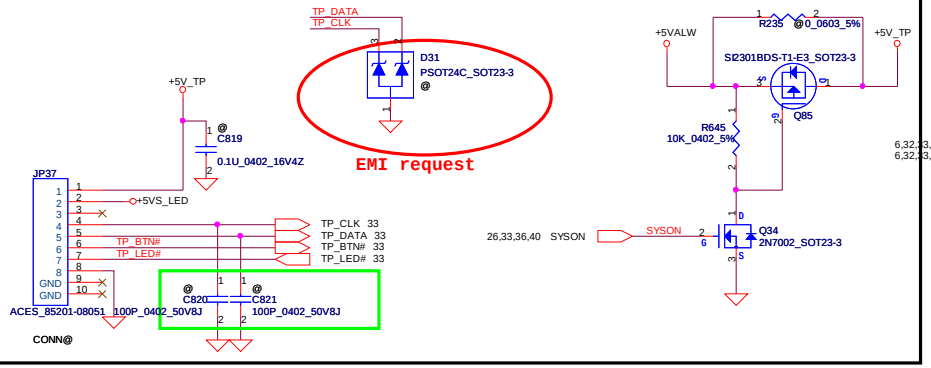

SI: Change to +3VL to support Qplay bottom boot in BATT mode

SWITCH BOARD.

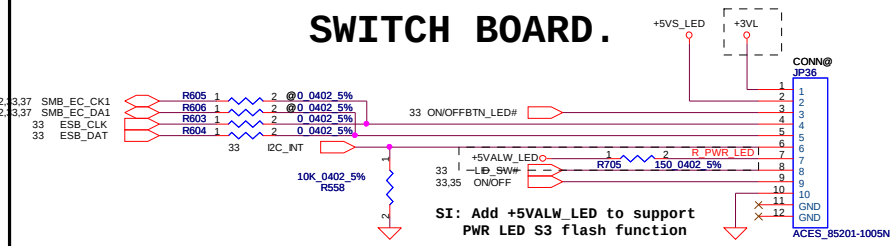

Security Classification	Compal Secret Data		
Issued Date	2007/08/02	Deciphered Date	2008/08/02

THIS SHEET OF ENGINEERING DRAWING IS THE PROPRIETARY PROPERTY OF COMPAL ELECTRONICS, INC. AND CONTAINS CONFIDENTIAL AND TRADE SECRET INFORMATION. THIS SHEET MAY NOT BE TRANSFERED FROM THE CUSTODY OF THE COMPETENT DIVISION OF R&D DEPARTMENT EXCEPT AS AUTHORIZED BY COMPAL ELECTRONICS, INC. NEITHER THIS SHEET NOR THE INFORMATION IT CONTAINS MAY BE USED BY OR DISCLOSED TO ANY THIRD PARTY WITHOUT PRIOR WRITTEN CONSENT OF COMPAL ELECTRONICS, INC.

Compal Electronics, Inc.

Title: MDC/KBD/ON_OFF/LID

Size: Custom | Document Number: LA-4091P | Rev: 0.1

Date: Thursday, November 08, 2007 | Sheet 34 of 53

Atlas/ Saturn Dock

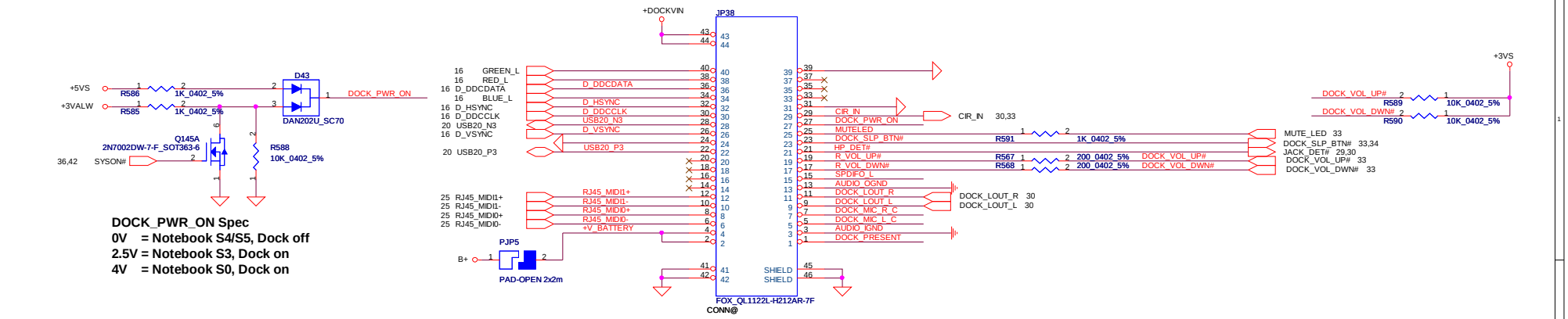

DOCK_PWR_ON Spec
0V = Notebook S4/S5, Dock off
2.5V = Notebook S3, Dock on
4V = Notebook S0, Dock on

need change to reverse type connector

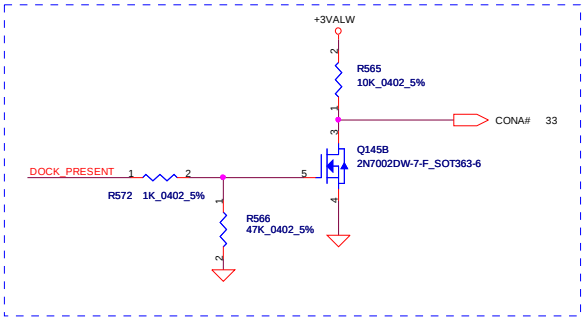

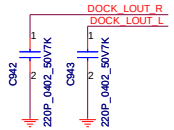

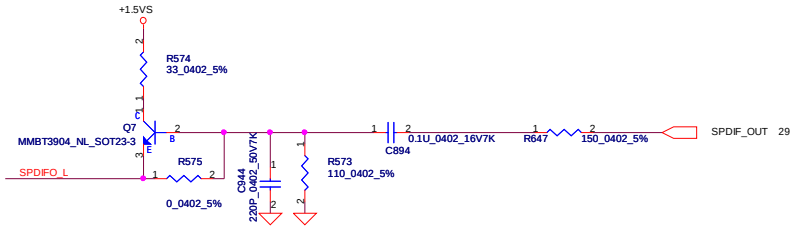

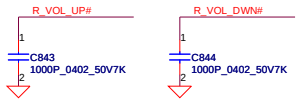

MIC_Dock

Need 600 Ohm 500 mA

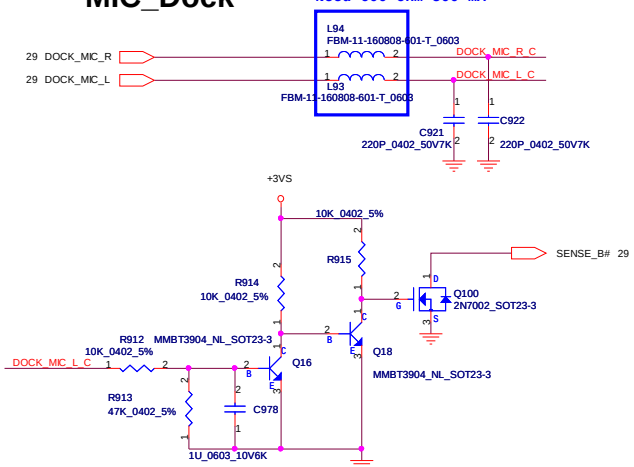

Security Classification	Compal Secret Data		
Issued Date	2007/08/02	Deciphered Date	2008/08/02

THIS SHEET OF ENGINEERING DRAWING IS THE PROPRIETARY PROPERTY OF COMPAL ELECTRONICS, INC. AND CONTAINS CONFIDENTIAL AND TRADE SECRET INFORMATION. THIS SHEET MAY NOT BE TRANSFERED FROM THE CUSTODY OF THE COMPETENT DIVISION OF R&D DEPARTMENT EXCEPT AS AUTHORIZED BY COMPAL ELECTRONICS, INC. NEITHER THIS SHEET NOR THE INFORMATION IT CONTAINS MAY BE USED BY OR DISCLOSED TO ANY THIRD PARTY WITHOUT PRIOR WRITTEN CONSENT OF COMPAL ELECTRONICS, INC.

Compal Electronics, Inc.

Title: **DOCK CONN**

Size: Custom | Document Number: LA-4091P | Rev: 0.1

Date: Thursday, November 08, 2007 | Sheet 35 of 53

+5VALW TO +5VS

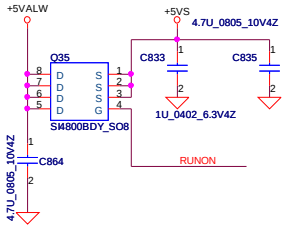

+3VALW TO +3VS

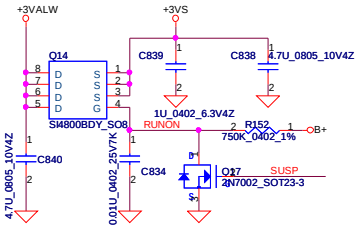

+1.8V TO +1.8VS

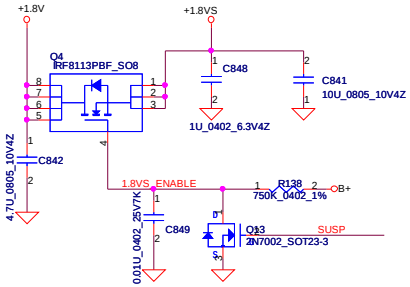

+1.2VALW TO +1.2V_HT

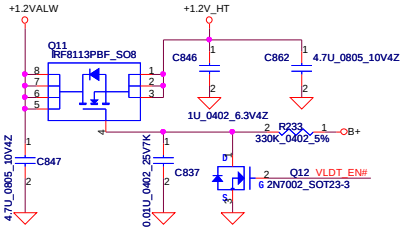

Screw Hole

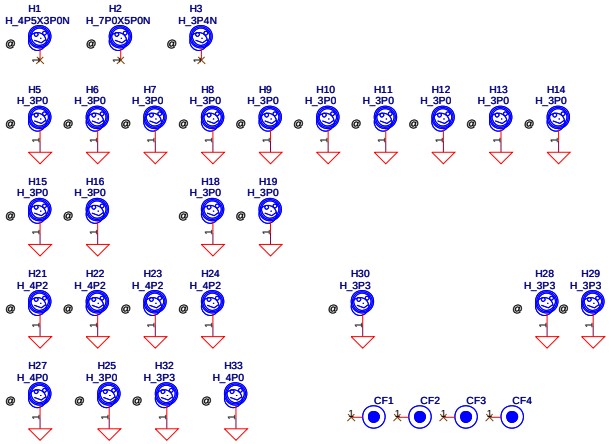

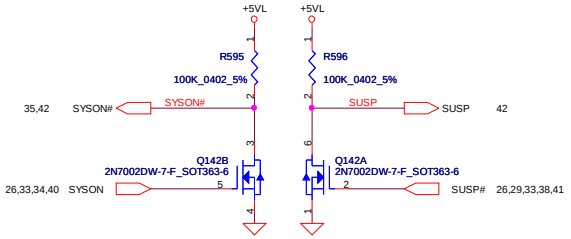

Discharge circuit

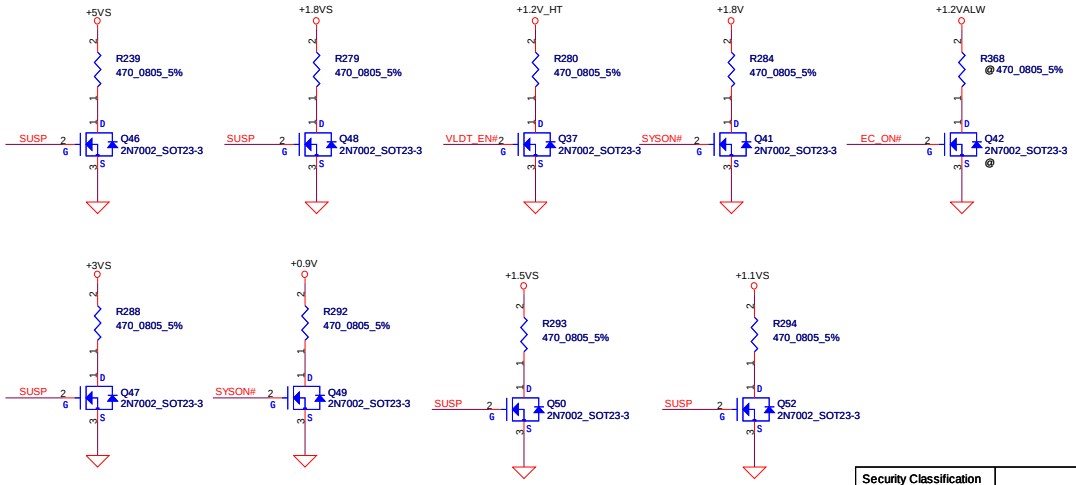

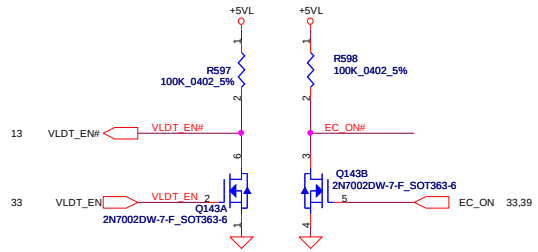

Security Classification	Compal Secret Data		
Issued Date	2007/08/02	Deciphered Date	2008/08/02

THIS SHEET OF ENGINEERING DRAWING IS THE PROPRIETARY PROPERTY OF COMPAL ELECTRONICS, INC. AND CONTAINS CONFIDENTIAL AND TRADE SECRET INFORMATION. THIS SHEET MAY NOT BE TRANSFERED FROM THE CUSTODY OF THE COMPETENT DIVISION OF R&D DEPARTMENT EXCEPT AS AUTHORIZED BY COMPAL ELECTRONICS, INC. NEITHER THIS SHEET NOR THE INFORMATION IT CONTAINS MAY BE USED BY OR DISCLOSED TO ANY THIRD PARTY WITHOUT PRIOR WRITTEN CONSENT OF COMPAL ELECTRONICS, INC.

Compal Electronics, Inc.

Title: **DC/DC Circuits**

Size: Custom | Document Number: LA-4091P | Rev: 0.1

Date: Thursday, November 08, 2007 | Sheet 36 of 53

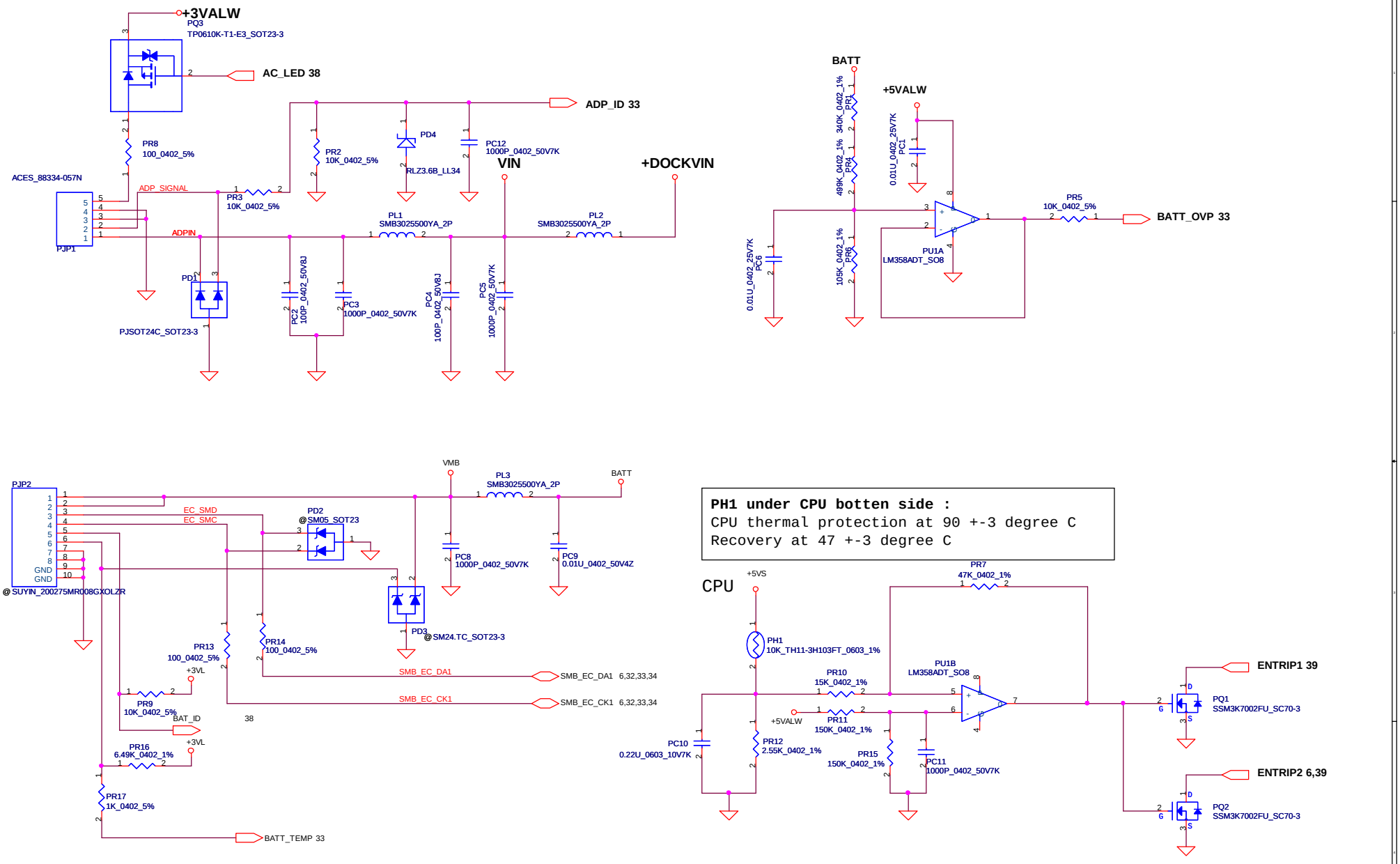

Security Classification	Compal Secret Data		
Issued Date	2007/05/29	Deciphered Date	2008/05/29

THIS SHEET OF ENGINEERING DRAWING IS THE PROPRIETARY PROPERTY OF COMPAL ELECTRONICS, INC. AND CONTAINS CONFIDENTIAL AND TRADE SECRET INFORMATION. THIS SHEET MAY NOT BE TRANSFERED FROM THE CUSTODY OF THE COMPETENT DIVISION OF R&D DEPARTMENT EXCEPT AS AUTHORIZED BY COMPAL ELECTRONICS, INC. NEITHER THIS SHEET NOR THE INFORMATION IT CONTAINS MAY BE USED BY OR DISCLOSED TO ANY THIRD PARTY WITHOUT PRIOR WRITTEN CONSENT OF COMPAL ELECTRONICS, INC.

Compal Electronics, Inc.

Title: **DC Connector/CPU_OTP**

Size | Document Number: **LA-4091P** | Rev: 0.1

Date: Thursday, November 08, 2007 | Sheet 37 of 52

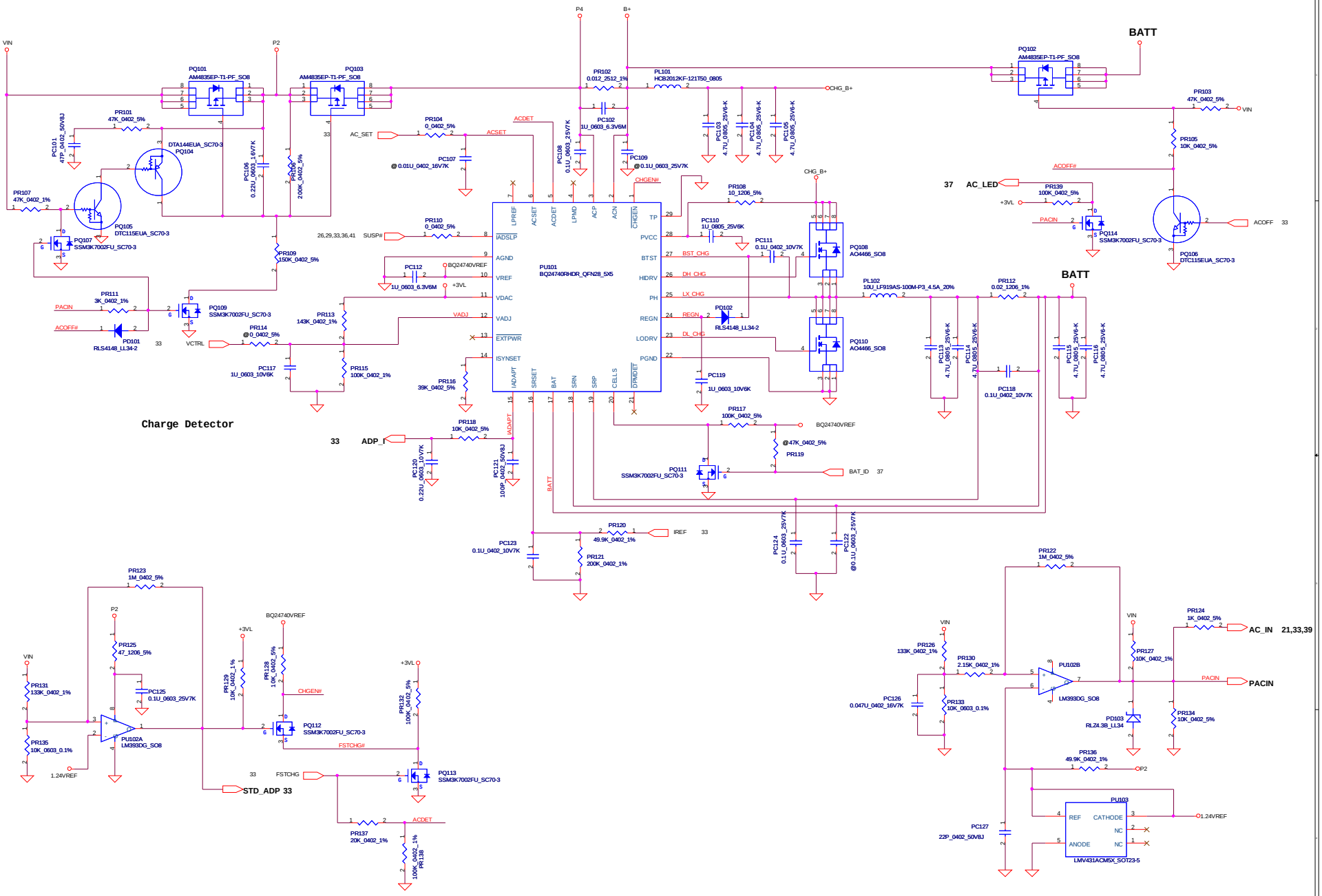

Security Classification	Compal Secret Data		
Issued Date	2007/05/29	Deciphered Date	2008/05/29

THIS SHEET OF ENGINEERING DRAWING IS THE PROPRIETARY PROPERTY OF COMPAL ELECTRONICS, INC. AND CONTAINS CONFIDENTIAL AND TRADE SECRET INFORMATION. THIS SHEET MAY NOT BE TRANSFERED FROM THE CUSTODY OF THE COMPETENT DIVISION OF R&D DEPARTMENT EXCEPT AS AUTHORIZED BY COMPAL ELECTRONICS, INC. NEITHER THIS SHEET NOR THE INFORMATION IT CONTAINS MAY BE USED BY OR DISCLOSED TO ANY THIRD PARTY WITHOUT PRIOR WRITTEN CONSENT OF COMPAL ELECTRONICS, INC.

Compal Electronics, Inc.

Title: **Charger**

Size	Document Number	Rev
	LA-4091P	0.1

Date: Thursday, November 08, 2007 Sheet 38 of 52

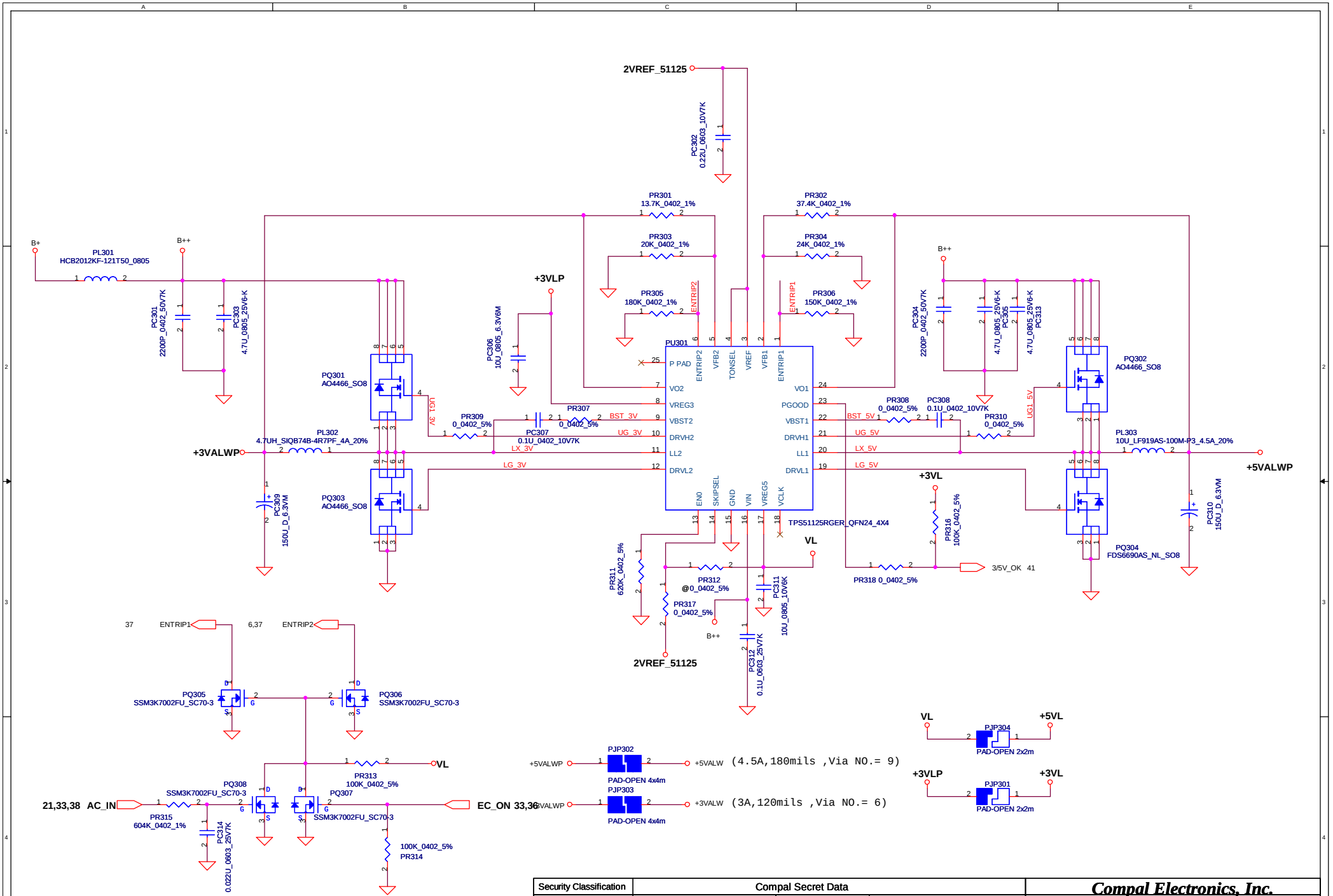

Security Classification	Compal Secret Data		
Issued Date	2007/05/29	Deciphered Date	2008/05/29

THIS SHEET OF ENGINEERING DRAWING IS THE PROPRIETARY PROPERTY OF COMPAL ELECTRONICS, INC. AND CONTAINS CONFIDENTIAL AND TRADE SECRET INFORMATION. THIS SHEET MAY NOT BE TRANSFERED FROM THE CUSTODY OF THE COMPETENT DIVISION OF R&D DEPARTMENT EXCEPT AS AUTHORIZED BY COMPAL ELECTRONICS, INC. NEITHER THIS SHEET NOR THE INFORMATION IT CONTAINS MAY BE USED BY OR DISCLOSED TO ANY THIRD PARTY WITHOUT PRIOR WRITTEN CONSENT OF COMPAL ELECTRONICS, INC.

Compal Electronics, Inc.

Title: **3.3VALWP/5VALWP**

Size: | Document Number: *LA-4091P* | Rev: 0.1

Date: Thursday, November 08, 2007 | Sheet 39 of 52

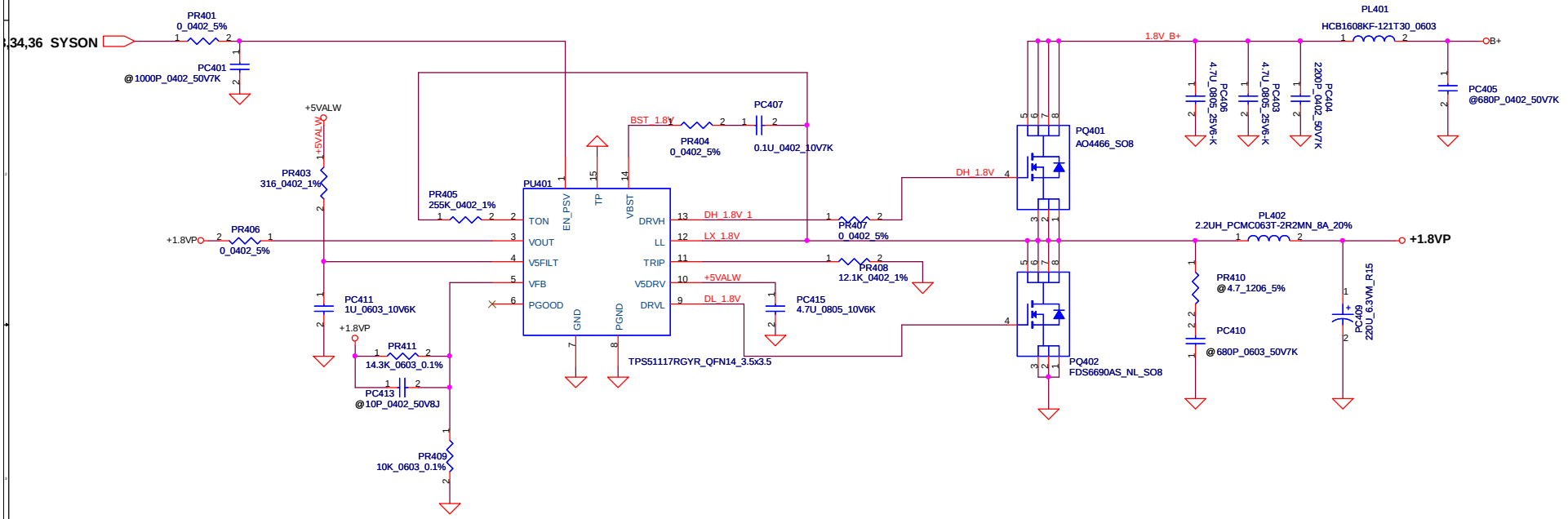

(7A,280mils ,Via NO.= 14)

Security Classification	Compal Secret Data		
Issued Date	2007/05/29	Deciphered Date	2008/05/29

THIS SHEET OF ENGINEERING DRAWING IS THE PROPRIETARY PROPERTY OF COMPAL ELECTRONICS, INC. AND CONTAINS CONFIDENTIAL AND TRADE SECRET INFORMATION. THIS SHEET MAY NOT BE TRANSFERRED FROM THE CUSTODY OF THE COMPETENT DIVISION OF R&D DEPARTMENT EXCEPT AS AUTHORIZED BY COMPAL ELECTRONICS, INC. NEITHER THIS SHEET NOR THE INFORMATION IT CONTAINS MAY BE USED BY OR DISCLOSED TO ANY THIRD PARTY WITHOUT PRIOR WRITTEN CONSENT OF COMPAL ELECTRONICS, INC.

Compal Electronics, Inc.

Title: **1.8VP**

Size | Document Number: *LA-4091P* | Rev: 0.1

Date: Thursday, November 08, 2007 | Sheet 40 of 52

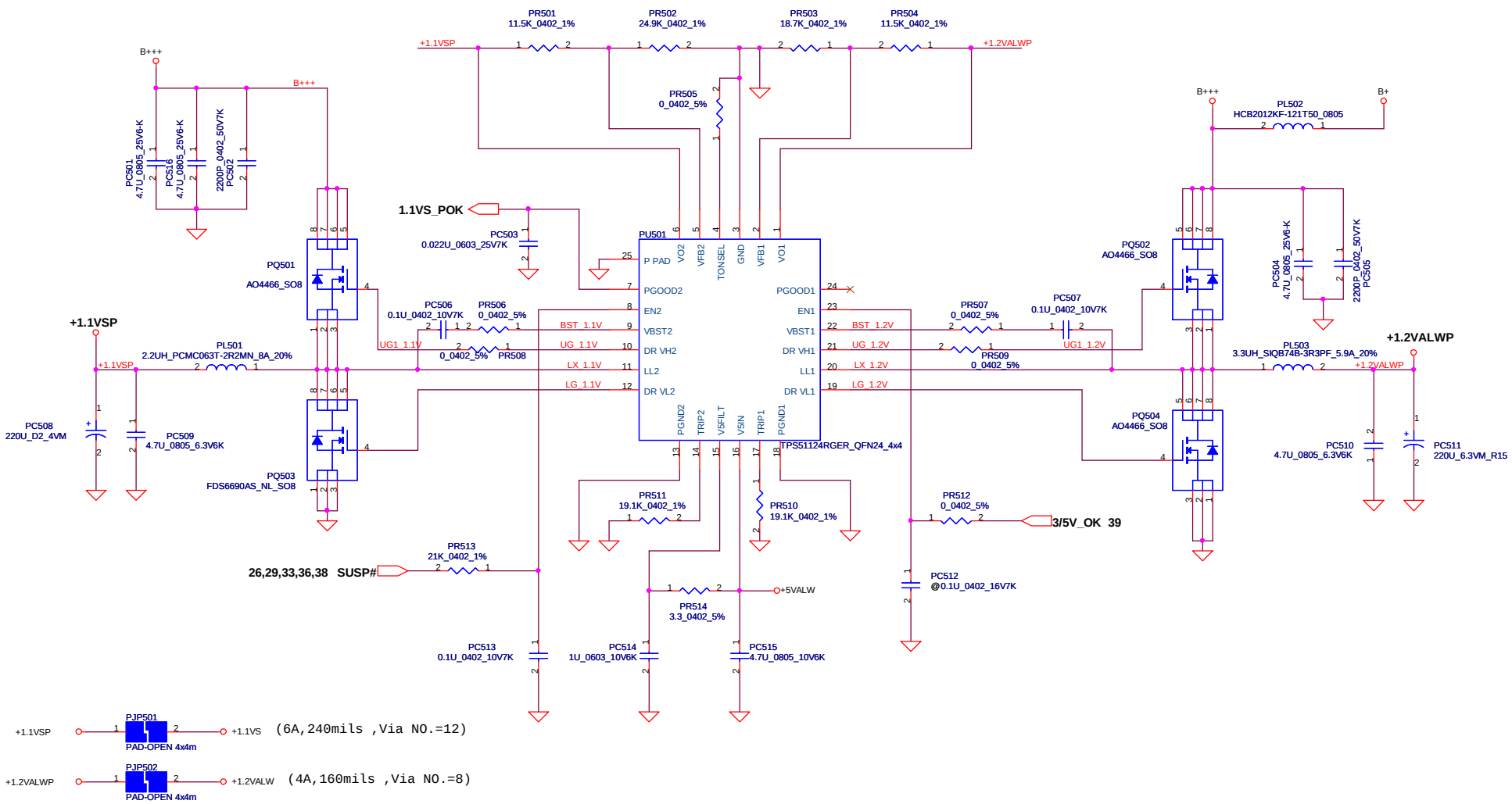

Security Classification	Compal Secret Data		
Issued Date	2007/05/29	Deciphered Date	2008/05/29

THIS SHEET OF ENGINEERING DRAWING IS THE PROPRIETARY PROPERTY OF COMPAL ELECTRONICS, INC. AND CONTAINS CONFIDENTIAL AND TRADE SECRET INFORMATION. THIS SHEET MAY NOT BE TRANSFERED FROM THE CUSTODY OF THE COMPETENT DIVISION OF R&D DEPARTMENT EXCEPT AS AUTHORIZED BY COMPAL ELECTRONICS, INC. NEITHER THIS SHEET NOR THE INFORMATION IT CONTAINS MAY BE USED BY OR DISCLOSED TO ANY THIRD PARTY WITHOUT PRIOR WRITTEN CONSENT OF COMPAL ELECTRONICS, INC.

Compal Electronics, Inc.

Title: **1.1VSP/1.2VALWP**

Size: | Document Number: *LA-4091P* | Rev: 0.1

Date: Thursday, November 08, 2007 | Sheet 41 of 52

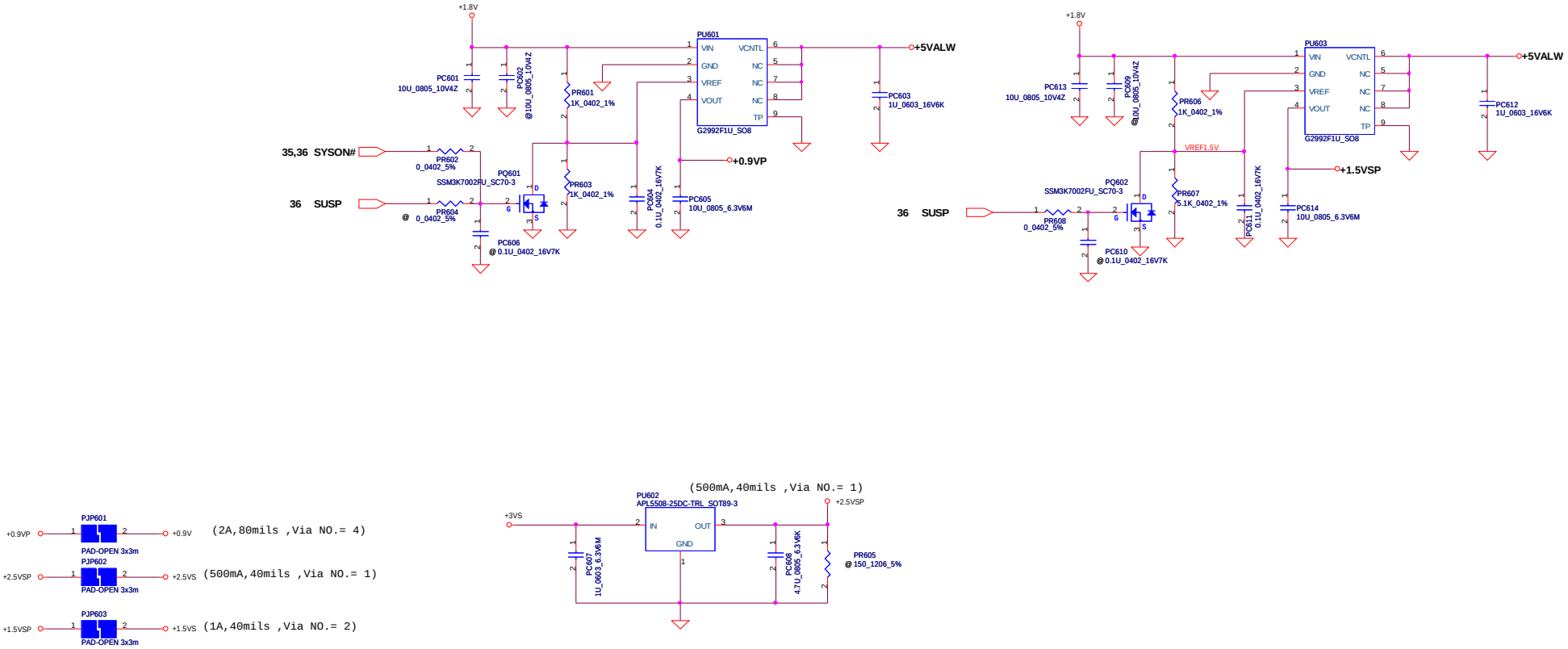

Security Classification	Compal Secret Data		
Issued Date	2006/11/23	Deciphered Date	2007/11/23

THIS SHEET OF ENGINEERING DRAWING IS THE PROPRIETARY PROPERTY OF COMPAL ELECTRONICS, INC. AND CONTAINS CONFIDENTIAL AND TRADE SECRET INFORMATION. THIS SHEET MAY NOT BE TRANSFERED FROM THE CUSTODY OF THE COMPETENT DIVISION OF R&D DEPARTMENT EXCEPT AS AUTHORIZED BY COMPAL ELECTRONICS, INC. NEITHER THIS SHEET NOR THE INFORMATION IT CONTAINS MAY BE USED BY OR DISCLOSED TO ANY THIRD PARTY WITHOUT PRIOR WRITTEN CONSENT OF COMPAL ELECTRONICS, INC.

Compal Electronics, Inc.

Title: **0.9VSP/2.5VSP/1.5VSP**

Size	Document Number	Rev
	LA-4091P	0.2

Date: Thursday, November 08, 2007 | Sheet 42 of 52

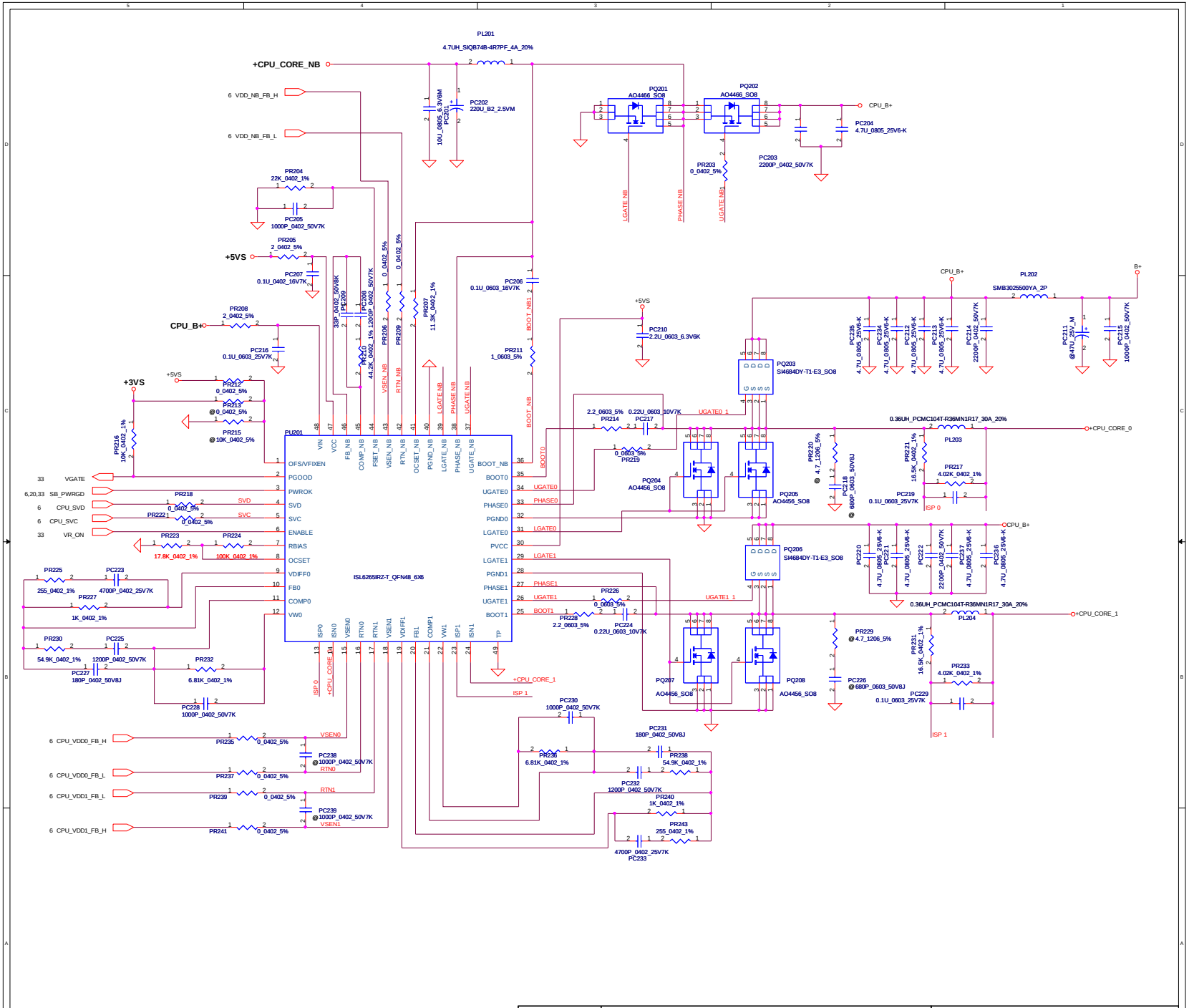

Security Classification	Compal Secret Data		
Issued Date	2006/11/23	Deciphered Date	2007/11/23

THIS SHEET OF ENGINEERING DRAWING IS THE PROPRIETARY PROPERTY OF COMPAL ELECTRONICS, INC. AND CONTAINS CONFIDENTIAL AND TRADE SECRET INFORMATION. THIS SHEET MAY NOT BE TRANSFERED FROM THE CUSTODY OF THE COMPETENT DIVISION OF R&D DEPARTMENT EXCEPT AS AUTHORIZED BY COMPAL ELECTRONICS, INC. NEITHER THIS SHEET NOR THE INFORMATION IT CONTAINS MAY BE USED BY OR DISCLOSED TO ANY THIRD PARTY WITHOUT PRIOR WRITTEN CONSENT OF COMPAL ELECTRONICS, INC.

Compal Electronics, Inc.

Title: **+CPU_CORE**

Size: | Document Number: **LA-4091P** | Rev: 0.2

Date: Thursday, November 08, 2007 | Sheet 43 of 52

Version Change List (P. I. R. List) for Power Circuit

Item	Page #	Title	Date	Request Owner	Issue Description	Solution Description	Rev.
1	40	1.8VP	10/23	Compal	for power requset	PU401 change the IC from "S IC RT8204PQW WQFN 16P" to "S IC TPS51117RGYR QFN 14P".	
2	38	Charger	10/30	Compal	for power requset	PQ104 swap the PQ104 1,3 Pin	
3	39	3V/5V	10/30	Compal	for power requset	Change PR301 to 13.7K modify output voltage	
4	39	3V/5V	10/30	Compal	for power requset	Change PR305 to 180K modify OCP	
5	39	3V/5V	10/30	Compal	for power requset	Change PR306 to 150K modify OCP	
6	39	3V/5V	10/30	Compal	for power requset	Change PR311 to 620K	
7	39	3V/5V	10/30	Compal	for power requset	Change PR315 to 604K modify sequence	
8	41	+1.1VSP	10/30	Compal	for power requset	Change PR510 to 19.1K modify OCP	
9	41	+1.2VALWP	10/30	Compal	for power requset	Change PR511 to 19.1K modify OCP	
10	38	Charger	10/30	Compal	for power requset	Del PR119	
11	43	CPU_CORE	10/30	Compal	for power requset	Change PC202 to B2 type for ME limit	
12	43	CPU_CORE	10/30	Compal	for power requset	Change PR223 to 17.8K and PR224 to 100K modify OCP	
13	43	CPU_CORE	10/30	Compal	for power requset	Change PR221,PR231 to 16.5K and PR217,PR233 to 4.02K for CPU_CORE compensation	
14	37	DC connector	10/30	Compal	for power requset	Add PR3,PD4,PC12 for ADP_ID function	
15	39	3V/5V	10/30	Compal	for power requset	Add PR317,PR318	
16	38	Charger	10/30	Compal	for power requset	Change net from +3VLP to +3VL	
17	41	+1.1VSP	10/30	Compal	for power requset	Change PR513 to 21K for HW power scquence.	

THIS SHEET OF ENGINEERING DRAWING IS THE PROPRIETARY PROPERTY OF COMPAL ELECTRONICS, INC. AND CONTAINS CONFIDENTIAL AND TRADE SECRET INFORMATION. THIS SHEET MAY NOT BE TRANSFERED FROM THE CUSTODY OF THE COMPETENT DIVISION OF R&D DEPARTMENT EXCEPT AS AUTHORIZED BY COMPAL ELECTRONICS, INC. NEITHER THIS SHEET NOR THE INFORMATION IT CONTAINS MAY BE USED BY OR DISCLOSED TO ANY THIRD PARTY WITHOUT PRIOR WRITTEN CONSENT OF COMPAL ELECTRONICS, INC.

HW4 Product Improvement Record (P.I.R.)

RTC

ZZZ2

45@RTC

PCB

ZZZ

PCB 03X LA-4091P REV0 M/B

Security Classification	Compal Secret Data		
Issued Date	2007/5/18	Deciphered Date	2008/5/18

THIS SHEET OF ENGINEERING DRAWING IS THE PROPRIETARY PROPERTY OF COMPAL ELECTRONICS, INC. AND CONTAINS CONFIDENTIAL AND TRADE SECRET INFORMATION. THIS SHEET MAY NOT BE TRANSFERED FROM THE CUSTODY OF THE COMPETENT DIVISION OF R&D DEPARTMENT EXCEPT AS AUTHORIZED BY COMPAL ELECTRONICS, INC. NEITHER THIS SHEET NOR THE INFORMATION IT CONTAINS MAY BE USED BY OR DISCLOSED TO ANY THIRD PARTY WITHOUT PRIOR WRITTEN CONSENT OF COMPAL ELECTRONICS, INC.

Compal Electronics, Inc.

Title: PIR

Size | Document Number | Rev 0.1

Date: Thursday, November 08, 2007 | Sheet 45 of 53