Revisions			Approvals			
REV	ECN NO.	Description Of Change	DATE	DFTG.	ENGR.	REL.

TABLE OF CONTENTS

PAGE

4 - CLOCK GENERATOR
5-7 - BANIAS PROCESSOR
8-10 - ODEM
11-14 - DDR
15-18 - ATI_M10_P
19-20 - VGA DDR
21 -LCD&TV CONNECTOR INTERFACE
22- CRT INTERFACE
23-25- ICH4-M
26 - HDD CONNECTOR
27 - CD-ROM CONNECTOR
28 - USB PORT
29 - GI-GA LAN
30 - LAN INTERFACE
31- RJ45 CONN
32- CHVIAS II
33 - FLASH ROM & IR
32- 1394 CONTROLLER

PAGE

35- KEYBOARD CONNECTOR & TOUCH PAD & BUTTON
36 - LID SWITCH/LEDS
37 - CARDBUS CONTROLLER
38 - PCMCIA CARD
39- PC CARD CONNECTOR
40 - MINI PCI
41 - AC97 CODEC
42 - VR & MIC JACK
43 - AMP
44- MDC I/F
45 - THERMAL SENSOR & FAN CONTROLLER
46 - DECOUPLING CAPS
47 - DRILL HOLE
48 - HIGH SPEED
49 - PULL UPS
50-58 - POWER

DATE	CHANGE NO.	REV

	EE	DATE	POWER	DATE
DRAWER				
CHECK				
DESIGN				
RESPOSFOR				

SIZE = B VER :
FILE NAME : XXXX-XXXXXX-XX
P/N XXXXXXXXXXXX DATE BEGINNING : dd / mm / yyyy

INVENTEC

TITLE Cricket 5.0

SIZE	CODE	DOC. NUMBER	REV
A3	CS	QC5420	X01

SHEET 1 OF 57

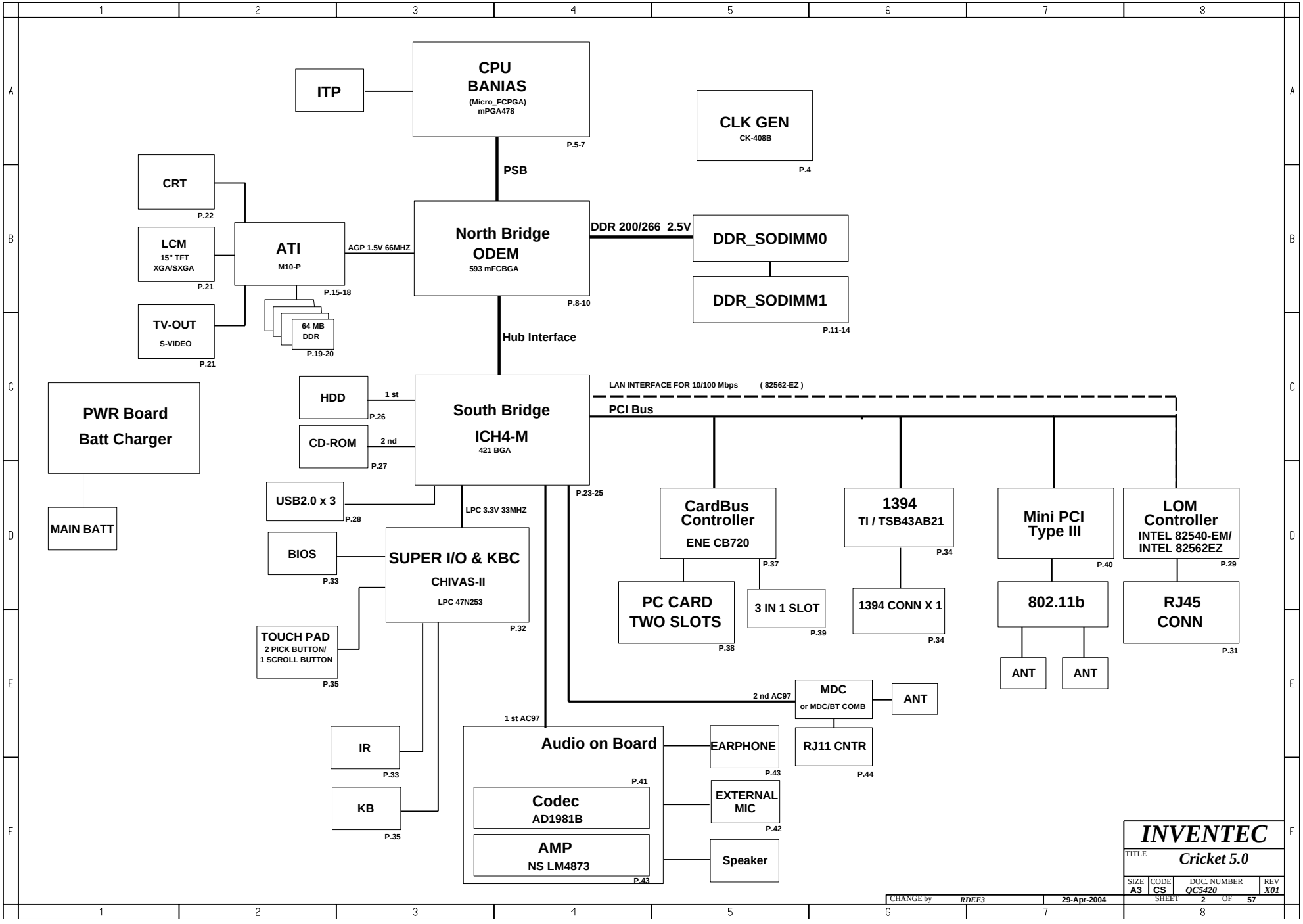
ITP
CPU
BANIAS
(Micro_FCPGA)
mPGA478
P.5-7
CLK GEN
CK-408B
P.4
PSB
CRT
P.22
LCM
15" TFT
XGA/SXGA
P.21
ATI
M10-P
P.15-18
AGP 1.5V 66MHZ
North Bridge
ODEM
593 mFCBGA
P.8-10
DDR 200/266 2.5V
DDR_SODIMM0
DDR_SODIMM1
P.11-14
TV-OUT
S-VIDEO
P.21
64 MB
DDR
P.19-20
Hub Interface
PWR Board
Batt Charger
MAIN BATT
HDD
1 st
P.26
CD-ROM
2 nd
P.27
South Bridge
ICH4-M
421 BGA
P.23-25
LAN INTERFACE FOR 10/100 Mbps
(82562-EZ)
PCI Bus
USB2.0 x 3
P.28
LPC 3.3V 33MHZ
BIOS
P.33
SUPER I/O & KBC
CHIVAS-II
LPC 47N253
P.32
TOUCH PAD
2 PICK BUTTON/
1 SCROLL BUTTON
P.35
CardBus
Controller
ENE CB720
P.37
PC CARD
TWO SLOTS
P.38
3 IN 1 SLOT
P.39
1394
TI / TSB43AB21
P.34
1394 CONN X 1
P.34
Mini PCI
Type III
P.40
802.11b
ANT
ANT
LOM
Controller
INTEL 82540-EM/
INTEL 82562EZ
P.29
RJ45
CONN
P.31
2 nd AC97
MDC
or MDC/BT COMB
ANT
RJ11 CNTR
P.44
1 st AC97
IR
P.33
KB
P.35
Audio on Board
P.41
Codec
AD1981B
AMP
NS LM4873
P.43
EARPHONE
P.43
EXTERNAL
MIC
P.42
Speaker
INVENTEC
TITLE
Cricket 5.0
SIZE A3
CODE CS
DOC. NUMBER QC5420
REV X01
SHEET 2 OF 57
CHANGE by RDEE3
29-Apr-2004

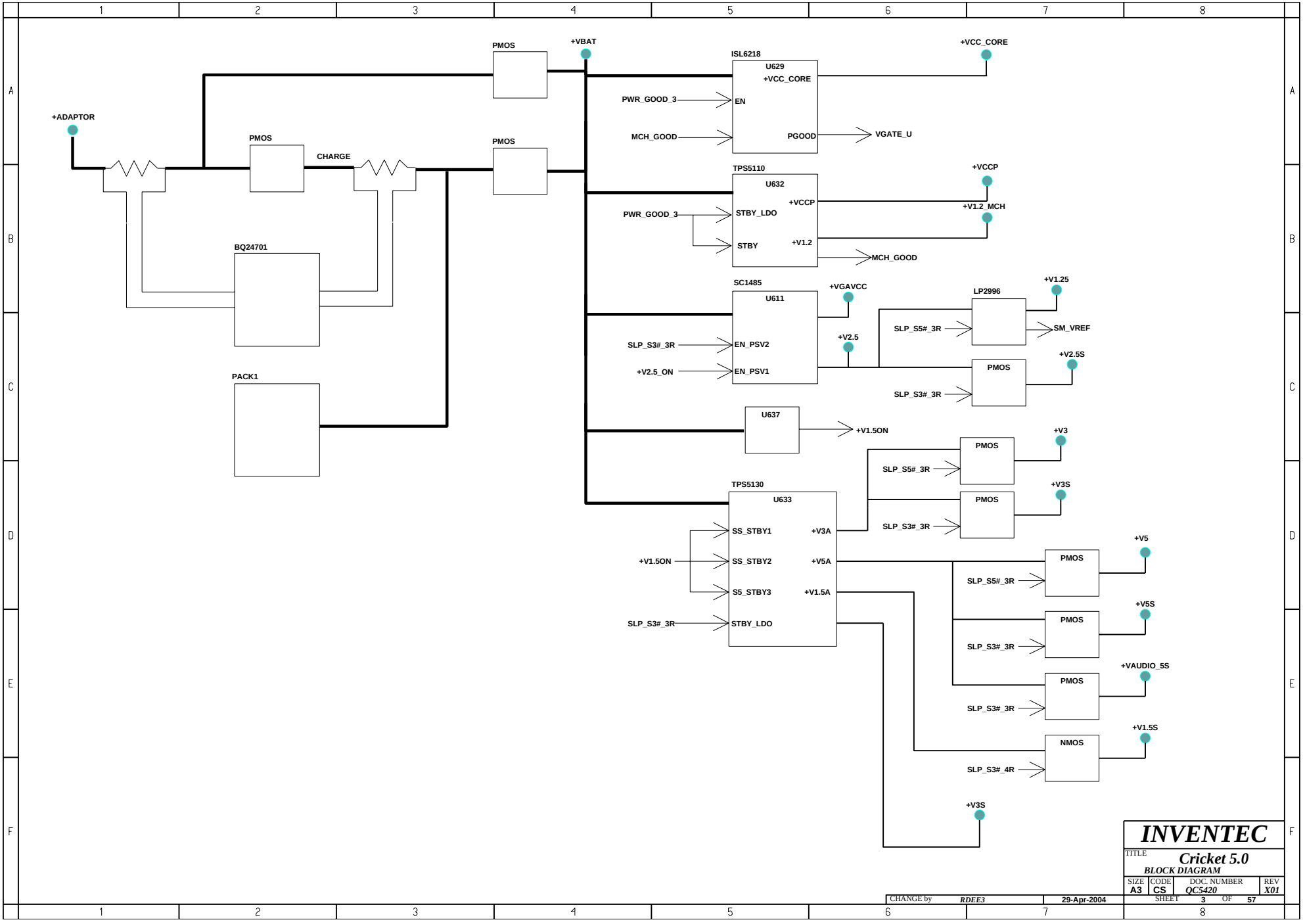
+ADAPTOR
PMOS
CHARGE
PMOS
PMOS
+VBAT
BQ24701
PACK1
ISL6218
U629
+VCC_CORE
PWR_GOOD_3
EN
MCH_GOOD
PGOOD
VGATE_U
+VCC_CORE
TPS5110
U632
+VCCP
PWR_GOOD_3
STBY_LDO
+VCCP
+V1.2_MCH
STBY
+V1.2
MCH_GOOD
SC1485
U611
+VGAVCC
SLP_S3#_3R
EN_PSV2
+V2.5
+V2.5_ON
EN_PSV1
LP2996
+V1.25
SLP_S5#_3R
SM_VREF
PMOS
+V2.5S
SLP_S3#_3R
U637
+V1.5ON
PMOS
+V3
SLP_S5#_3R
TPS5130
U633
PMOS
+V3S
SLP_S3#_3R
SS_STBY1
+V3A
+V1.5ON
SS_STBY2
+V5A
S5_STBY3
+V1.5A
SLP_S3#_3R
STBY_LDO
PMOS
+V5
SLP_S5#_3R
PMOS
+V5S
SLP_S3#_3R
PMOS
+VAUDIO_5S
SLP_S3#_3R
NMOS
+V1.5S
SLP_S3#_4R
+V3S
INVENTEC
TITLE
Cricket 5.0
BLOCK DIAGRAM
SIZE A3
CODE CS
DOC. NUMBER QC5420
REV X01
CHANGE by RDEE3
29-Apr-2004
SHEET 3 OF 57

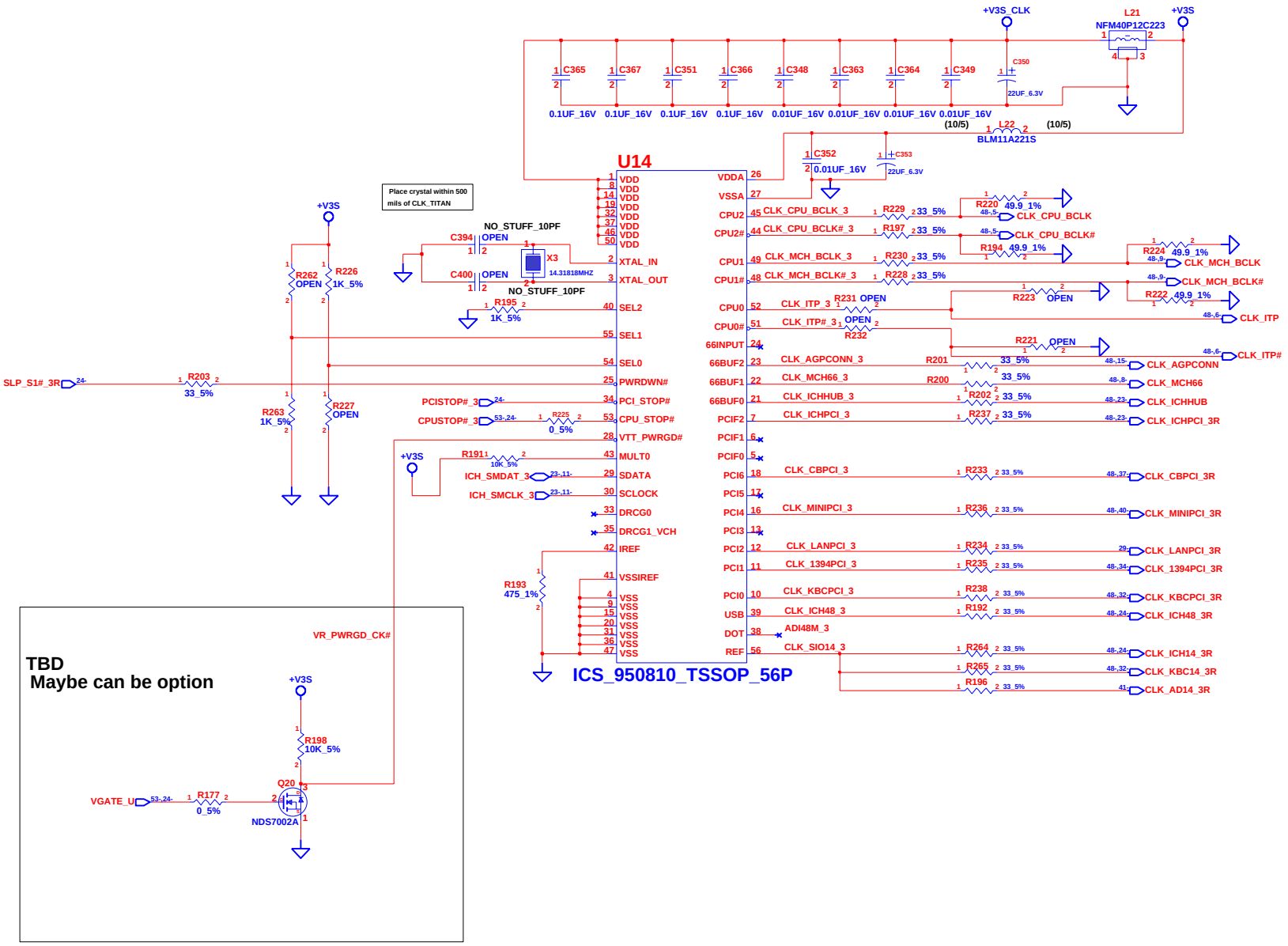

CHANGE by	RDEE3	29-Apr-2004	

INVENTEC

TITLE: *Cricket 5.0*
CLK GENERATOR

SIZE	CODE	DOC. NUMBER	REV
A3	CS	QC5420	X01

SHEET 4 OF 57

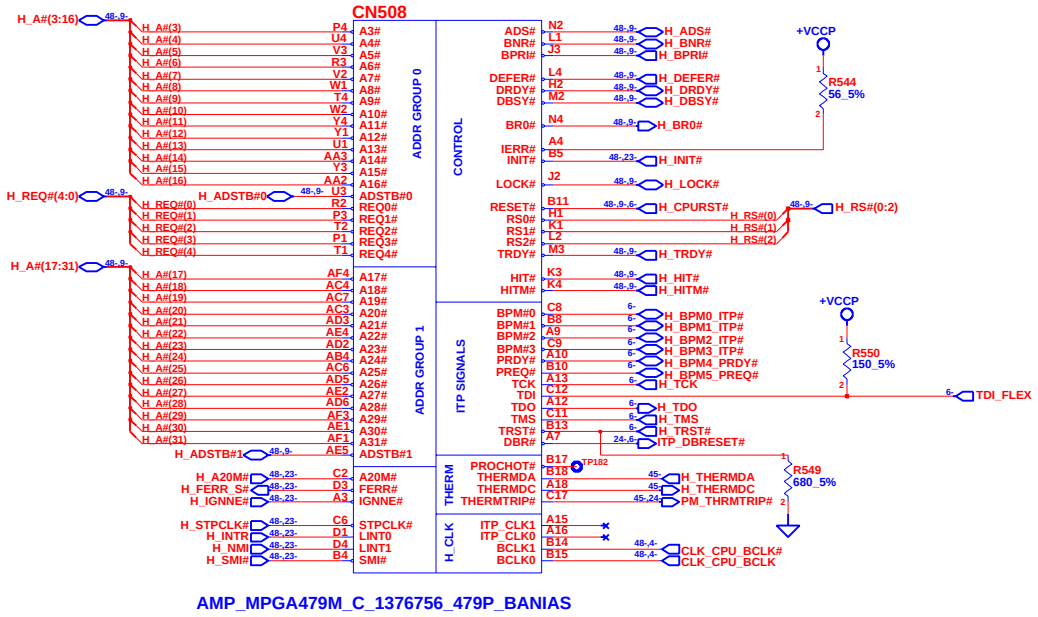

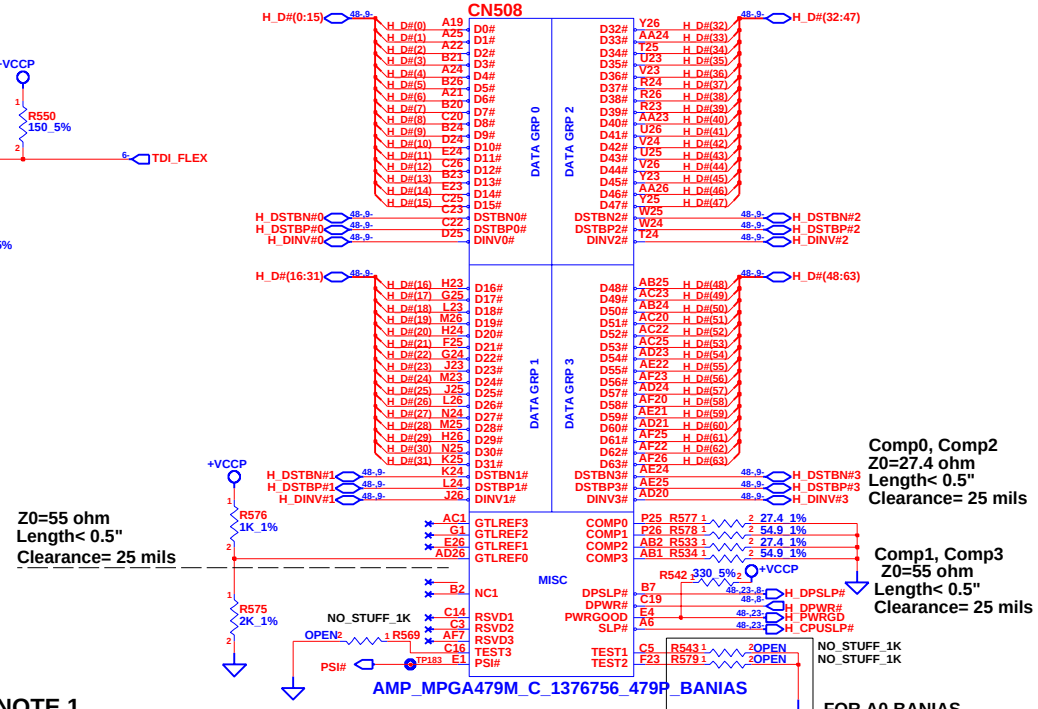

Comp0, Comp2
Z0=27.4 ohm
Length< 0.5"
Clearance= 25 mils

Comp1, Comp3
Z0=55 ohm
Length< 0.5"
Clearance= 25 mils

Z0=55 ohm
Length< 0.5"
Clearance= 25 mils

BANIAS 1 OF 3

NOTE 1

IF USE A0 STEPPING CPU MUST SET TEST1 & TEST2 TO 1K ohm PULL DOWN

QDF	STEPPING	FREQUENCY
QMI4	A0	1.2G
QMK4	A0	1.2G
QSU4	A1	1.3G
QSU5	A1	1.2G
QSU6	A1	1.3G
QSU7	A1	1.2G

NOTE 1

FOR A0 BANIAS
R543,R579 SHOULD BE 1K OHM

INVENTEC

TITLE Cricket 5.0
Banias(1/3)

SIZE	CODE	DOC. NUMBER	REV
A3	CS	QC5420	X01

CHANGE by RDEE3 9-Oct-2003 SHEET 5 OF 57

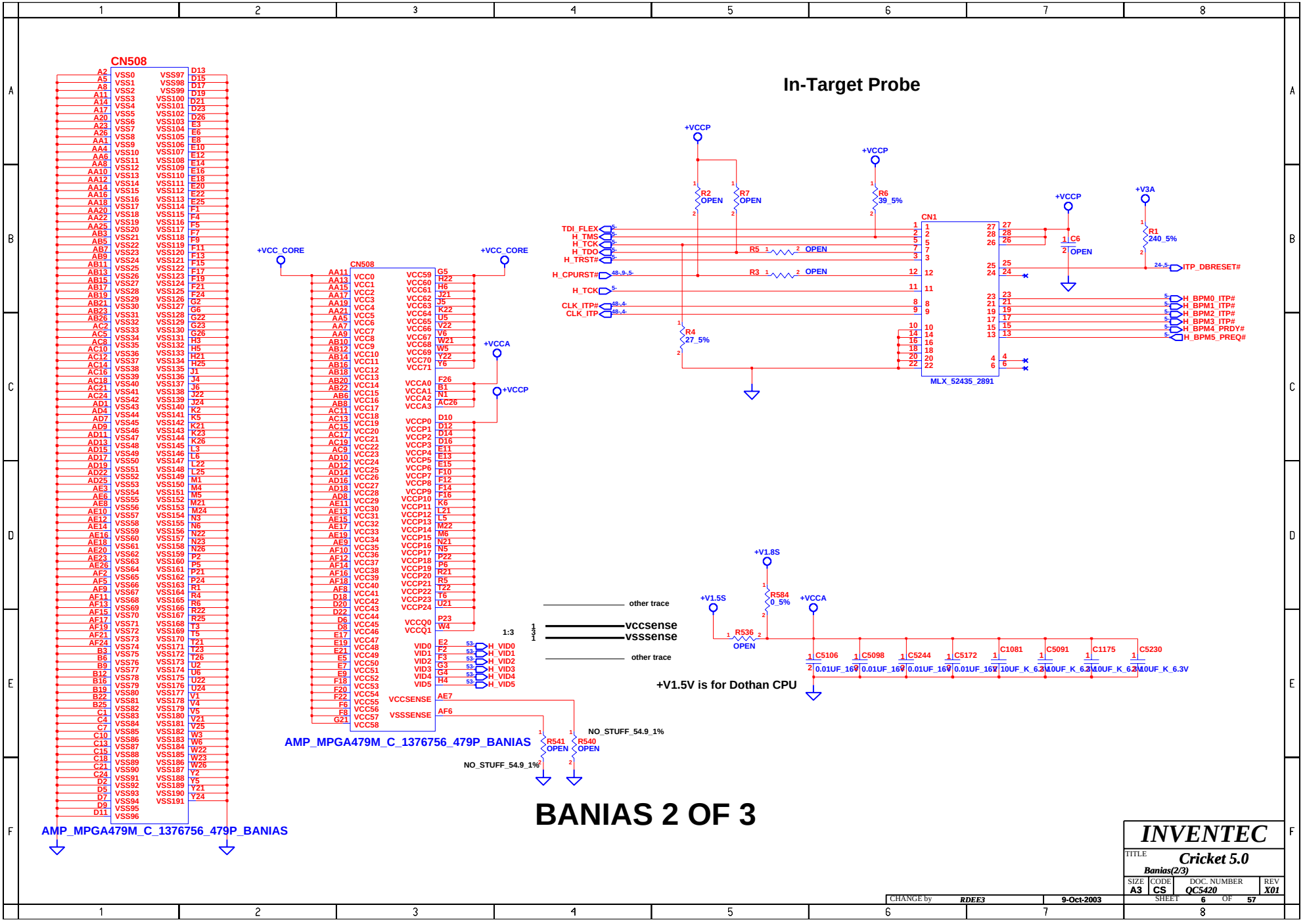
In-Target Probe
CN508
AMP_MPGA479M_C_1376756_479P_BANIAS
+VCC_CORE
+VCCP
+VCCA
+V3A
+V1.8S
+V1.5S
CN1
MLX_52435_2891
TDI_FLEX
H_TMS
H_TCK
H_TDO
H_TRST#
H_CPURST#
H_TCK
CLK_ITP#
CLK_ITP
ITP_DBRESET#
H_BPM0_ITP#
H_BPM1_ITP#
H_BPM2_ITP#
H_BPM3_ITP#
H_BPM4_PRDY#
H_BPM5_PREQ#
R2 OPEN
R7 OPEN
R6 39_5%
R5 OPEN
R3 OPEN
R4 27_5%
R1 240_5%
C6 OPEN
R584 0_5%
R536 OPEN
C5106 0.01UF_16V
C5098 0.01UF_16V
C5244 0.01UF_16V
C5172 0.01UF_16V
C1081 10UF_K_6.3V
C5091 10UF_K_6.3V
C1175 10UF_K_6.3V
C5230 10UF_K_6.3V
other trace
vccsense
vsssense
other trace
1:3
H_VID0
H_VID1
H_VID2
H_VID3
H_VID4
H_VID5
VCCSENSE
VSSSENSE
R541 OPEN
R540 OPEN
NO_STUFF_54.9_1%
NO_STUFF_54.9_1%
+V1.5V is for Dothan CPU
BANIAS 2 OF 3
INVENTEC
TITLE
Cricket 5.0
Banias(2/3)
SIZE A3
CODE CS
DOC. NUMBER QC5420
REV X01
SHEET 6 OF 57
CHANGE by RDEE3
9-Oct-2003

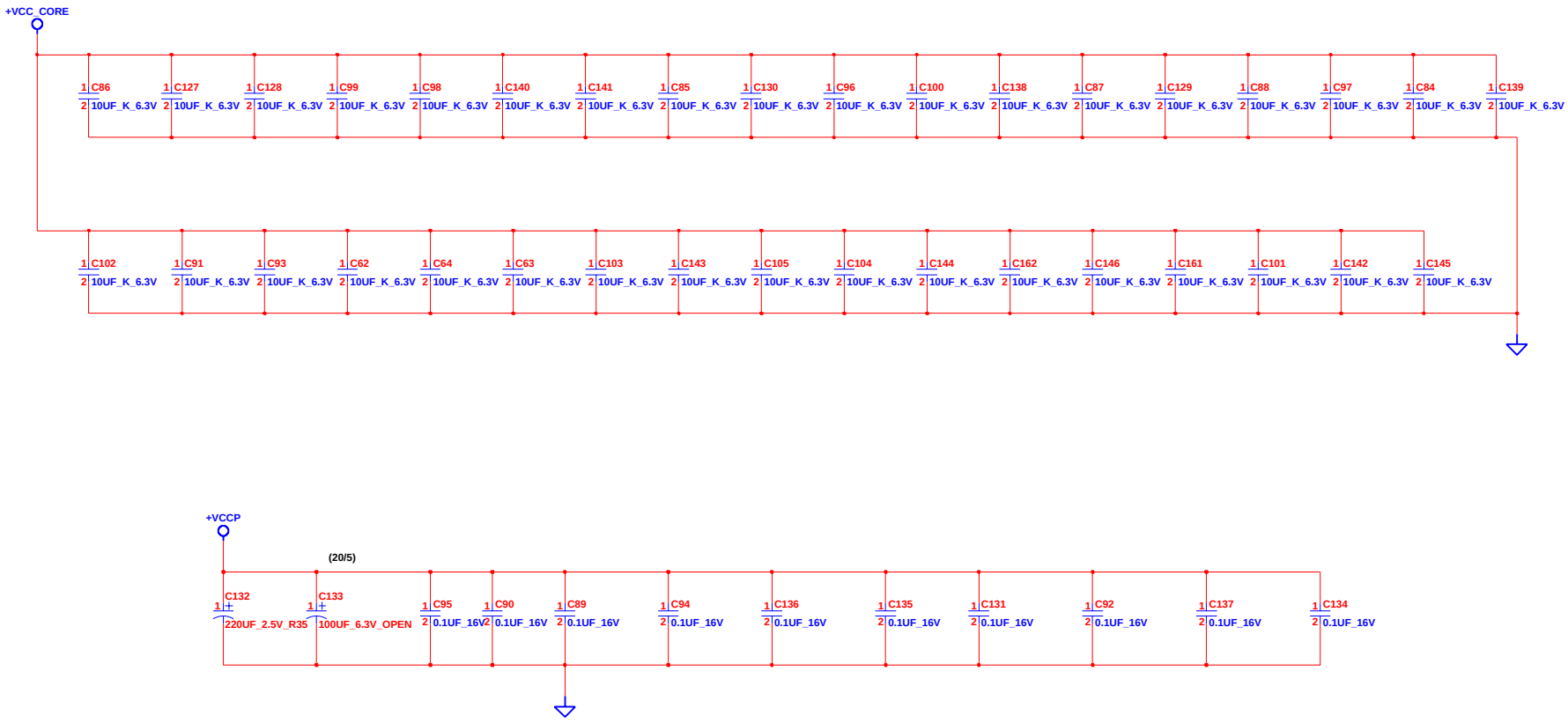

BANIAS 3 OF 3

CHANGE by	RDEE3	9-Oct-2003	

INVENTEC

TITLE *Cricket 5.0*
Banias(3/3)

SIZE	CODE	DOC. NUMBER	REV
A3	CS	QC5420	X01

SHEET 7 OF 57

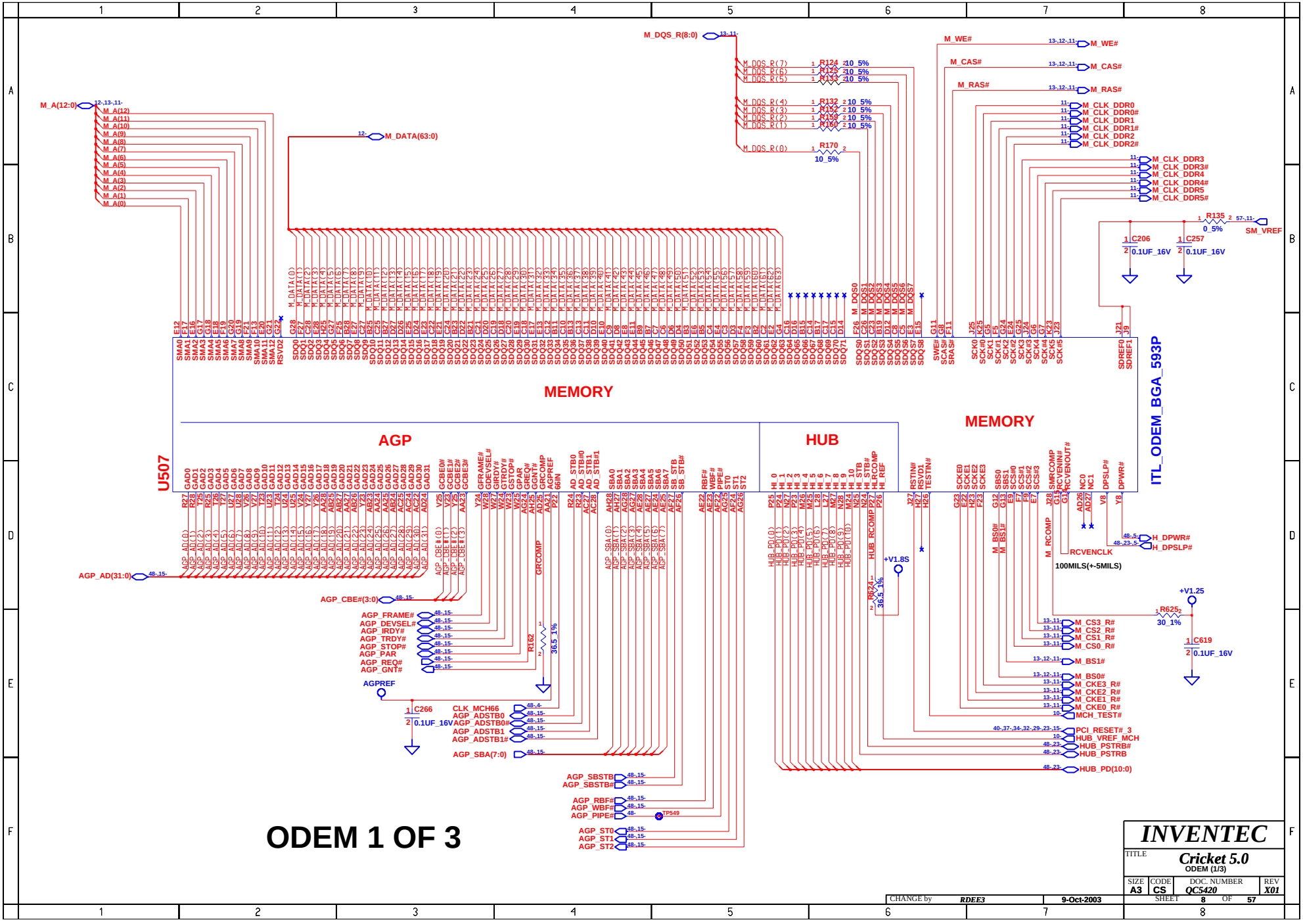

ODEM 1 OF 3

CHANGE by	RDEE3	9-Oct-2003	

INVENTEC

TITLE: Cricket 5.0
ODEM (1/3)

SIZE	CODE	DOC. NUMBER	REV
A3	CS	QC5420	X01

SHEET 8 OF 57

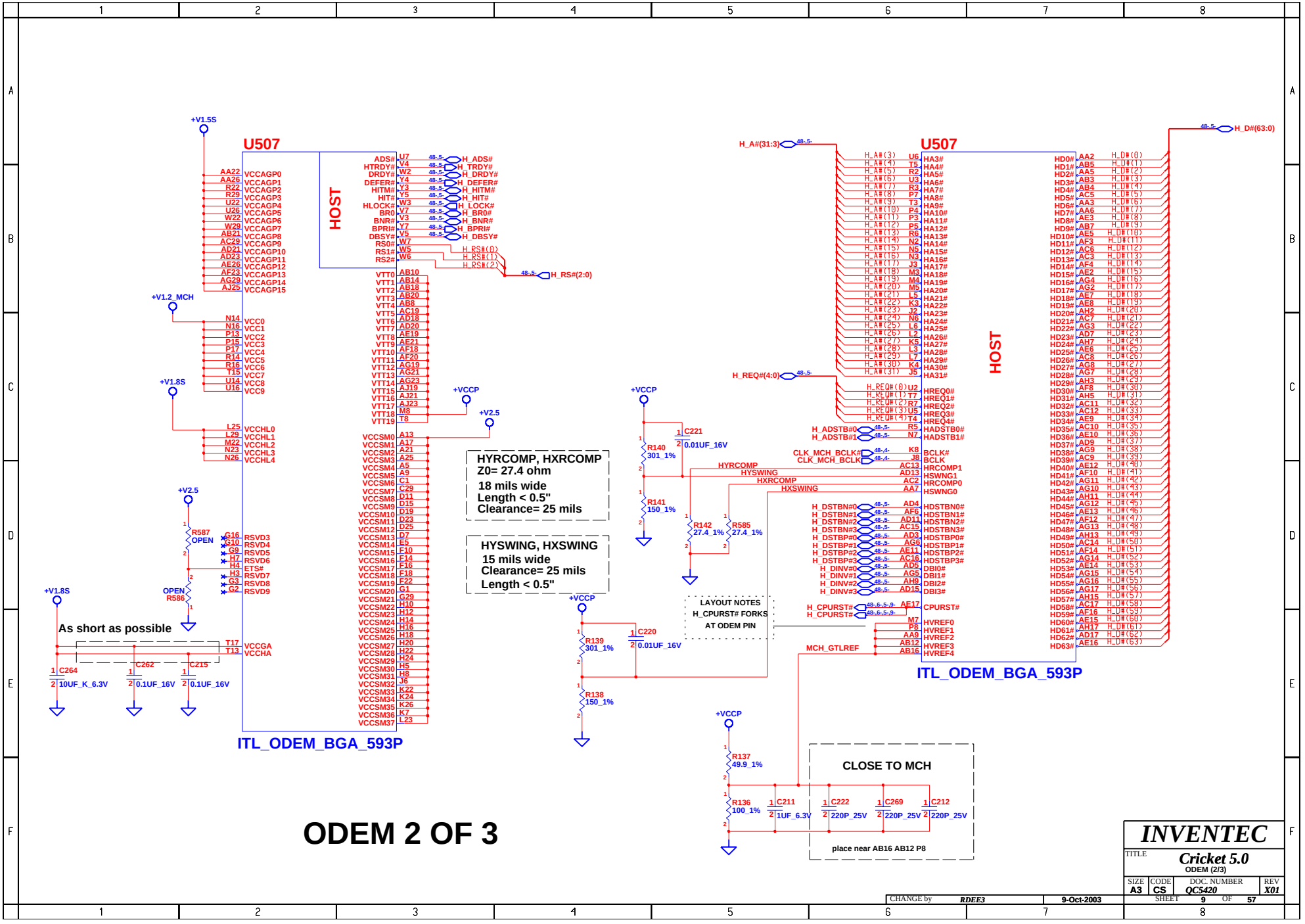

ODEM 2 OF 3

INVENTEC

TITLE: Cricket 5.0
ODEM (2/3)

SIZE	CODE	DOC. NUMBER	REV
A3	CS	QC5420	X01

SHEET 9 OF 57

CHANGE by RDEE3 9-Oct-2003

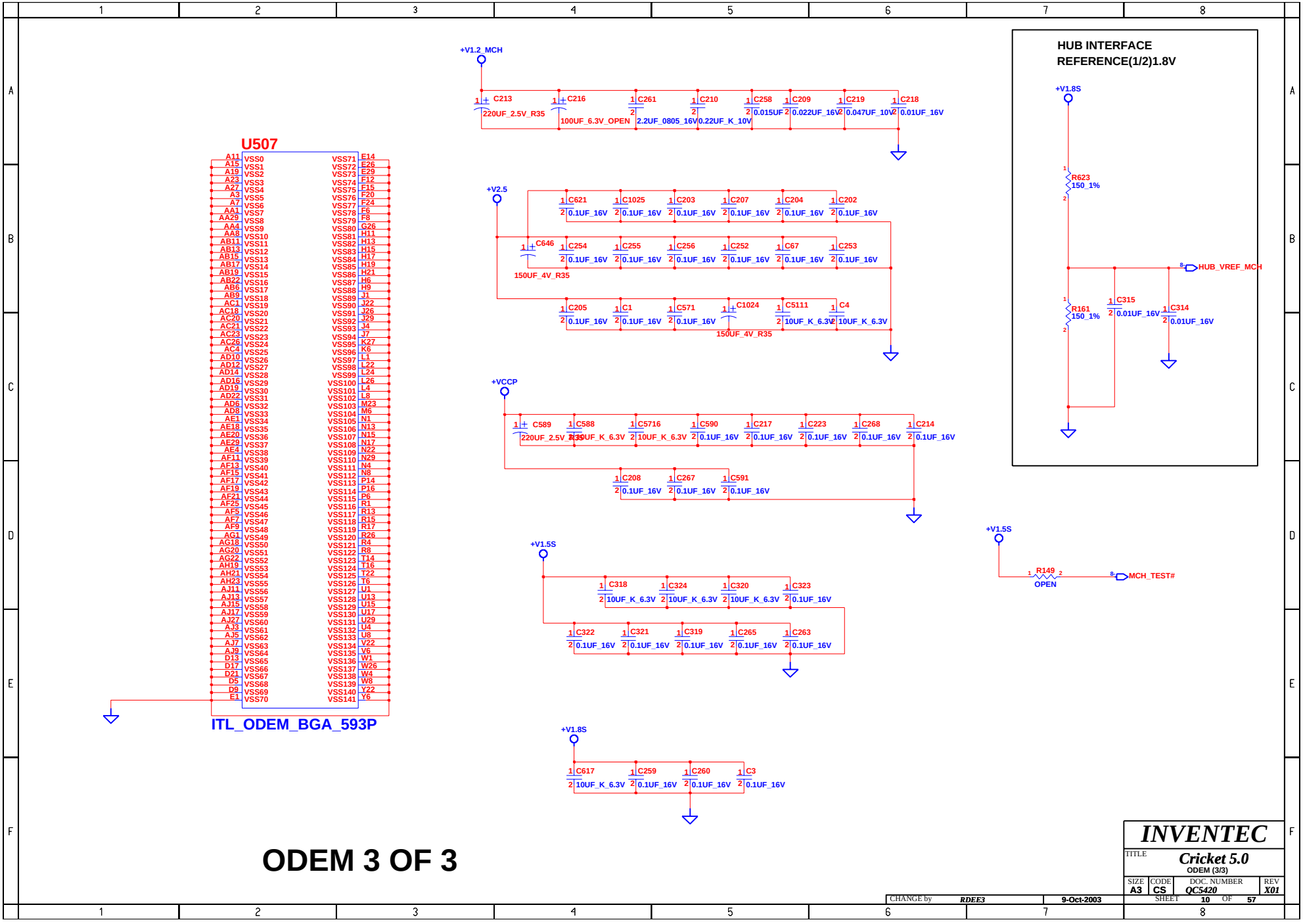
HUB INTERFACE
REFERENCE(1/2)1.8V
U507
ITL_ODEM_BGA_593P
+V1.2_MCH
C213 220UF_2.5V_R35
C216 100UF_6.3V_OPEN
C261 2.2UF_0805_16V
C210 0.22UF_K_10V
C258 0.015UF
C209 0.022UF_16V
C219 0.047UF_10V
C218 0.01UF_16V
+V2.5
C621 0.1UF_16V
C1025 0.1UF_16V
C203 0.1UF_16V
C207 0.1UF_16V
C204 0.1UF_16V
C202 0.1UF_16V
C646 150UF_4V_R35
C254 0.1UF_16V
C255 0.1UF_16V
C256 0.1UF_16V
C252 0.1UF_16V
C67 0.1UF_16V
C253 0.1UF_16V
C205 0.1UF_16V
C1 0.1UF_16V
C571 0.1UF_16V
C1024 150UF_4V_R35
C5111 10UF_K_6.3V
C4 10UF_K_6.3V
+VCCP
C589 220UF_2.5V
C588 10UF_K_6.3V
C5716 10UF_K_6.3V
C590 0.1UF_16V
C217 0.1UF_16V
C223 0.1UF_16V
C268 0.1UF_16V
C214 0.1UF_16V
C208 0.1UF_16V
C267 0.1UF_16V
C591 0.1UF_16V
+V1.5S
C318 10UF_K_6.3V
C324 10UF_K_6.3V
C320 10UF_K_6.3V
C323 0.1UF_16V
C322 0.1UF_16V
C321 0.1UF_16V
C319 0.1UF_16V
C265 0.1UF_16V
C263 0.1UF_16V
+V1.8S
C617 10UF_K_6.3V
C259 0.1UF_16V
C260 0.1UF_16V
C3 0.1UF_16V
+V1.8S
R623 150_1%
HUB_VREF_MCH
R161 150_1%
C315 0.01UF_16V
C314 0.01UF_16V
+V1.5S
R149 OPEN
MCH_TEST#
ODEM 3 OF 3
INVENTEC
TITLE
Cricket 5.0
ODEM (3/3)
SIZE A3
CODE CS
DOC. NUMBER QC5420
REV X01
SHEET 10 OF 57
CHANGE by RDEE3
9-Oct-2003

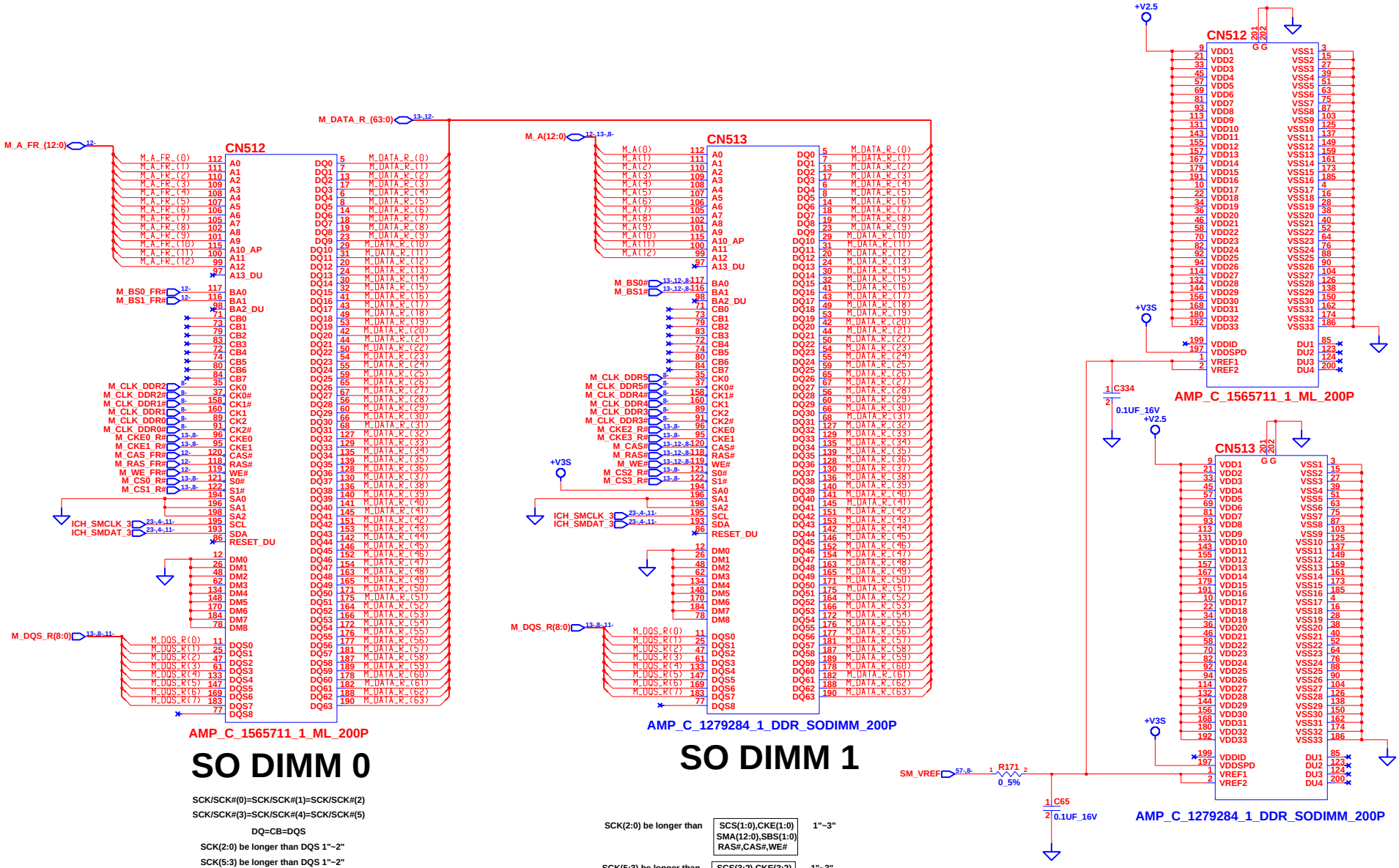

SCK/SCK#(0)=SCK/SCK#(1)=SCK/SCK#(2)

SCK/SCK#(3)=SCK/SCK#(4)=SCK/SCK#(5)

DQ=CB=DQS

SCK(2:0) be longer than DQS 1"~2"

SCK(5:3) be longer than DQS 1"~2"

SDQ(63:0) from MCH to DIMM0 2"~3.5"

SCS#,SCKE from MCH to DIMM0 2"~4.5"

SMA(12:0),SBS(1:0),SRAS#,SCAS#,SWE# 2"~3.5"

SCK 3"~6.5"

CHANGE by	RDEE3	9-Oct-2003	

INVENTEC

TITLE: Cricket 5.0
DDR (1/4)

SIZE	CODE	DOC. NUMBER	REV
A3	CS	QC5420	X01

SHEET 11 OF 57

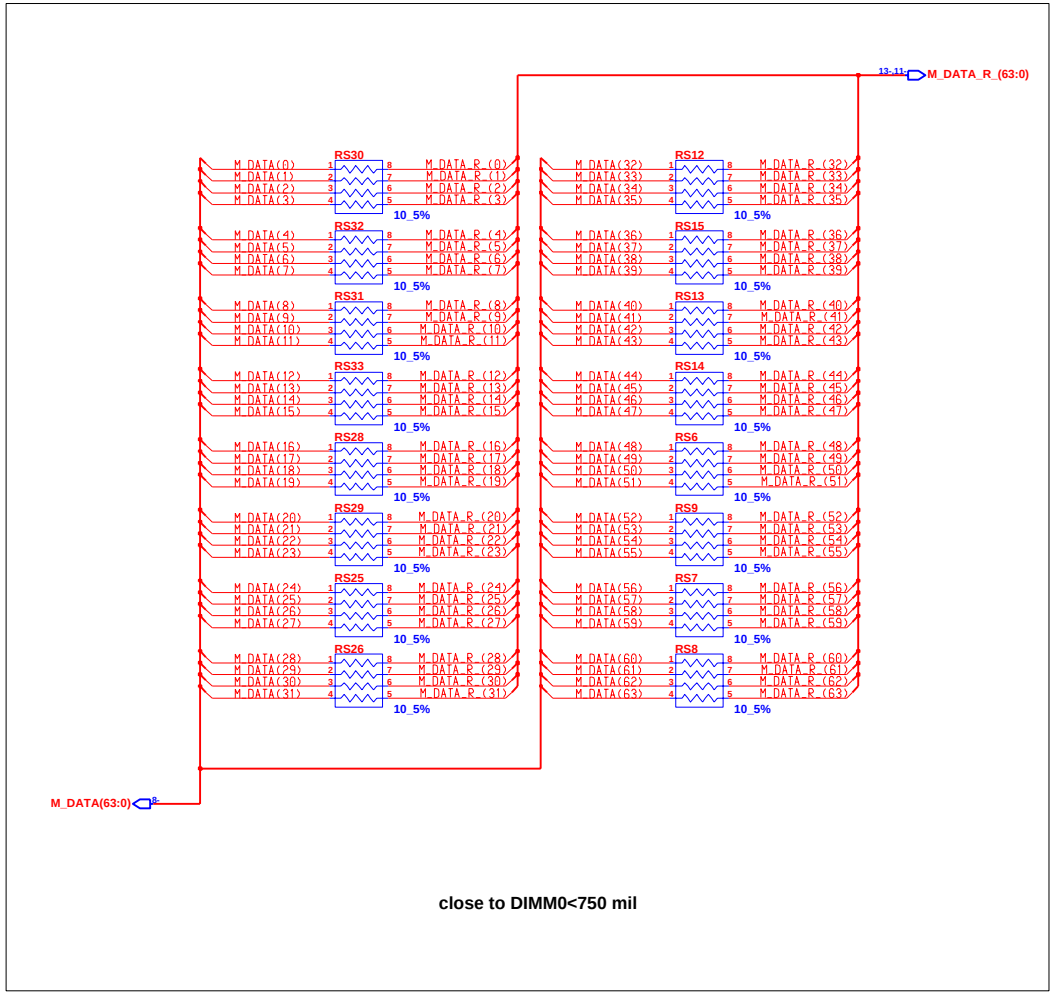

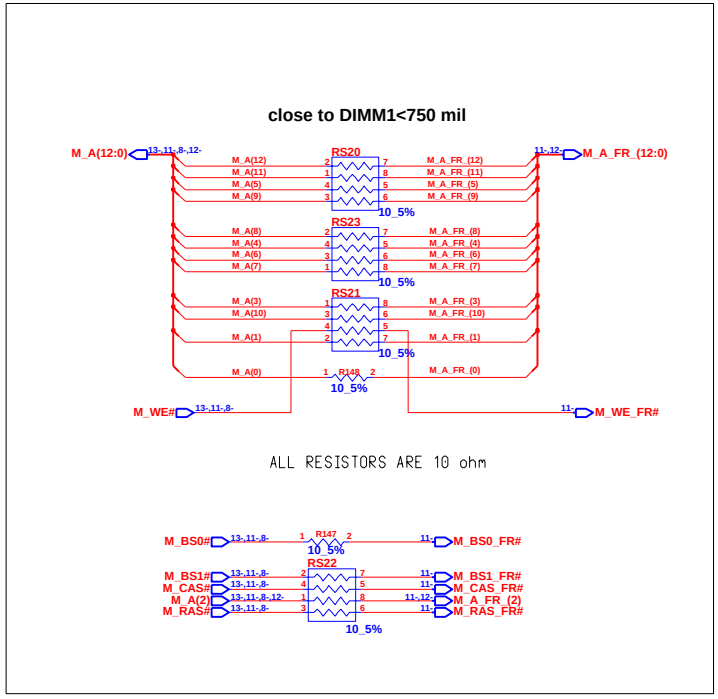

CHANGE by	RDEE3	9-Oct-2003	

INVENTEC

TITLE **Cricket 5.0**
DDR (2/4)

SIZE	CODE	DOC. NUMBER	REV
A3	CS	QC5420	X01

SHEET 12 OF 57

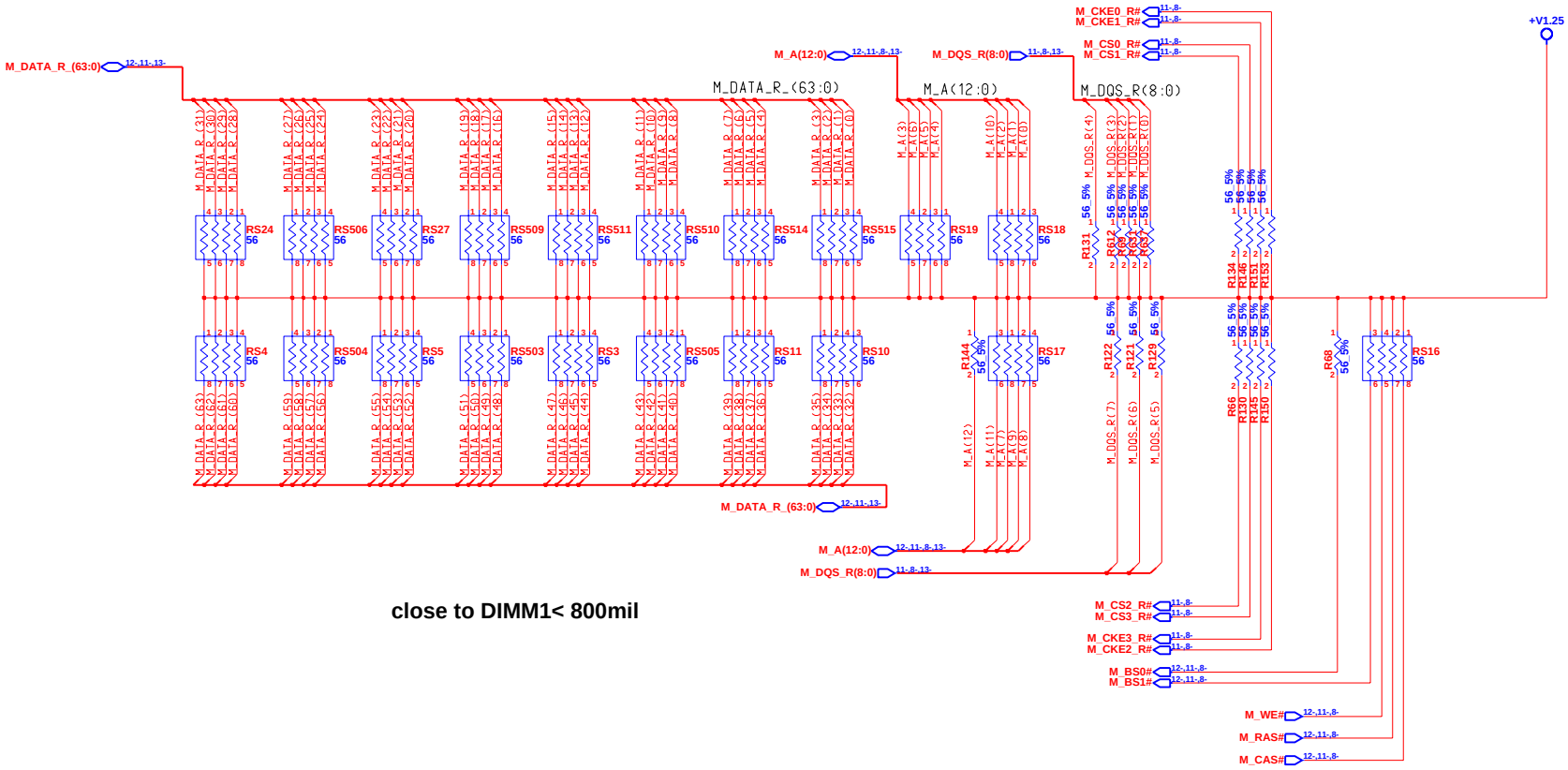

close to DIMM1< 800mil

CHANGE by	RDEE3	9-Oct-2003	

INVENTEC

TITLE **Cricket 5.0**
DDR (3/4)

SIZE	CODE	DOC. NUMBER	REV
A3	CS	QC5420	X01

SHEET 13 OF 57

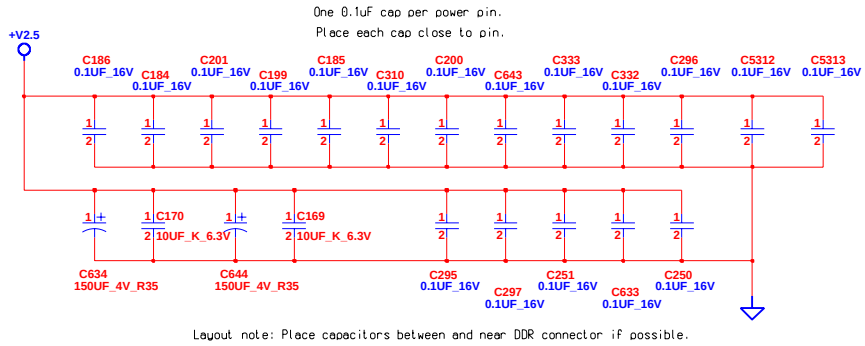

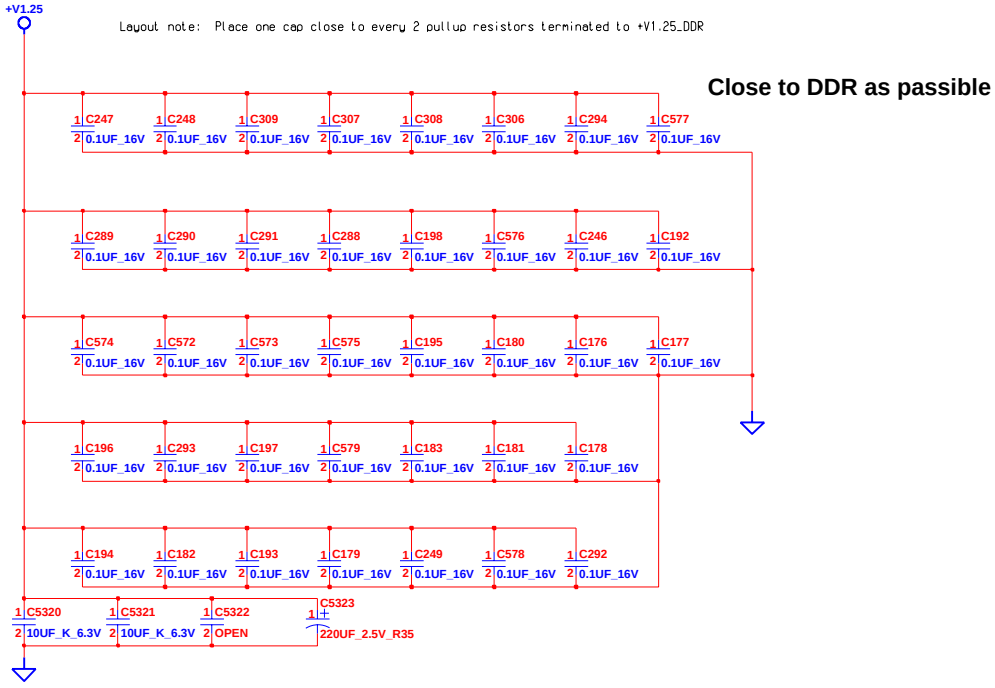

CHANGE by	RDEE3	9-Oct-2003	

INVENTEC

TITLE **Cricket 5.0**
DDR(4/4)

SIZE	CODE	DOC. NUMBER	REV
A3	CS	QC5420	X01

SHEET 14 OF 57

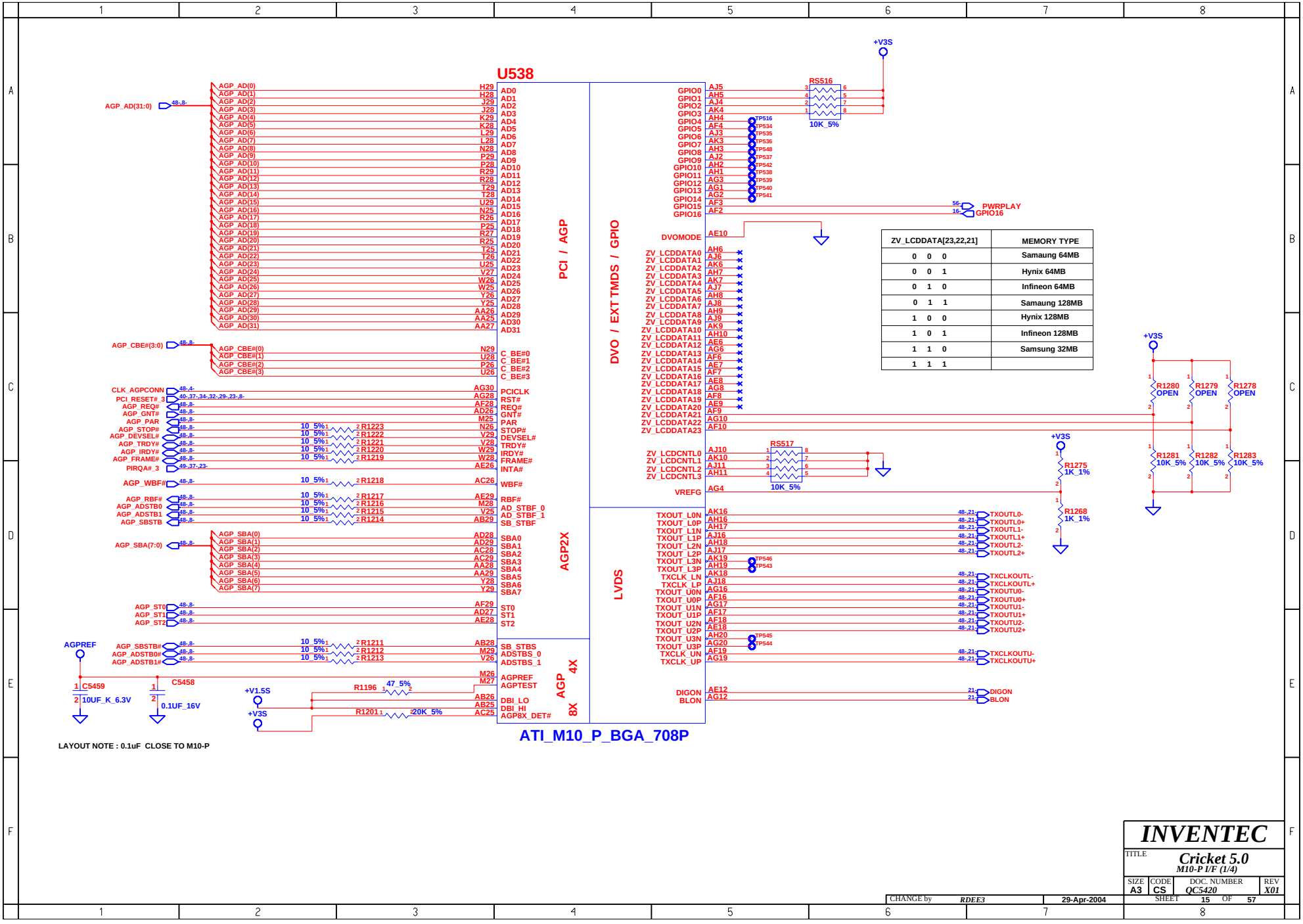

ZV_LCDDATA[23,22,21]	MEMORY TYPE
0 0 0	Samaung 64MB
0 0 1	Hynix 64MB
0 1 0	Infineon 64MB
0 1 1	Samaung 128MB
1 0 0	Hynix 128MB
1 0 1	Infineon 128MB
1 1 0	Samsung 32MB
1 1 1	

LAYOUT NOTE : 0.1uF CLOSE TO M10-P

CHANGE by	RDEE3	29-Apr-2004	

INVENTEC

TITLE: *Cricket 5.0*
M10-P I/F (1/4)

SIZE	CODE	DOC. NUMBER	REV
A3	CS	QC5420	X01

SHEET 15 OF 57

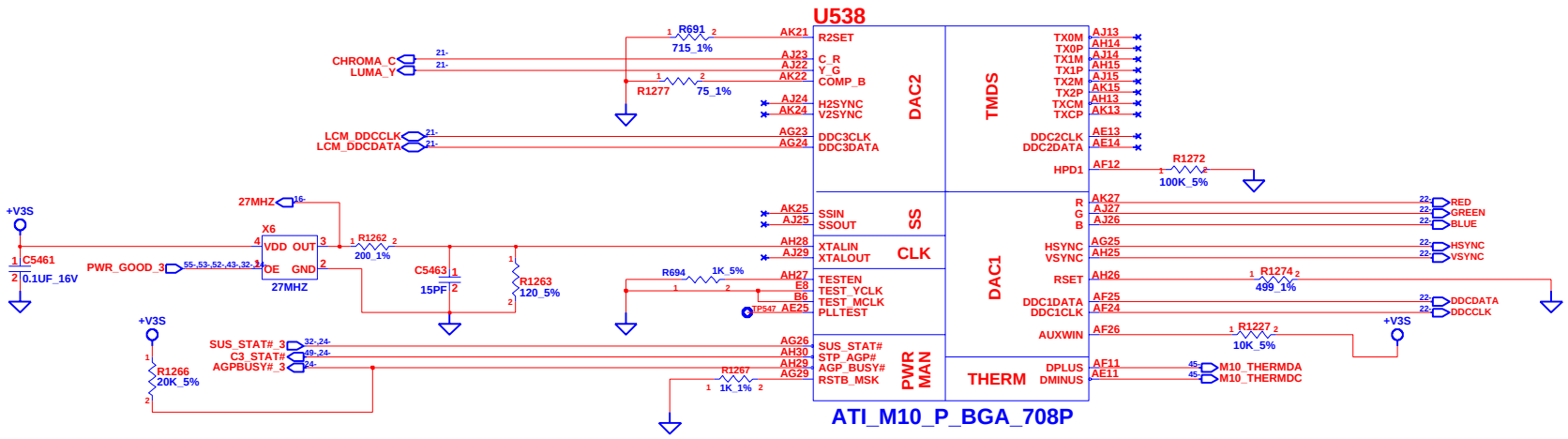

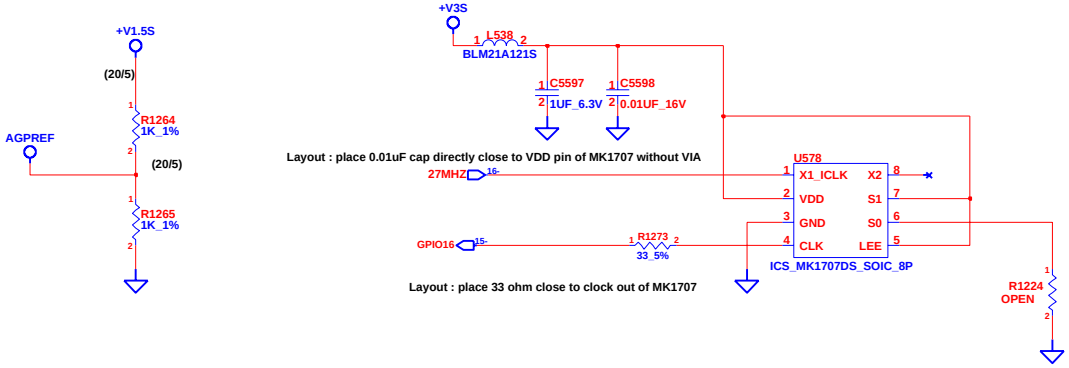

INVENTEC

TITLE Cricket 5.0
M10-P DDR I/F (2/4)

SIZE	CODE	DOC. NUMBER	REV
A3	CS	QC5420	X01

CHANGE by RDEE3 29-Apr-2004

SHEET 16 OF 57

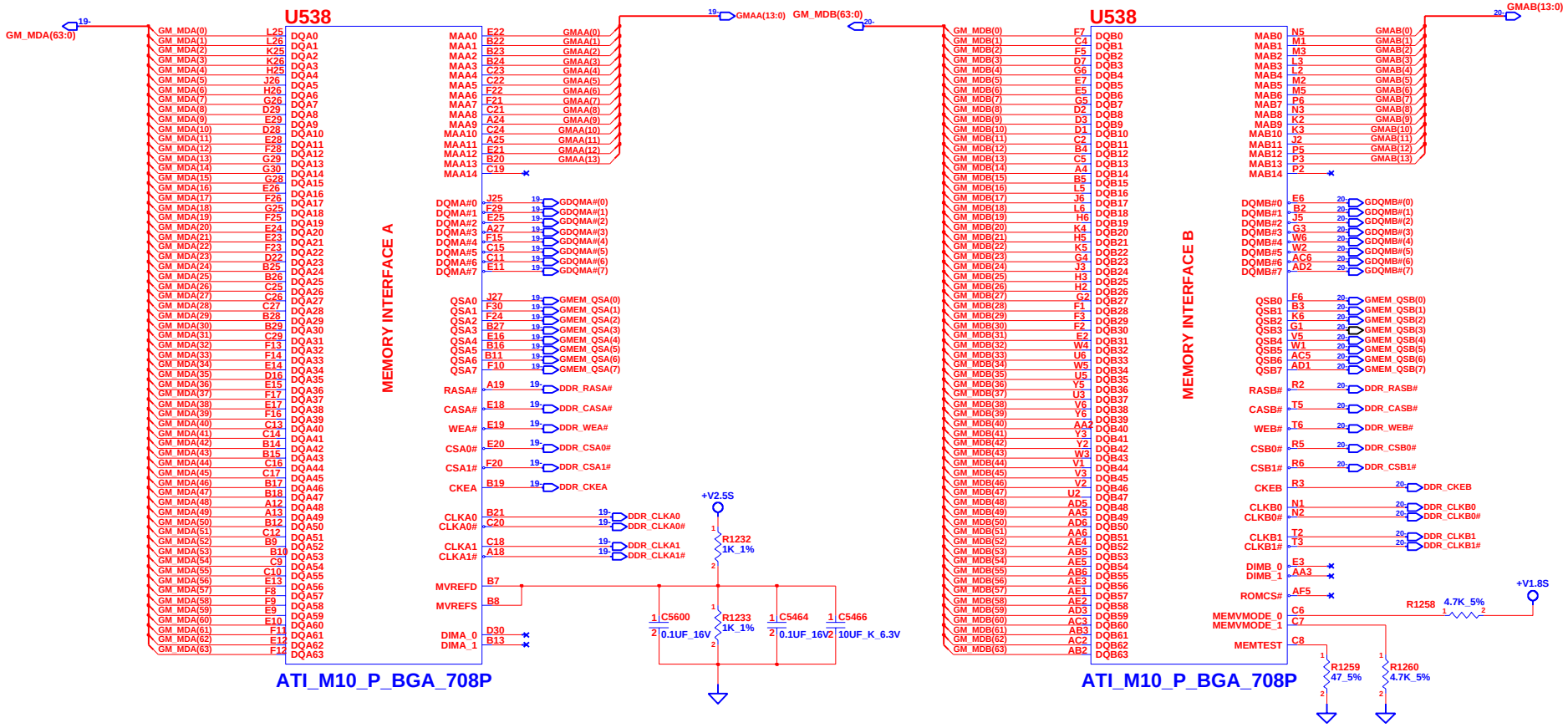

FOR 2.5V VDDR1: MEMVMOVE0=1.8V
MEMVMOVE1=GND

FOR 1.8V VDDR1: MEMVMOVE0=GND
(ELPIDA) MEMVMOVE1=1.8V

DIMA_0,DIMA_1, DIMB_0,DIMB_1 SIGNALS
ONLY NEEDED FOR ELPIDA MEMORIES

INVENTEC			
TITLE	Cricket 5.0 M10-P POWER & GND		
SIZE A3	CODE CS	DOC. NUMBER QC5420	REV X01
CHANGE by RDEE3	29-Apr-2004	SHEET 17 OF 57	

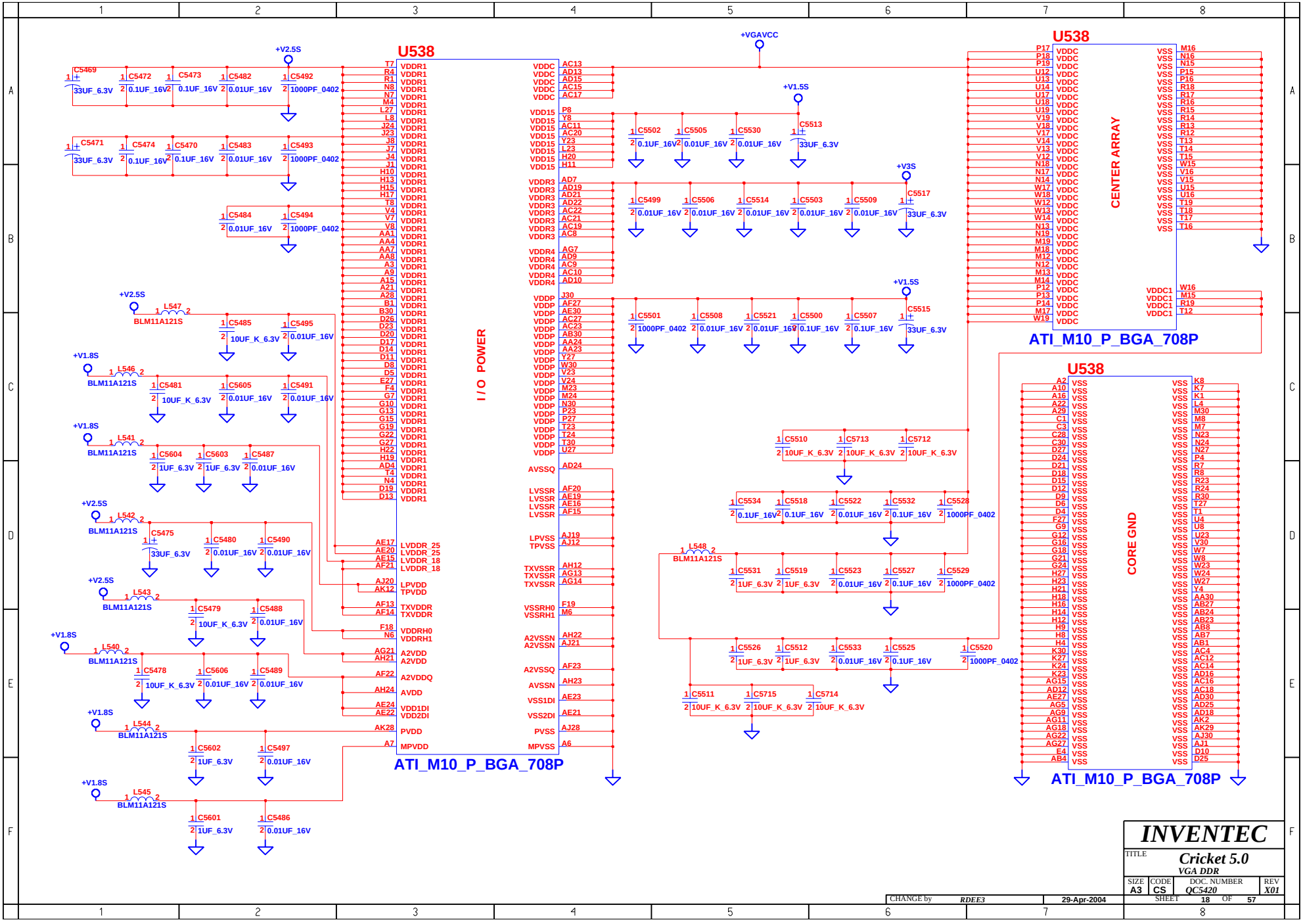
U538
I / O POWER
ATI_M10_P_BGA_708P
CENTER ARRAY
CORE GND
+V2.5S
+V1.5S
+V3S
+VGAVCC
+V1.8S
BLM11A121S
INVENTEC
TITLE
Cricket 5.0
VGA DDR
SIZE A3
CODE CS
DOC. NUMBER QC5420
REV X01
SHEET 18 OF 57
CHANGE by RDEE3
29-Apr-2004

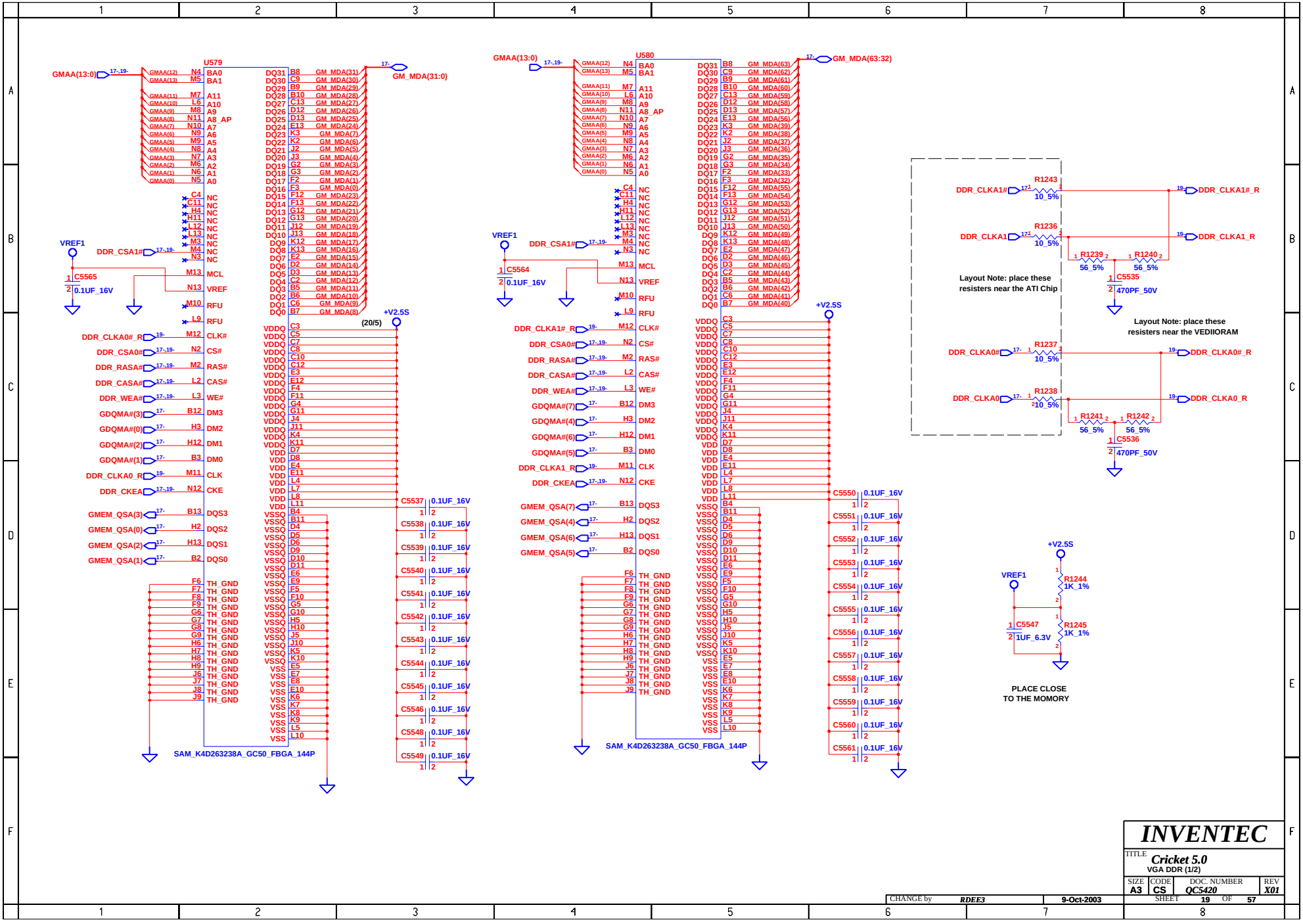
U579
U580
GMAA(13:0)
GM_MDA(31:0)
GM_MDA(63:32)
VREF1
DDR_CSA1#
C5565
0.1UF_16V
C5564
+V2.5S
(20/5)
DDR_CLKA0#_R
DDR_CSA0#
DDR_RASA#
DDR_CASA#
DDR_WEA#
GDQMA#(3)
GDQMA#(0)
GDQMA#(2)
GDQMA#(1)
DDR_CLKA0_R
DDR_CKEA
GMEM_QSA(3)
GMEM_QSA(0)
GMEM_QSA(2)
GMEM_QSA(1)
DDR_CLKA1#_R
GDQMA#(7)
GDQMA#(4)
GDQMA#(6)
GDQMA#(5)
DDR_CLKA1_R
GMEM_QSA(7)
GMEM_QSA(4)
GMEM_QSA(6)
GMEM_QSA(5)
SAM_K4D263238A_GC50_FBGA_144P
DDR_CLKA1#
DDR_CLKA1
DDR_CLKA0#
DDR_CLKA0
R1243
R1236
R1237
R1238
10_5%
R1239
R1240
R1241
R1242
56_5%
C5535
C5536
470PF_50V
DDR_CLKA1#_R
DDR_CLKA1_R
DDR_CLKA0#_R
DDR_CLKA0_R
Layout Note: place these resisters near the ATI Chip
Layout Note: place these resisters near the VEDIIORAM
R1244
R1245
1K_1%
C5547
1UF_6.3V
PLACE CLOSE TO THE MOMORY
INVENTEC
TITLE
Cricket 5.0
VGA DDR (1/2)
SIZE A3
CODE CS
DOC. NUMBER QC5420
REV X01
SHEET 19 OF 57
CHANGE by RDEE3
9-Oct-2003

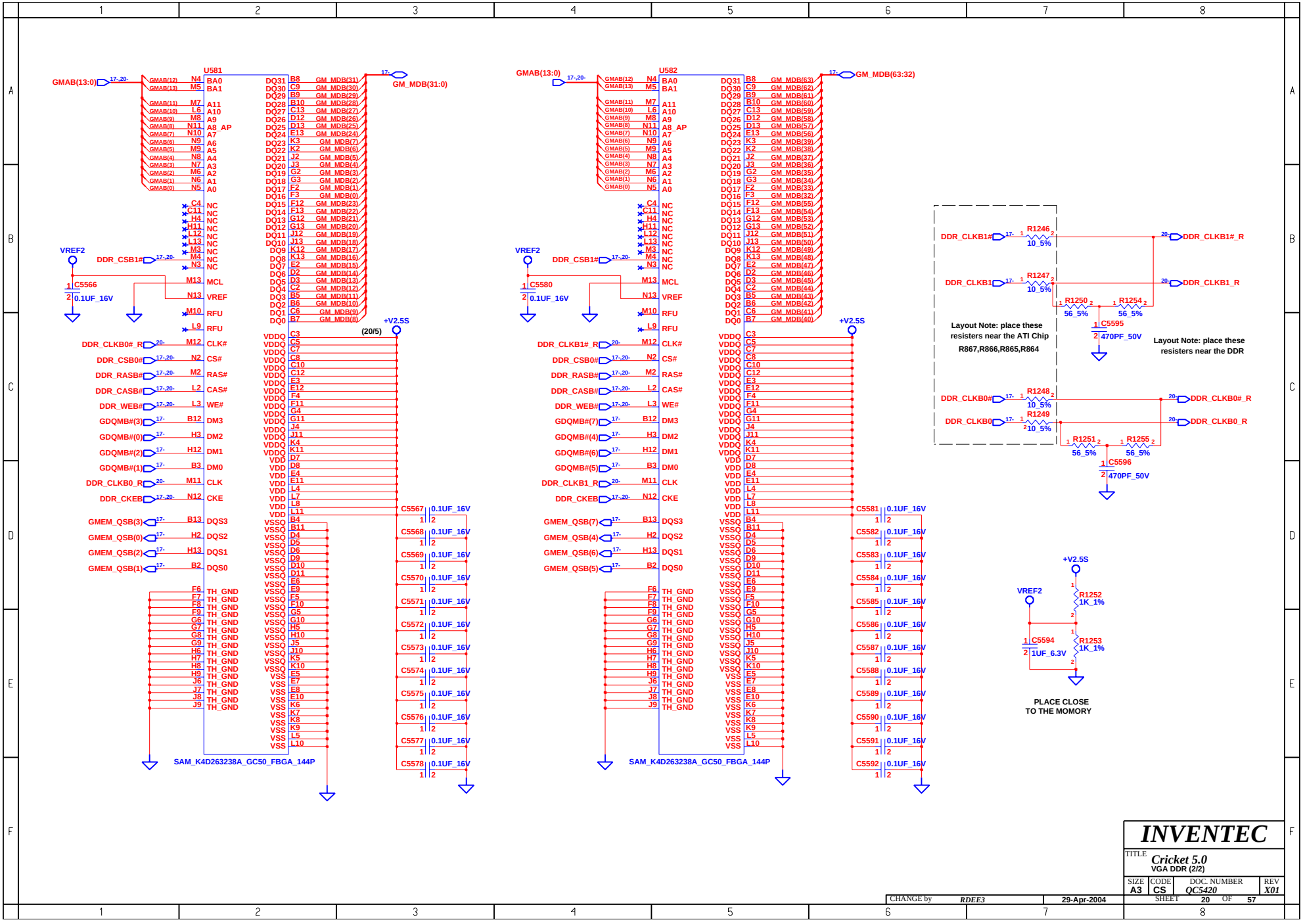
U581
U582
GMAB(13:0)
GM_MDB(31:0)
GM_MDB(63:32)
VREF2
DDR_CSB1#
C5566
C5580
0.1UF_16V
+V2.5S
(20/5)
DDR_CLKB0#_R
DDR_CSB0#
DDR_RASB#
DDR_CASB#
DDR_WEB#
GDQMB#(3)
GDQMB#(0)
GDQMB#(2)
GDQMB#(1)
DDR_CLKB0_R
DDR_CKEB
GMEM_QSB(3)
GMEM_QSB(0)
GMEM_QSB(2)
GMEM_QSB(1)
DDR_CLKB1#_R
GDQMB#(7)
GDQMB#(4)
GDQMB#(6)
GDQMB#(5)
DDR_CLKB1_R
GMEM_QSB(7)
GMEM_QSB(4)
GMEM_QSB(6)
GMEM_QSB(5)
SAM_K4D263238A_GC50_FBGA_144P
DDR_CLKB1#
DDR_CLKB1
DDR_CLKB1#_R
DDR_CLKB1_R
R1246 10_5%
R1247 10_5%
R1250 56_5%
R1254 56_5%
C5595 470PF_50V
Layout Note: place these resisters near the ATI Chip
R867,R866,R865,R864
Layout Note: place these resisters near the DDR
DDR_CLKB0#
DDR_CLKB0
DDR_CLKB0#_R
DDR_CLKB0_R
R1248 10_5%
R1249 10_5%
R1251 56_5%
R1255 56_5%
C5596 470PF_50V
R1252 1K_1%
R1253 1K_1%
C5594 1UF_6.3V
PLACE CLOSE TO THE MOMORY
INVENTEC
TITLE
Cricket 5.0
VGA DDR (2/2)
SIZE A3
CODE CS
DOC. NUMBER QC5420
REV X01
SHEET 20 OF 57
CHANGE by RDEE3
29-Apr-2004

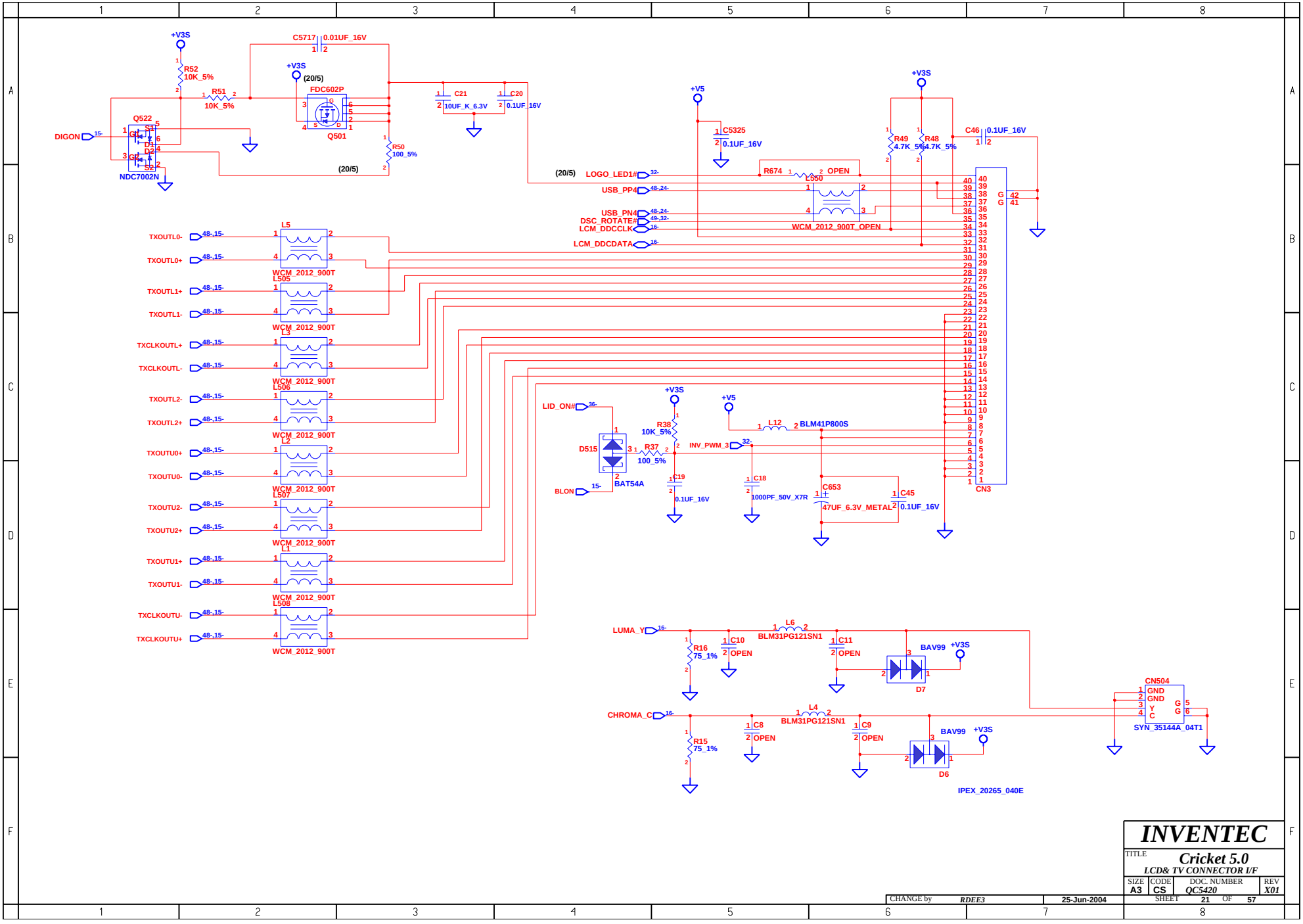

INVENTEC

TITLE **Cricket 5.0**

LCD& TV CONNECTOR I/F

SIZE	CODE	DOC. NUMBER	REV
A3	CS	QC5420	X01

CHANGE by RDEE3 25-Jun-2004

SHEET 21 OF 57

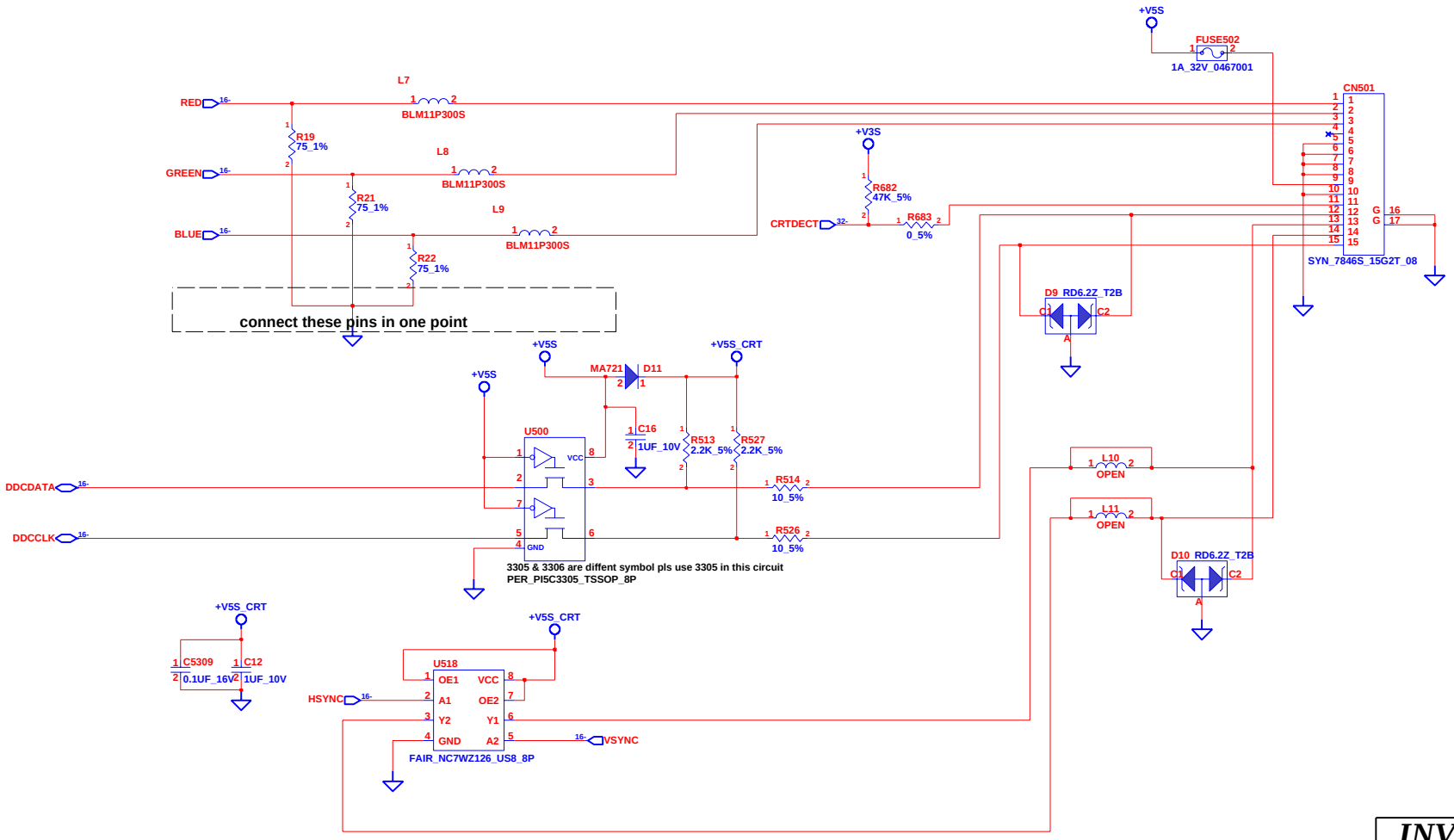

CHANGE by	RDEE3	29-Apr-2004	

INVENTEC

TITLE **Cricket 5.0**

CRT INTERFACE

SIZE	CODE	DOC. NUMBER	REV
A3	CS	QC5420	X01

SHEET 22 OF 57

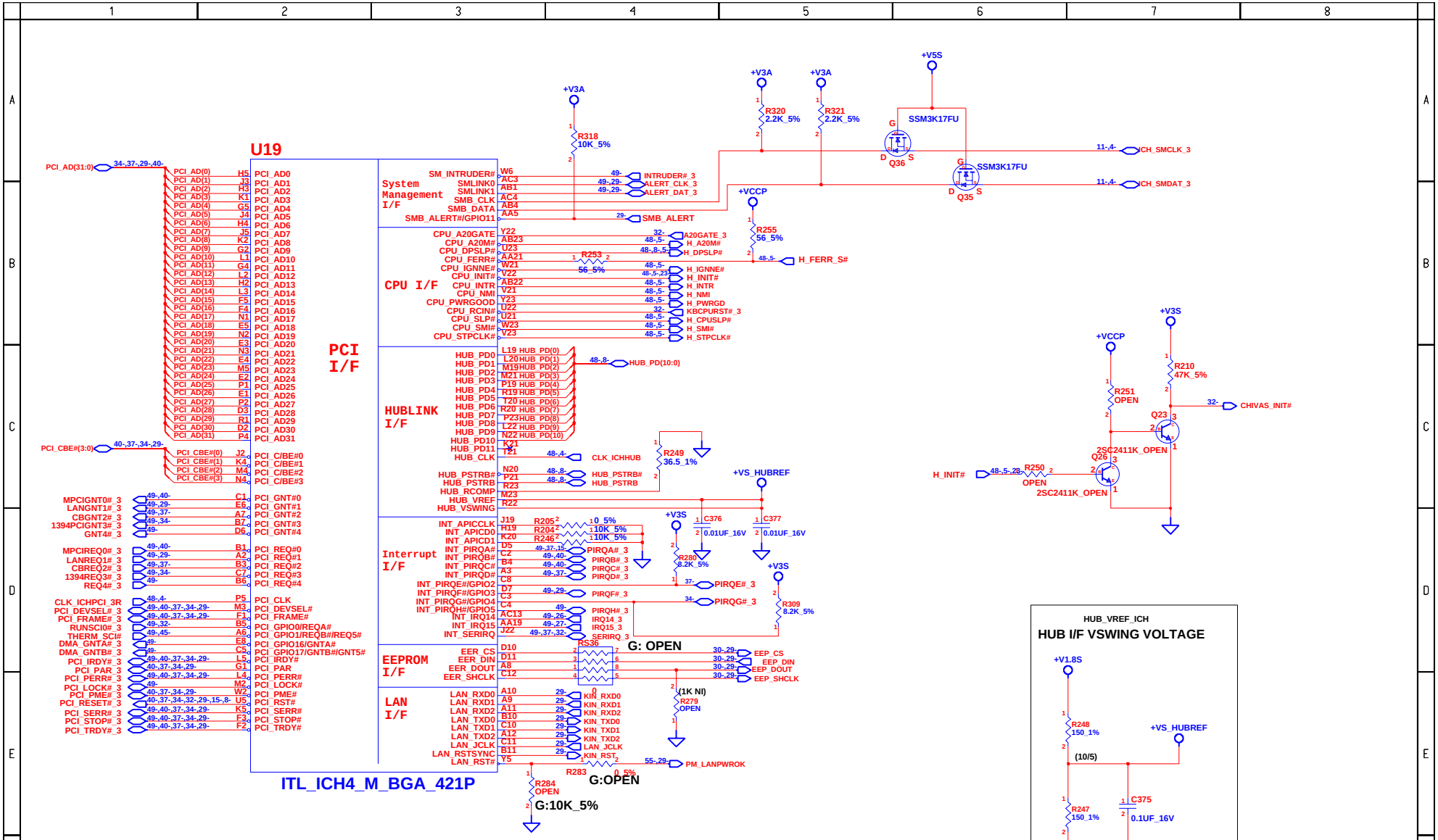

REQ0/GNT0	REQ1/GNT1	REQ2/GNT2	REQ3/GNT3	REQ4/GMT4
MINI-PCI	LAN	CARDBUS	1394	X

IRQA	IRQB	IRQC	IRQD	IRQE	IRQF	IRQG
ATI CARDBUS	MINI-PCI	MINI-PCI	CARDBUS	CARDBUS	LAN	1394

INVENTEC

TITLE Cricket 5.0

ICH4 (1/3)

SIZE	CODE	DOC. NUMBER	REV
A3	CS	QC5420	X01

CHANGE by RDEE3 9-Oct-2003

SHEET 23 OF 57

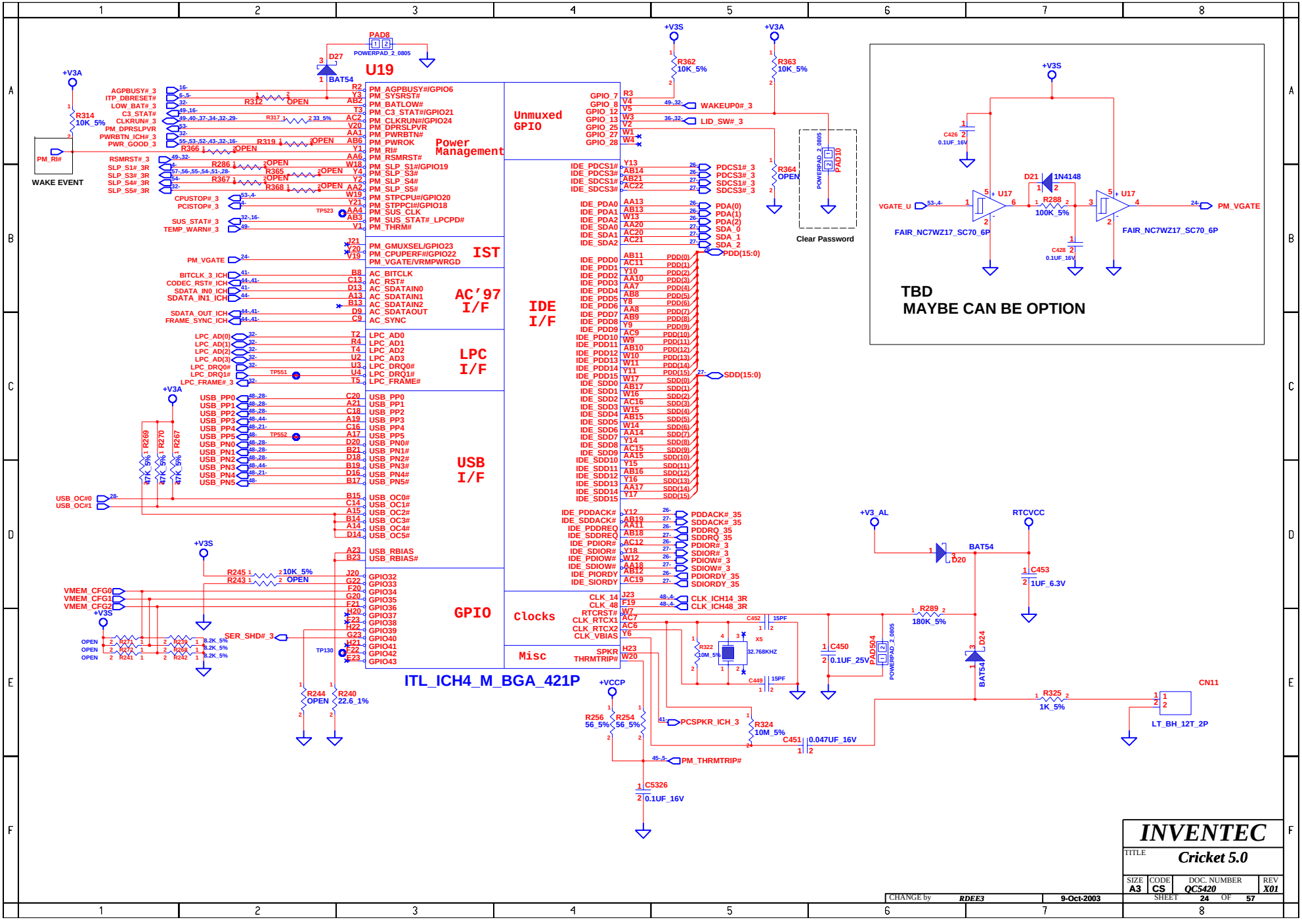
U19
ITL_ICH4_M_BGA_421P
Power Management
Unmuxed GPIO
IST
AC'97 I/F
LPC I/F
USB I/F
GPIO
IDE I/F
Clocks
Misc
WAKE EVENT
Clear Password
TBD
MAYBE CAN BE OPTION
FAIR_NC7WZ17_SC70_6P
INVENTEC
Cricket 5.0
DOC. NUMBER QC5420
REV X01
SIZE A3
CODE CS
SHEET 24 OF 57
CHANGE by RDEE3
9-Oct-2003

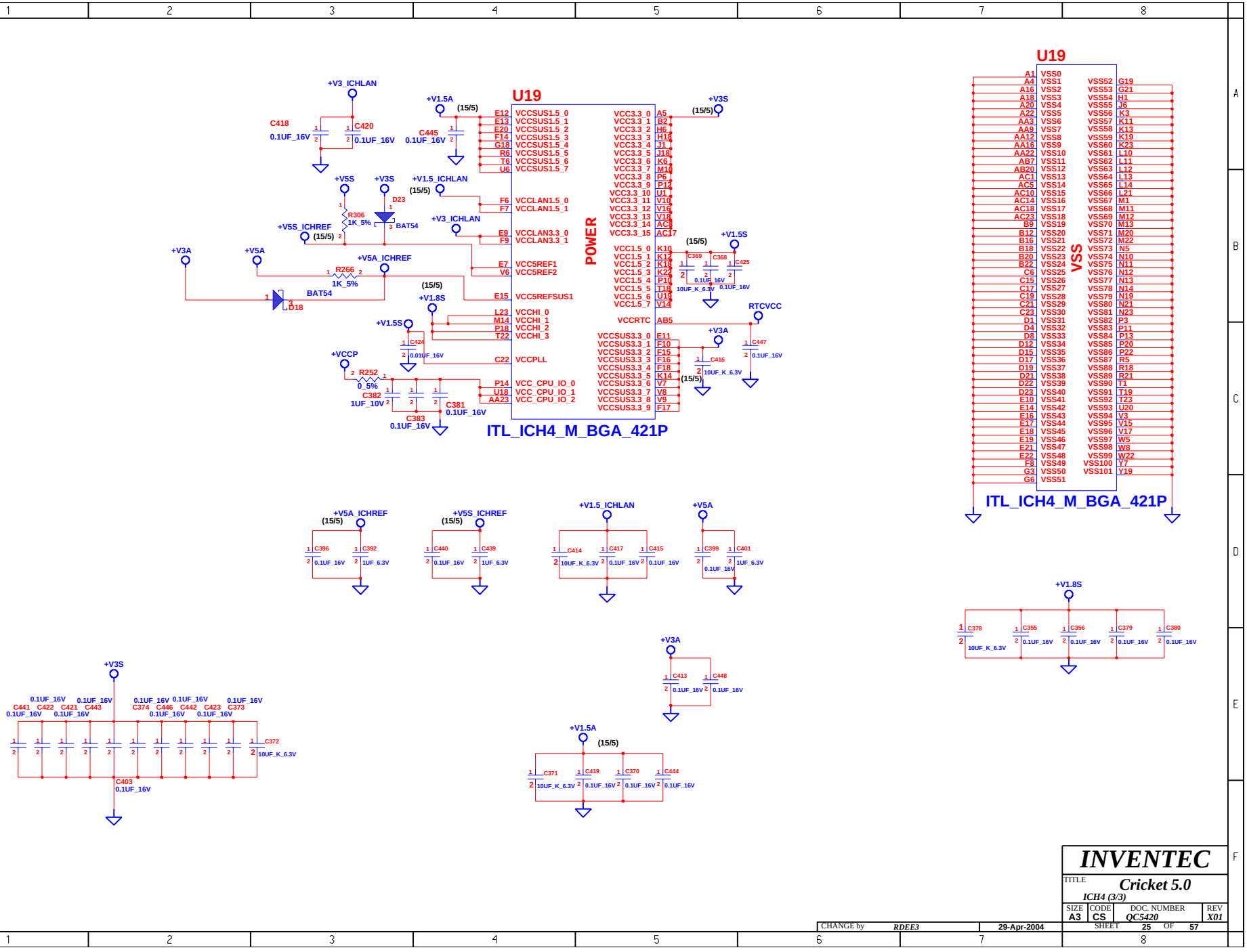

INVENTEC

TITLE Cricket 5.0

ICH4 (3/3)

SIZE	CODE	DOC. NUMBER	REV
A3	CS	QC5420	X01

CHANGE by RDEE3 29-Apr-2004

SHEET 25 OF 57

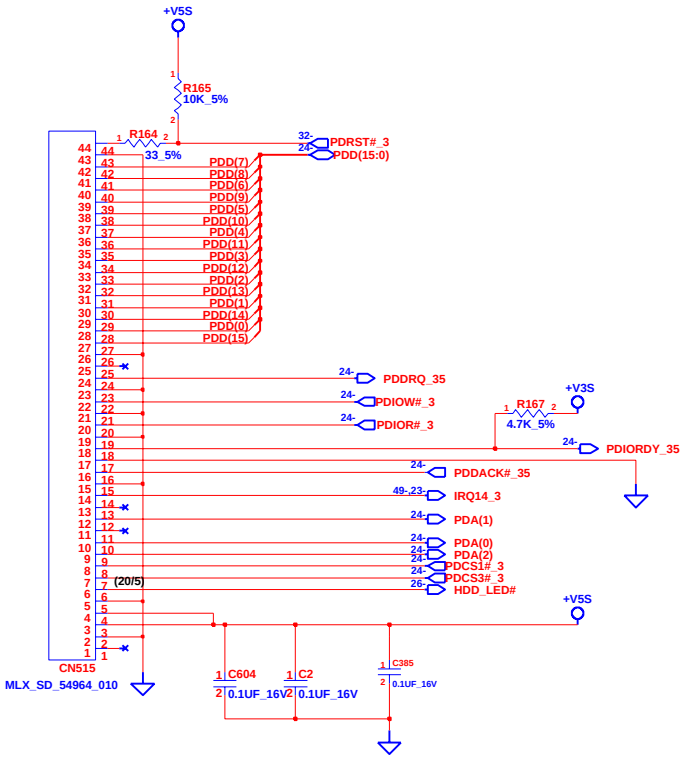

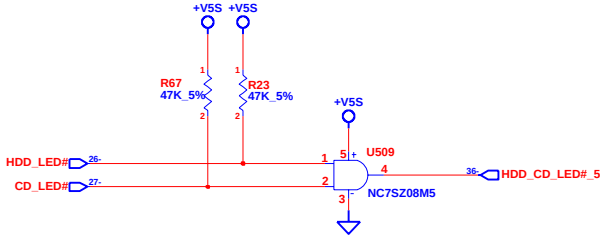

INVENTEC

TITLE **Cricket 5.0**

HDD CONNECTOR

SIZE	CODE	DOC. NUMBER	REV
A3	CS	QC5420	X01

CHANGE by RDEE3 29-Apr-2004

SHEET 26 OF 57

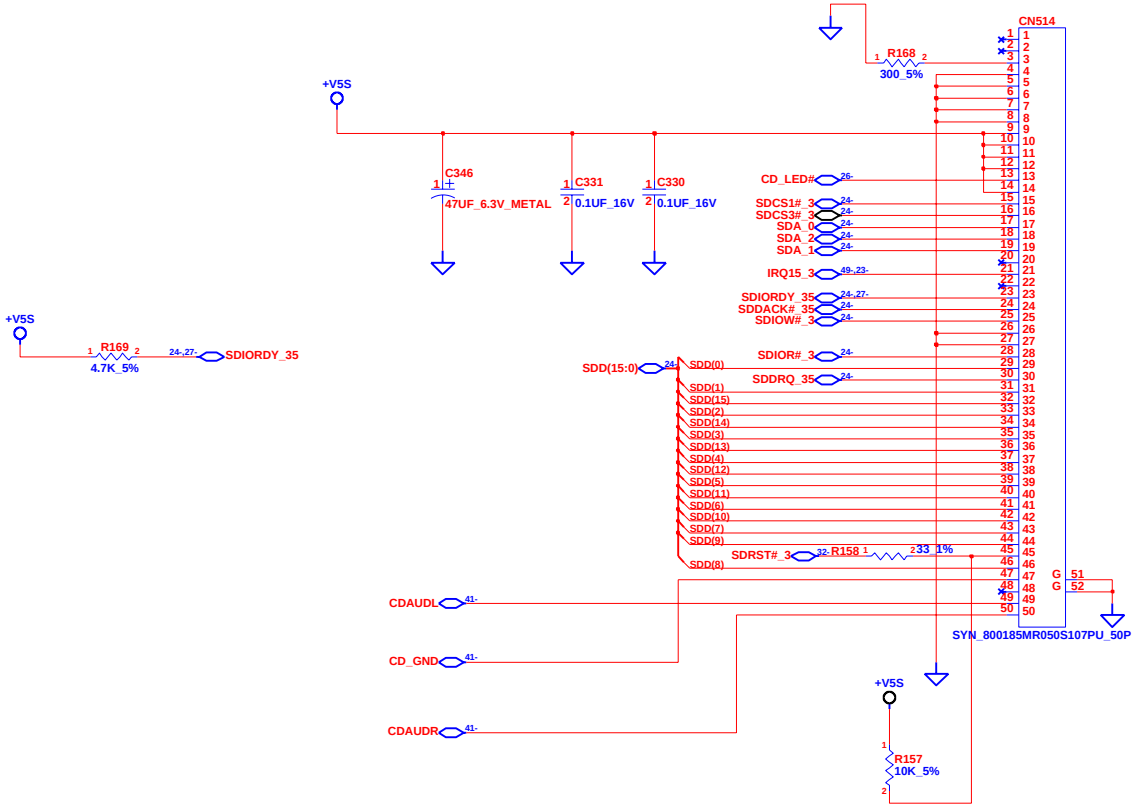

INVENTEC

TITLE **Cricket 5.0**

CD-ROM Connect

SIZE	CODE	DOC. NUMBER	REV
A3	CS	QC5420	X01

SHEET 27 OF 57

CHANGE by RDEE3 6-May-2004

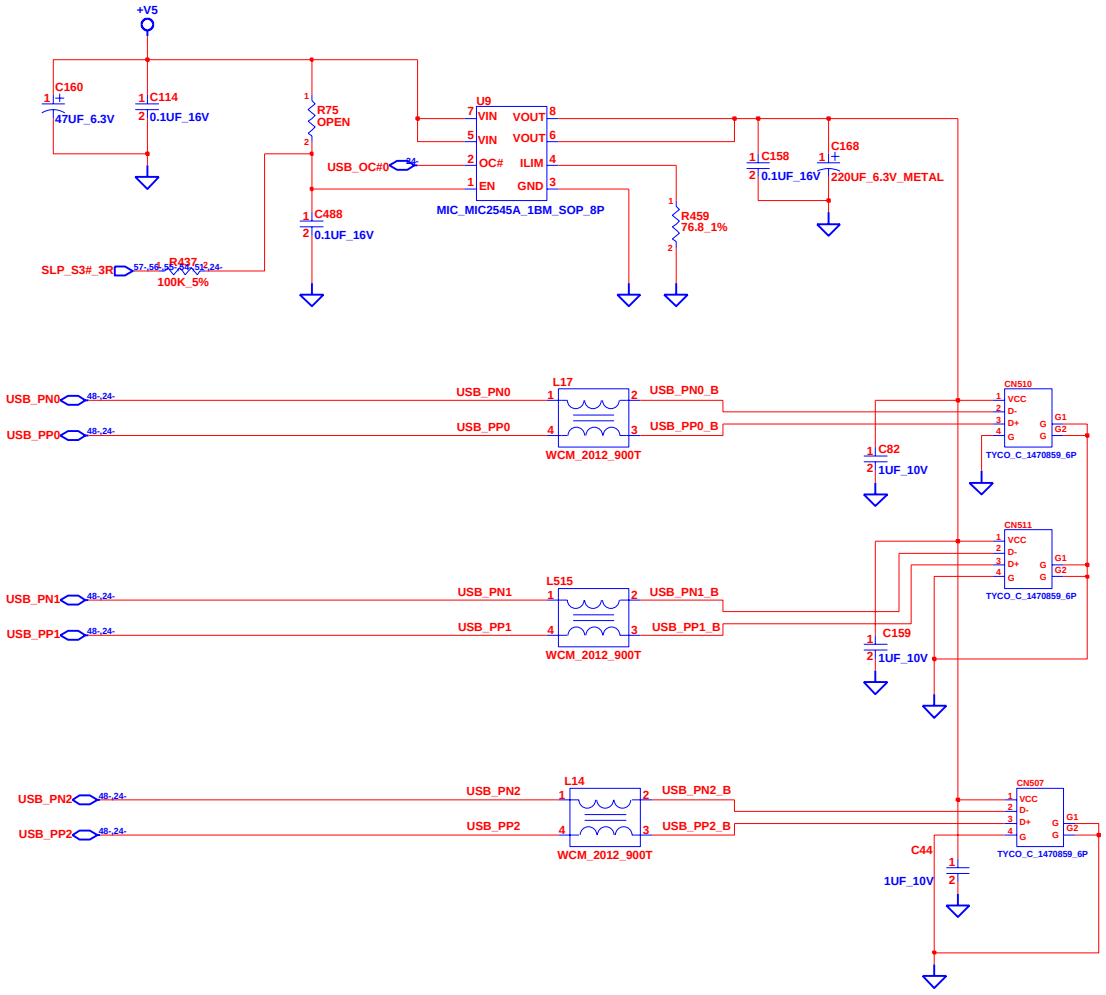

INVENTEC

TITLE Cricket 5.0

USB_PORT

SIZE	CODE	DOC. NUMBER	REV
A3	CS	QC5420	X01

CHANGE by RDEE3 25-Jun-2004

SHEET 28 OF 57

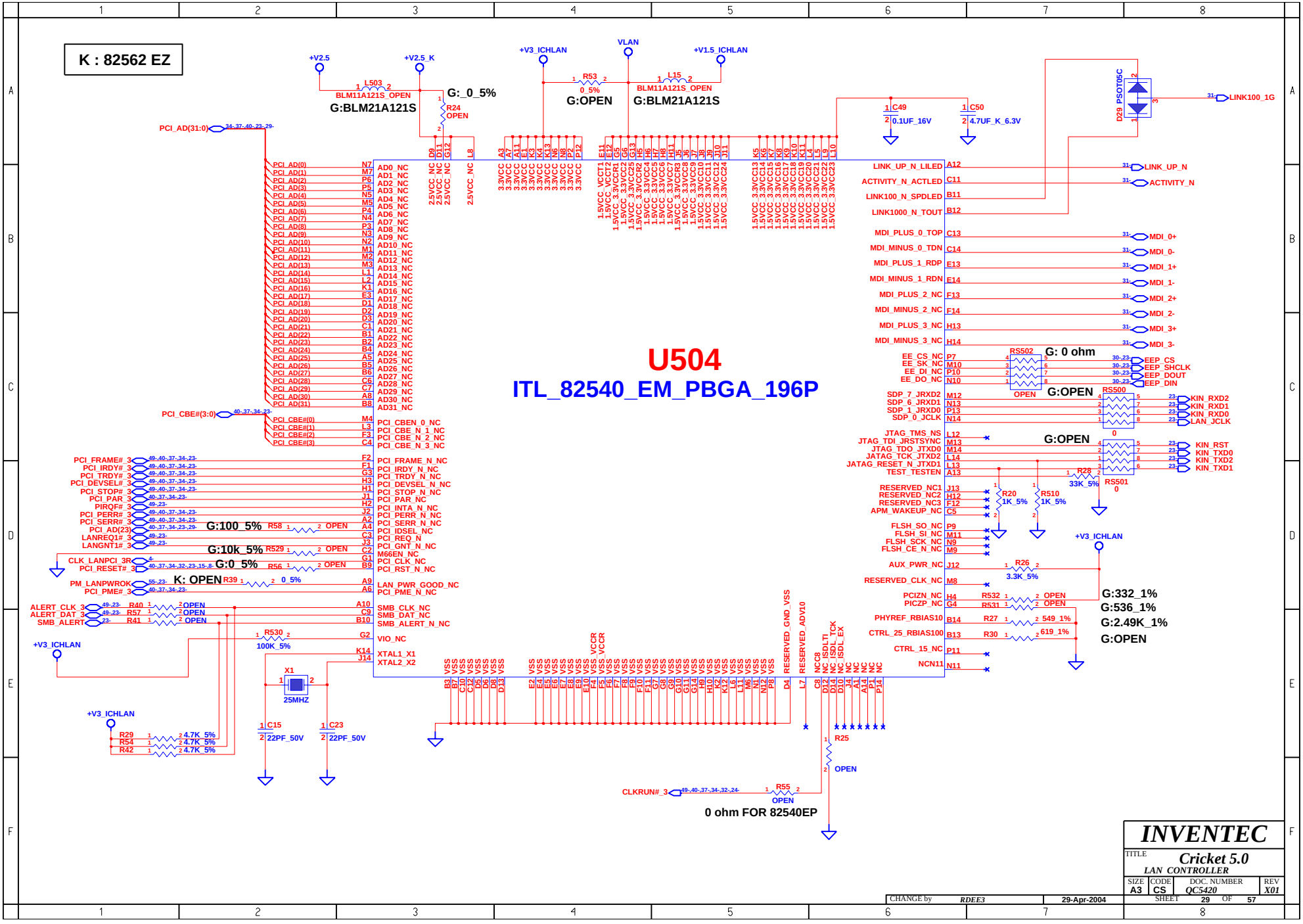
K : 82562 EZ
U504
ITL_82540_EM_PBGA_196P
+V2.5
+V2.5_K
L503
BLM11A121S_OPEN
G:BLM21A121S
G:_0_5%
R24
OPEN
+V3_ICHLAN
R53
0_5%
G:OPEN
VLAN
L15
BLM11A121S_OPEN
G:BLM21A121S
+V1.5_ICHLAN
C49
0.1UF_16V
C50
4.7UF_K_6.3V
D29 PSOT05C
LINK100_1G
PCI_AD(31:0)
PCI_CBE#(3:0)
LINK_UP_N_LILED
ACTIVITY_N_ACTLED
LINK100_N_SPDLED
LINK1000_N_TOUT
LINK_UP_N
ACTIVITY_N
MDI_PLUS_0_TOP
MDI_MINUS_0_TDN
MDI_PLUS_1_RDP
MDI_MINUS_1_RDN
MDI_PLUS_2_NC
MDI_MINUS_2_NC
MDI_PLUS_3_NC
MDI_MINUS_3_NC
MDI_0+
MDI_0-
MDI_1+
MDI_1-
MDI_2+
MDI_2-
MDI_3+
MDI_3-
EE_CS_NC
EE_SK_NC
EE_DI_NC
EE_DO_NC
RS502
G: 0 ohm
OPEN
G:OPEN
EEP_CS
EEP_SHCLK
EEP_DOUT
EEP_DIN
SDP_7_JRXD2
SDP_6_JRXD1
SDP_1_JRXD0
SDP_0_JCLK
RS500
KIN_RXD2
KIN_RXD1
KIN_RXD0
LAN_JCLK
JTAG_TMS_NS
JTAG_TDI_JRSTSYNC
JTAG_TDO_JTXD0
JATAG_TCK_JTXD2
JATAG_RESET_N_JTXD1
TEST_TESTEN
G:OPEN
KIN_RST
KIN_TXD0
KIN_TXD2
KIN_TXD1
R28
33K_5%
RS501
RESERVED_NC1
RESERVED_NC2
RESERVED_NC3
APM_WAKEUP_NC
R20
1K_5%
R510
1K_5%
FLSH_SO_NC
FLSH_SI_NC
FLSH_SCK_NC
FLSH_CE_N_NC
AUX_PWR_NC
R26
3.3K_5%
RESERVED_CLK_NC
PCIZN_NC
PICZP_NC
R532
R531
OPEN
PHYREF_RBIAS10
R27
549_1%
CTRL_25_RBIAS100
R30
619_1%
CTRL_15_NC
NCN11
G:332_1%
G:536_1%
G:2.49K_1%
G:OPEN
PCI_FRAME#
PCI_IRDY#
PCI_TRDY#
PCI_DEVSEL#
PCI_STOP#
PCI_PAR
PIRQF#
PCI_PERR#
PCI_SERR#
PCI_AD(23)
LANREQ1#
LANGNT1#
R58
G:100_5%
OPEN
R529
G:10k_5%
CLK_LANPCI_3R
PCI_RESET#
R56
G:0_5%
PM_LANPWROK
PCI_PME#
R39
K: OPEN
0_5%
ALERT_CLK
ALERT_DAT
SMB_ALERT
R40
R57
R41
OPEN
R530
100K_5%
X1
25MHZ
C15
22PF_50V
C23
22PF_50V
R29
R54
R42
4.7K_5%
CLKRUN#
R55
OPEN
0 ohm FOR 82540EP
R25
OPEN
INVENTEC
TITLE
Cricket 5.0
LAN CONTROLLER
SIZE A3
CODE CS
DOC. NUMBER QC5420
REV X01
SHEET 29 OF 57
CHANGE by RDEE3
29-Apr-2004

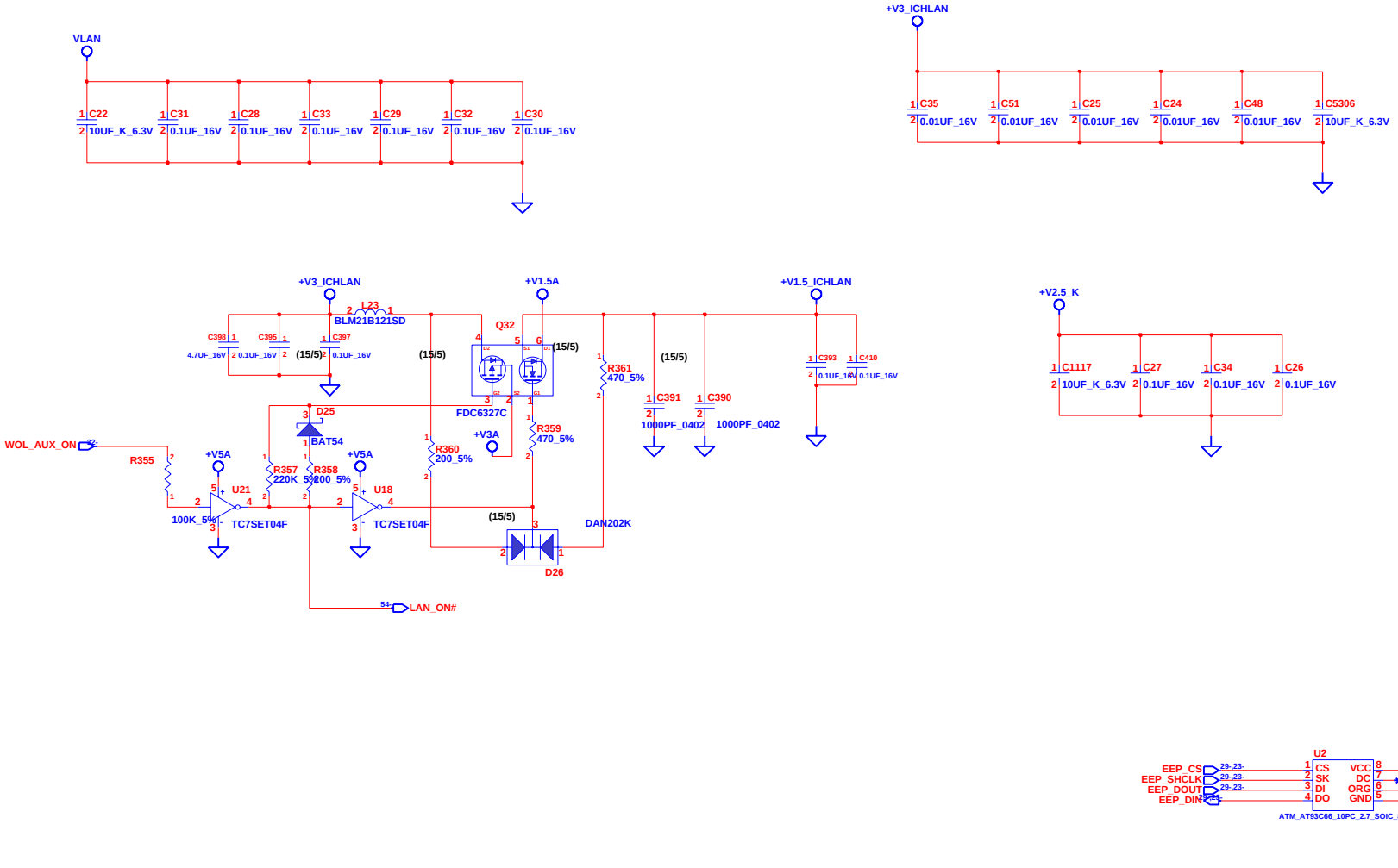

INVENTEC

TITLE **Cricket 5.0**

LAN POWER

SIZE	CODE	DOC. NUMBER	REV
A3	CS	QC5420	X01

CHANGE by *RDEE3* 29-Apr-2004

SHEET 30 OF 57

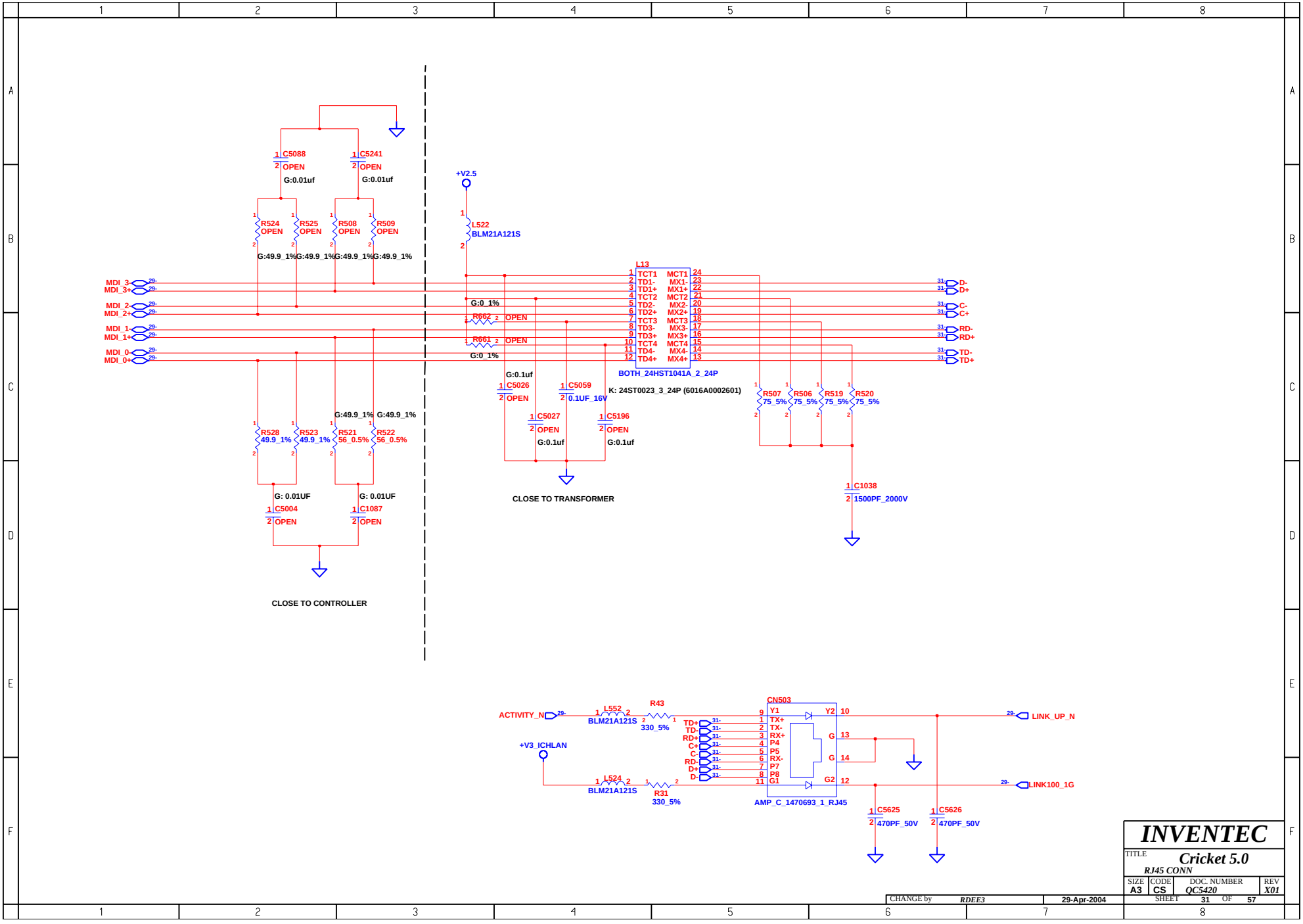
C5088
OPEN
G:0.01uf
C5241
OPEN
G:0.01uf
R524
OPEN
R525
OPEN
R508
OPEN
R509
OPEN
G:49.9_1%
+V2.5
L522
BLM21A121S
MDI_3-
MDI_3+
MDI_2-
MDI_2+
MDI_1-
MDI_1+
MDI_0-
MDI_0+
L13
TCT1
TD1-
TD1+
TCT2
TD2-
TD2+
TCT3
TD3-
TD3+
TCT4
TD4-
TD4+
MCT1
MX1-
MX1+
MCT2
MX2-
MX2+
MCT3
MX3-
MX3+
MCT4
MX4-
MX4+
BOTH_24HST1041A_2_24P
K: 24ST0023_3_24P (6016A0002601)
R662
OPEN
R661
OPEN
G:0_1%
C5026
OPEN
C5059
0.1UF_16V
C5027
OPEN
C5196
OPEN
G:0.1uf
CLOSE TO TRANSFORMER
R507
75_5%
R506
75_5%
R519
75_5%
R520
75_5%
C1038
1500PF_2000V
D-
D+
C-
C+
RD-
RD+
TD-
TD+
R528
49.9_1%
R523
49.9_1%
R521
56_0.5%
R522
56_0.5%
G:49.9_1%
G: 0.01UF
C5004
OPEN
C1087
OPEN
CLOSE TO CONTROLLER
ACTIVITY_N
L552
BLM21A121S
R43
330_5%
+V3_ICHLAN
L524
BLM21A121S
R31
330_5%
CN503
Y1
TX+
TX-
RX+
P4
P5
RX-
P7
P8
G1
Y2
G
G2
AMP_C_1470693_1_RJ45
LINK_UP_N
LINK100_1G
C5625
470PF_50V
C5626
470PF_50V
INVENTEC
TITLE
Cricket 5.0
RJ45 CONN
SIZE A3
CODE CS
DOC. NUMBER QC5420
REV X01
SHEET 31 OF 57
CHANGE by RDEE3
29-Apr-2004

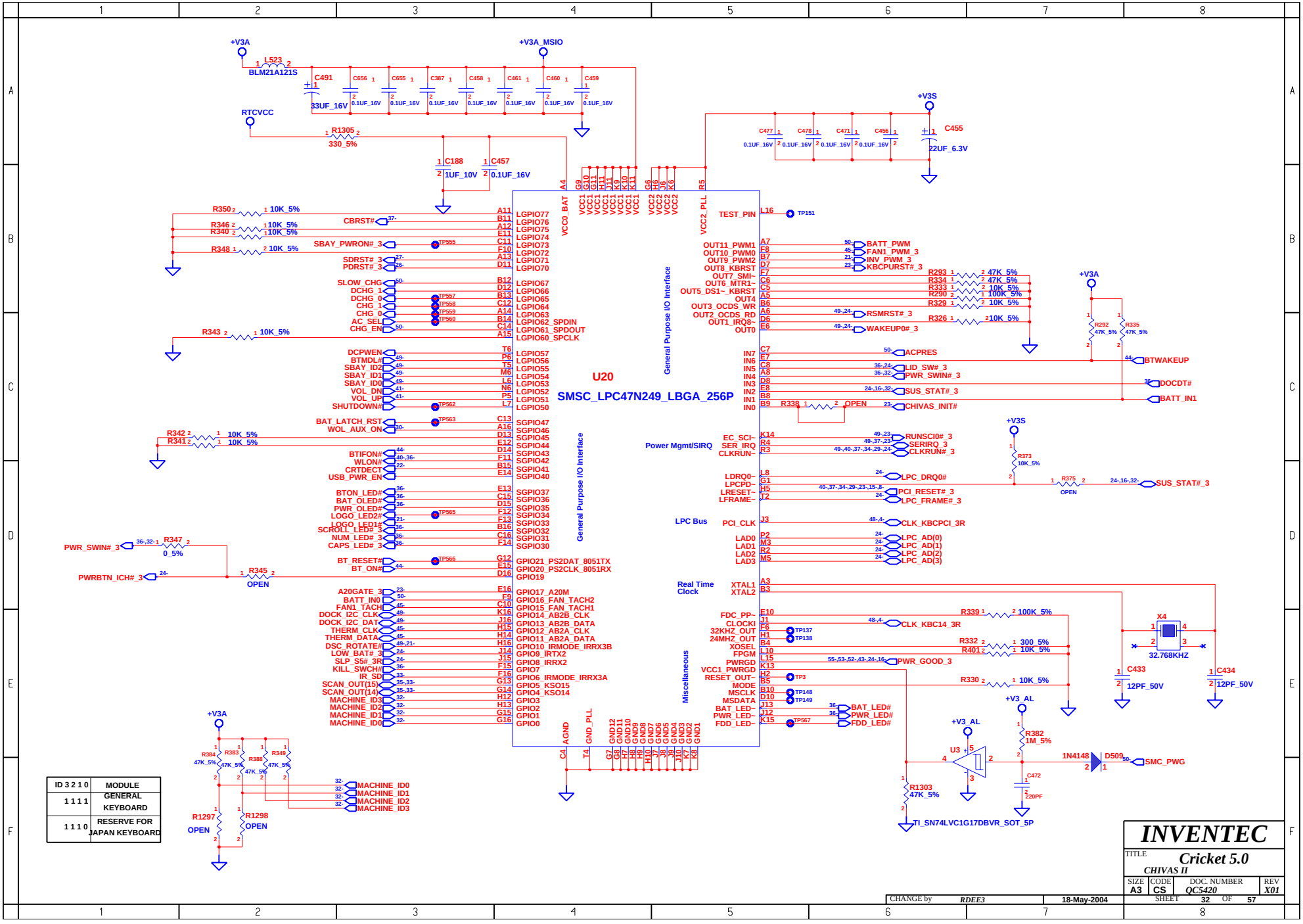

ID 3 2 1 0	MODULE
1 1 1 1	GENERAL KEYBOARD
1 1 1 0	RESERVE FOR JAPAN KEYBOARD

INVENTEC

TITLE **Cricket 5.0**

CHIVAS II

SIZE	CODE	DOC. NUMBER	REV
A3	CS	QC5420	X01

CHANGE by RDEE3 | 18-May-2004 | SHEET 32 OF 57

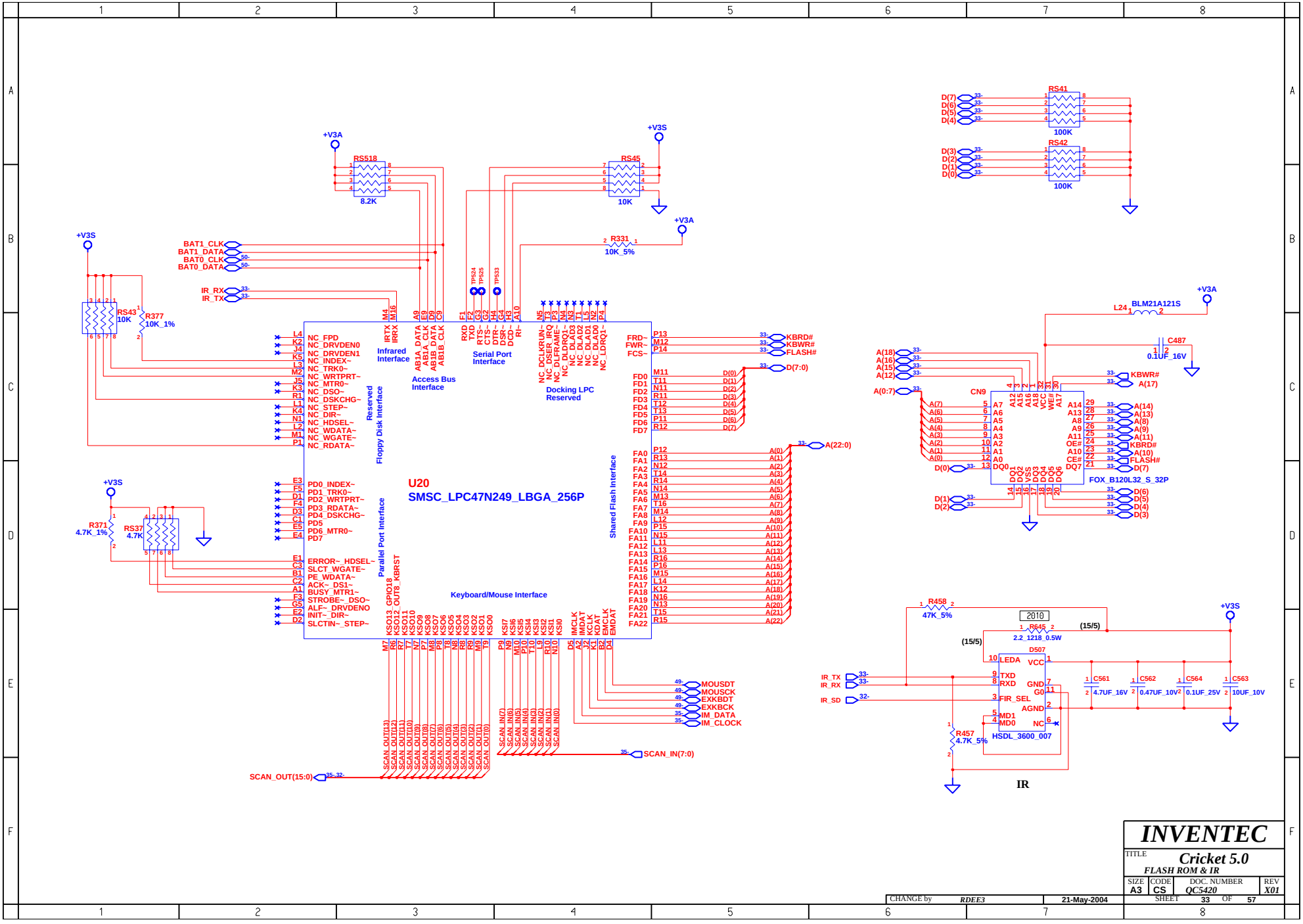
U20
SMSC_LPC47N249_LBGA_256P
Infrared Interface
Access Bus Interface
Serial Port Interface
Docking LPC Reserved
Reserved
Floppy Disk Interface
Parallel Port Interface
Shared Flash Interface
Keyboard/Mouse Interface
NC_FPD
NC_DRVDEN0
NC_DRVDEN1
NC_INDEX~
NC_TRK0~
NC_WRTPRT~
NC_MTR0~
NC_DSO~
NC_DSKCHG~
NC_STEP~
NC_DIR~
NC_HDSEL~
NC_WDATA~
NC_WGATE~
NC_RDATA~
PD0_INDEX~
PD1_TRK0~
PD2_WRTPRT~
PD3_RDATA~
PD4_DSKCHG~
PD5
PD6_MTR0~
PD7
ERROR~_HDSEL~
SLCT_WGATE~
PE_WDATA~
ACK~_DS1~
BUSY_MTR1~
STROBE~_DSO~
ALF~_DRVDENO
INIT~_DIR~
SLCTIN~_STEP~
BAT1_CLK
BAT1_DATA
BAT0_CLK
BAT0_DATA
IR_RX
IR_TX
RS518
8.2K
RS45
10K
R331
10K_5%
RS43
10K
R377
10K_1%
R371
4.7K_1%
RS37
4.7K
RS41
100K
RS42
100K
KBRD#
KBWR#
FLASH#
D(7:0)
A(22:0)
MOUSDT
MOUSCK
EXKBDT
EXKBCK
IM_DATA
IM_CLOCK
SCAN_IN(7:0)
SCAN_OUT(15:0)
L24
BLM21A121S
C487
0.1UF_16V
CN9
FOX_B120L32_S_32P
R458
47K_5%
R645
2.2_1218_0.5W
D507
HSDL_3600_007
R457
4.7K_5%
C561
4.7UF_16V
C562
0.47UF_10V
C564
0.1UF_25V
C563
10UF_10V
IR
INVENTEC
TITLE
Cricket 5.0
FLASH ROM & IR
SIZE A3
CODE CS
DOC. NUMBER QC5420
REV X01
SHEET 33 OF 57
CHANGE by RDEE3
21-May-2004

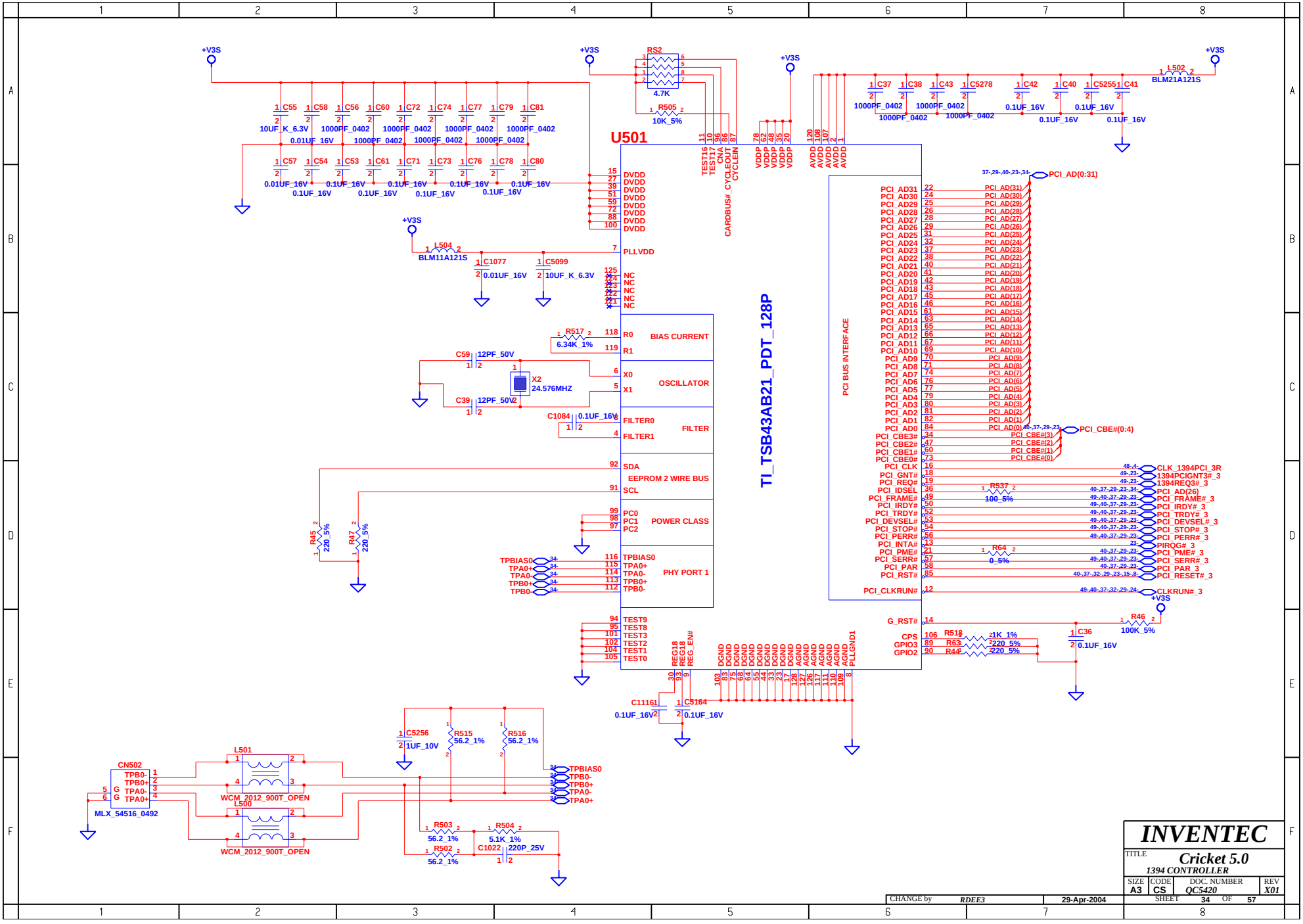
U501
TI_TSB43AB21_PDT_128P
PCI BUS INTERFACE
BIAS CURRENT
OSCILLATOR
FILTER
EEPROM 2 WIRE BUS
POWER CLASS
PHY PORT 1
PCI_AD(0:31)
PCI_CBE#(0:4)
CN502
MLX_54516_0492
L501
L500
WCM_2012_900T_OPEN
INVENTEC
Cricket 5.0
1394 CONTROLLER
SIZE A3
CODE CS
DOC. NUMBER QC5420
REV X01
SHEET 34 OF 57
CHANGE by RDEE3
29-Apr-2004

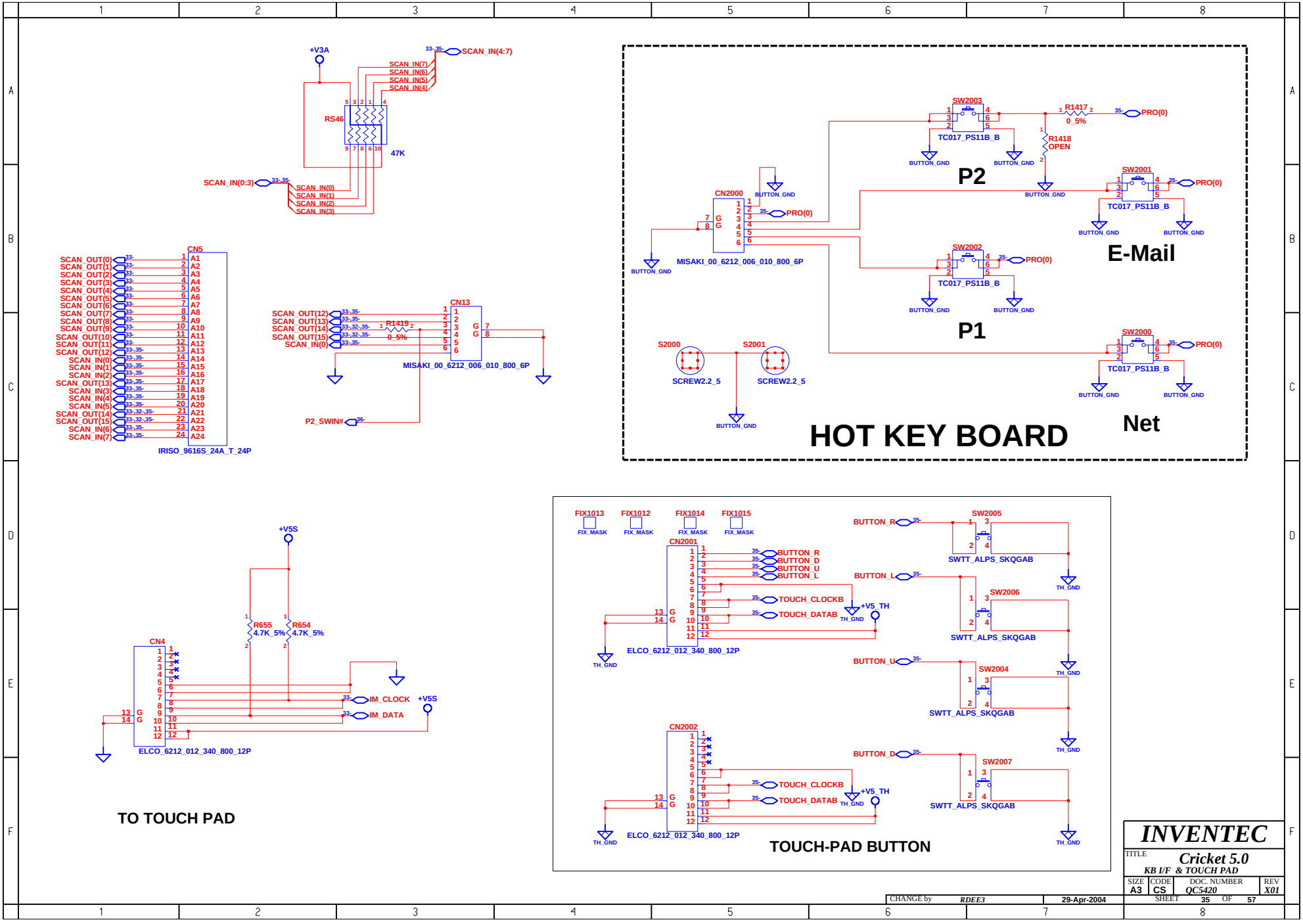
+V3A
SCAN_IN(4:7)
SCAN_IN(7)
SCAN_IN(6)
SCAN_IN(5)
SCAN_IN(4)
RS46
47K
SCAN_IN(0:3)
SCAN_IN(0)
SCAN_IN(1)
SCAN_IN(2)
SCAN_IN(3)
CN5
SCAN_OUT(0)
SCAN_OUT(1)
SCAN_OUT(2)
SCAN_OUT(3)
SCAN_OUT(4)
SCAN_OUT(5)
SCAN_OUT(6)
SCAN_OUT(7)
SCAN_OUT(8)
SCAN_OUT(9)
SCAN_OUT(10)
SCAN_OUT(11)
SCAN_OUT(12)
SCAN_IN(0)
SCAN_IN(1)
SCAN_IN(2)
SCAN_IN(3)
SCAN_IN(4)
SCAN_IN(5)
SCAN_OUT(14)
SCAN_OUT(15)
SCAN_IN(6)
SCAN_IN(7)
IRISO_9616S_24A_T_24P
CN13
SCAN_OUT(12)
SCAN_OUT(13)
SCAN_OUT(14)
SCAN_OUT(15)
SCAN_IN(0)
R1419
0_5%
MISAKI_00_6212_006_010_800_6P
P2_SWIN#
SW2003
TC017_PS11B_B
R1417
0_5%
PRO(0)
R1418
OPEN
BUTTON_GND
P2
CN2000
MISAKI_00_6212_006_010_800_6P
SW2001
TC017_PS11B_B
E-Mail
SW2002
TC017_PS11B_B
P1
S2000
S2001
SCREW2.2_5
SW2000
TC017_PS11B_B
Net
HOT KEY BOARD
+V5S
R655
4.7K_5%
R654
4.7K_5%
CN4
IM_CLOCK
IM_DATA
ELCO_6212_012_340_800_12P
TO TOUCH PAD
FIX1013
FIX1012
FIX1014
FIX1015
FIX_MASK
CN2001
BUTTON_R
BUTTON_D
BUTTON_U
BUTTON_L
TOUCH_CLOCKB
TOUCH_DATAB
+V5_TH
TH_GND
ELCO_6212_012_340_800_12P
SW2005
SWTT_ALPS_SKQGAB
SW2006
SWTT_ALPS_SKQGAB
SW2004
SWTT_ALPS_SKQGAB
CN2002
SW2007
SWTT_ALPS_SKQGAB
ELCO_6212_012_340_800_12P
TOUCH-PAD BUTTON
INVENTEC
TITLE
Cricket 5.0
KB I/F & TOUCH PAD
SIZE A3
CODE CS
DOC. NUMBER QC5420
REV X01
CHANGE by RDEE3
29-Apr-2004
SHEET 35 OF 57

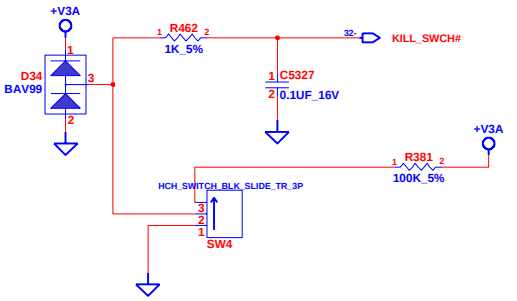

KILL SWITCH

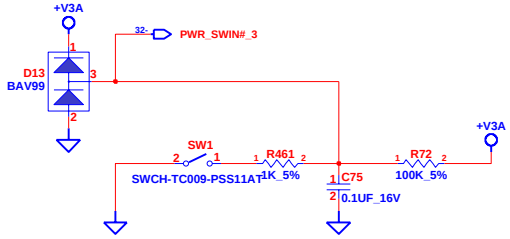

PWR SWITCH

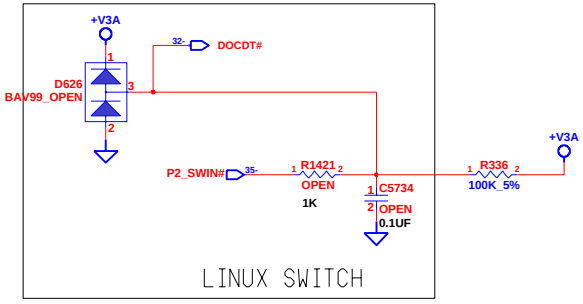

LINUX SWITCH

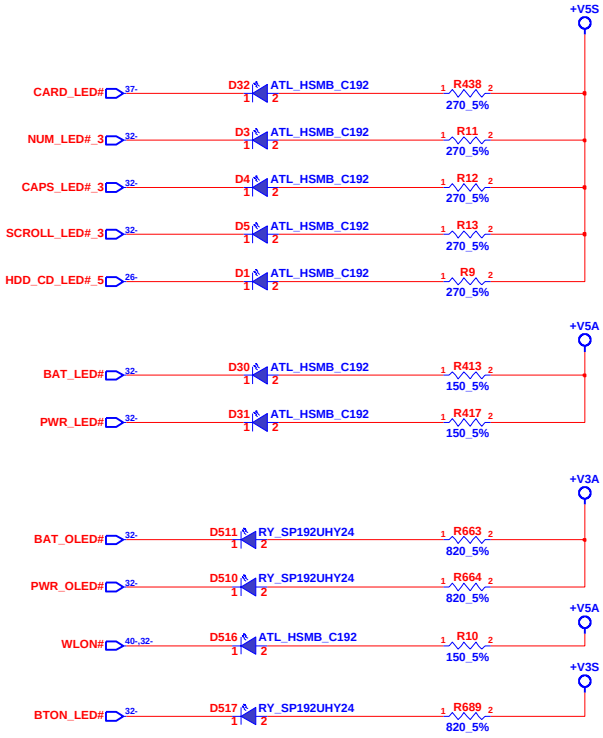

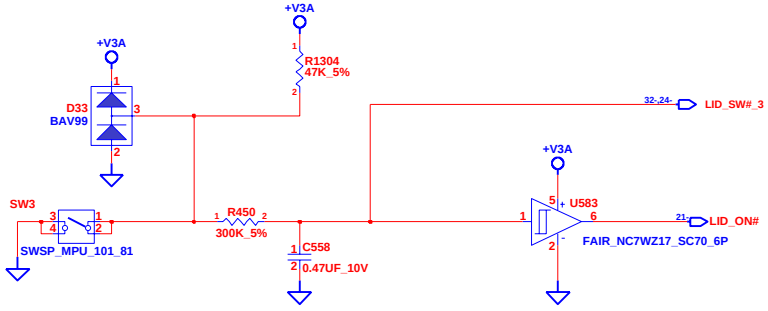

LID SWITCH

INVENTEC

TITLE **Cricket 5.0**

SWITCHES / LEDS

SIZE	CODE	DOC. NUMBER	REV
A3	CS	QC5420	X01

CHANGE by RDEE3 29-Apr-2004

SHEET 36 OF 57

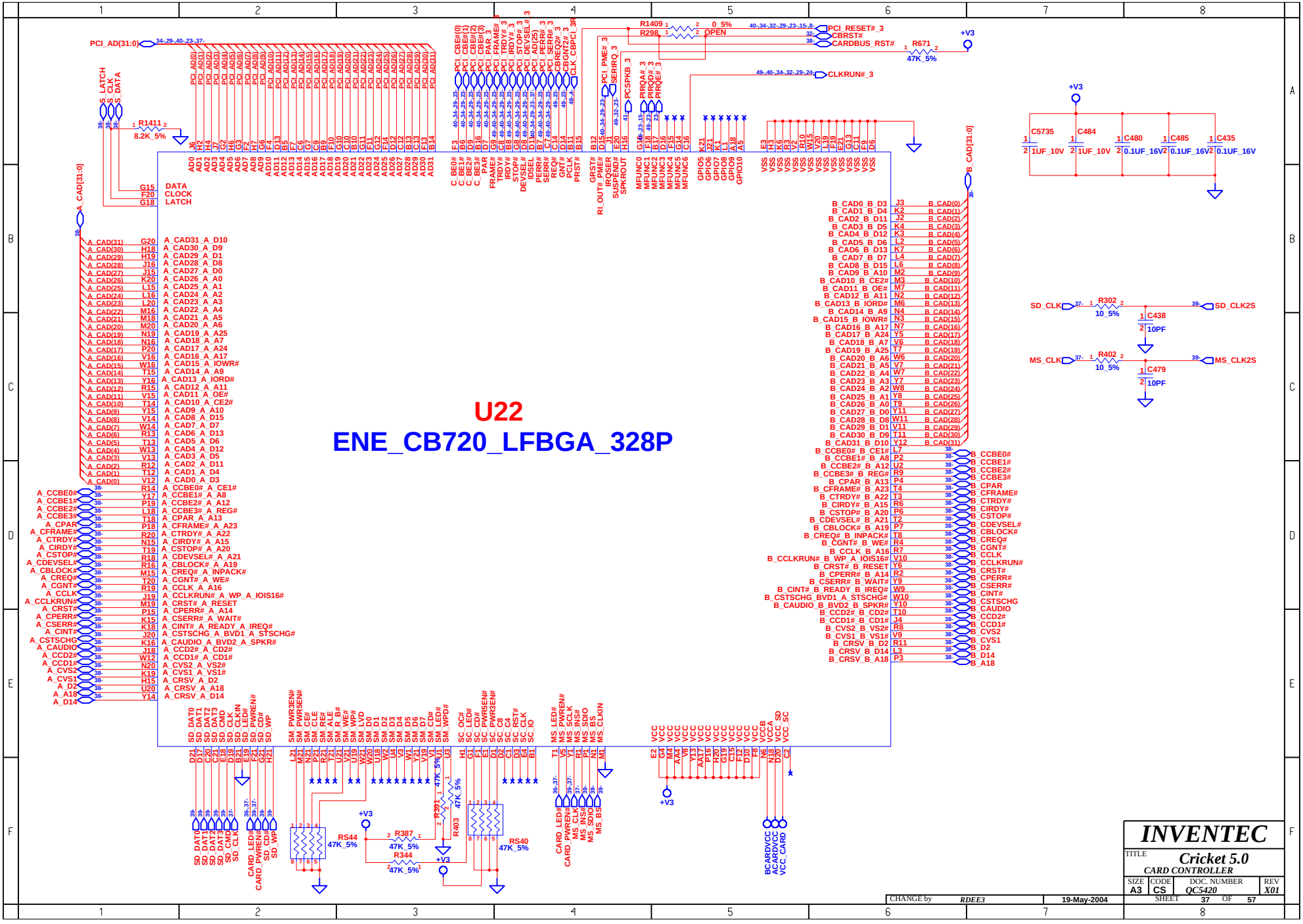
U22
ENE_CB720_LFBGA_328P
INVENTEC
Cricket 5.0
CARD CONTROLLER
SIZE A3
CODE CS
DOC. NUMBER QC5420
REV X01
SHEET 37 OF 57
CHANGE by RDEE3
19-May-2004

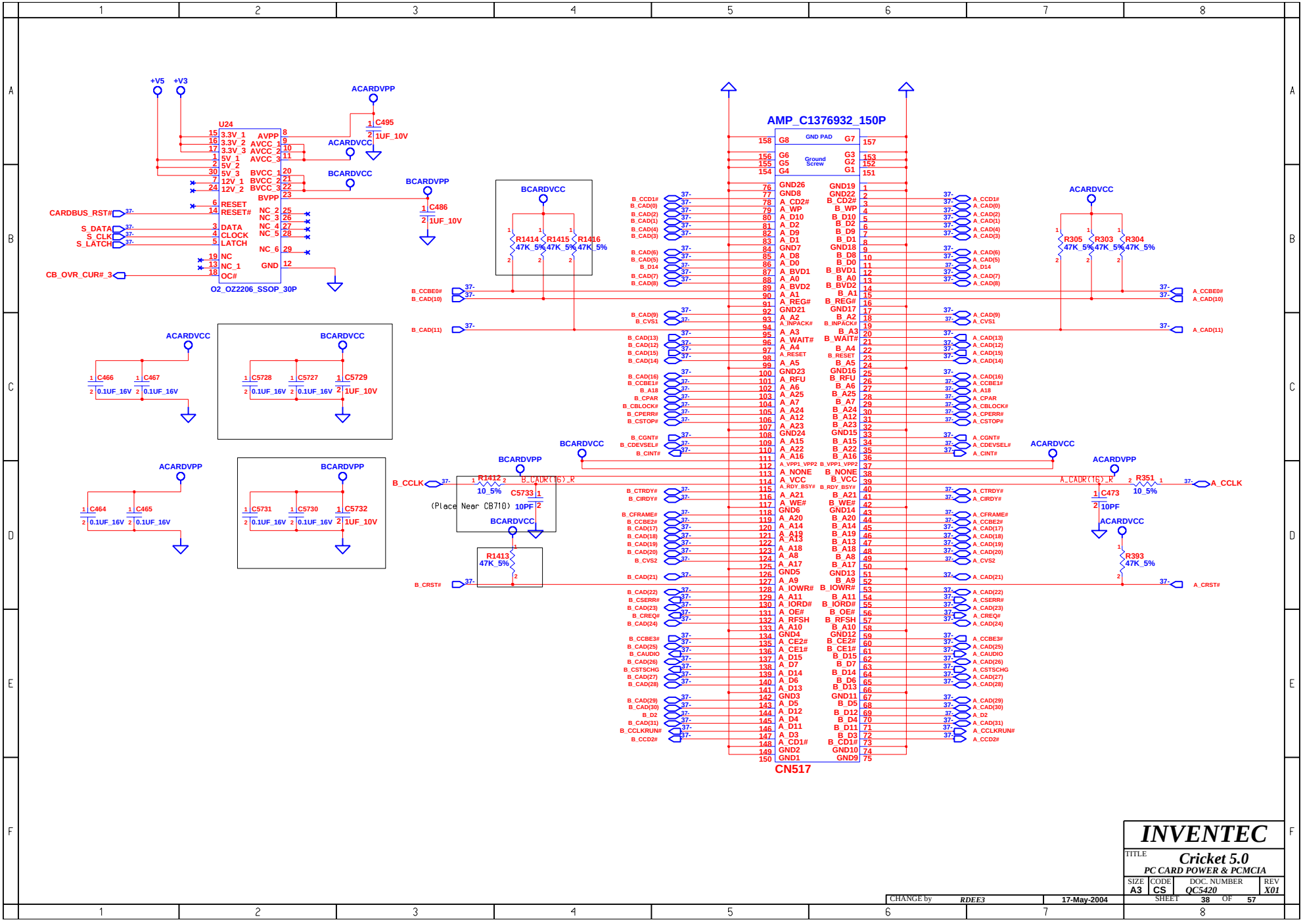
AMP_C1376932_150P
CN517
U24
O2_OZ2206_SSOP_30P
+V5
+V3
ACARDVPP
ACARDVCC
BCARDVCC
BCARDVPP
C495
1UF_10V
C486
1UF_10V
CARDBUS_RST#
S_DATA
S_CLK
S_LATCH
CB_OVR_CUR#_3
R1414
R1415
R1416
47K_5%
R305
R303
R304
C466
C467
0.1UF_16V
C5728
C5727
C5729
1UF_10V
C464
C465
C5731
C5730
C5732
B_CCLK
A_CCLK
R1412
10_5%
C5733
10PF
(Place Near CB710)
R1413
B_CRST#
A_CRST#
R351
C473
R393
A_CADR(16)_R
B_CADR(16)_R
INVENTEC
Cricket 5.0
PC CARD POWER & PCMCIA
SIZE A3
CODE CS
DOC. NUMBER QC5420
REV X01
SHEET 38 OF 57
CHANGE by RDEE3
17-May-2004

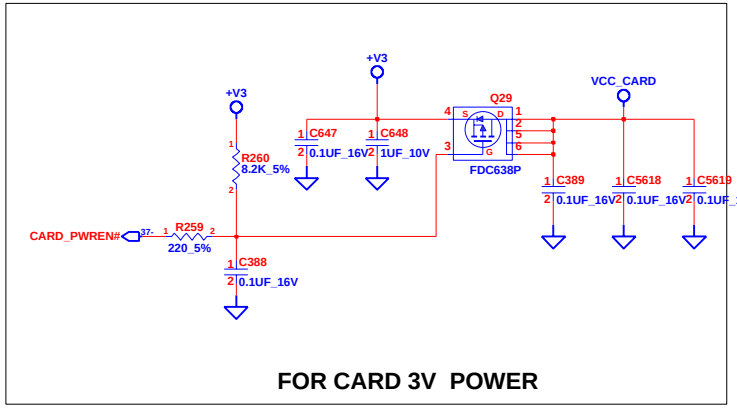

FOR CARD 3V POWER

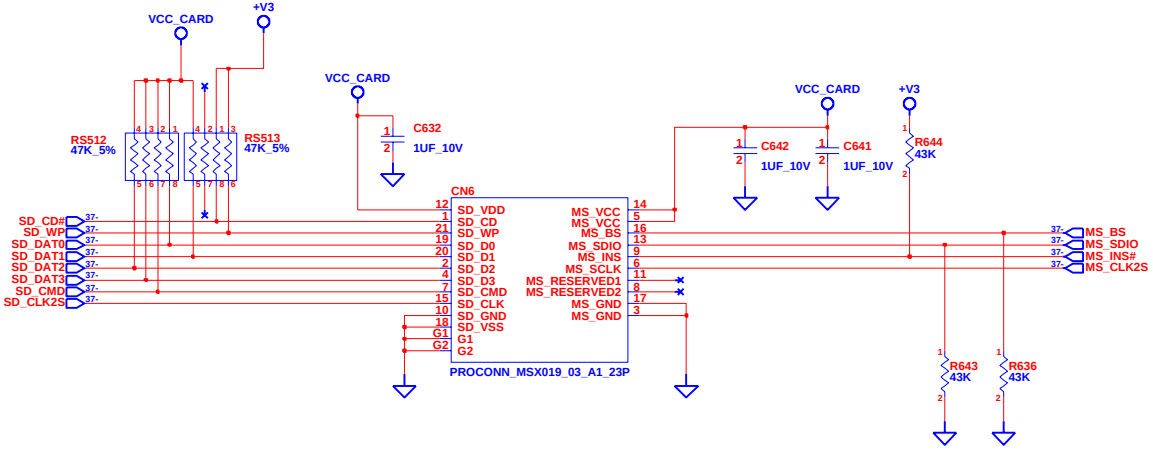

CHANGE by	RDEE3	29-Apr-2004	

INVENTEC

TITLE **Cricket 5.0**

3 IN 1 Connector

SIZE	CODE	DOC. NUMBER	REV
A3	CS	QC5420	X01

SHEET 39 OF 57

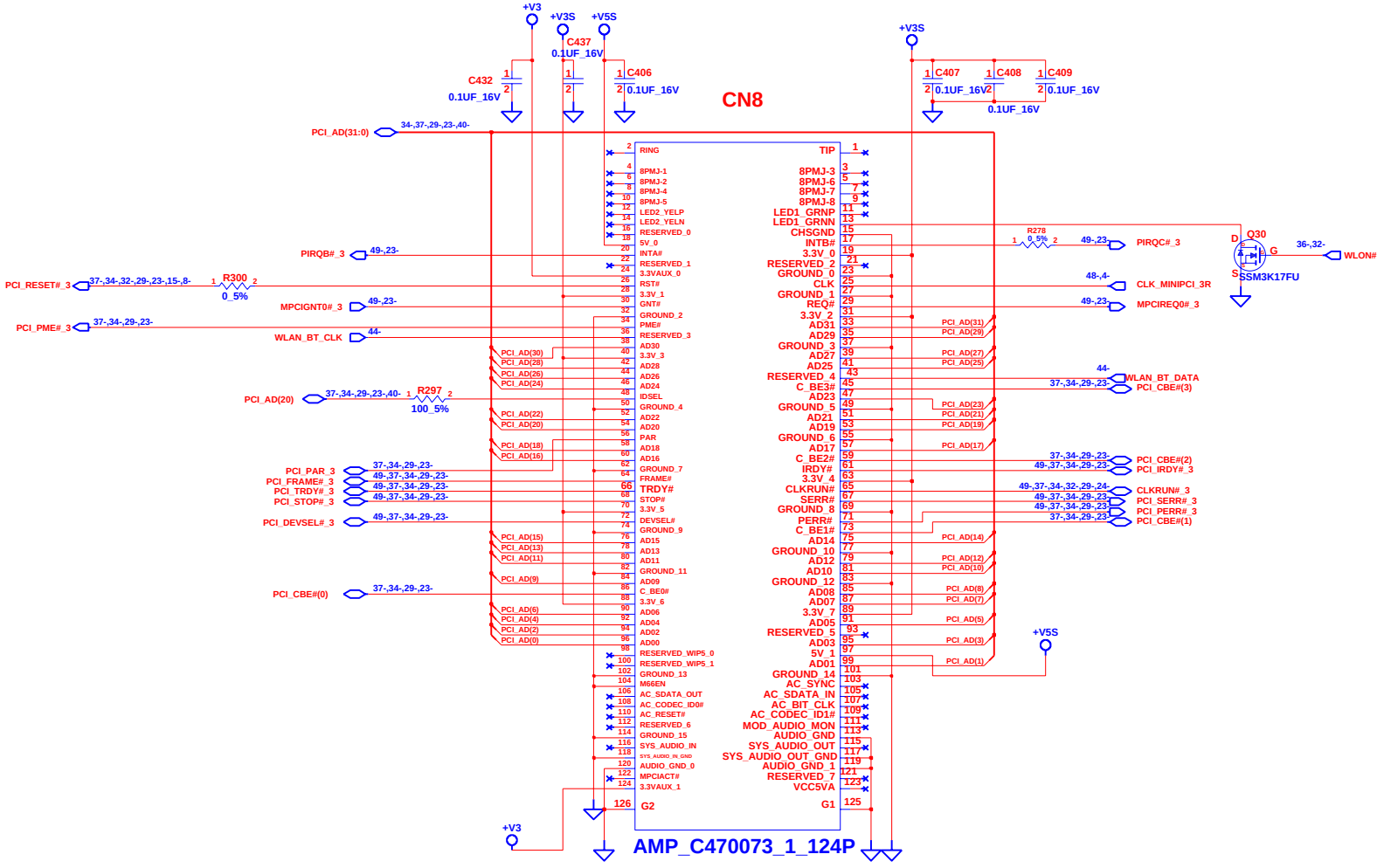

CHANGE by	RDEE3	29-Apr-2004	

INVENTEC

TITLE: Cricket 5.0
MINI PCI

SIZE	CODE	DOC. NUMBER	REV
A3	CS	QC5420	X01

SHEET 40 OF 57

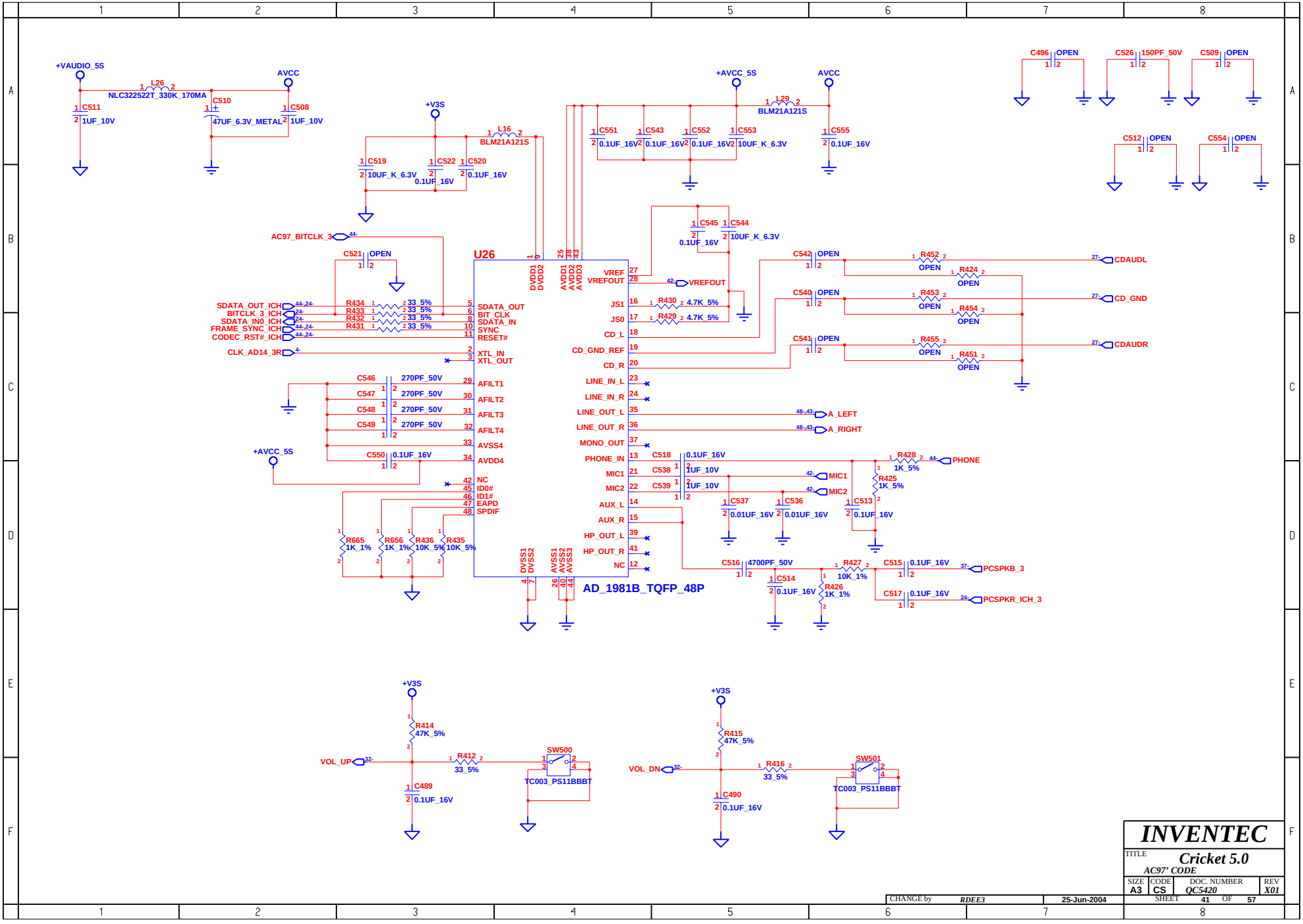

INVENTEC

TITLE Cricket 5.0

AC97' CODE

SIZE	CODE	DOC. NUMBER	REV
A3	CS	QC5420	X01

SHEET 41 OF 57

CHANGE by RDEE3 25-Jun-2004

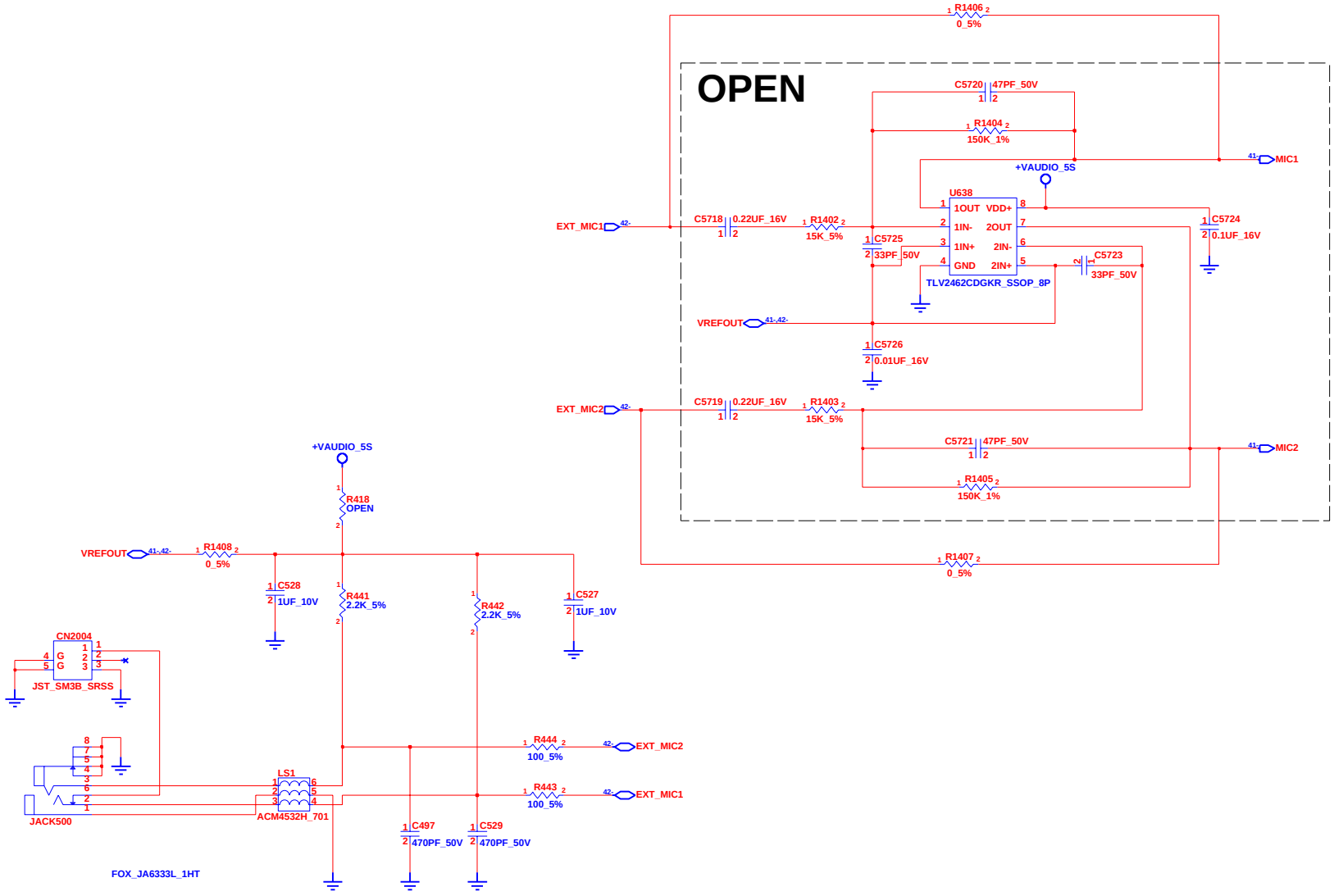

INVENTEC			
TITLE	Cricket 5.0 VR & MIC JACK		
SIZE A3	CODE CS	DOC. NUMBER QC5420	REV X01
CHANGE by RDEE3	13-May-2004	SHEET 42 OF 57	

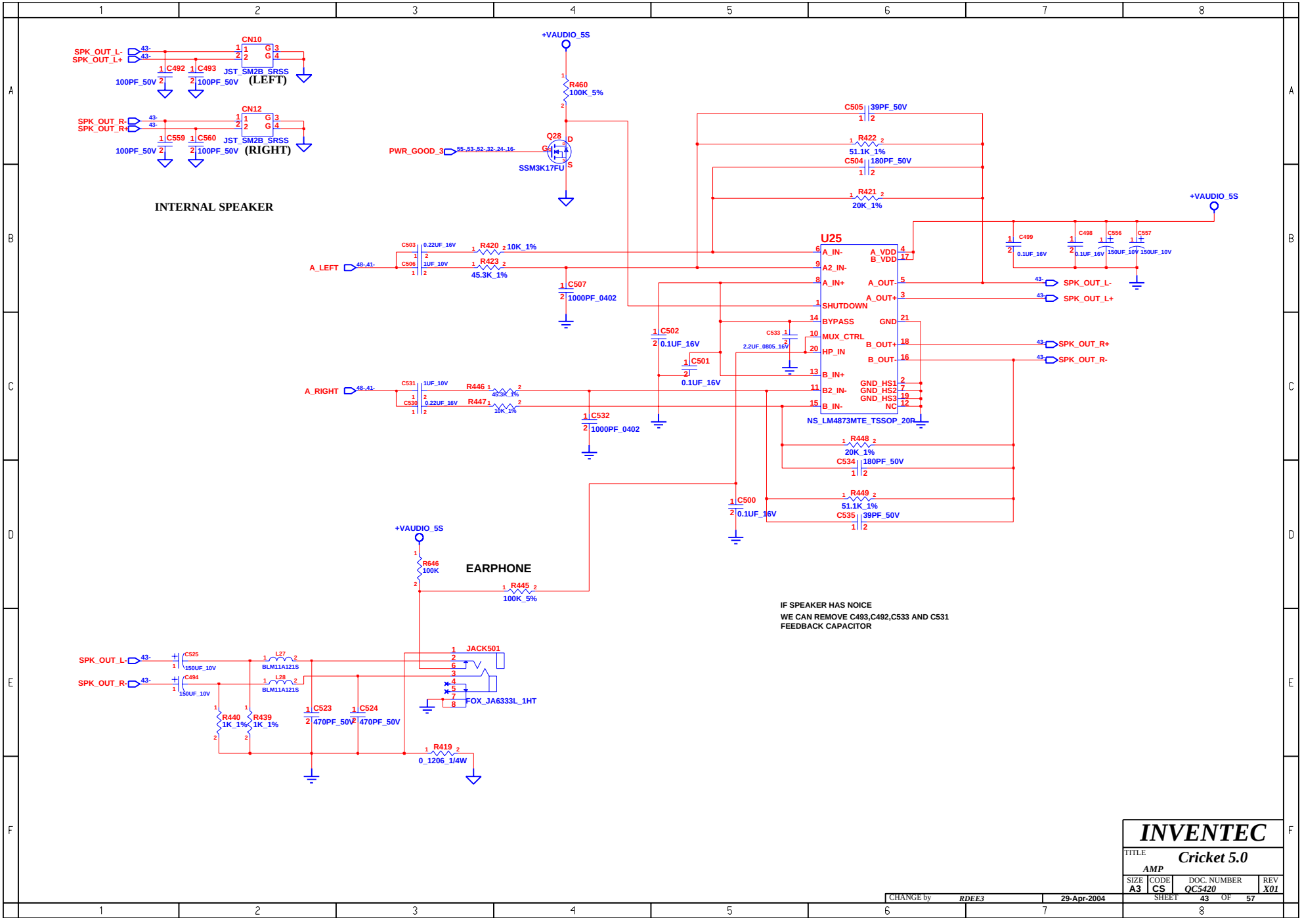
INTERNAL SPEAKER
CN10
SPK_OUT_L-
SPK_OUT_L+
C492 100PF_50V
C493 100PF_50V
JST_SM2B_SRSS
(LEFT)
CN12
SPK_OUT_R-
SPK_OUT_R+
C559 100PF_50V
C560 100PF_50V
JST_SM2B_SRSS
(RIGHT)
+VAUDIO_5S
R460 100K_5%
PWR_GOOD_3
Q28
SSM3K17FU
C505 39PF_50V
R422 51.1K_1%
C504 180PF_50V
R421 20K_1%
U25
A_LEFT
C503 0.22UF_16V
C506 1UF_10V
R420 10K_1%
R423 45.3K_1%
C507 1000PF_0402
A_IN-
A2_IN-
A_IN+
SHUTDOWN
BYPASS
MUX_CTRL
HP_IN
B_IN+
B2_IN-
B_IN-
A_VDD
B_VDD
A_OUT-
A_OUT+
GND
B_OUT+
B_OUT-
GND_HS1
GND_HS2
GND_HS3
NC
NS_LM4873MTE_TSSOP_20R
C502 0.1UF_16V
C501 0.1UF_16V
C533 2.2UF_0805_16V
A_RIGHT
C531 1UF_10V
C530 0.22UF_16V
R446 45.3K_1%
R447 10K_1%
C532 1000PF_0402
C499 0.1UF_16V
C498 0.1UF_16V
C556 150UF_10V
C557 150UF_10V
SPK_OUT_L-
SPK_OUT_L+
SPK_OUT_R+
SPK_OUT_R-
R448 20K_1%
C534 180PF_50V
R449 51.1K_1%
C535 39PF_50V
C500 0.1UF_16V
EARPHONE
R646 100K
R445 100K_5%
IF SPEAKER HAS NOICE
WE CAN REMOVE C493,C492,C533 AND C531
FEEDBACK CAPACITOR
JACK501
FOX_JA6333L_1HT
C525 150UF_10V
C494 150UF_10V
L27 BLM11A121S
L28 BLM11A121S
R440 1K_1%
R439 1K_1%
C523 470PF_50V
C524 470PF_50V
R419 0_1206_1/4W
INVENTEC
TITLE
Cricket 5.0
AMP
SIZE A3
CODE CS
DOC. NUMBER QC5420
REV X01
CHANGE by RDEE3
29-Apr-2004
SHEET 43 OF 57

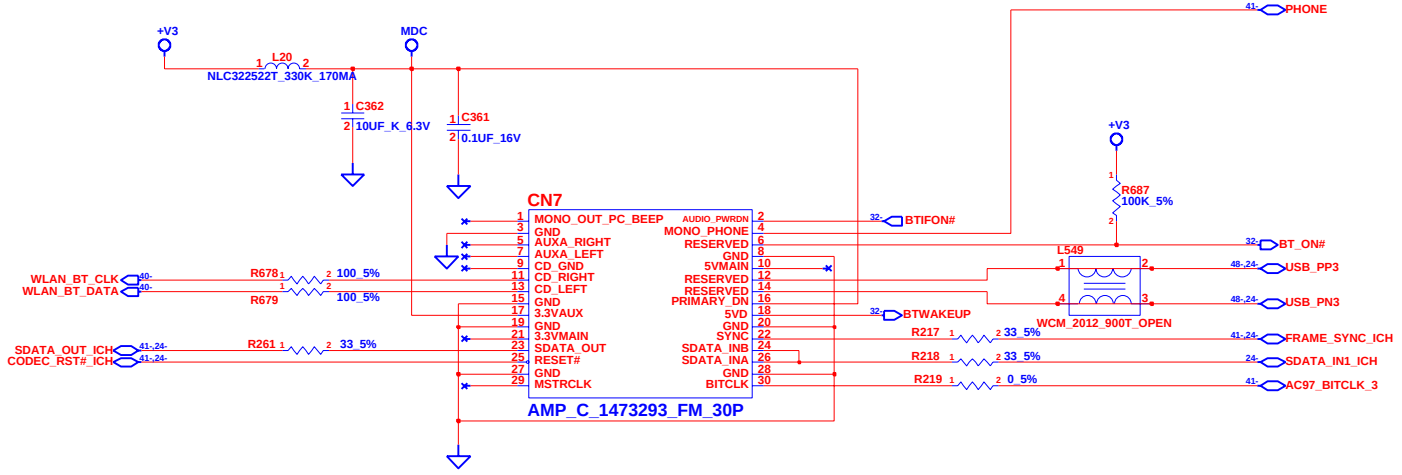

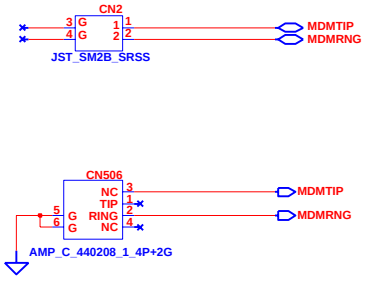

RJ11 CONN

CHANGE by	RDEE3	29-Apr-2004	

INVENTEC

TITLE: *Cricket 5.0*
MDC I/F & RJ11

SIZE	CODE	DOC. NUMBER	REV
A3	CS	QC5420	X01

SHEET 44 OF 57

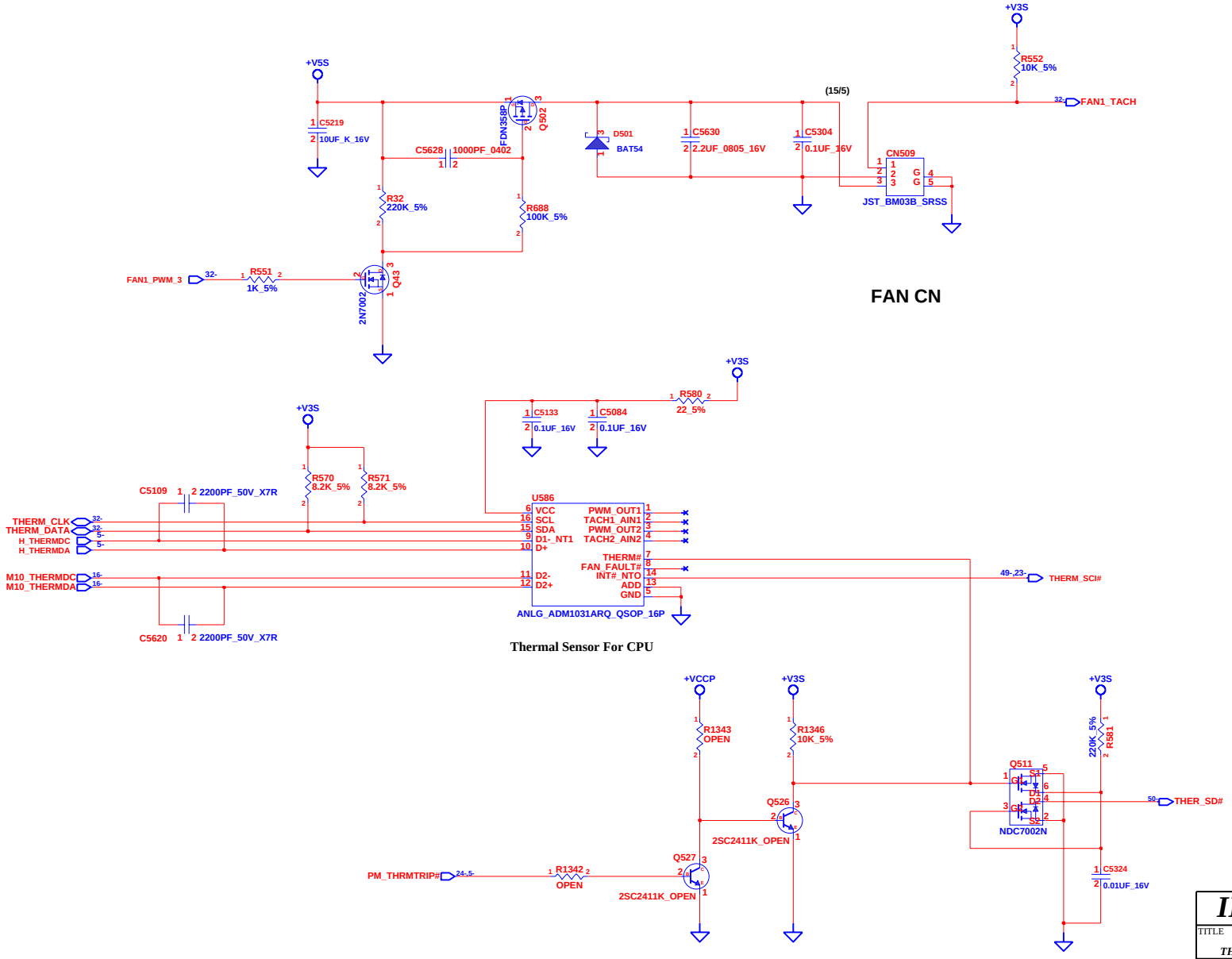

INVENTEC

TITLE **Cricket 5.0**

THERMAL SENSOR & FAN CONTROLLER

SIZE	CODE	DOC. NUMBER	REV
A3	CS	QC5420	X01

SHEET 45 OF 57

CHANGE by	RDEE3	20-May-2004

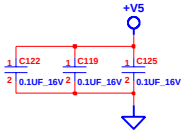

DECOPULING CAPACITORS FOR EMI

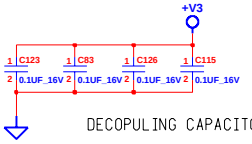

DECOPULING CAPACITORS FOR EMI

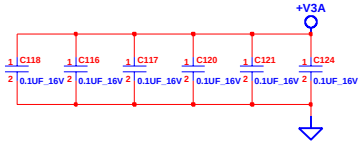

DECOPULING CAPACITORS FOR EMI

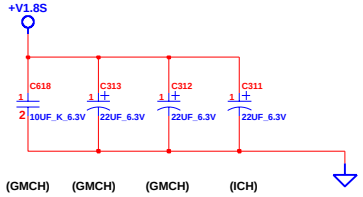

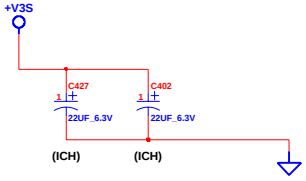

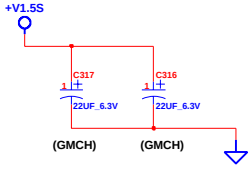

CHANGE by	RDEE3	29-Apr-2004	

INVENTEC

TITLE **Cricket 5.0**
DECOUPLING CAPS

SIZE	CODE	DOC. NUMBER	REV
A3	CS	QC5420	X01

SHEET 46 OF 57

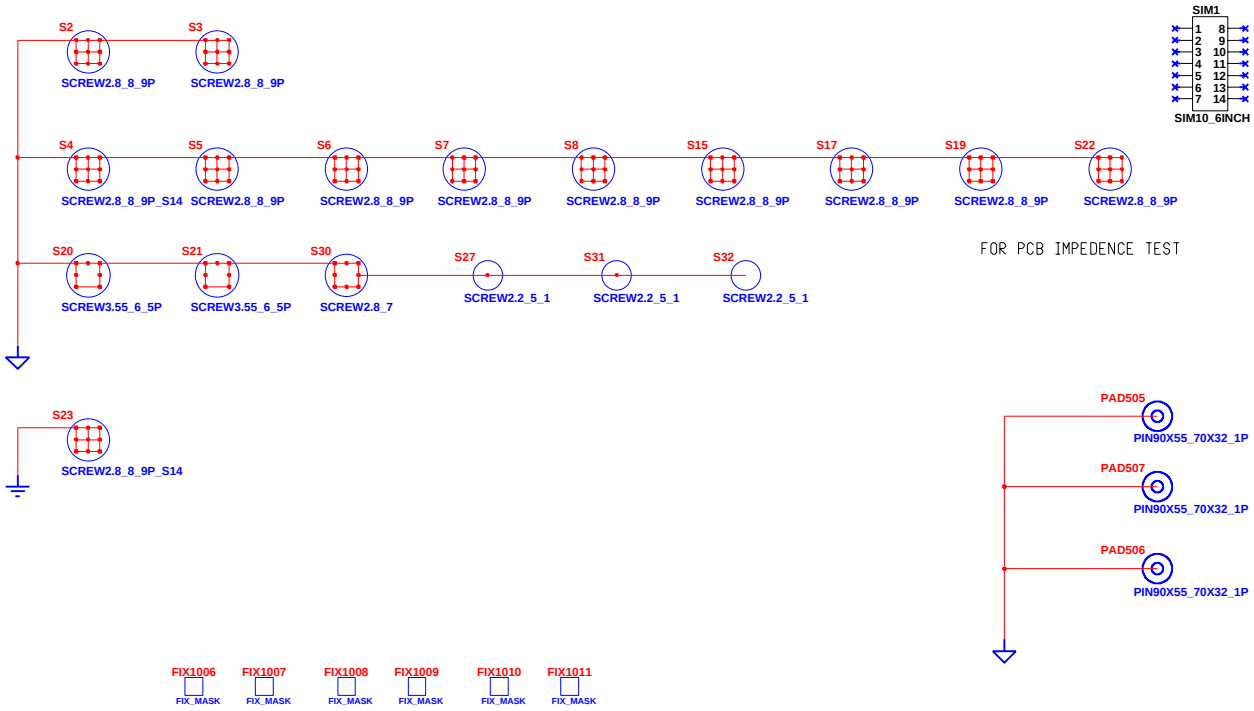

CHANGE by	RDEE3	29-Apr-2004	

INVENTEC

TITLE **Cricket 5.0**
Drill Hole

SIZE	CODE	DOC. NUMBER	REV
A3	CS	QC5420	X01

SHEET 47 OF 57

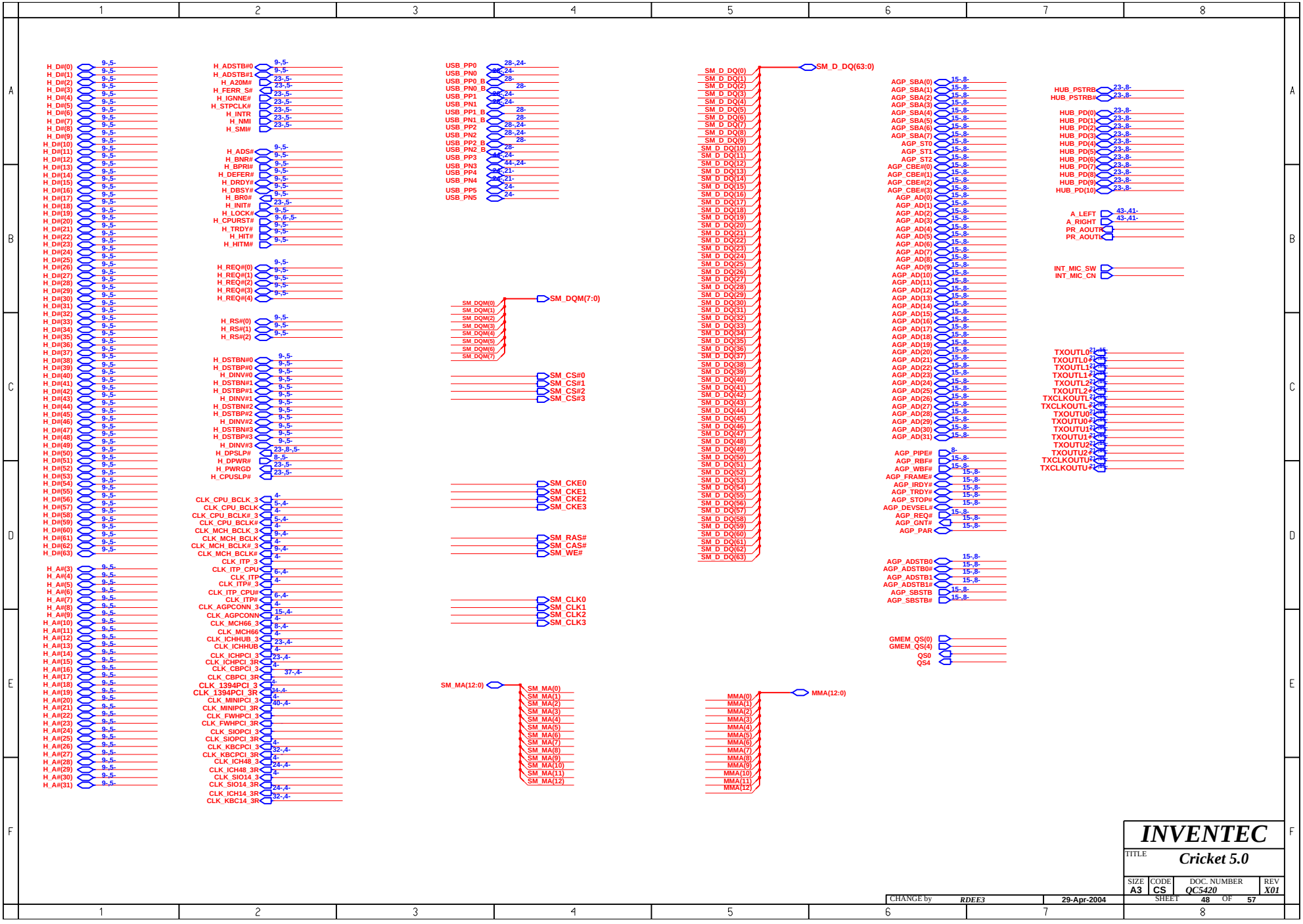
H_D#(0) 9-,5-
H_D#(1) 9-,5-
H_D#(2) 9-,5-
H_D#(3) 9-,5-
H_D#(4) 9-,5-
H_D#(5) 9-,5-
H_D#(6) 9-,5-
H_D#(7) 9-,5-
H_D#(8) 9-,5-
H_D#(9) 9-,5-
H_D#(10) 9-,5-
H_D#(11) 9-,5-
H_D#(12) 9-,5-
H_D#(13) 9-,5-
H_D#(14) 9-,5-
H_D#(15) 9-,5-
H_D#(16) 9-,5-
H_D#(17) 9-,5-
H_D#(18) 9-,5-
H_D#(19) 9-,5-
H_D#(20) 9-,5-
H_D#(21) 9-,5-
H_D#(22) 9-,5-
H_D#(23) 9-,5-
H_D#(24) 9-,5-
H_D#(25) 9-,5-
H_D#(26) 9-,5-
H_D#(27) 9-,5-
H_D#(28) 9-,5-
H_D#(29) 9-,5-
H_D#(30) 9-,5-
H_D#(31) 9-,5-
H_D#(32) 9-,5-
H_D#(33) 9-,5-
H_D#(34) 9-,5-
H_D#(35) 9-,5-
H_D#(36) 9-,5-
H_D#(37) 9-,5-
H_D#(38) 9-,5-
H_D#(39) 9-,5-
H_D#(40) 9-,5-
H_D#(41) 9-,5-
H_D#(42) 9-,5-
H_D#(43) 9-,5-
H_D#(44) 9-,5-
H_D#(45) 9-,5-
H_D#(46) 9-,5-
H_D#(47) 9-,5-
H_D#(48) 9-,5-
H_D#(49) 9-,5-
H_D#(50) 9-,5-
H_D#(51) 9-,5-
H_D#(52) 9-,5-
H_D#(53) 9-,5-
H_D#(54) 9-,5-
H_D#(55) 9-,5-
H_D#(56) 9-,5-
H_D#(57) 9-,5-
H_D#(58) 9-,5-
H_D#(59) 9-,5-
H_D#(60) 9-,5-
H_D#(61) 9-,5-
H_D#(62) 9-,5-
H_D#(63) 9-,5-
H_A#(3) 9-,5-
H_A#(4) 9-,5-
H_A#(5) 9-,5-
H_A#(6) 9-,5-
H_A#(7) 9-,5-
H_A#(8) 9-,5-
H_A#(9) 9-,5-
H_A#(10) 9-,5-
H_A#(11) 9-,5-
H_A#(12) 9-,5-
H_A#(13) 9-,5-
H_A#(14) 9-,5-
H_A#(15) 9-,5-
H_A#(16) 9-,5-
H_A#(17) 9-,5-
H_A#(18) 9-,5-
H_A#(19) 9-,5-
H_A#(20) 9-,5-
H_A#(21) 9-,5-
H_A#(22) 9-,5-
H_A#(23) 9-,5-
H_A#(24) 9-,5-
H_A#(25) 9-,5-
H_A#(26) 9-,5-
H_A#(27) 9-,5-
H_A#(28) 9-,5-
H_A#(29) 9-,5-
H_A#(30) 9-,5-
H_A#(31) 9-,5-
H_ADSTB#0 9-,5-
H_ADSTB#1 9-,5-
H_A20M# 23-,5-
H_FERR_S# 23-,5-
H_IGNNE# 23-,5-
H_STPCLK# 23-,5-
H_INTR 23-,5-
H_NMI 23-,5-
H_SMI# 23-,5-
H_ADS# 9-,5-
H_BNR# 9-,5-
H_BPRI# 9-,5-
H_DEFER# 9-,5-
H_DRDY# 9-,5-
H_DBSY# 9-,5-
H_BR0# 9-,5-
H_INIT# 23-,5-
H_LOCK# 9-,5-
H_CPURST# 9-,6-,5-
H_TRDY# 9-,5-
H_HIT# 9-,5-
H_HITM# 9-,5-
H_REQ#(0) 9-,5-
H_REQ#(1) 9-,5-
H_REQ#(2) 9-,5-
H_REQ#(3) 9-,5-
H_REQ#(4) 9-,5-
H_RS#(0) 9-,5-
H_RS#(1) 9-,5-
H_RS#(2) 9-,5-
H_DSTBN#0 9-,5-
H_DSTBP#0 9-,5-
H_DINV#0 9-,5-
H_DSTBN#1 9-,5-
H_DSTBP#1 9-,5-
H_DINV#1 9-,5-
H_DSTBN#2 9-,5-
H_DSTBP#2 9-,5-
H_DINV#2 9-,5-
H_DSTBN#3 9-,5-
H_DSTBP#3 9-,5-
H_DINV#3 9-,5-
H_DPSLP# 23-,8-,5-
H_DPWR# 8-,5-
H_PWRGD 23-,5-
H_CPUSLP# 23-,5-
CLK_CPU_BCLK_3 4-
CLK_CPU_BCLK 5-,4-
CLK_CPU_BCLK# 3 4-
CLK_CPU_BCLK# 5-,4-
CLK_MCH_BCLK_3 4-
CLK_MCH_BCLK 9-,4-
CLK_MCH_BCLK#_3 4-
CLK_MCH_BCLK# 9-,4-
CLK_ITP_3 4-
CLK_ITP_CPU 6-,4-
CLK_ITP 4-
CLK_ITP#_3 4-
CLK_ITP_CPU# 6-,4-
CLK_ITP# 4-
CLK_AGPCONN_3 15-,4-
CLK_AGPCONN 4-
CLK_MCH66_3 8-,4-
CLK_MCH66 4-
CLK_ICHHUB_3 23-,4-
CLK_ICHHUB 4-
CLK_ICHPCI_3 23-,4-
CLK_ICHPCI_3R 4-
CLK_CBPCI_3 37-,4-
CLK_CBPCI_3R 4-
CLK_1394PCI_3 34-,4-
CLK_1394PCI_3R 4-
CLK_MINIPCI_3 40-,4-
CLK_MINIPCI_3R
CLK_FWHPCI_3
CLK_FWHPCI_3R
CLK_SIOPCI_3
CLK_SIOPCI_3R 4-
CLK_KBCPCI_3 32-,4-
CLK_KBCPCI_3R 4-
CLK_ICH48_3 24-,4-
CLK_ICH48_3R 4-
CLK_SIO14_3
CLK_SIO14_3R 24-,4-
CLK_ICH14_3R 32-,4-
CLK_KBC14_3R
USB_PP0 28-,24-
USB_PN0 24-
USB_PP0_B 28-
USB_PN0_B 28-
USB_PP1 24-
USB_PN1 24-
USB_PP1_B 28-
USB_PN1_B 28-
USB_PP2 28-,24-
USB_PN2 28-,24-
USB_PP2_B 28-
USB_PN2_B 24-
USB_PP3 44-,24-
USB_PN3 24-,21-
USB_PP4 24-,21-
USB_PN4 24-
USB_PP5 24-
USB_PN5
SM_DQM(0)
SM_DQM(1)
SM_DQM(2)
SM_DQM(3)
SM_DQM(4)
SM_DQM(5)
SM_DQM(6)
SM_DQM(7)
SM_DQM(7:0)
SM_CS#0
SM_CS#1
SM_CS#2
SM_CS#3
SM_CKE0
SM_CKE1
SM_CKE2
SM_CKE3
SM_RAS#
SM_CAS#
SM_WE#
SM_CLK0
SM_CLK1
SM_CLK2
SM_CLK3
SM_MA(12:0)
SM_MA(0)
SM_MA(1)
SM_MA(2)
SM_MA(3)
SM_MA(4)
SM_MA(5)
SM_MA(6)
SM_MA(7)
SM_MA(8)
SM_MA(9)
SM_MA(10)
SM_MA(11)
SM_MA(12)
SM_D_DQ(0)
SM_D_DQ(1)
SM_D_DQ(2)
SM_D_DQ(3)
SM_D_DQ(4)
SM_D_DQ(5)
SM_D_DQ(6)
SM_D_DQ(7)
SM_D_DQ(8)
SM_D_DQ(9)
SM_D_DQ(10)
SM_D_DQ(11)
SM_D_DQ(12)
SM_D_DQ(13)
SM_D_DQ(14)
SM_D_DQ(15)
SM_D_DQ(16)
SM_D_DQ(17)
SM_D_DQ(18)
SM_D_DQ(19)
SM_D_DQ(20)
SM_D_DQ(21)
SM_D_DQ(22)
SM_D_DQ(23)
SM_D_DQ(24)
SM_D_DQ(25)
SM_D_DQ(26)
SM_D_DQ(27)
SM_D_DQ(28)
SM_D_DQ(29)
SM_D_DQ(30)
SM_D_DQ(31)
SM_D_DQ(32)
SM_D_DQ(33)
SM_D_DQ(34)
SM_D_DQ(35)
SM_D_DQ(36)
SM_D_DQ(37)
SM_D_DQ(38)
SM_D_DQ(39)
SM_D_DQ(40)
SM_D_DQ(41)
SM_D_DQ(42)
SM_D_DQ(43)
SM_D_DQ(44)
SM_D_DQ(45)
SM_D_DQ(46)
SM_D_DQ(47)
SM_D_DQ(48)
SM_D_DQ(49)
SM_D_DQ(50)
SM_D_DQ(51)
SM_D_DQ(52)
SM_D_DQ(53)
SM_D_DQ(54)
SM_D_DQ(55)
SM_D_DQ(56)
SM_D_DQ(57)
SM_D_DQ(58)
SM_D_DQ(59)
SM_D_DQ(60)
SM_D_DQ(61)
SM_D_DQ(62)
SM_D_DQ(63)
SM_D_DQ(63:0)
MMA(0)
MMA(1)
MMA(2)
MMA(3)
MMA(4)
MMA(5)
MMA(6)
MMA(7)
MMA(8)
MMA(9)
MMA(10)
MMA(11)
MMA(12)
MMA(12:0)
AGP_SBA(0) 15-,8-
AGP_SBA(1) 15-,8-
AGP_SBA(2) 15-,8-
AGP_SBA(3) 15-,8-
AGP_SBA(4) 15-,8-
AGP_SBA(5) 15-,8-
AGP_SBA(6) 15-,8-
AGP_SBA(7) 15-,8-
AGP_ST0 15-,8-
AGP_ST1 15-,8-
AGP_ST2 15-,8-
AGP_CBE#(0) 15-,8-
AGP_CBE#(1) 15-,8-
AGP_CBE#(2) 15-,8-
AGP_CBE#(3) 15-,8-
AGP_AD(0) 15-,8-
AGP_AD(1) 15-,8-
AGP_AD(2) 15-,8-
AGP_AD(3) 15-,8-
AGP_AD(4) 15-,8-
AGP_AD(5) 15-,8-
AGP_AD(6) 15-,8-
AGP_AD(7) 15-,8-
AGP_AD(8) 15-,8-
AGP_AD(9) 15-,8-
AGP_AD(10) 15-,8-
AGP_AD(11) 15-,8-
AGP_AD(12) 15-,8-
AGP_AD(13) 15-,8-
AGP_AD(14) 15-,8-
AGP_AD(15) 15-,8-
AGP_AD(16) 15-,8-
AGP_AD(17) 15-,8-
AGP_AD(18) 15-,8-
AGP_AD(19) 15-,8-
AGP_AD(20) 15-,8-
AGP_AD(21) 15-,8-
AGP_AD(22) 15-,8-
AGP_AD(23) 15-,8-
AGP_AD(24) 15-,8-
AGP_AD(25) 15-,8-
AGP_AD(26) 15-,8-
AGP_AD(27) 15-,8-
AGP_AD(28) 15-,8-
AGP_AD(29) 15-,8-
AGP_AD(30) 15-,8-
AGP_AD(31) 15-,8-
AGP_PIPE# 8-
AGP_RBF# 15-,8-
AGP_WBF# 15-,8-
AGP_FRAME# 15-,8-
AGP_IRDY# 15-,8-
AGP_TRDY# 15-,8-
AGP_STOP# 15-,8-
AGP_DEVSEL# 15-,8-
AGP_REQ# 15-,8-
AGP_GNT# 15-,8-
AGP_PAR 15-,8-
AGP_ADSTB0 15-,8-
AGP_ADSTB0# 15-,8-
AGP_ADSTB1 15-,8-
AGP_ADSTB1# 15-,8-
AGP_SBSTB 15-,8-
AGP_SBSTB# 15-,8-
GMEM_QS(0)
GMEM_QS(4)
QS0
QS4
HUB_PSTRB 23-,8-
HUB_PSTRB# 23-,8-
HUB_PD(0) 23-,8-
HUB_PD(1) 23-,8-
HUB_PD(2) 23-,8-
HUB_PD(3) 23-,8-
HUB_PD(4) 23-,8-
HUB_PD(5) 23-,8-
HUB_PD(6) 23-,8-
HUB_PD(7) 23-,8-
HUB_PD(8) 23-,8-
HUB_PD(9) 23-,8-
HUB_PD(10) 23-,8-
A_LEFT 43-,41-
A_RIGHT 43-,41-
PR_AOUTR
PR_AOUTL
INT_MIC_SW
INT_MIC_CN
TXOUTL0# 21-,15-
TXOUTL0 21-,15-
TXOUTL1# 21-,15-
TXOUTL1 21-,15-
TXOUTL2# 21-,15-
TXOUTL2 21-,15-
TXCLKOUTL# 21-,15-
TXCLKOUTL 21-,15-
TXOUTU0# 21-,15-
TXOUTU0 21-,15-
TXOUTU1# 21-,15-
TXOUTU1 21-,15-
TXOUTU2# 21-,15-
TXOUTU2 21-,15-
TXCLKOUTU# 21-,15-
TXCLKOUTU 21-,15-
INVENTEC
TITLE Cricket 5.0
SIZE A3
CODE CS
DOC. NUMBER QC5420
REV X01
SHEET 48 OF 57
CHANGE by RDEE3
29-Apr-2004

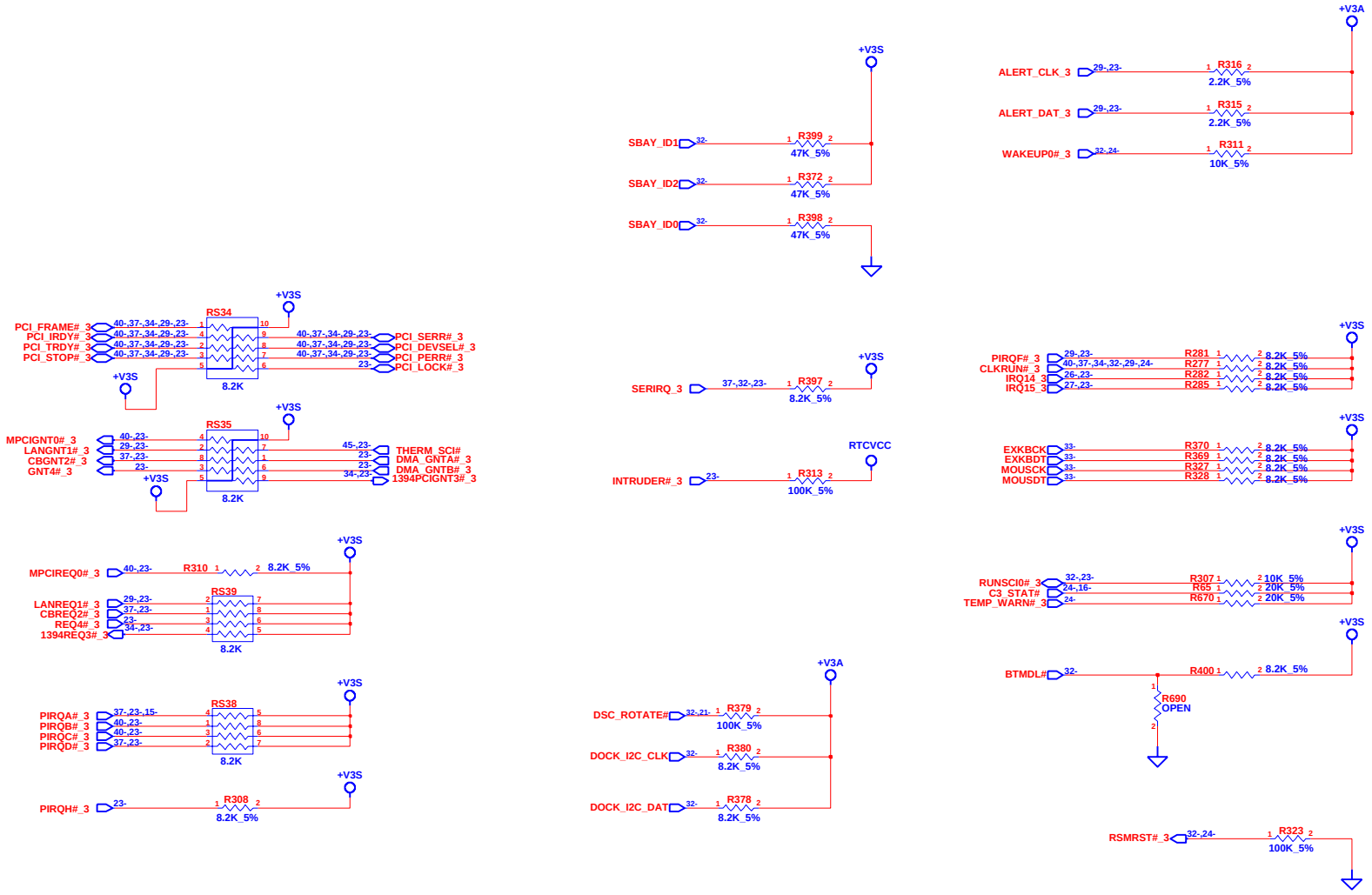

CHANGE by	RDEE3	29-Apr-2004	

INVENTEC

TITLE: *Cricket 5.0*

Pull Ups

SIZE	CODE	DOC. NUMBER	REV
A3	CS	QC5420	X01

SHEET 49 OF 57

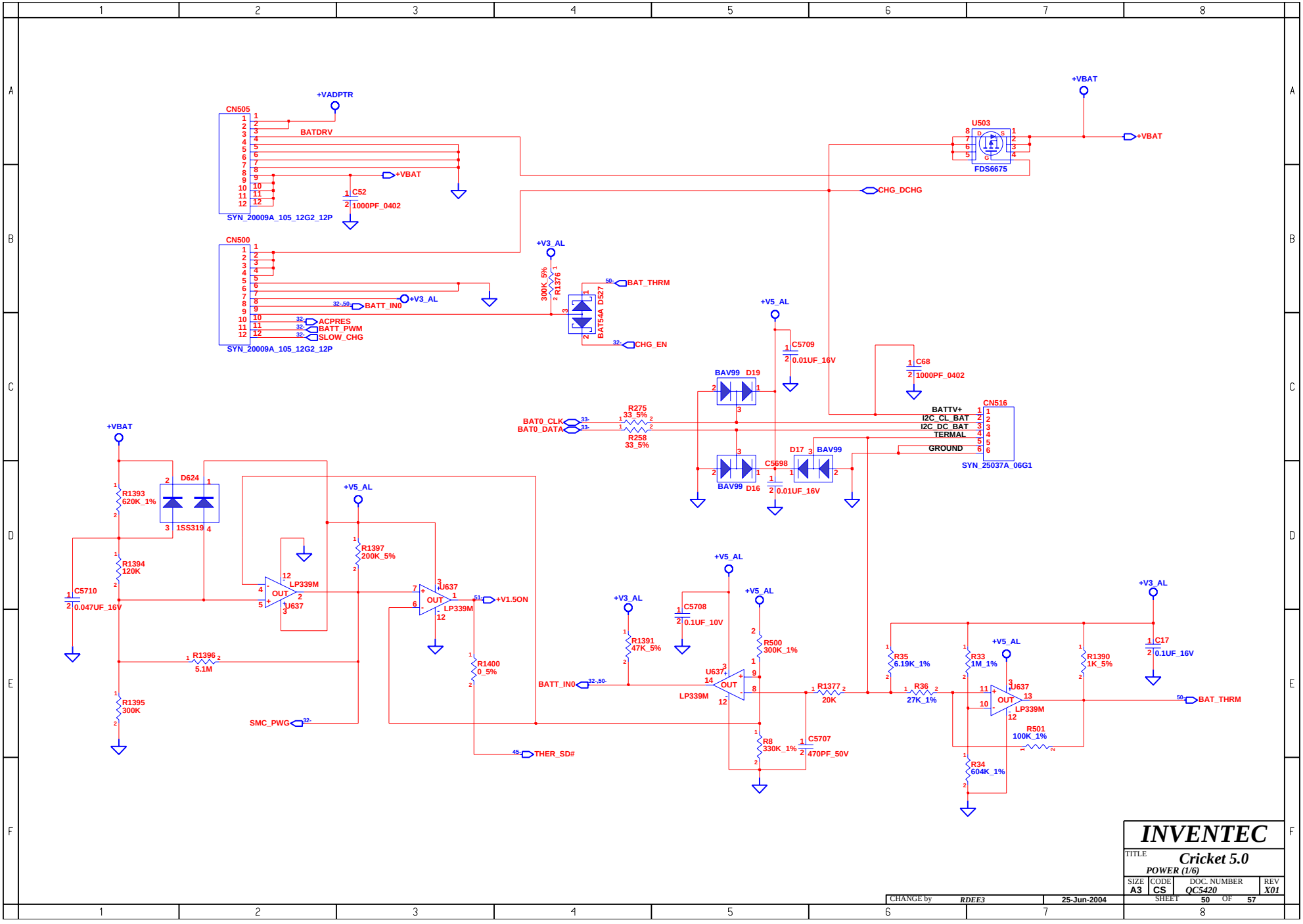
CN505
SYN_20009A_105_12G2_12P
+VADPTR
BATDRV
+VBAT
C52
1000PF_0402
CN500
SYN_20009A_105_12G2_12P
+V3_AL
BATT_IN0
ACPRES
BATT_PWM
SLOW_CHG
R1376
300K_5%
D527
BAT54A
BAT_THRM
CHG_EN
U503
FDS6675
CHG_DCHG
+VBAT
+V5_AL
C5709
0.01UF_16V
C68
1000PF_0402
BAV99 D19
BAV99 D16
D17 BAV99
C5698
0.01UF_16V
R275
33_5%
R258
33_5%
BAT0_CLK
BAT0_DATA
CN516
SYN_25037A_06G1
BATTV+
I2C_CL_BAT
I2C_DC_BAT
TERMAL
GROUND
D624
1SS319
R1393
620K_1%
R1394
120K
C5710
0.047UF_16V
R1396
5.1M
R1395
300K
LP339M
U637
R1397
200K_5%
+V1.5ON
R1400
0_5%
SMC_PWG
THER_SD#
C5708
0.1UF_10V
R1391
47K_5%
R500
300K_1%
R1377
20K
R8
330K_1%
C5707
470PF_50V
R35
6.19K_1%
R33
1M_1%
R36
27K_1%
R34
604K_1%
R501
100K_1%
R1390
1K_5%
C17
0.1UF_16V
INVENTEC
TITLE
Cricket 5.0
POWER (1/6)
SIZE A3
CODE CS
DOC. NUMBER QC5420
REV X01
SHEET 50 OF 57
CHANGE by RDEE3
25-Jun-2004

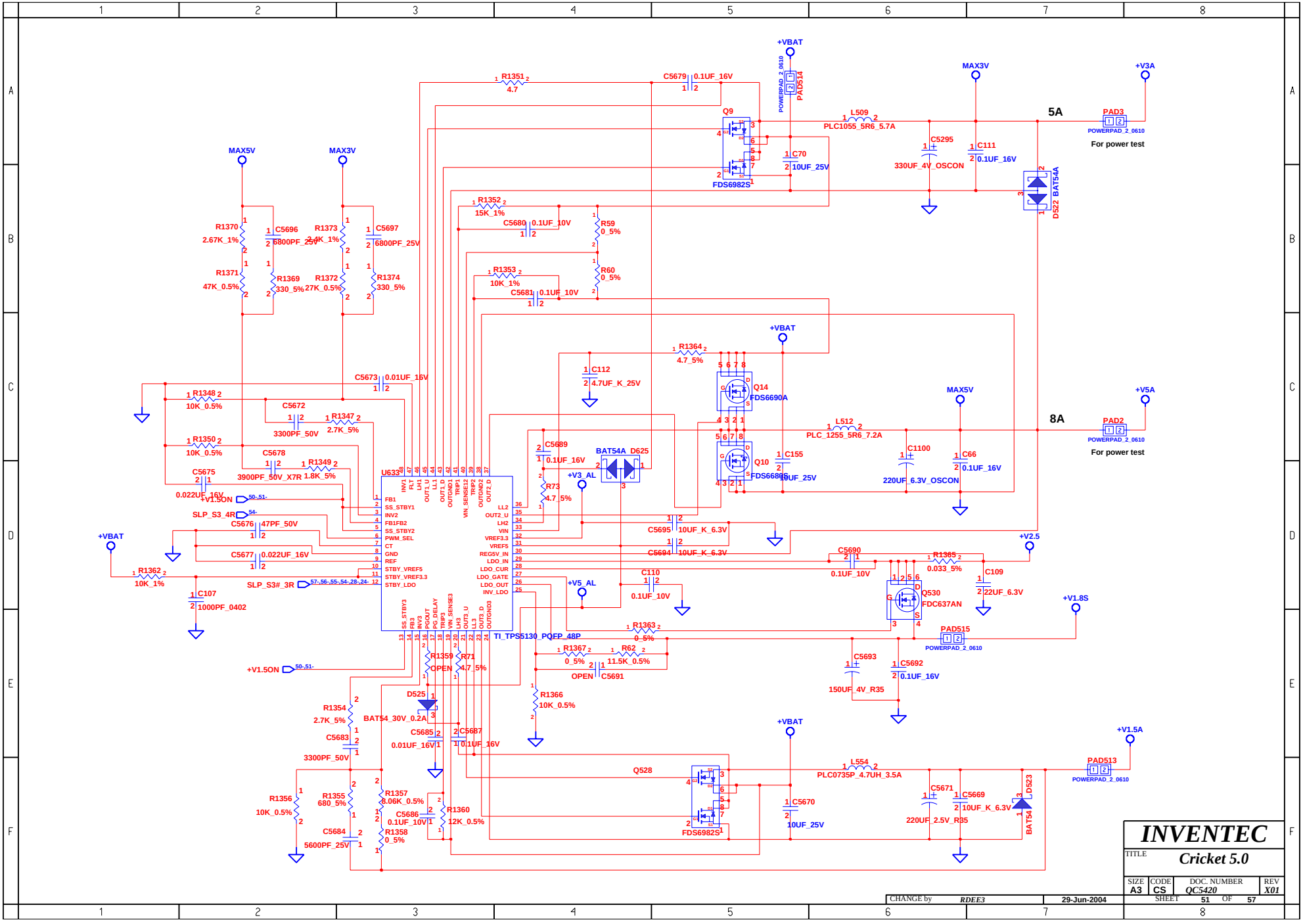
+VBAT
MAX3V
+V3A
5A
PAD3
POWERPAD_2_0610
For power test
PAD514
POWERPAD_2_0610
Q9
FDS6982S
L509
PLC1055_5R6_5.7A
C5679 0.1UF_16V
R1351 4.7
C70 10UF_25V
C5295 330UF_4V_OSCON
C111 0.1UF_16V
D522 BAT54A
MAX5V
R1370 2.67K_1%
C5696 6800PF_25V
R1371 47K_0.5%
R1369 330_5%
R1373 2.4K_1%
C5697 6800PF_25V
R1372 27K_0.5%
R1374 330_5%
R1352 15K_1%
C5680 0.1UF_10V
R59 0_5%
R60 0_5%
R1353 10K_1%
C5681 0.1UF_10V
R1364 4.7_5%
C112 4.7UF_K_25V
Q14 FDS6690A
Q10 FDS6690A
L512 PLC_1255_5R6_7.2A
8A
PAD2
POWERPAD_2_0610
For power test
+V5A
C1100 220UF_6.3V_OSCON
C66 0.1UF_16V
C155 10UF_25V
C5673 0.01UF_16V
R1348 10K_0.5%
C5672 3300PF_50V
R1347 2.7K_5%
R1350 10K_0.5%
C5678 3900PF_50V_X7R
R1349 1.8K_5%
C5675 0.022UF_16V
+V1.5ON
SLP_S3_4R
C5676 47PF_50V
C5677 0.022UF_16V
SLP_S3#_3R
R1362 10K_1%
C107 1000PF_0402
U633
TI_TPS5130_PQFP_48P
C5689 0.1UF_16V
BAT54A_D625
+V3_AL
R73 4.7_5%
C5695 10UF_K_6.3V
C5694 10UF_K_6.3V
C110 0.1UF_10V
+V5_AL
C5690 0.1UF_10V
R1365 0.033_5%
C109 22UF_6.3V
Q530 FDC637AN
+V2.5
+V1.8S
PAD515
POWERPAD_2_0610
R1363 0_5%
R1367 0_5%
R62 11.5K_0.5%
OPEN
C5691
C5693 150UF_4V_R35
C5692 0.1UF_16V
R1359 OPEN
R71 4.7_5%
R1366 10K_0.5%
D525 BAT54_30V_0.2A
R1354 2.7K_5%
C5683 3300PF_50V
C5685 0.01UF_16V
C5687 0.1UF_16V
Q528
FDS6982S
L554 PLC0735P_4.7UH_3.5A
+V1.5A
PAD513
POWERPAD_2_0610
C5670 10UF_25V
C5671 220UF_2.5V_R35
C5669 10UF_K_6.3V
D523 BAT54
R1356 10K_0.5%
R1355 680_5%
R1357 6.06K_0.5%
C5686 0.1UF_10V
R1360 12K_0.5%
C5684 5600PF_25V
R1358 0_5%
INVENTEC
TITLE Cricket 5.0
SIZE A3
CODE CS
DOC. NUMBER QC5420
REV X01
SHEET 51 OF 57
CHANGE by RDEE3
29-Jun-2004

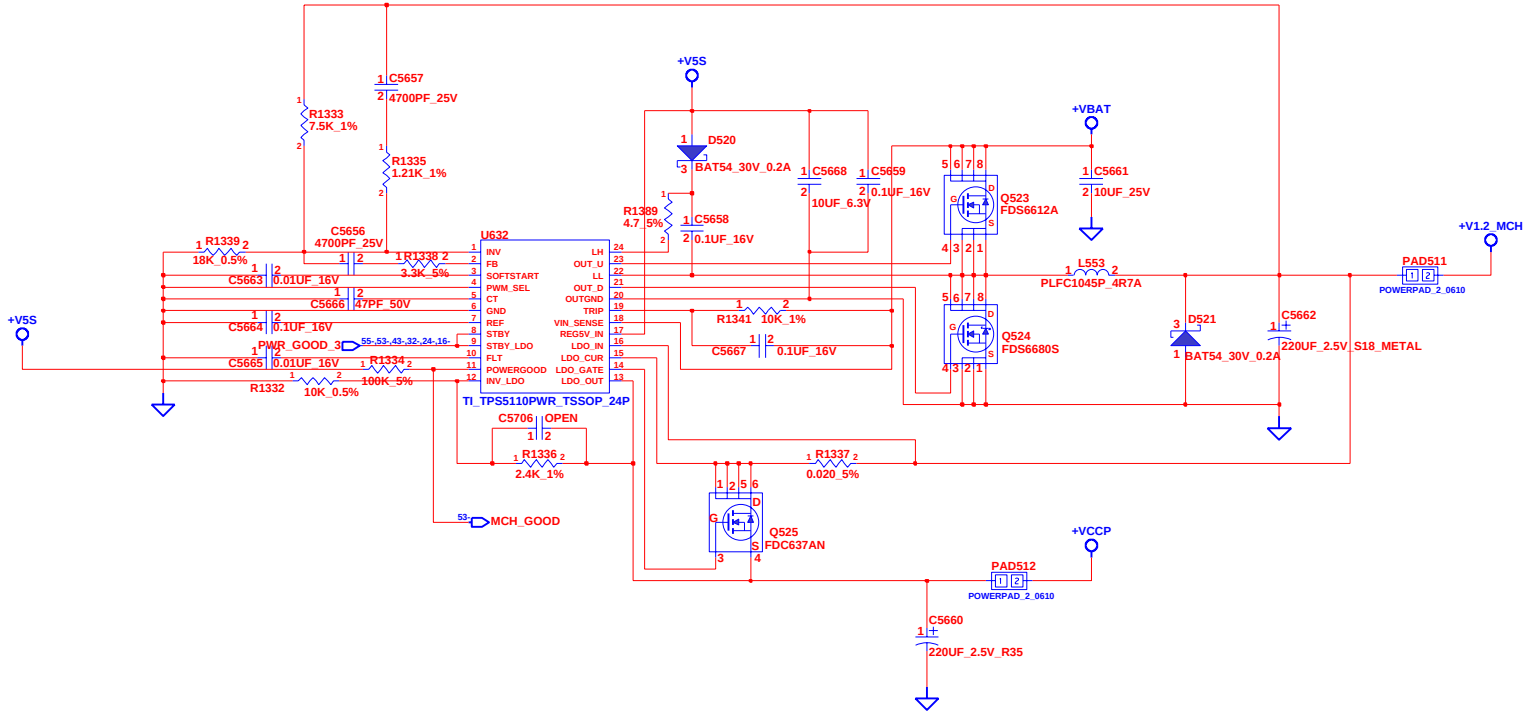

CHANGE by	RDEE3	19-May-2004	

INVENTEC

TITLE **Cricket 5.0**

SIZE	CODE	DOC. NUMBER	REV
A3	CS	QC5420	X01

SHEET 52 OF 57

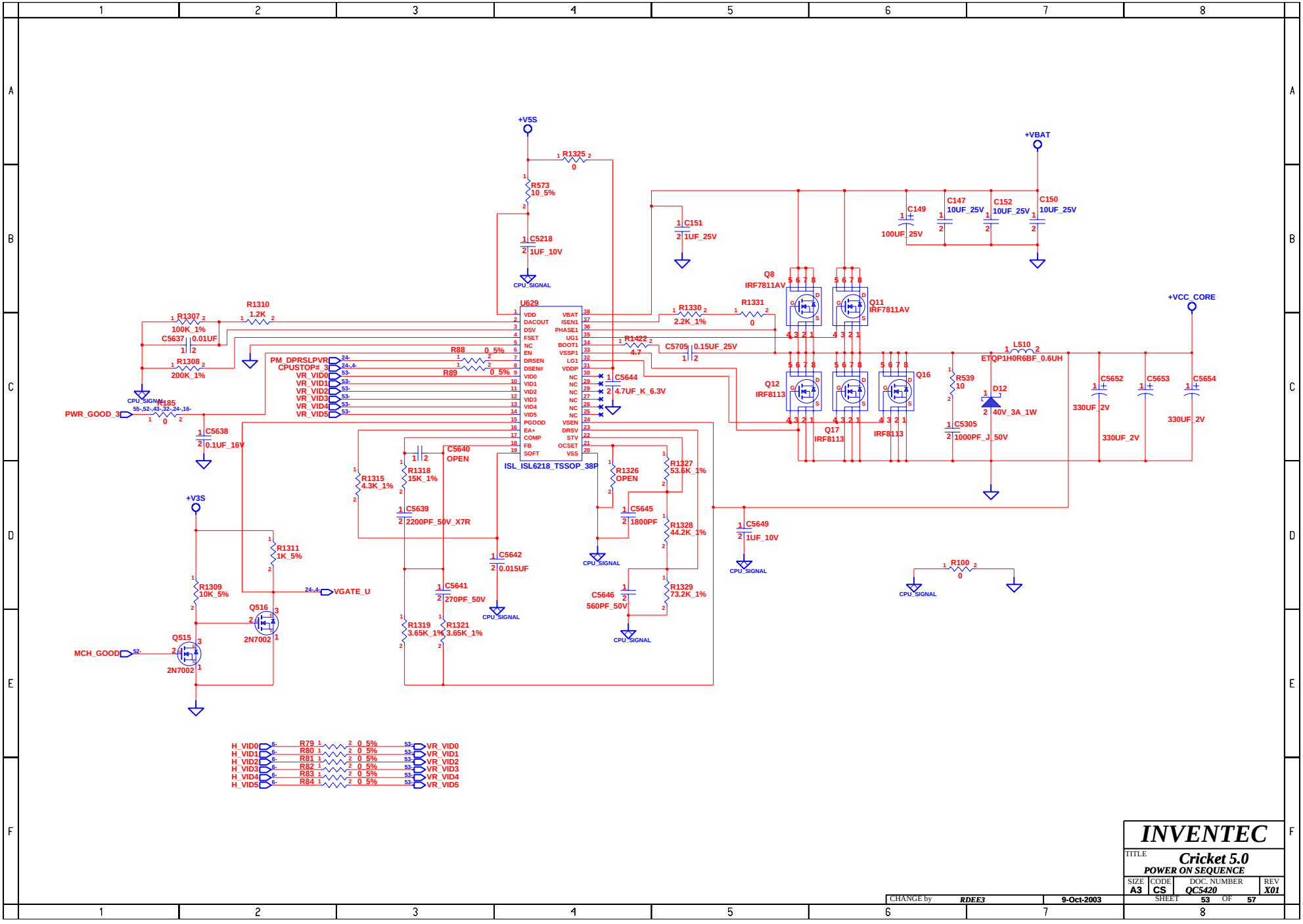

INVENTEC

TITLE: Cricket 5.0
POWER ON SEQUENCE

SIZE	CODE	DOC. NUMBER	REV
A3	CS	QC5420	X01

CHANGE by RDEE3 9-Oct-2003

SHEET 53 OF 57

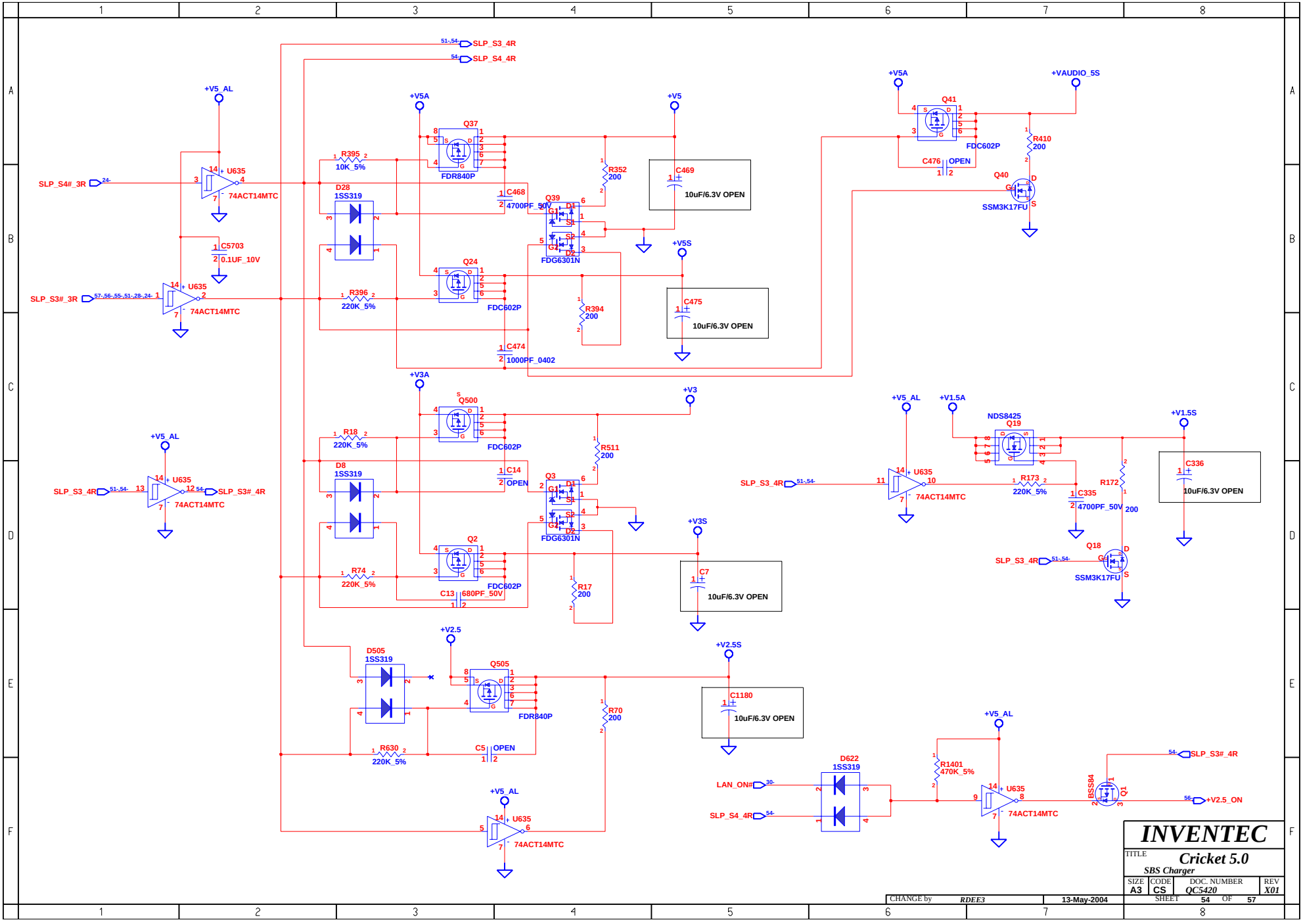
SLP_S3_4R
SLP_S4_4R
+V5_AL
+V5A
+V5
+V5S
+VAUDIO_5S
SLP_S4#_3R
SLP_S3#_3R
U635
74ACT14MTC
C5703
0.1UF_10V
R395
10K_5%
R396
220K_5%
D28
1SS319
Q37
FDR840P
Q24
FDC602P
C468
4700PF_50V
Q39
FDG6301N
R352
200
R394
200
C469
10uF/6.3V OPEN
C475
10uF/6.3V OPEN
C474
1000PF_0402
Q41
FDC602P
C476
OPEN
R410
200
Q40
SSM3K17FU
+V3A
+V3
+V3S
Q500
FDC602P
R18
220K_5%
D8
1SS319
C14
OPEN
Q3
FDG6301N
R511
200
Q2
FDC602P
R74
220K_5%
C13
680PF_50V
R17
200
C7
10uF/6.3V OPEN
+V1.5A
+V1.5S
NDS8425
Q19
R173
220K_5%
C335
4700PF_50V
R172
200
C336
10uF/6.3V OPEN
Q18
SSM3K17FU
+V2.5
+V2.5S
D505
1SS319
Q505
FDR840P
R630
220K_5%
C5
OPEN
R70
200
C1180
10uF/6.3V OPEN
LAN_ON#
D622
1SS319
R1401
470K_5%
BSS84
Q1
+V2.5_ON
INVENTEC
TITLE
Cricket 5.0
SBS Charger
SIZE A3
CODE CS
DOC. NUMBER QC5420
REV X01
CHANGE by RDEE3
13-May-2004
SHEET 54 OF 57

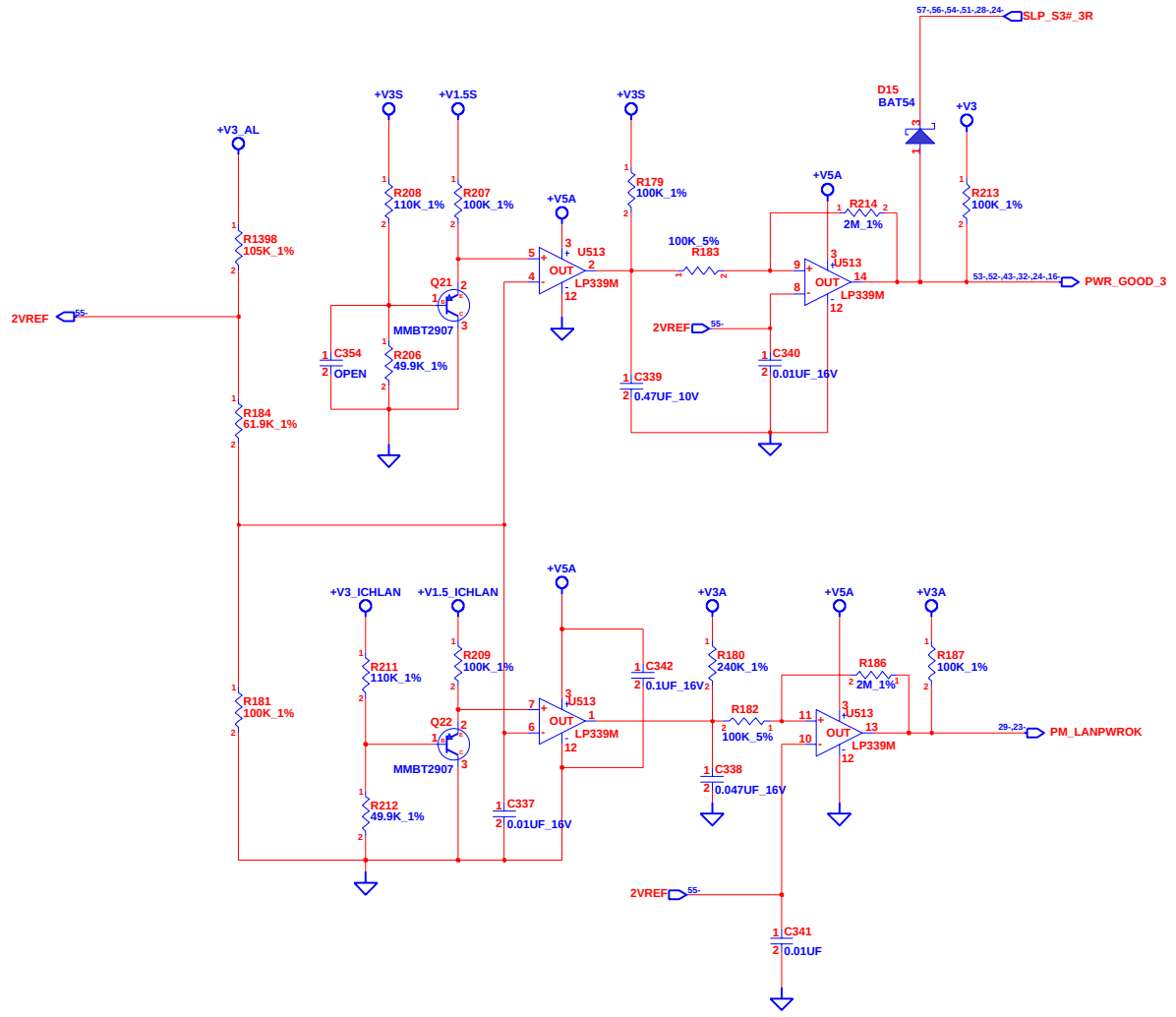

INVENTEC			
TITLE	Cricket 5.0		
SIZE A3	CODE CS	DOC. NUMBER QC5420	REV X01
CHANGE by RDEE3	6-May-2004	SHEET 55 OF 57	

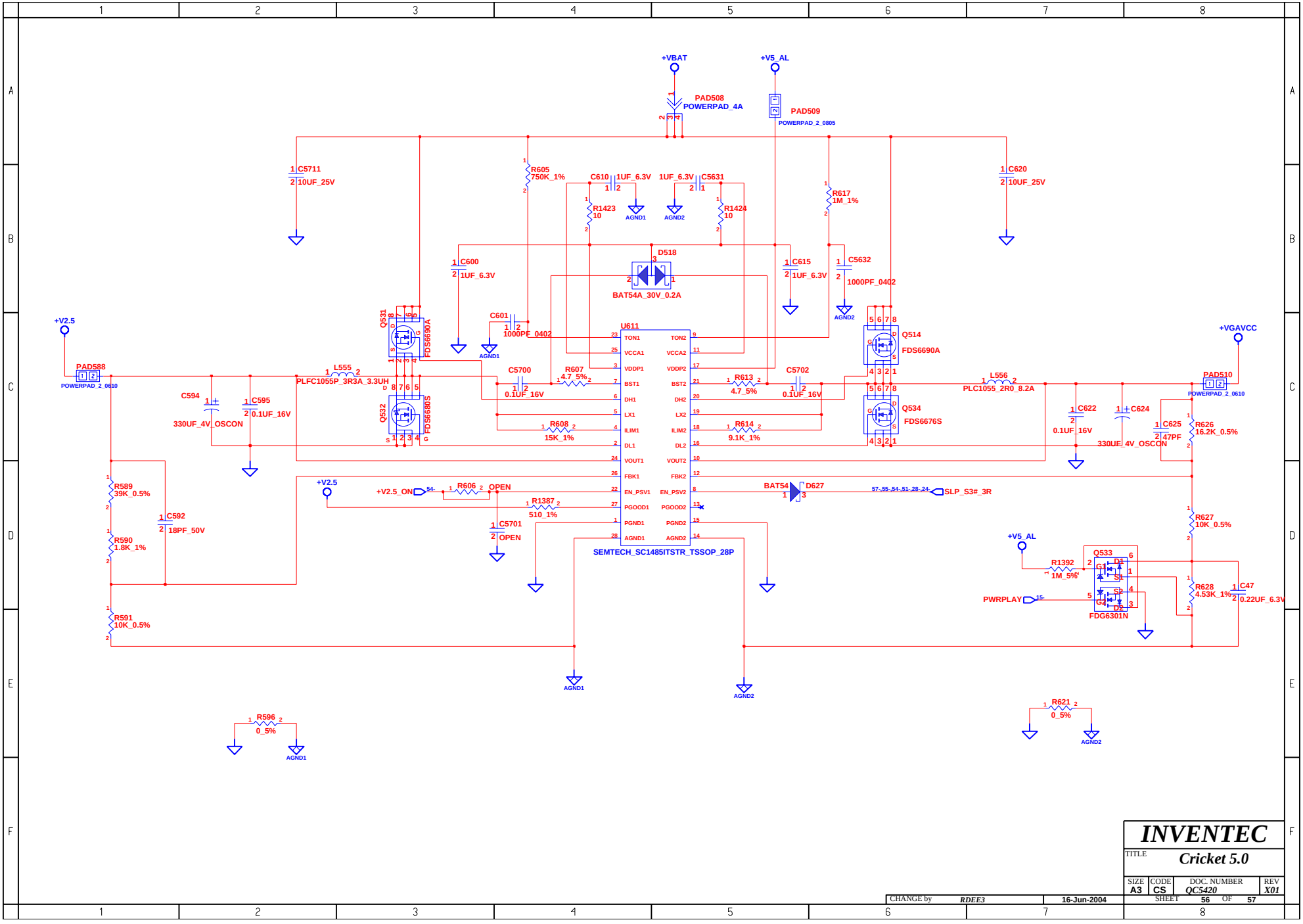

INVENTEC			
TITLE	Cricket 5.0		
SIZE A3	CODE CS	DOC. NUMBER QC5420	REV X01
CHANGE by RDEE3	16-Jun-2004	SHEET 56 OF 57	

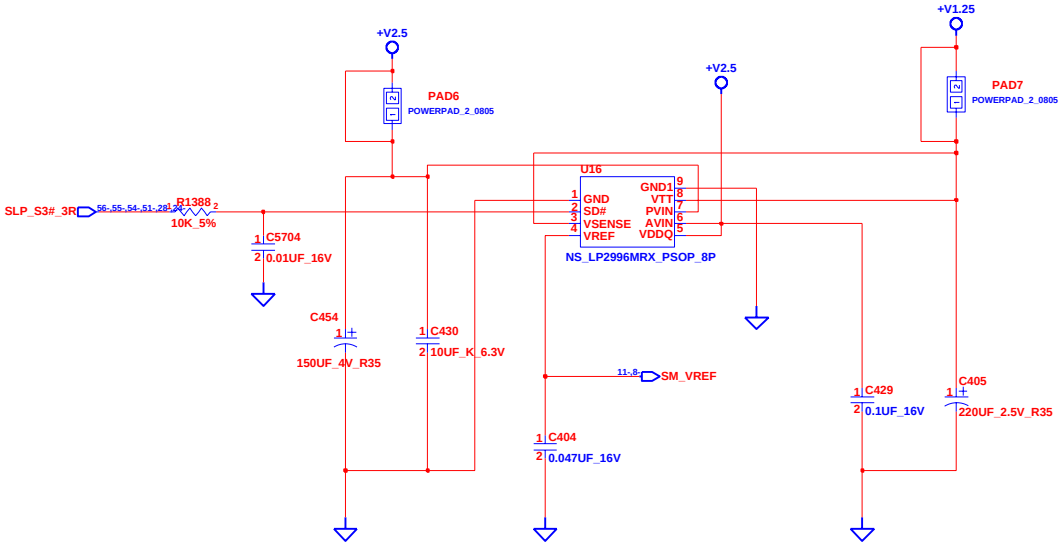

INVENTEC

TITLE **Cricket 5.0**

VIDVCC/1.25V

SIZE	CODE	DOC. NUMBER	REV
A3	CS	QC5420	X01

CHANGE by *RDEE3* 6-May-2004

SHEET 57 OF 57