INVENTEC

Preliminary Test

2008/03/25

DATE	CHANGE NO.	REV

	EE	DATE		DATE
DRAWER			POWER	
DESIGN				
CHECK				

RESPONSIBLE

SIZE = 3 VER :

XXXX-XXXXXX-XX

FILE NAME XXXXXXXXXXXX

INVENTEC

TITLE PT10SC

SIZE	CODE	DOC. NUMBER	REV
A3	CS	*Model_No*	*X01*

SHEET 1 OF 63

TABLE OF CONTENTS

PAGE	PAGE	PAGE
1.COVER PAGE	33. HDMI TRANSMITTER	58.MDC 1.5 CONN
2.INDEX	34.S/B ICH8 1	59.LED(M/B) & HOTKEY/B CONN
3.BLOCK DIAGRAM	35.S/B ICH8 2	60.PICK BUTTON BOARD
4.POWER SEQUENCE BLOCK	36.S/B ICH8 3	61.KILL SWITCH& HALL SENSOR
5-12.SYSTEM POWER	37.S/B ICH8 4	62.DRILL HOLE
13.CLOCK GENERATOR	38.S/B ICH8 5	63.EMI
14.CPU Merom1	40.3 IN 1 CARD SLOT	
15.CPU Merom2	41.CARDBUS CONTROLLER	
16.CPU Merom3	42.PCMCIA CONN	
17.CPU Merom4		
18.FAN & THERMAL CONTROLLER	43.EXPRESS CARD CONN	
19.N/B Crestline 1	44.LAN CONTROLLER	
20.N/B Crestline 2	45.RJ45 & TRANSFORMER	
21.N/B Crestline 3	46.ROBSON & WLAN	
22.N/B Crestline 4	47.SATA HDD1 CONN	
23.N/B Crescline 5	48.CAMERA CONN	
24.N/B Crestline 6	49.ODD CONN	
25.N/B Crestline 7	50.USB CONN	
26.DDR2 DIMM0	51. N/A	
27.DDR2 DIMM1	52.HD_DVD	
28.DDR DAMPING	53.KBC	
29.N/A	54.K/B & TP/B CONN	
30.CRT CONN	55.HDMI CONN	
31.N/A	56.AZALIA CODEC	
32.LCM CONN	57.AUDIO AMP & MIC & HP	

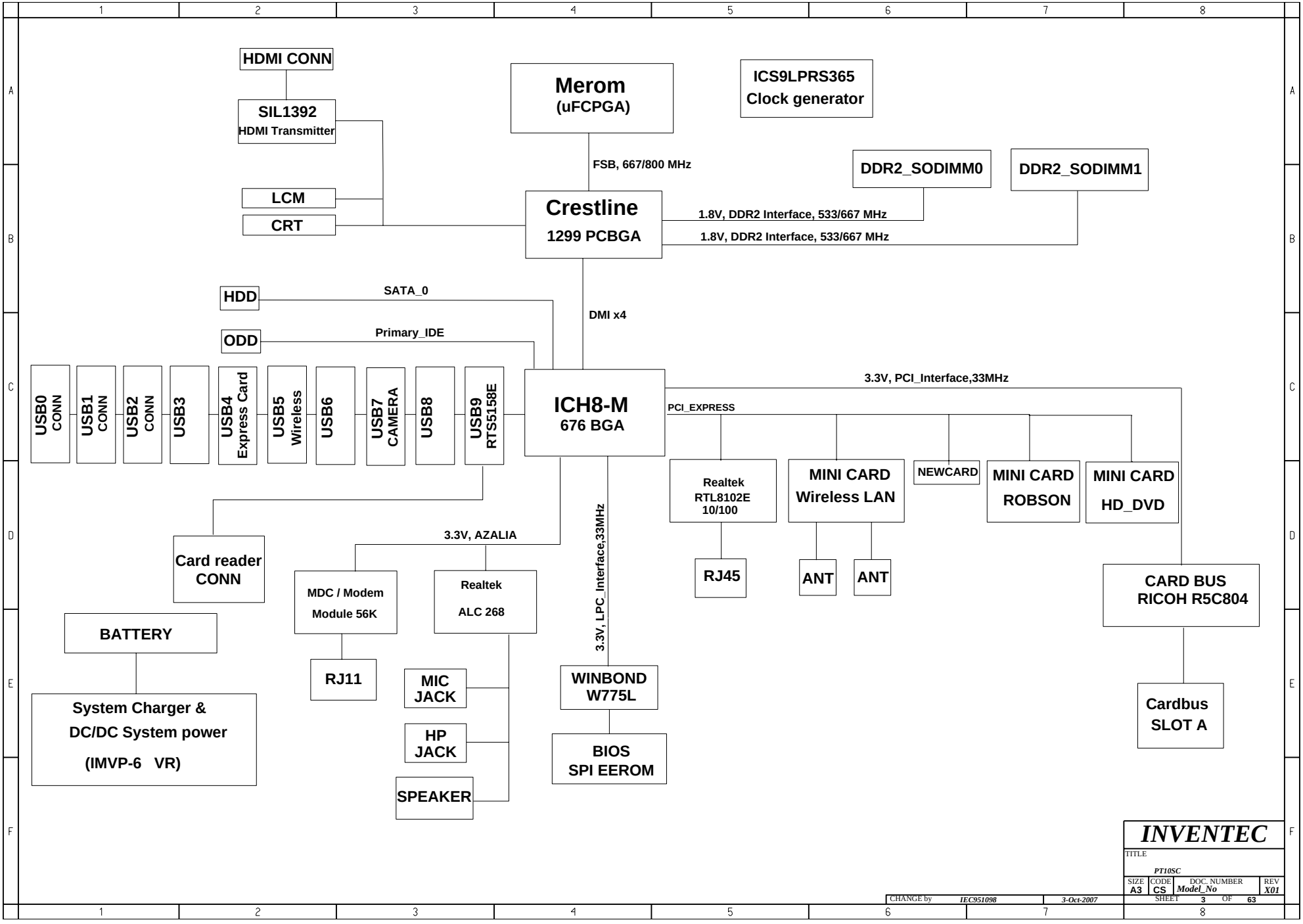
HDMI CONN
SIL1392
HDMI Transmitter
LCM
CRT
Merom
(uFCPGA)
ICS9LPRS365
Clock generator
FSB, 667/800 MHz
DDR2_SODIMM0
DDR2_SODIMM1
Crestline
1299 PCBGA
1.8V, DDR2 Interface, 533/667 MHz
1.8V, DDR2 Interface, 533/667 MHz
HDD
SATA_0
DMI x4
ODD
Primary_IDE
USB0 CONN
USB1 CONN
USB2 CONN
USB3
USB4 Express Card
USB5 Wireless
USB6
USB7 CAMERA
USB8
USB9 RTS5158E
ICH8-M
676 BGA
3.3V, PCI_Interface,33MHz
PCI_EXPRESS
Realtek
RTL8102E
10/100
MINI CARD
Wireless LAN
NEWCARD
MINI CARD
ROBSON
MINI CARD
HD_DVD
RJ45
ANT
ANT
Card reader
CONN
3.3V, AZALIA
MDC / Modem
Module 56K
Realtek
ALC 268
3.3V, LPC_Interface,33MHz
CARD BUS
RICOH R5C804
BATTERY
RJ11
MIC
JACK
HP
JACK
SPEAKER
WINBOND
W775L
BIOS
SPI EEROM
Cardbus
SLOT A
System Charger &
DC/DC System power
(IMVP-6 VR)
INVENTEC
TITLE
PT10SC
SIZE A3
CODE CS
DOC. NUMBER Model_No
REV X01
SHEET 3 OF 63
CHANGE by IEC951098
3-Oct-2007

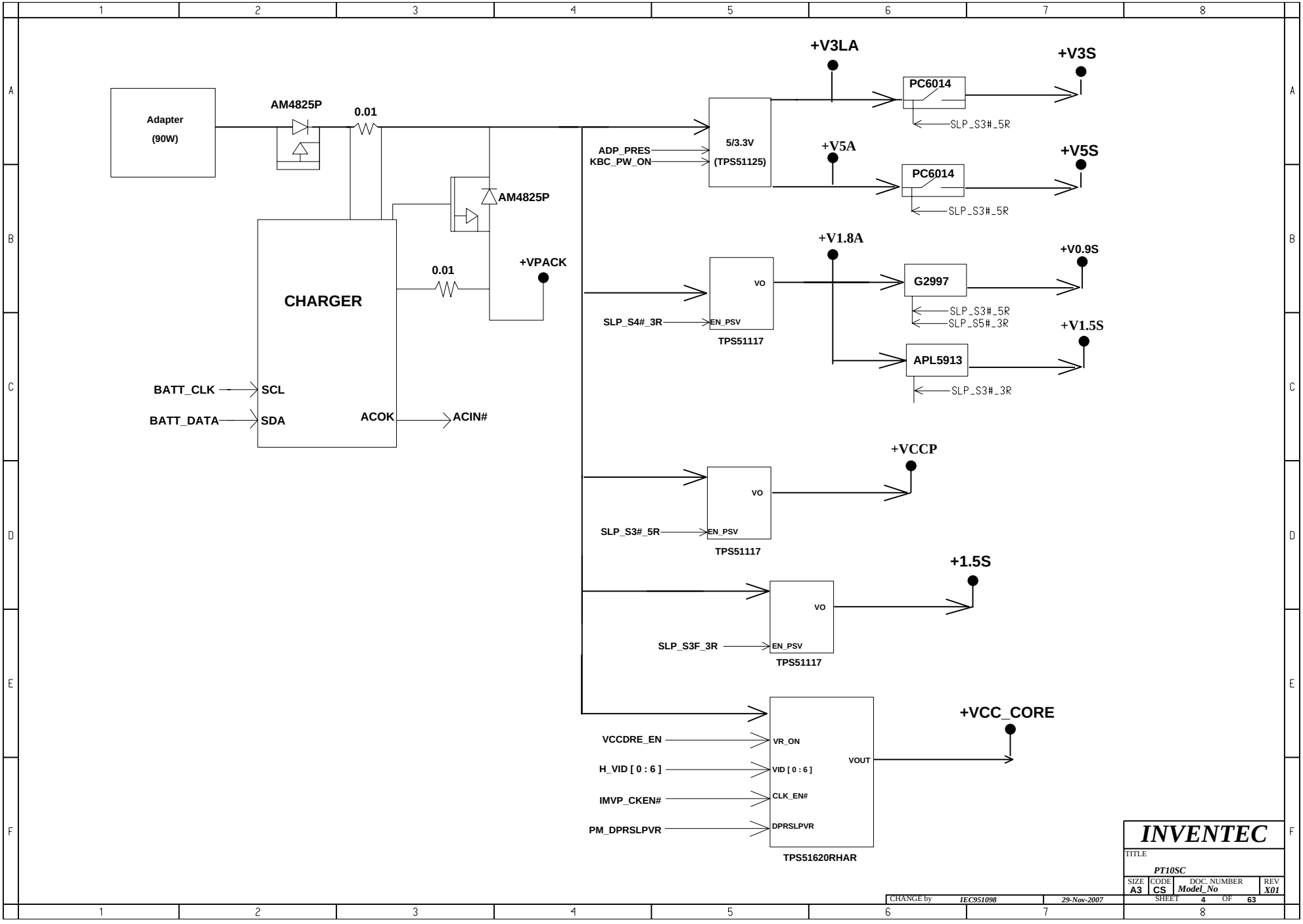
Adapter
(90W)
AM4825P
0.01
AM4825P
0.01
+VPACK
CHARGER
BATT_CLK
SCL
BATT_DATA
SDA
ACOK
ACIN#
+V3LA
+V3S
PC6014
SLP_S3#_5R
ADP_PRES
KBC_PW_ON
5/3.3V
(TPS51125)
+V5A
+V5S
PC6014
SLP_S3#_5R
+V1.8A
+V0.9S
VO
G2997
SLP_S3#_5R
SLP_S5#_3R
SLP_S4#_3R
EN_PSV
TPS51117
+V1.5S
APL5913
SLP_S3#_3R
+VCCP
VO
SLP_S3#_5R
EN_PSV
TPS51117
+1.5S
VO
SLP_S3F_3R
EN_PSV
TPS51117
+VCC_CORE
VCCDRE_EN
VR_ON
H_VID [0 : 6]
VID [0 : 6]
IMVP_CKEN#
CLK_EN#
PM_DPRSLPVR
DPRSLPVR
VOUT
TPS51620RHAR
INVENTEC
TITLE
PT10SC
SIZE A3
CODE CS
DOC. NUMBER Model_No
REV X01
CHANGE by IEC951098
29-Nov-2007
SHEET 4 OF 63

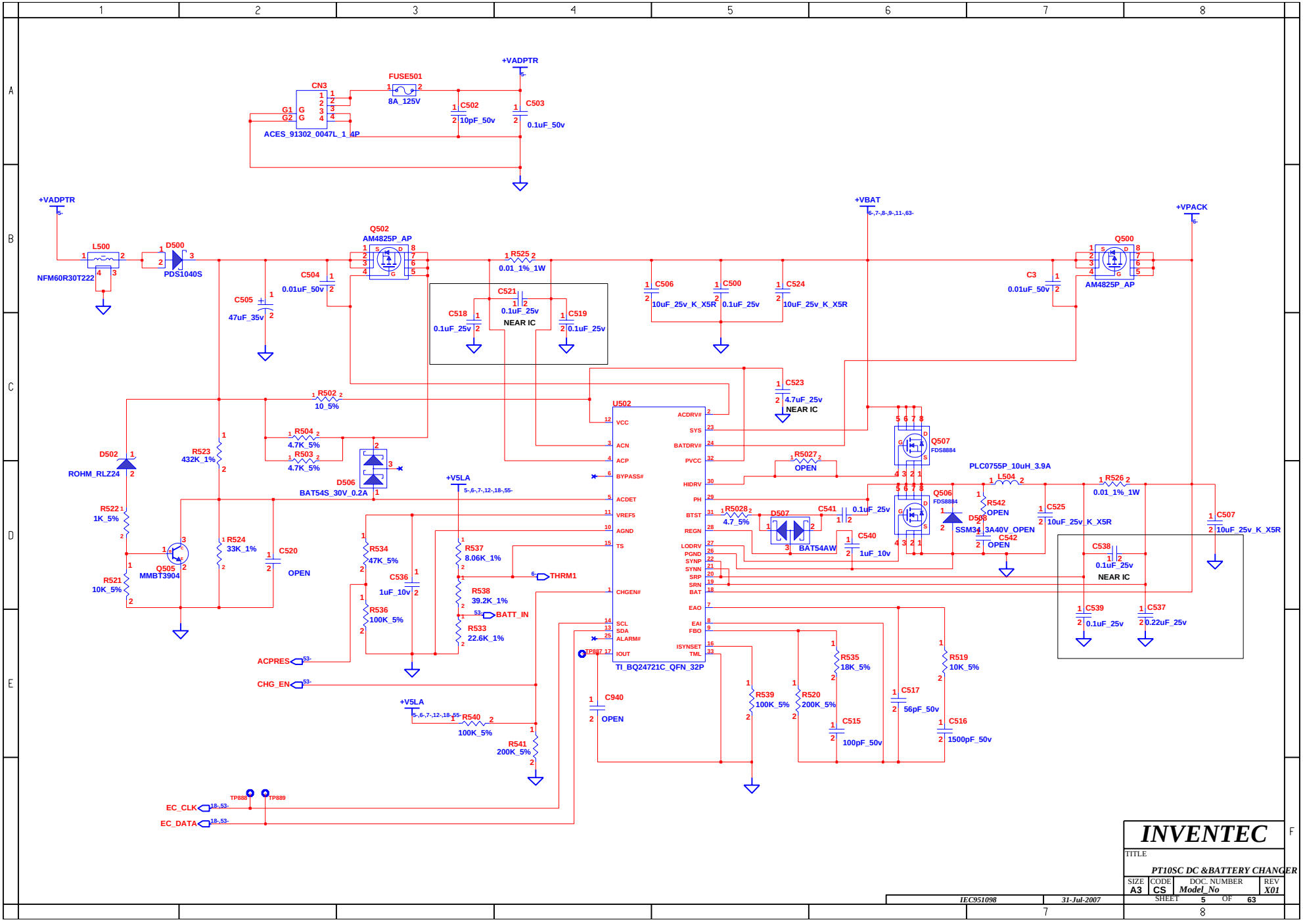
+VADPTR
CN3
FUSE501
8A_125V
C502
10pF_50v
C503
0.1uF_50v
ACES_91302_0047L_1_4P
L500
NFM60R30T222
D500
PDS1040S
C505
47uF_35v
C504
0.01uF_50v
Q502
AM4825P_AP
R525
0.01_1%_1W
C521
0.1uF_25v
NEAR IC
C518
0.1uF_25v
C519
0.1uF_25v
C506
10uF_25v_K_X5R
C500
0.1uF_25v
C524
10uF_25v_K_X5R
+VBAT
C3
0.01uF_50v
Q500
AM4825P_AP
+VPACK
C523
4.7uF_25v
NEAR IC
R502
10_5%
R504
4.7K_5%
R503
4.7K_5%
D502
ROHM_RLZ24
R523
432K_1%
D506
BAT54S_30V_0.2A
+V5LA
U502
VCC
ACN
ACP
BYPASS#
ACDET
VREF5
AGND
TS
CHGEN#
SCL
SDA
ALARM#
IOUT
ACDRV#
SYS
BATDRV#
PVCC
HIDRV
PH
BTST
REGN
LODRV
PGND
SYNP
SYNN
SRP
SRN
BAT
EAO
EAI
FBO
ISYNSET
TML
TI_BQ24721C_QFN_32P
R5027
OPEN
Q507
FDS8884
Q506
FDS8884
PLC0755P_10uH_3.9A
L504
R542
OPEN
D508
SSM34_3A40V_OPEN
C542
OPEN
R526
0.01_1%_1W
C525
10uF_25v_K_X5R
C507
10uF_25v_K_X5R
C538
0.1uF_25v
NEAR IC
C539
0.1uF_25v
C537
0.22uF_25v
R5028
4.7_5%
D507
BAT54AW
C541
0.1uF_25v
C540
1uF_10v
R522
1K_5%
Q505
MMBT3904
R521
10K_5%
R524
33K_1%
C520
OPEN
R534
47K_5%
C536
1uF_10v
R536
100K_5%
R537
8.06K_1%
THRM1
R538
39.2K_1%
BATT_IN
R533
22.6K_1%
ACPRES
CHG_EN
C940
OPEN
R540
100K_5%
R541
200K_5%
R539
100K_5%
R520
200K_5%
R535
18K_5%
C515
100pF_50v
C517
56pF_50v
R519
10K_5%
C516
1500pF_50v
TP887
TP888
TP889
EC_CLK
EC_DATA
INVENTEC
TITLE
PT10SC DC &BATTERY CHANGER
SIZE A3
CODE CS
DOC. NUMBER Model_No
REV X01
SHEET 5 OF 63
IEC951098
31-Jul-2007

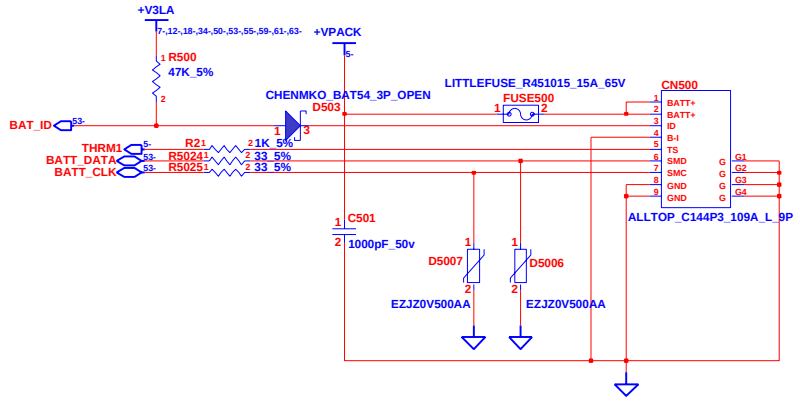

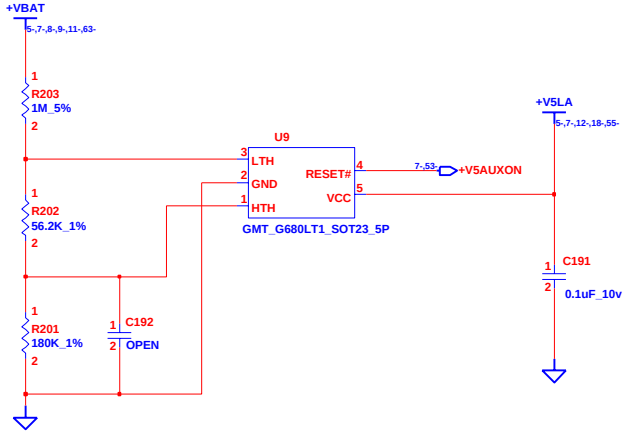

CHANGE by	IEC951098	31-Jul-2007	

INVENTEC

TITLE

PT10SC BATTERY CONN

SIZE	CODE	DOC. NUMBER	REV
A3	CS	*Model_No*	*X01*

SHEET 6 OF 63

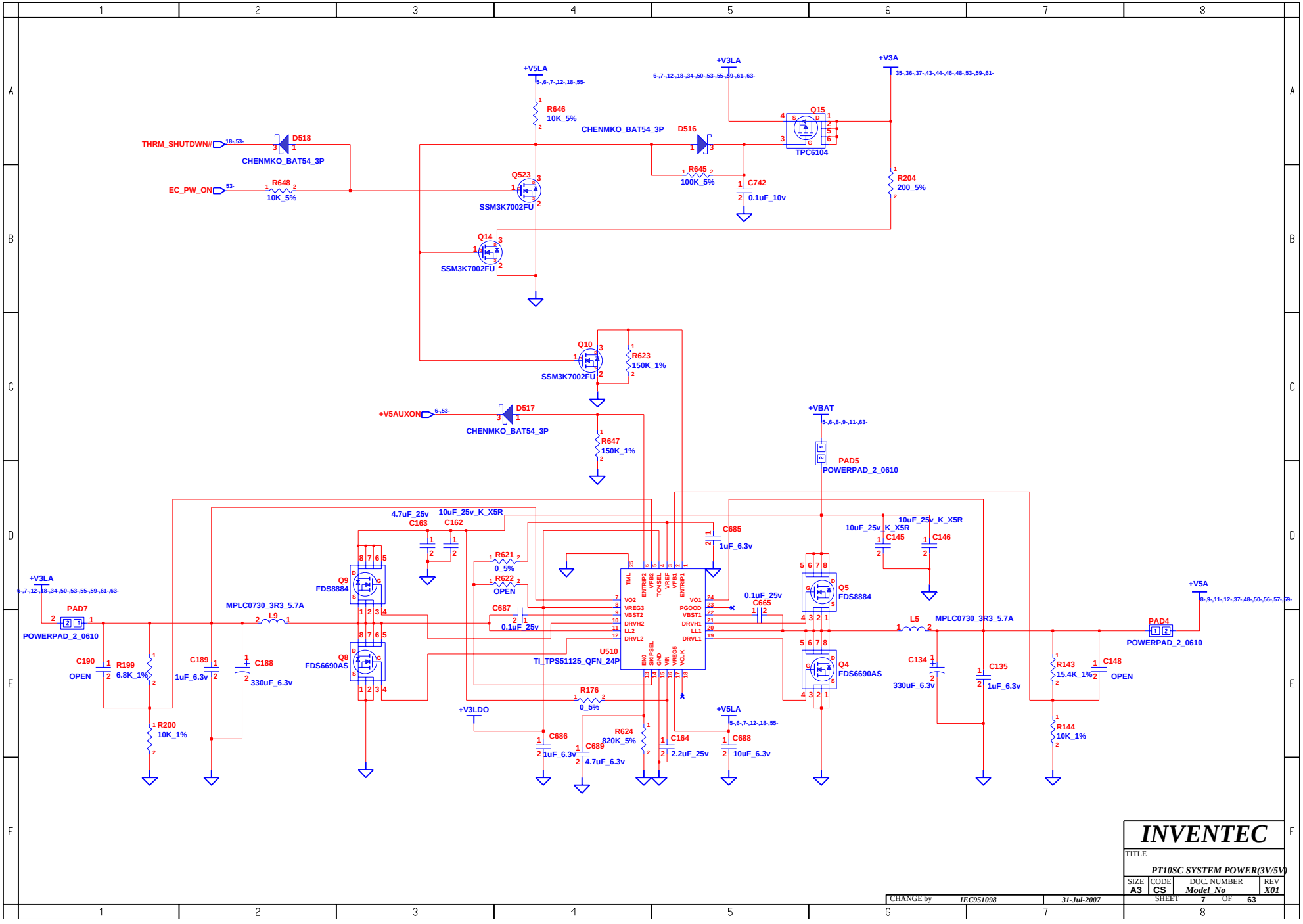
+V5LA
5-,6-,7-,12-,18-,55-
R646
10K_5%
+V3LA
6-,7-,12-,18-,34-,50-,53-,55-,59-,61-,63-
+V3A
35-,36-,37-,43-,44-,46-,48-,53-,59-,61-
Q15
TPC6104
THRM_SHUTDWN#
18-,53-
D518
CHENMKO_BAT54_3P
CHENMKO_BAT54_3P
D516
R645
100K_5%
C742
0.1uF_10v
R204
200_5%
EC_PW_ON
53-
R648
10K_5%
Q523
SSM3K7002FU
Q14
SSM3K7002FU
Q10
SSM3K7002FU
R623
150K_1%
+V5AUXON
6-,53-
D517
CHENMKO_BAT54_3P
R647
150K_1%
+VBAT
5-,6-,8-,9-,11-,63-
PAD5
POWERPAD_2_0610
4.7uF_25v
C163
10uF_25v_K_X5R
C162
C685
1uF_6.3v
10uF_25v_K_X5R
C145
10uF_25v_K_X5R
C146
R621
0_5%
R622
OPEN
C687
0.1uF_25v
+V3LA
6-,7-,12-,18-,34-,50-,53-,55-,59-,61-,63-
PAD7
POWERPAD_2_0610
MPLC0730_3R3_5.7A
L9
Q9
FDS8884
Q8
FDS6690AS
TI_TPS51125_QFN_24P
U510
TNL
ENTRIP2
VFB2
TONSEL
VREF
VFB1
ENTRIP1
VO2
VREG3
VBST2
DRVH2
LL2
DRVL2
VO1
PGOOD
VBST1
DRVH1
LL1
DRVL1
EN0
SKIPSEL
EN0
VR
VREG5
VCLK
0.1uF_25v
C665
Q5
FDS8884
Q4
FDS6690AS
L5
MPLC0730_3R3_5.7A
+V5A
5-,6-,9-,11-,12-,37-,48-,50-,56-,57-,59-
PAD4
POWERPAD_2_0610
C190
OPEN
R199
6.8K_1%
C189
1uF_6.3v
C188
330uF_6.3v
C134
330uF_6.3v
C135
1uF_6.3v
R143
15.4K_1%
C148
OPEN
R176
0_5%
+V3LDO
+V5LA
5-,6-,7-,12-,18-,55-
R200
10K_1%
C686
1uF_6.3v
C689
4.7uF_6.3v
R624
820K_5%
C164
2.2uF_25v
C688
10uF_6.3v
R144
10K_1%
INVENTEC
TITLE
PT10SC SYSTEM POWER(3V/5V)
SIZE A3
CODE CS
DOC. NUMBER Model_No
REV X01
SHEET 7 OF 63
CHANGE by IEC951098
31-Jul-2007

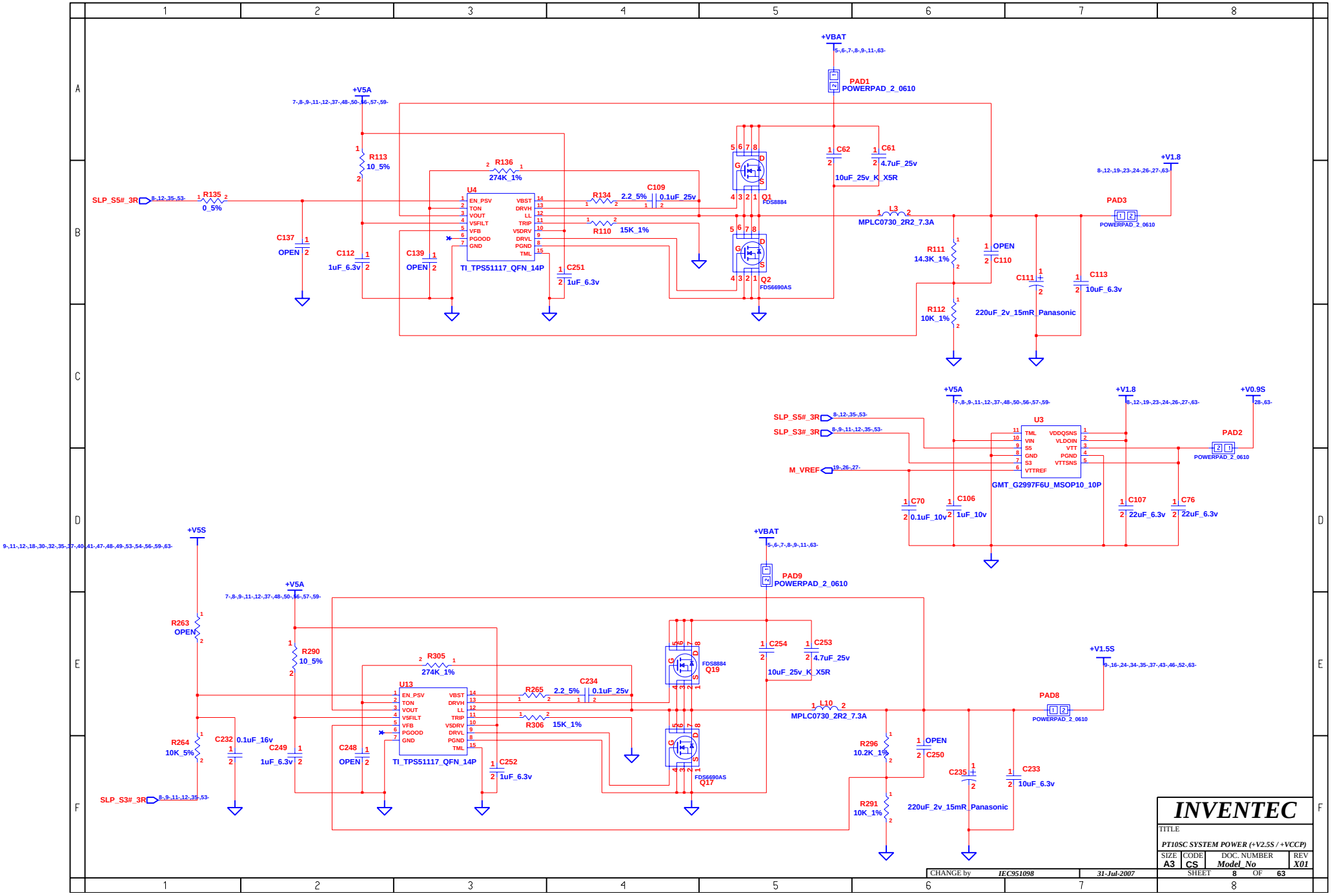
+VBAT
PAD1
POWERPAD_2_0610
+V5A
R113
10_5%
R136
274K_1%
U4
SLP_S5#_3R
R135
0_5%
EN_PSV
TON
VOUT
VSFILT
VFB
PGOOD
GND
VBST
DRVH
LL
TRIP
V5DRV
DRVL
PGND
TML
TI_TPS51117_QFN_14P
R134
2.2_5%
C109
0.1uF_25v
R110
15K_1%
Q1
FDS8884
Q2
FDS6690AS
C62
10uF_25v_K_X5R
C61
4.7uF_25v
L3
MPLC0730_2R2_7.3A
+V1.8
PAD3
C137
OPEN
C112
1uF_6.3v
C139
OPEN
C251
1uF_6.3v
R111
14.3K_1%
R112
10K_1%
C110
OPEN
C111
220uF_2v_15mR_Panasonic
C113
10uF_6.3v
+V5A
+V1.8
+V0.9S
SLP_S5#_3R
SLP_S3#_3R
M_VREF
U3
TML
VIN
S5
GND
S3
VTTREF
VDDQSNS
VLDOIN
VTT
PGND
VTTSNS
GMT_G2997F6U_MSOP10_10P
PAD2
POWERPAD_2_0610
C70
0.1uF_10v
C106
1uF_10v
C107
22uF_6.3v
C76
22uF_6.3v
+V5S
+VBAT
PAD9
POWERPAD_2_0610
+V5A
R263
OPEN
R290
10_5%
R305
274K_1%
U13
EN_PSV
TON
VOUT
VSFILT
VFB
PGOOD
GND
VBST
DRVH
LL
TRIP
V5DRV
DRVL
PGND
TML
TI_TPS51117_QFN_14P
R265
2.2_5%
C234
0.1uF_25v
R306
15K_1%
Q19
FDS8884
Q17
FDS6690AS
C254
10uF_25v_K_X5R
C253
4.7uF_25v
L10
MPLC0730_2R2_7.3A
+V1.5S
PAD8
POWERPAD_2_0610
R264
10K_5%
C232
0.1uF_16v
C249
1uF_6.3v
C248
OPEN
C252
1uF_6.3v
R296
10.2K_1%
C250
OPEN
C235
220uF_2v_15mR_Panasonic
C233
10uF_6.3v
R291
10K_1%
SLP_S3#_3R
INVENTEC
TITLE
PT10SC SYSTEM POWER (+V2.5S / +VCCP)
SIZE A3
CODE CS
DOC. NUMBER Model_No
REV X01
CHANGE by IEC951098
31-Jul-2007
SHEET 8 OF 63

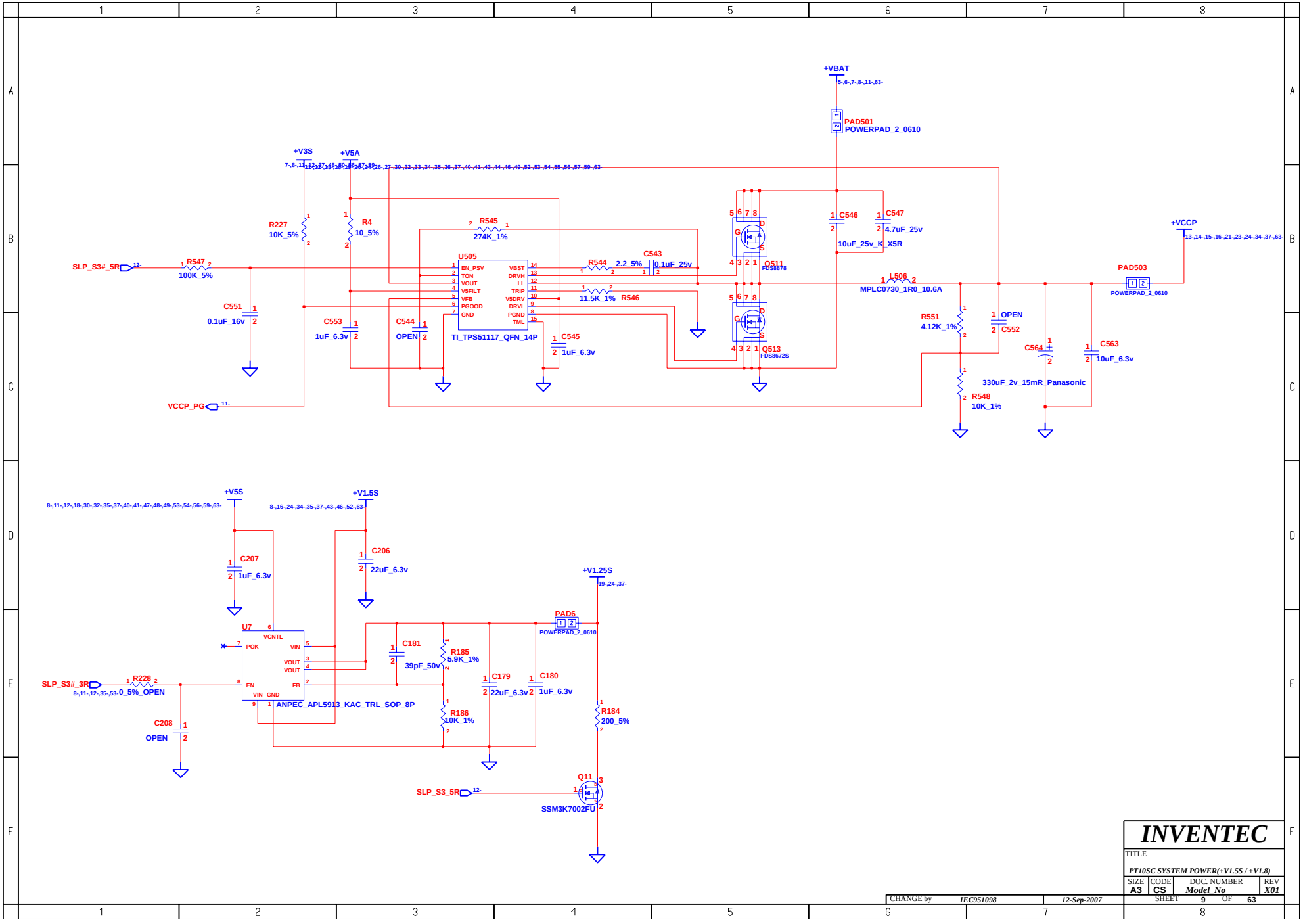
+VBAT
PAD501
POWERPAD_2_0610
+V3S
+V5A
R227
10K_5%
R4
10_5%
R545
274K_1%
U505
EN_PSV
TON
VOUT
VSFILT
VFB
PGOOD
GND
VBST
DRVH
LL
TRIP
VSDRV
DRVL
PGND
TNL
TI_TPS51117_QFN_14P
SLP_S3#_5R
R547
100K_5%
C551
0.1uF_16v
C553
1uF_6.3v
C544
OPEN
C545
1uF_6.3v
R544
2.2_5%
C543
0.1uF_25v
11.5K_1%
R546
Q511
FDS8878
Q513
FDS8672S
C546
C547
4.7uF_25v
10uF_25v_K_X5R
L506
MPLC0730_1R0_10.6A
+VCCP
PAD503
POWERPAD_2_0610
R551
4.12K_1%
OPEN
C552
C564
330uF_2v_15mR_Panasonic
C563
10uF_6.3v
R548
10K_1%
VCCP_PG
+V5S
+V1.5S
C207
1uF_6.3v
C206
22uF_6.3v
+V1.25S
PAD6
POWERPAD_2_0610
U7
VCNTL
POK
VIN
VOUT
VOUT
EN
FB
VIN
GND
ANPEC_APL5913_KAC_TRL_SOP_8P
SLP_S3#_3R
R228
0_5%_OPEN
C208
OPEN
C181
39pF_50v
R185
5.9K_1%
R186
10K_1%
C179
22uF_6.3v
C180
1uF_6.3v
R184
200_5%
Q11
SSM3K7002FU
SLP_S3_5R
INVENTEC
TITLE
PT10SC SYSTEM POWER(+V1.5S / +V1.8)
SIZE A3
CODE CS
DOC. NUMBER Model_No
REV X01
SHEET 9 OF 63
CHANGE by IEC951098
12-Sep-2007

BLANK

INVENTEC			
TITLE	PT10SC CPU POWER(VCC_CORE)		
SIZE A3	CODE CS	DOC. NUMBER Model_No	REV X01
CHANGE by IEC951098	30-Nov-2007	SHEET 10 OF 63	

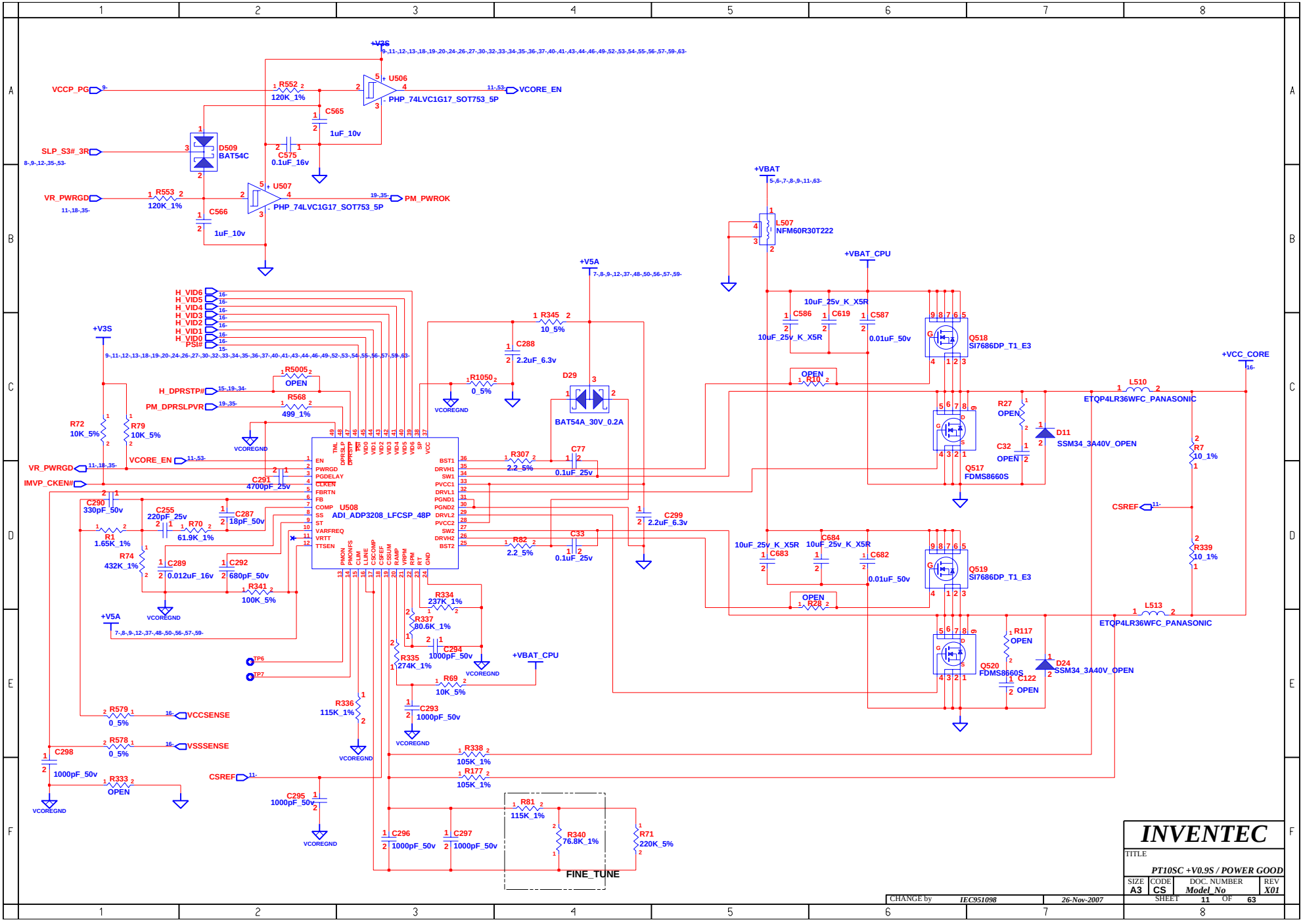

CHANGE by	IEC951098	26-Nov-2007	

INVENTEC

TITLE: *PT10SC +V0.9S / POWER GOOD*

SIZE	CODE	DOC. NUMBER	REV
A3	CS	Model_No	X01

SHEET 11 OF 63

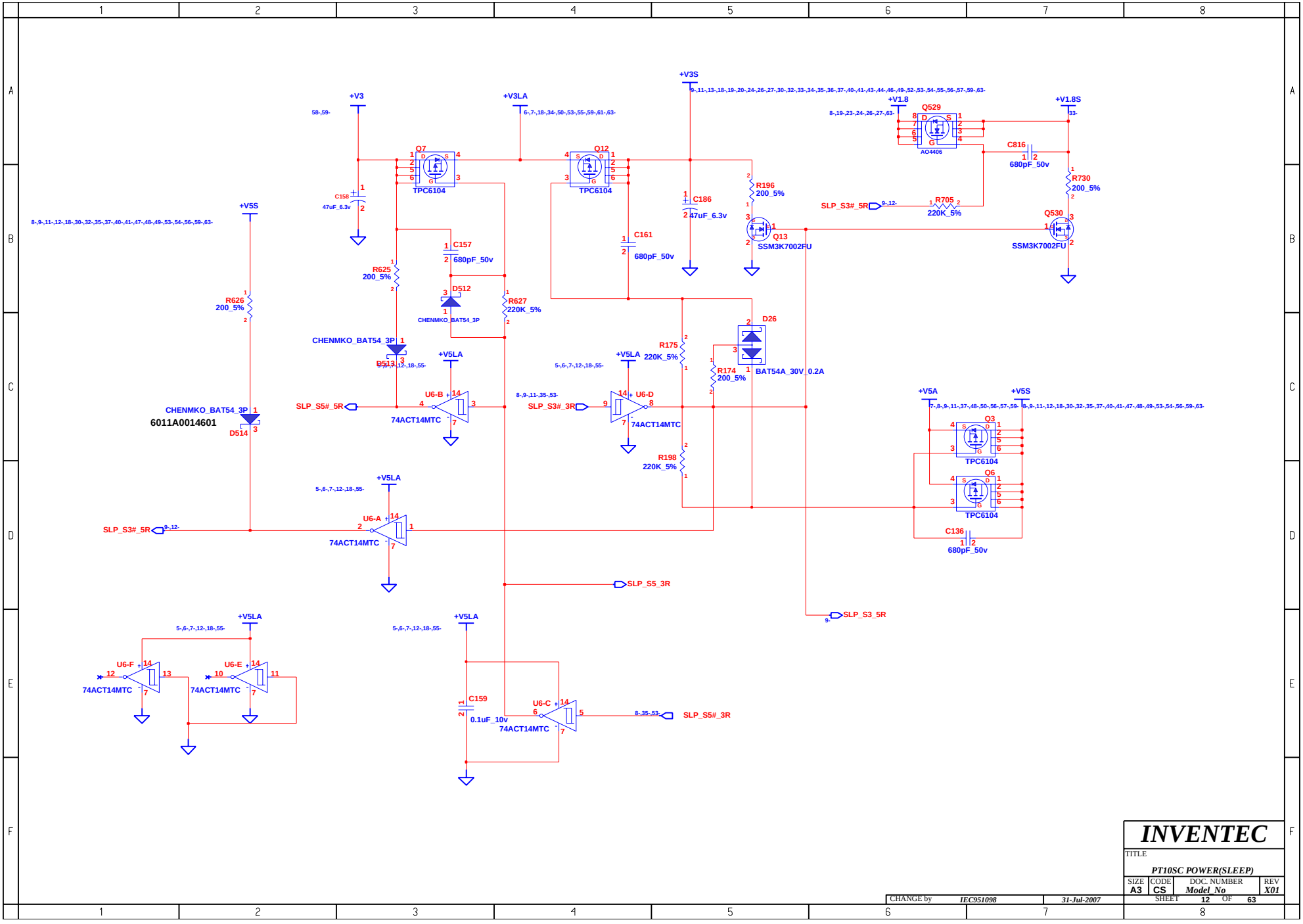

INVENTEC			
TITLE	PT10SC POWER(SLEEP)		
SIZE A3	CODE CS	DOC. NUMBER Model_No	REV X01
CHANGE by IEC951098	31-Jul-2007	SHEET 12 OF 63	

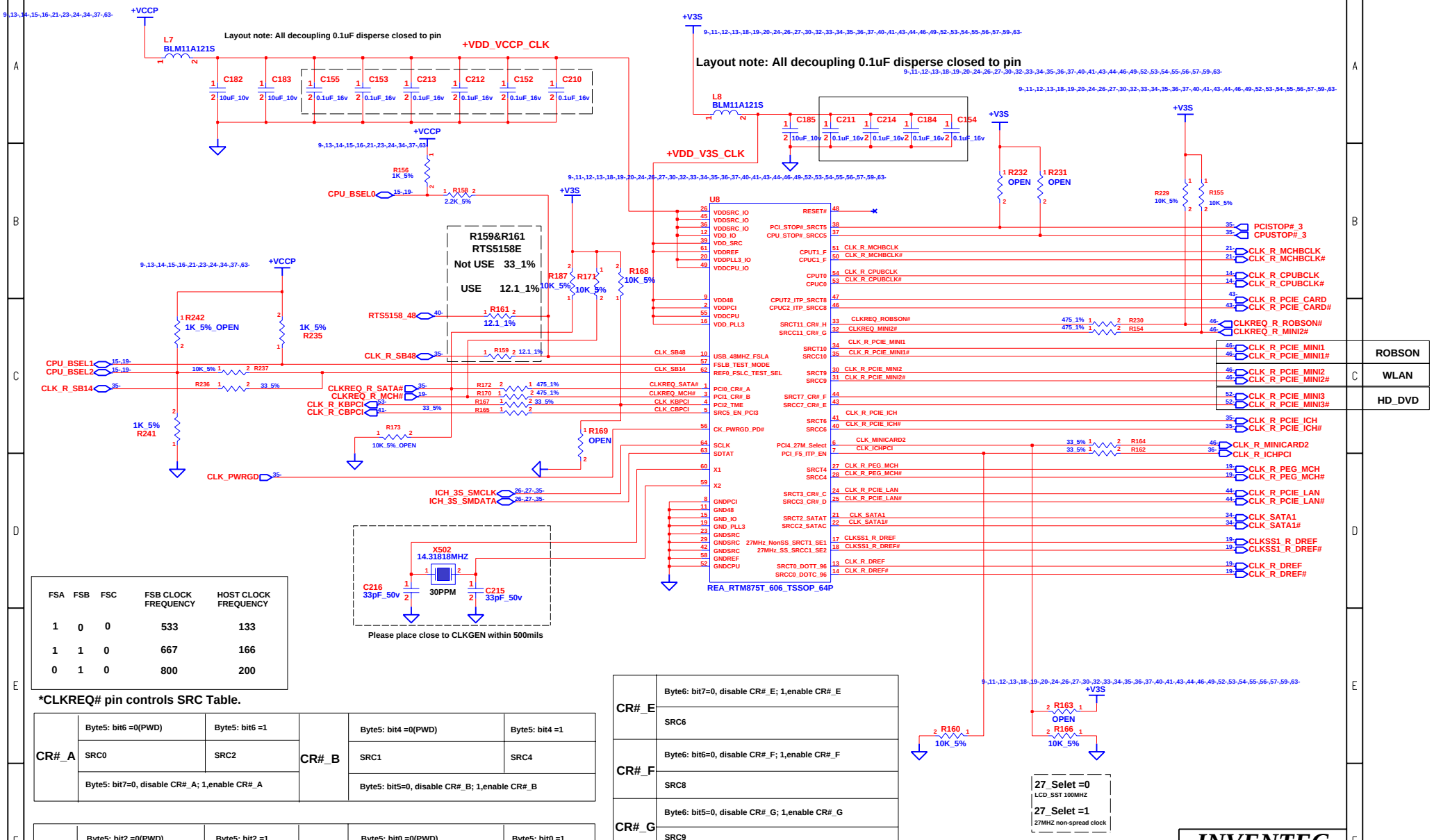

FSA	FSB	FSC	FSB CLOCK FREQUENCY	HOST CLOCK FREQUENCY
1	0	0	533	133
1	1	0	667	166
0	1	0	800	200

*CLKREQ# pin controls SRC Table.

CR#_A	Byte5: bit6 =0(PWD)	Byte5: bit6 =1	CR#_B	Byte5: bit4 =0(PWD)	Byte5: bit4 =1
	SRC0	SRC2		SRC1	SRC4
	Byte5: bit7=0, disable CR#_A; 1,enable CR#_A			Byte5: bit5=0, disable CR#_B; 1,enable CR#_B	

CR#_C	Byte5: bit2 =0(PWD)	Byte5: bit2 =1	CR#_D	Byte5: bit0 =0(PWD)	Byte5: bit0 =1
	SRC0	SRC2		SRC1	SRC4
	Byte5: bit3=0, disable CR#_C; 1,enable CR#_C			Byte5: bit1=0, disable CR#_D; 1,enable CR#_D	

CR#_E	Byte6: bit7=0, disable CR#_E; 1,enable CR#_E
	SRC6
CR#_F	Byte6: bit6=0, disable CR#_F; 1,enable CR#_F
	SRC8
CR#_G	Byte6: bit5=0, disable CR#_G; 1,enable CR#_G
	SRC9
CR#_H	Byte6: bit4=0, disable CR#_H; 1,enable CR#_H
	SRC10

INVENTEC

TITLE: PT10SC CLOCK_GENERATOR

SIZE	CODE	DOC. NUMBER	REV
A3	CS	Model_No	X01

CHANGE by IEC951098 17-Jan-2008

SHEET 13 OF 63

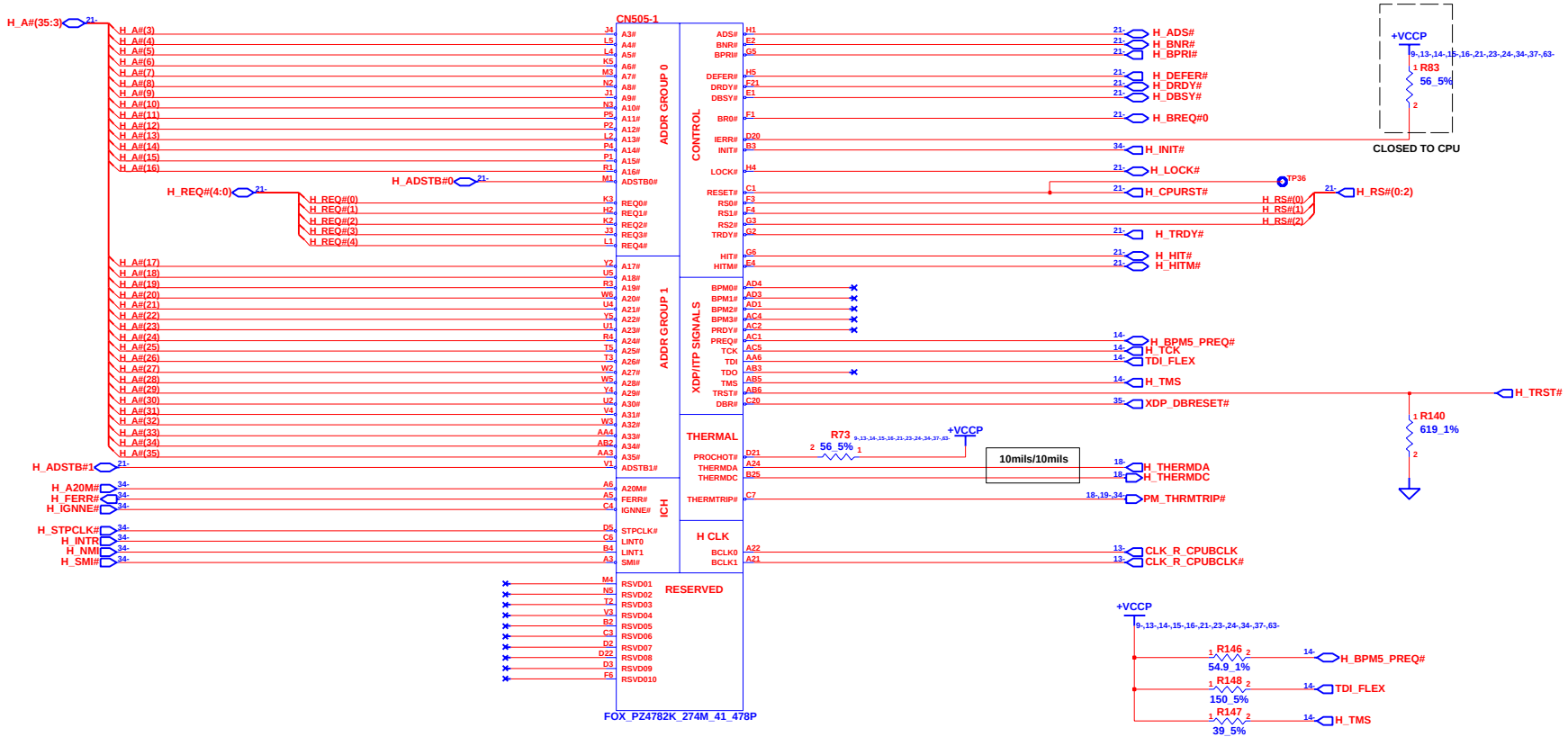

PM_THRMTRIP# should be T at CPU

INVENTEC			
TITLE	PT10SC Merom-1		
SIZE A3	CODE CS	DOC. NUMBER Model_No	REV X01
CHANGE by IEC951098	27-Aug-2007	SHEET 14 OF 63	

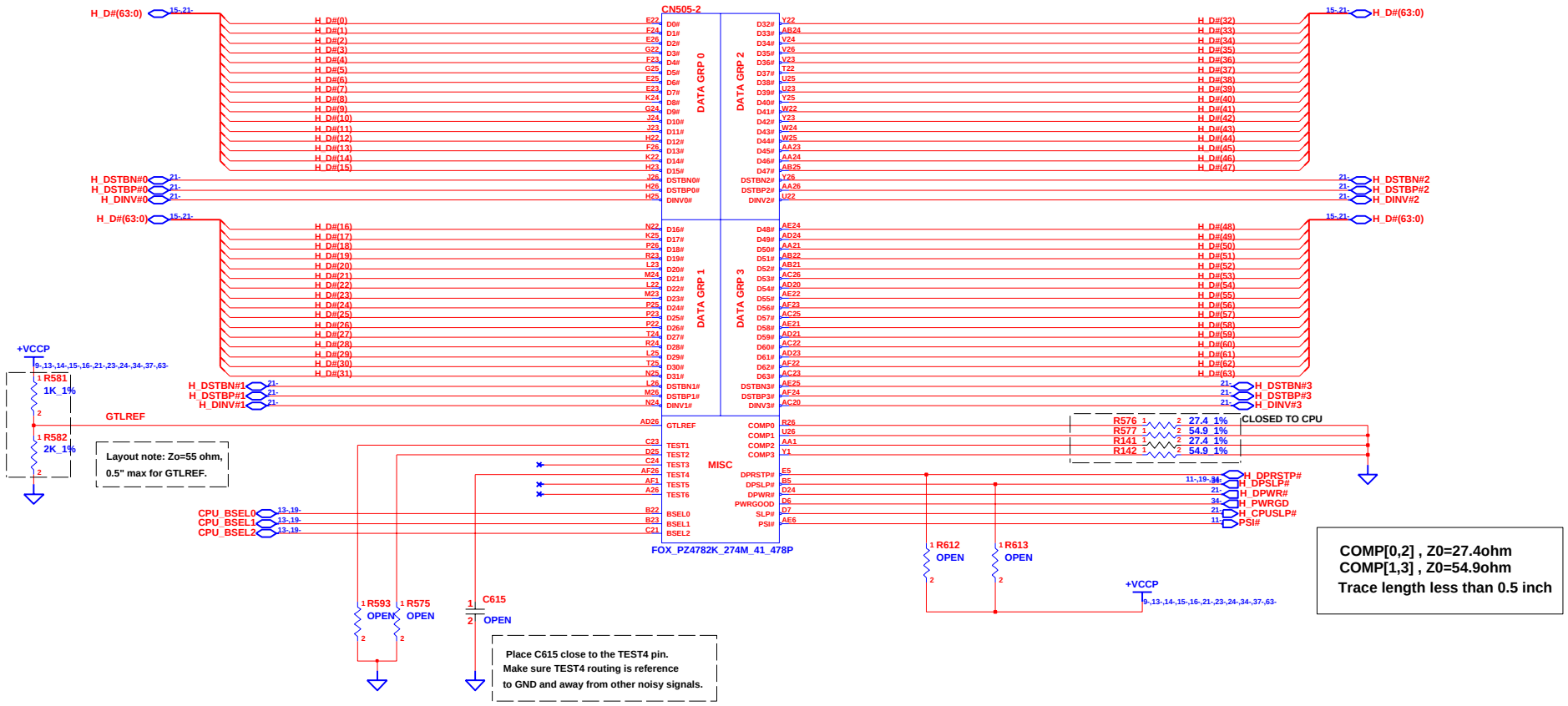

CHANGE by	IEC951098	30-Nov-2007	

INVENTEC

TITLE: *PT10SC Merom-2*

SIZE	CODE	DOC. NUMBER	REV
A3	CS	*Model_No*	*X01*

SHEET 15 OF 63

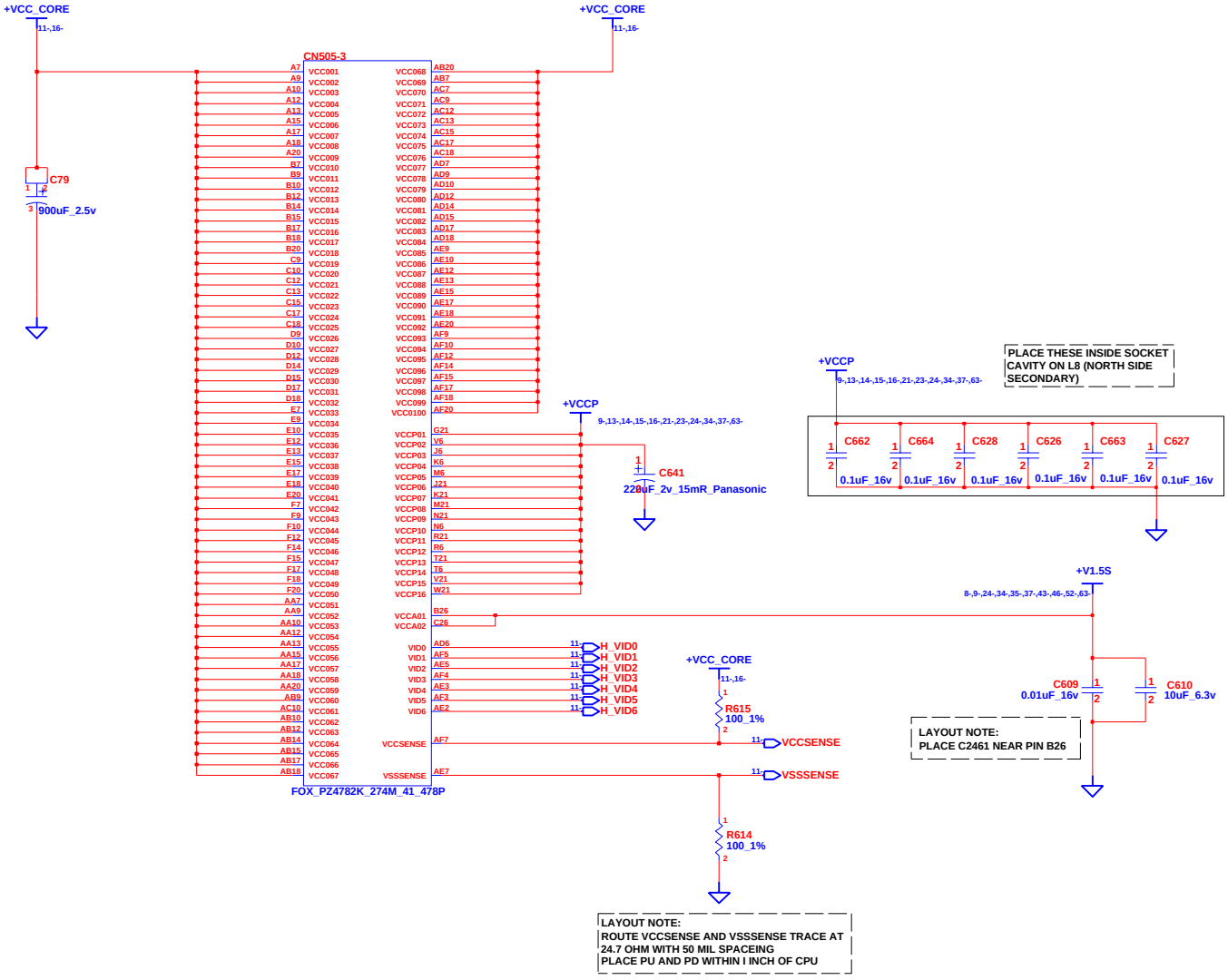

INVENTEC

TITLE

PT10SC Merom-3

SIZE	CODE	DOC. NUMBER	REV
A3	CS	*Model_No*	*X01*

CHANGE by *IEC951098* *1-Nov-2007*

SHEET 16 OF 63

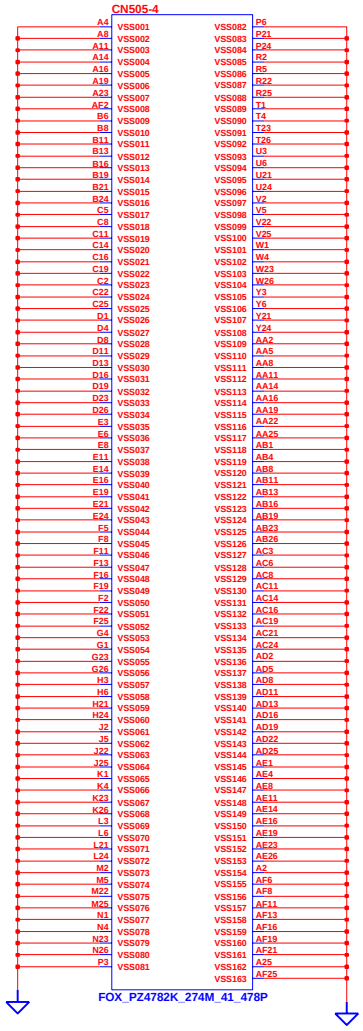

CHANGE by	IEC951098	31-Jul-2007	

INVENTEC

TITLE

PT10SC Merom-4

SIZE	CODE	DOC. NUMBER	REV
A3	CS	*Model_No*	*X01*

SHEET 17 OF 63

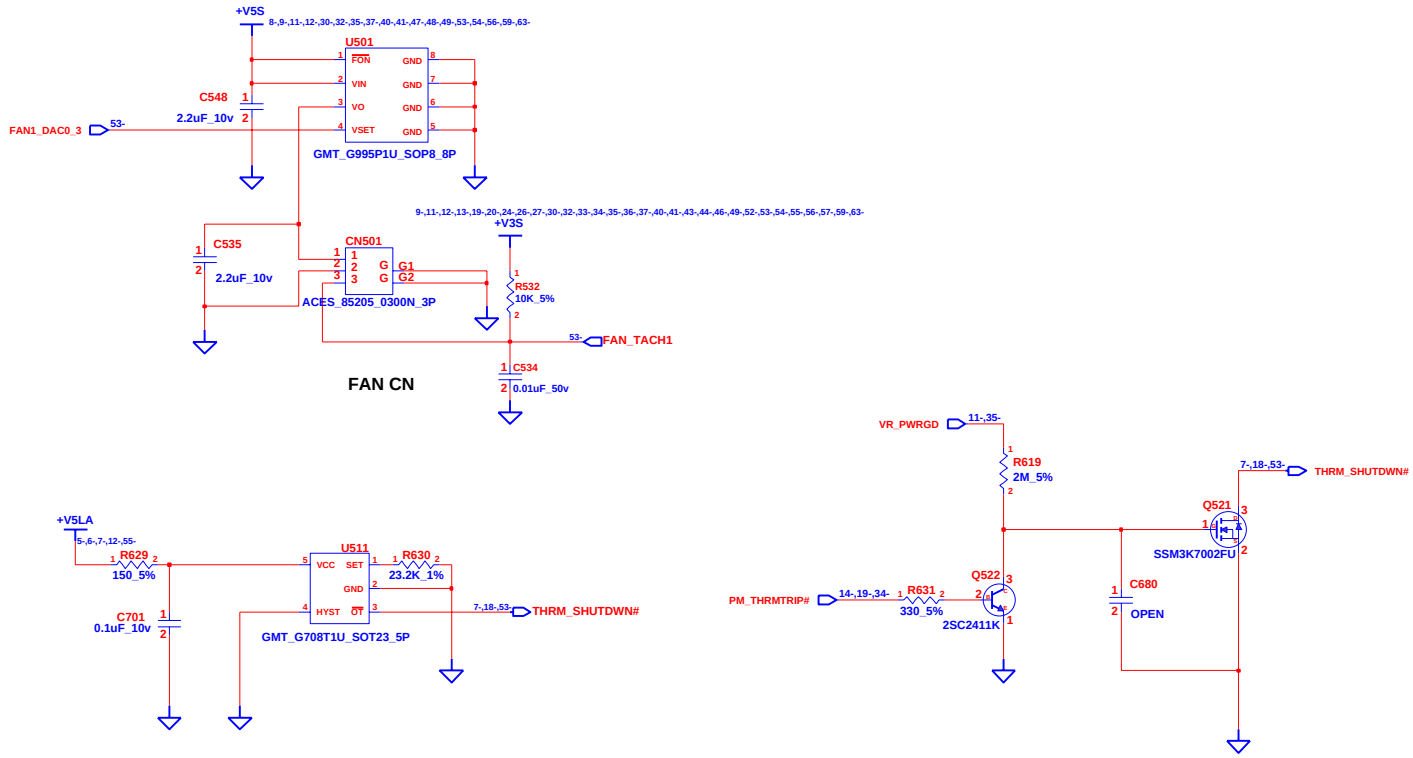

Thermal shoutdown at 89C +/-3C from 60C to 100C

RSET=0.0012*T^2- 0.9308*T+96.147

Hysteresis is 30C

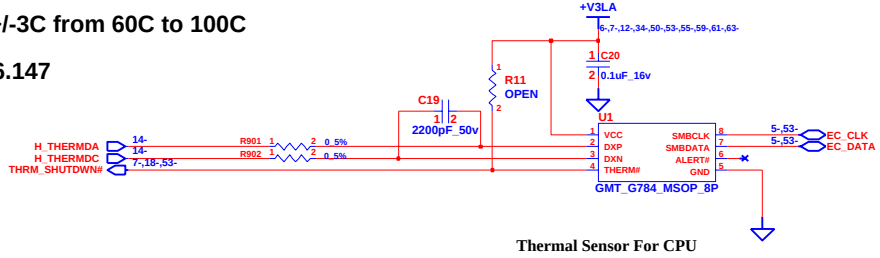

Thermal Sensor For CPU

CHANGE by	IEC951098	29-Sep-2007	

INVENTEC

TITLE

PT10SC THERMAL&FAN CONTROLLER

SIZE	CODE	DOC. NUMBER	REV
A3	CS	*Model_No*	*X01*

SHEET 18 OF 63

MCH_CFG(5)	LOW=DMIx2 HIGH=DMIx4

MCH_CFG(7) (CPU Strap)	LOW=RSVD HIGH=Mobile CPU

MCH_CFG(9) PCIE Graphics Lane	LOW=Reverse Lane HIGH=Normal operation

MCH_CFG(13:12) XOR/ALLZ	00=PARTIAL CLOCK GATING DISABLE 01=XOR MODE ENABLE 10=ALL-Z MODE ENABLE 11=NORMAL OPERATION

MCH_CFG(16) (FSB Dynamic ODT)	LOW=Dynamic ODT Disable HIGH=Dynamic ODT Enable

MCH_CFG(11) PSB 4X CLK ENABLE	LOW=CALISTOGA HIGH=RESERVED

NOTE: CFG[2:0] STRP : 001b : 533 MT/S
011b : 667 MT/S

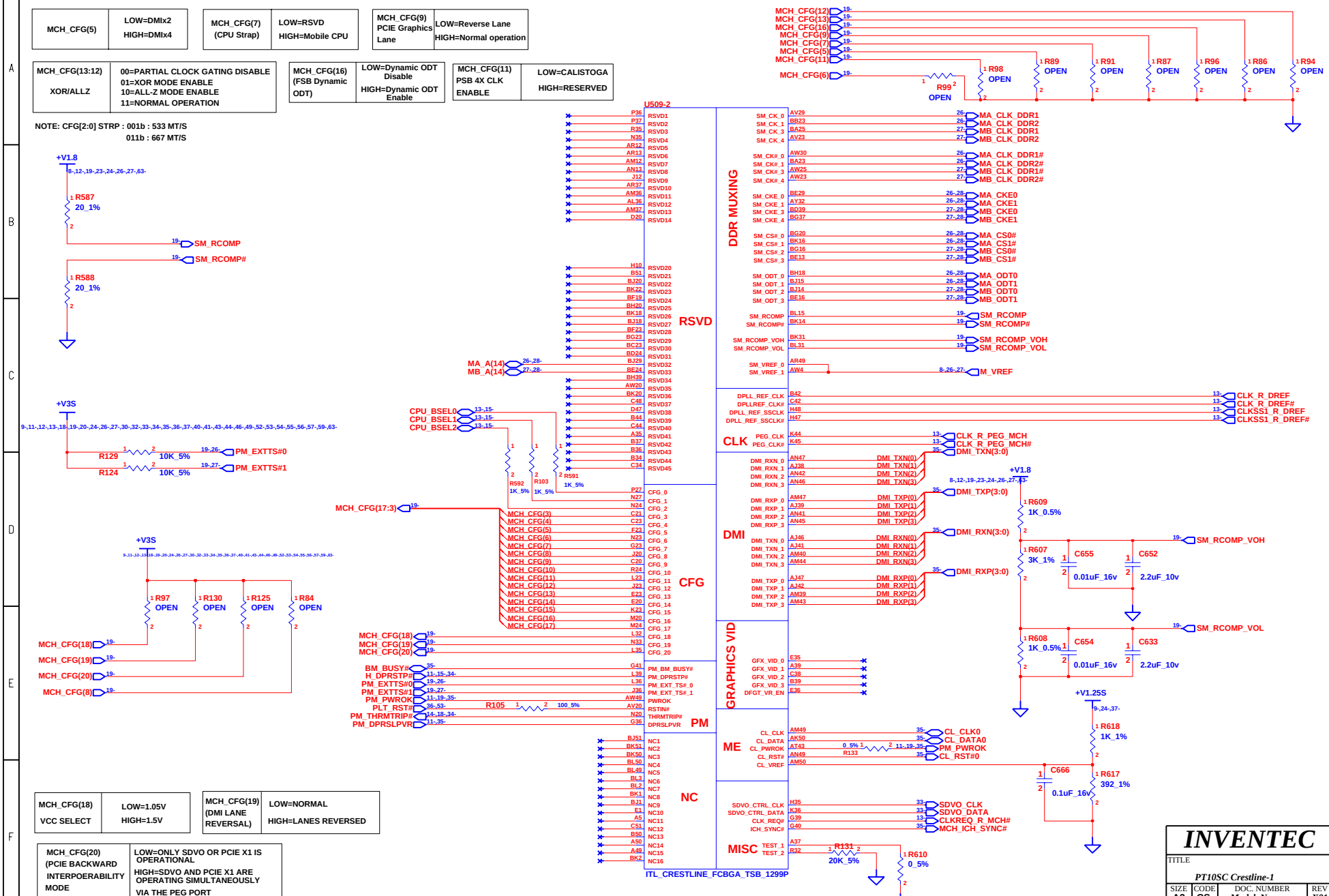

MCH_CFG(18) VCC SELECT	LOW=1.05V HIGH=1.5V

MCH_CFG(19) (DMI LANE REVERSAL)	LOW=NORMAL HIGH=LANES REVERSED

MCH_CFG(20) (PCIE BACKWARD INTERPOERABILITY MODE	LOW=ONLY SDVO OR PCIE X1 IS OPERATIONAL HIGH=SDVO AND PCIE X1 ARE OPERATING SIMULTANEOUSLY VIA THE PEG PORT

CHANGE by	IEC951098	30-Nov-2007	

INVENTEC

TITLE: PT10SC Crestline-1

SIZE	CODE	DOC. NUMBER	REV
A3	CS	Model_No	X01

SHEET 19 OF 63

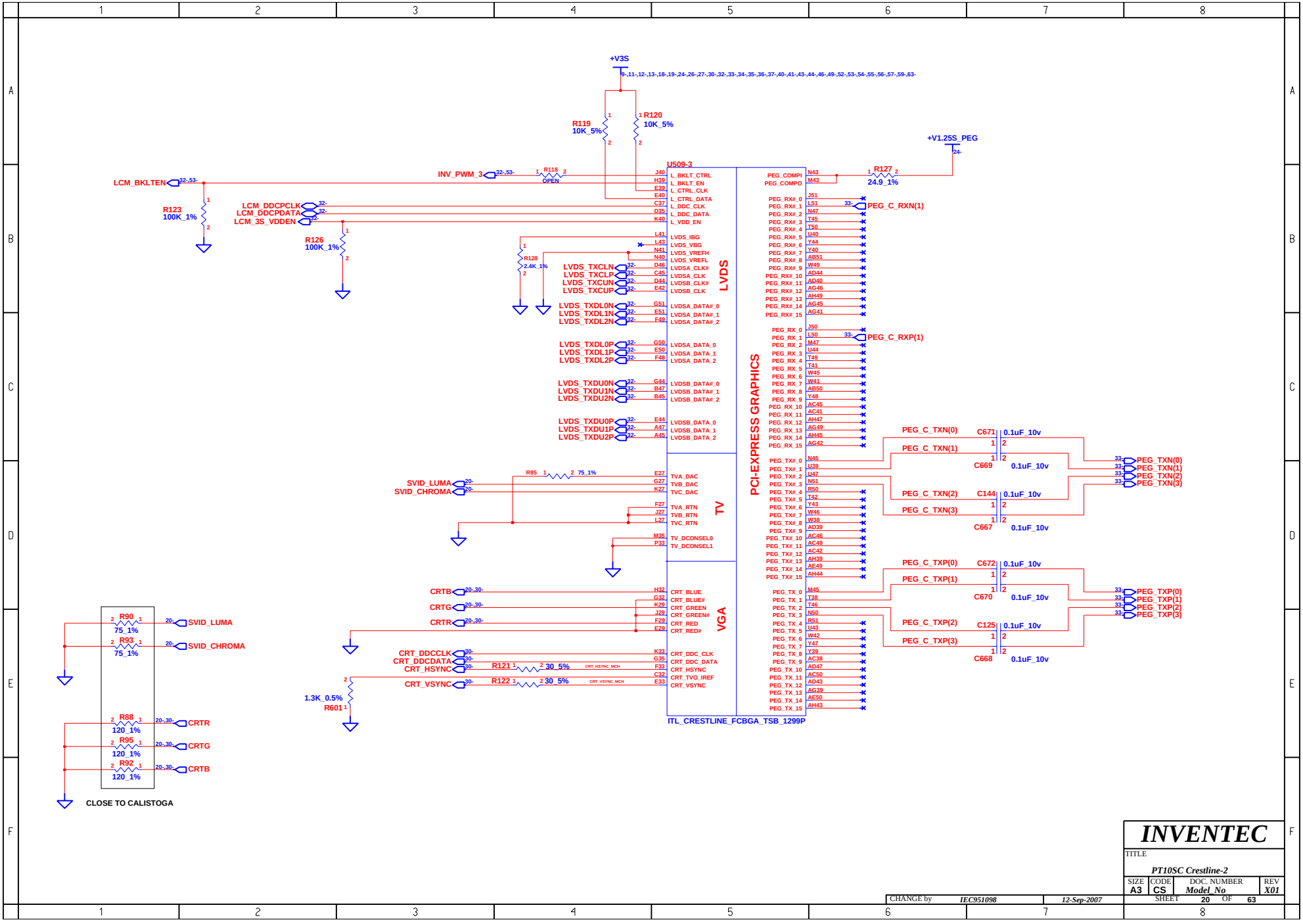
+V3S
R119 10K_5%
R120 10K_5%
+V1.25S_PEG
R127 24.9_1%
U509-3
INV_PWM_3
R118 OPEN
LCM_BKLTEN
R123 100K_1%
LCM_DDCPCLK
LCM_DDCPDATA
LCM_3S_VDDEN
R126 100K_1%
R128 2.4K_1%
LVDS_TXCLN
LVDS_TXCLP
LVDS_TXCUN
LVDS_TXCUP
LVDS_TXDL0N
LVDS_TXDL1N
LVDS_TXDL2N
LVDS_TXDL0P
LVDS_TXDL1P
LVDS_TXDL2P
LVDS_TXDU0N
LVDS_TXDU1N
LVDS_TXDU2N
LVDS_TXDU0P
LVDS_TXDU1P
LVDS_TXDU2P
LVDS
PCI-EXPRESS GRAPHICS
PEG_C_RXN(1)
PEG_C_RXP(1)
PEG_C_TXN(0)
PEG_C_TXN(1)
PEG_C_TXN(2)
PEG_C_TXN(3)
PEG_C_TXP(0)
PEG_C_TXP(1)
PEG_C_TXP(2)
PEG_C_TXP(3)
C671 0.1uF_10v
C669 0.1uF_10v
C144 0.1uF_10v
C667 0.1uF_10v
C672 0.1uF_10v
C670 0.1uF_10v
C125 0.1uF_10v
C668 0.1uF_10v
PEG_TXN(0)
PEG_TXN(1)
PEG_TXN(2)
PEG_TXN(3)
PEG_TXP(0)
PEG_TXP(1)
PEG_TXP(2)
PEG_TXP(3)
SVID_LUMA
SVID_CHROMA
R85 75_1%
TV
CRTB
CRTG
CRTR
VGA
CRT_DDCCLK
CRT_DDCDATA
CRT_HSYNC
CRT_VSYNC
R121 30_5%
R122 30_5%
1.3K_0.5% R601
R90 75_1%
R93 75_1%
R88 120_1%
R95 120_1%
R92 120_1%
CLOSE TO CALISTOGA
ITL_CRESTLINE_FCBGA_TSB_1299P
INVENTEC
TITLE
PT10SC Crestline-2
SIZE A3
CODE CS
DOC. NUMBER Model_No
REV X01
SHEET 20 OF 63
CHANGE by IEC951098
12-Sep-2007

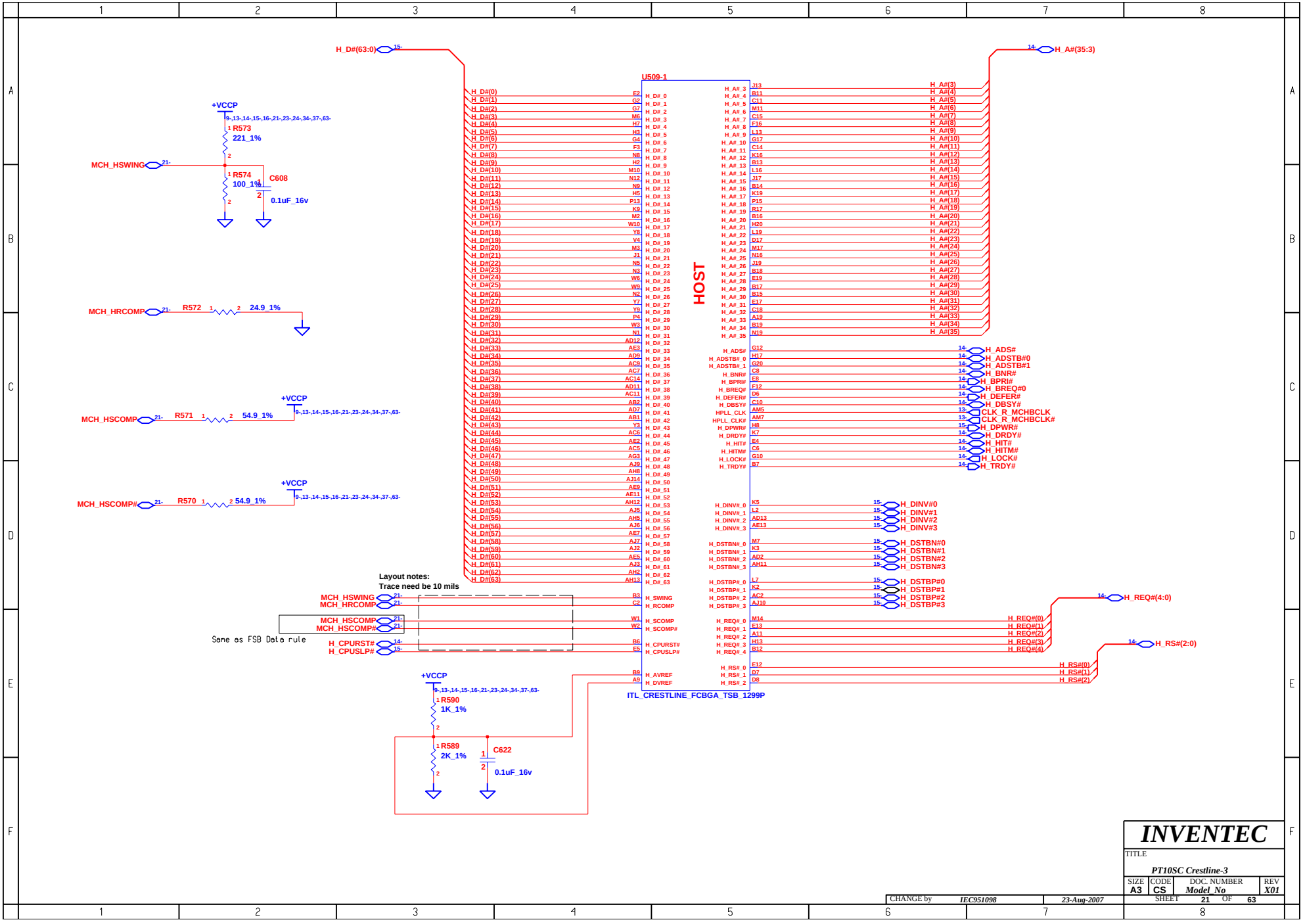
U509-1
HOST
ITL_CRESTLINE_FCBGA_TSB_1299P
H_D#(63:0)
H_A#(35:3)
H_REQ#(4:0)
H_RS#(2:0)
+VCCP
R573 221_1%
R574 100_1%
C608 0.1uF_16v
MCH_HSWING
MCH_HRCOMP
R572 24.9_1%
MCH_HSCOMP
R571 54.9_1%
MCH_HSCOMP#
R570 54.9_1%
Layout notes:
Trace need be 10 mils
MCH_HSWING
MCH_HRCOMP
MCH_HSCOMP
MCH_HSCOMP#
Same as FSB Data rule
H_CPURST#
H_CPUSLP#
R590 1K_1%
R589 2K_1%
C622 0.1uF_16v
H_ADS#
H_ADSTB#_0
H_ADSTB#_1
H_BNR#
H_BPRI#
H_BREQ#0
H_DEFER#
H_DBSY#
CLK_R_MCHBCLK
CLK_R_MCHBCLK#
H_DPWR#
H_DRDY#
H_HIT#
H_HITM#
H_LOCK#
H_TRDY#
H_DINV#0
H_DINV#1
H_DINV#2
H_DINV#3
H_DSTBN#0
H_DSTBN#1
H_DSTBN#2
H_DSTBN#3
H_DSTBP#0
H_DSTBP#1
H_DSTBP#2
H_DSTBP#3
INVENTEC
TITLE
PT10SC Crestline-3
SIZE A3
CODE CS
DOC. NUMBER Model_No
REV X01
SHEET 21 OF 63
CHANGE by IEC951098
23-Aug-2007

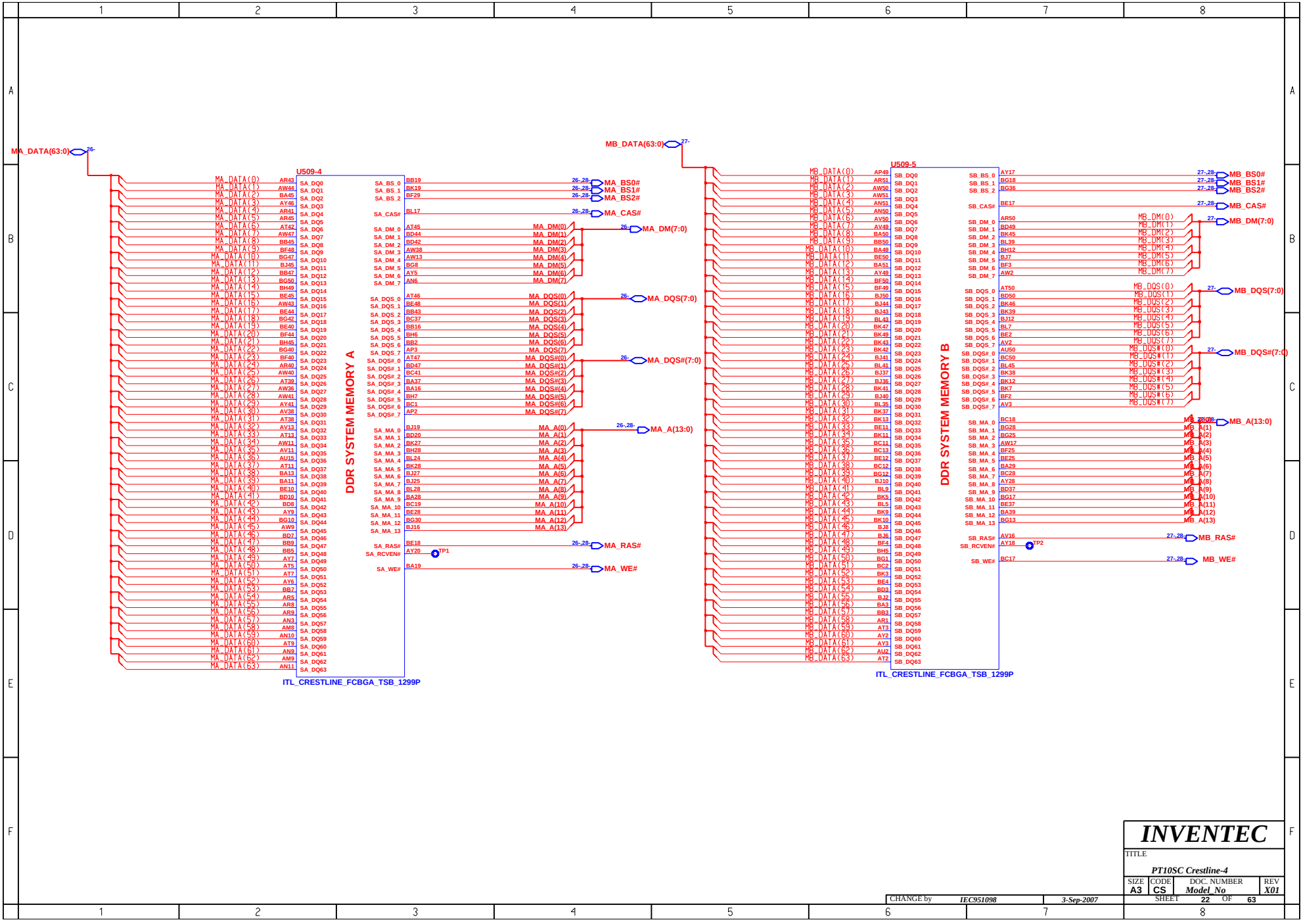

CHANGE by	IEC951098	3-Sep-2007	

INVENTEC

TITLE: *PT10SC Crestline-4*

SIZE	CODE	DOC. NUMBER	REV
A3	CS	*Model_No*	*X01*

SHEET 22 OF 63

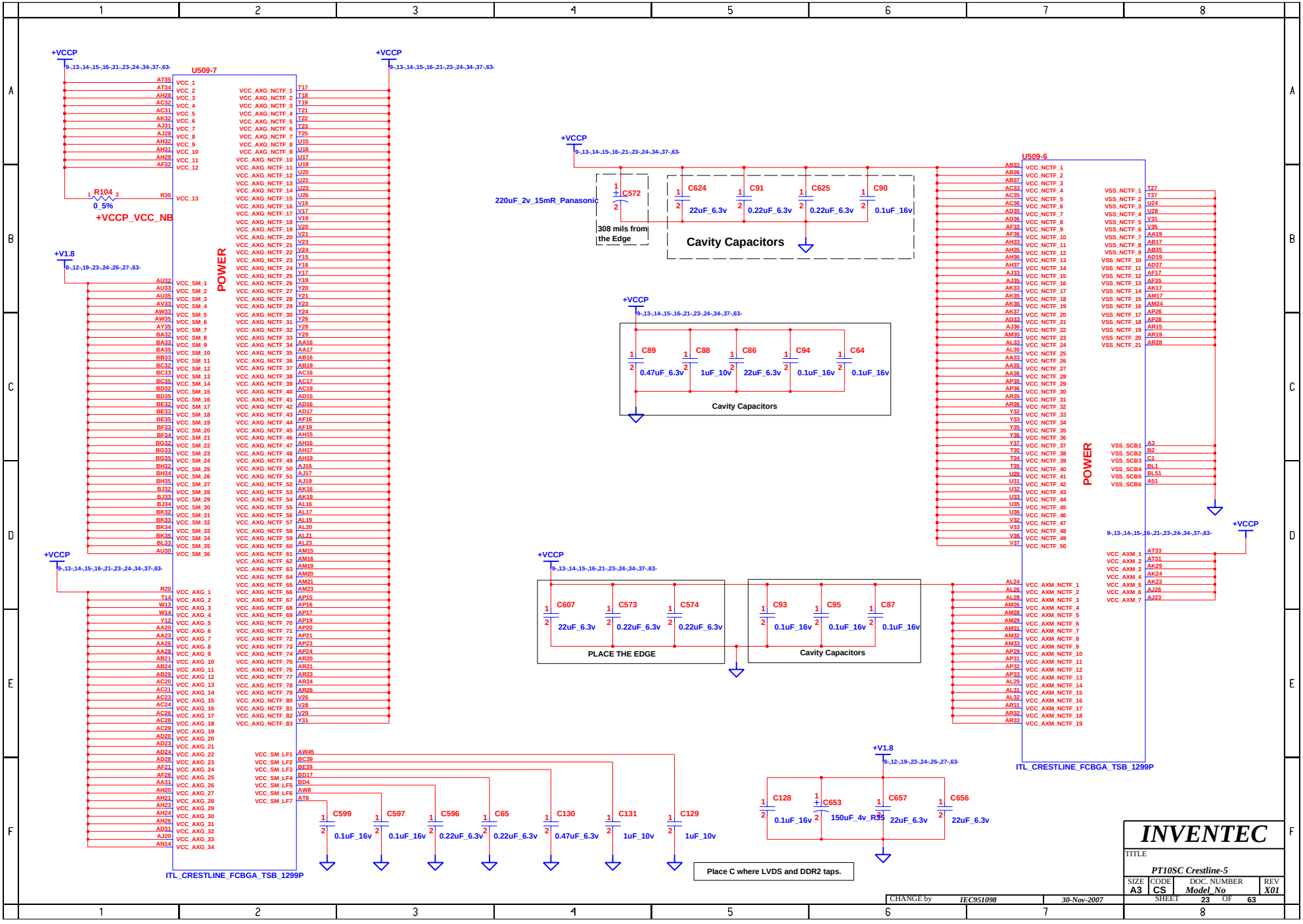
U509-7
POWER
ITL_CRESTLINE_FCBGA_TSB_1299P
+VCCP
+VCCP_VCC_NB
R104
0_5%
+V1.8
U509-6
POWER
ITL_CRESTLINE_FCBGA_TSB_1299P
220uF_2v_15mR_Panasonic
C572
308 mils from the Edge
C624
22uF_6.3v
C91
0.22uF_6.3v
C625
0.22uF_6.3v
C90
0.1uF_16v
Cavity Capacitors
C89
0.47uF_6.3v
C88
1uF_10v
C86
22uF_6.3v
C94
0.1uF_16v
C64
0.1uF_16v
Cavity Capacitors
C607
22uF_6.3v
C573
0.22uF_6.3v
C574
0.22uF_6.3v
PLACE THE EDGE
C93
0.1uF_16v
C95
0.1uF_16v
C87
0.1uF_16v
Cavity Capacitors
C599
0.1uF_16v
C597
0.1uF_16v
C596
0.22uF_6.3v
C65
0.22uF_6.3v
C130
0.47uF_6.3v
C131
1uF_10v
C129
1uF_10v
C128
0.1uF_16v
C653
150uF_4v_R35
C657
22uF_6.3v
C656
22uF_6.3v
Place C where LVDS and DDR2 taps.
INVENTEC
TITLE
PT10SC Crestline-5
SIZE A3
CODE CS
DOC. NUMBER Model_No
REV X01
SHEET 23 OF 63
CHANGE by IEC951098
30-Nov-2007

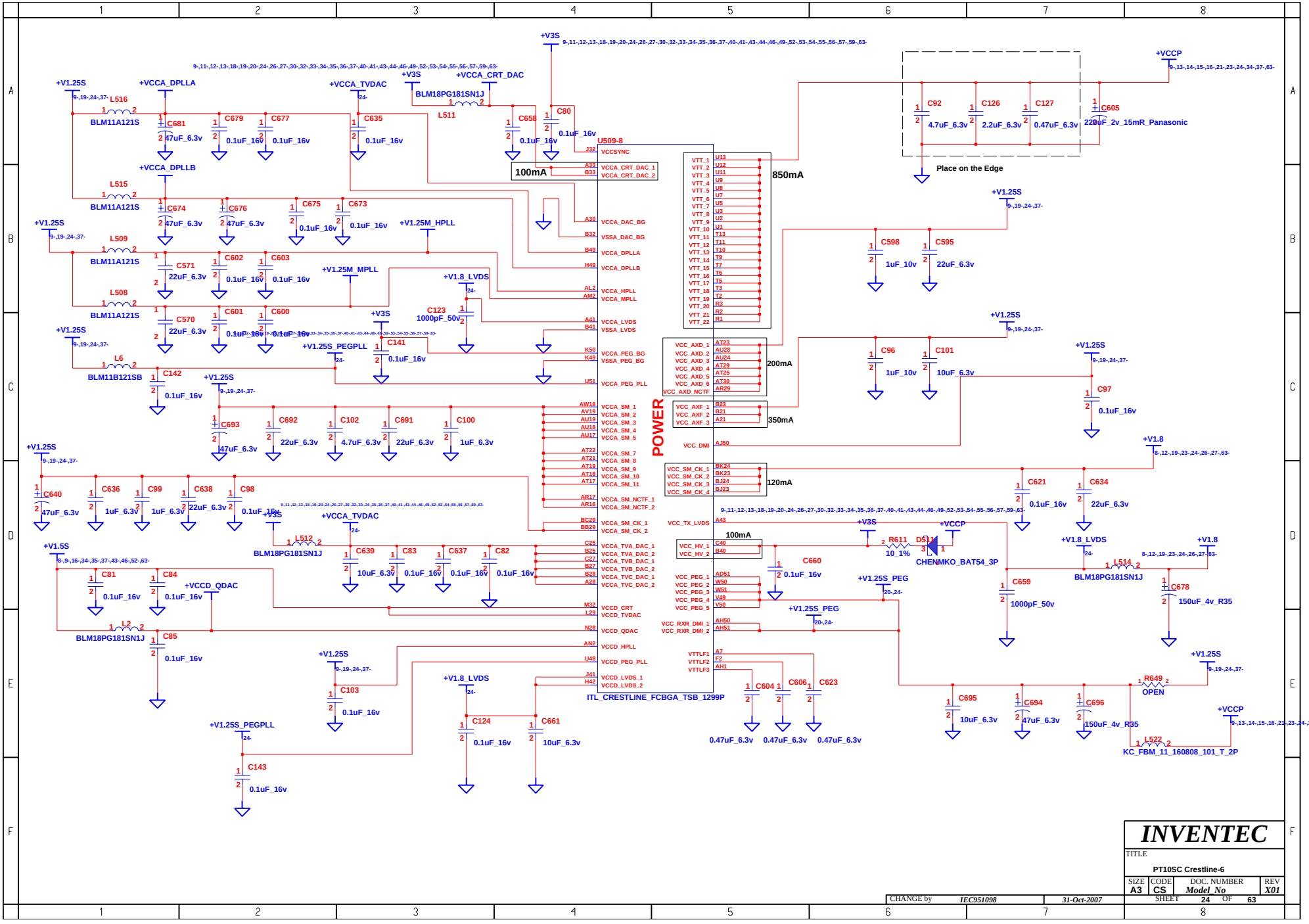
POWER
U509-8
ITL_CRESTLINE_FCBGA_TSB_1299P
100mA
850mA
200mA
350mA
120mA
100mA
Place on the Edge
+V3S
+VCCP
+V1.25S
+VCCA_DPLLA
+VCCA_DPLLB
+VCCA_TVDAC
+VCCA_CRT_DAC
+V1.25M_HPLL
+V1.25M_MPLL
+V1.8_LVDS
+V1.25S_PEGPLL
+V1.8
+V1.5S
+VCCD_QDAC
+V1.25S_PEG
L516
L515
L509
L508
L6
L511
L512
L514
L522
BLM11A121S
BLM11B121SB
BLM18PG181SN1J
KC_FBM_11_160808_101_T_2P
C605
220uF_2v_15mR_Panasonic
R611
10_1%
D511
CHENMKO_BAT54_3P
R649
OPEN
C678
150uF_4v_R35
C696
150uF_4v_R35
C660
C659
1000pF_50v
C123
1000pF_50v
C141
0.1uF_16v
C142
0.1uF_16v
C143
0.1uF_16v
C124
0.1uF_16v
C661
10uF_6.3v
C604
0.47uF_6.3v
C606
0.47uF_6.3v
C623
0.47uF_6.3v
C695
10uF_6.3v
C694
47uF_6.3v
C103
0.1uF_16v
C639
10uF_6.3v
C640
47uF_6.3v
C681
47uF_6.3v
C674
47uF_6.3v
C676
47uF_6.3v
C571
22uF_6.3v
C570
22uF_6.3v
C693
47uF_6.3v
C692
22uF_6.3v
C102
4.7uF_6.3v
C691
22uF_6.3v
C100
1uF_6.3v
C636
1uF_6.3v
C99
1uF_6.3v
C638
22uF_6.3v
C98
0.1uF_16v
C92
4.7uF_6.3v
C126
2.2uF_6.3v
C127
0.47uF_6.3v
C598
1uF_10v
C595
22uF_6.3v
C96
1uF_10v
C101
10uF_6.3v
C97
0.1uF_16v
C621
0.1uF_16v
C634
22uF_6.3v
C679
0.1uF_16v
C677
0.1uF_16v
C635
0.1uF_16v
C658
0.1uF_16v
C80
0.1uF_16v
C675
0.1uF_16v
C673
0.1uF_16v
C602
0.1uF_16v
C603
0.1uF_16v
C601
0.1uF_16v
C600
0.1uF_16v
C83
0.1uF_16v
C637
0.1uF_16v
C82
0.1uF_16v
C81
0.1uF_16v
C84
0.1uF_16v
C85
0.1uF_16v
C8
0.1uF_16v
C514
BLM18PG181SN1J
C522
INVENTEC
TITLE
PT10SC Crestline-6
SIZE A3
CODE CS
DOC. NUMBER Model_No
REV X01
SHEET 24 OF 63
CHANGE by IEC951098
31-Oct-2007

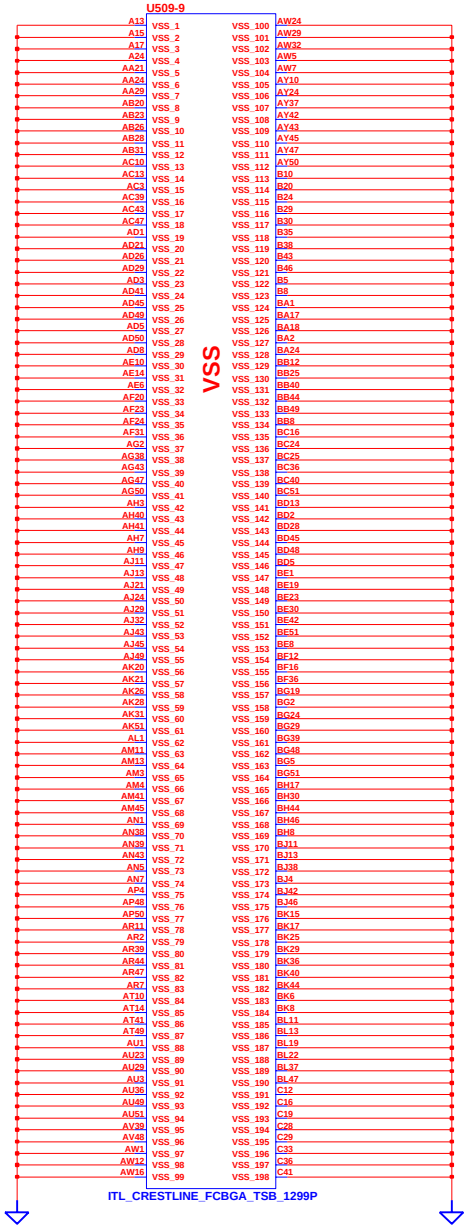

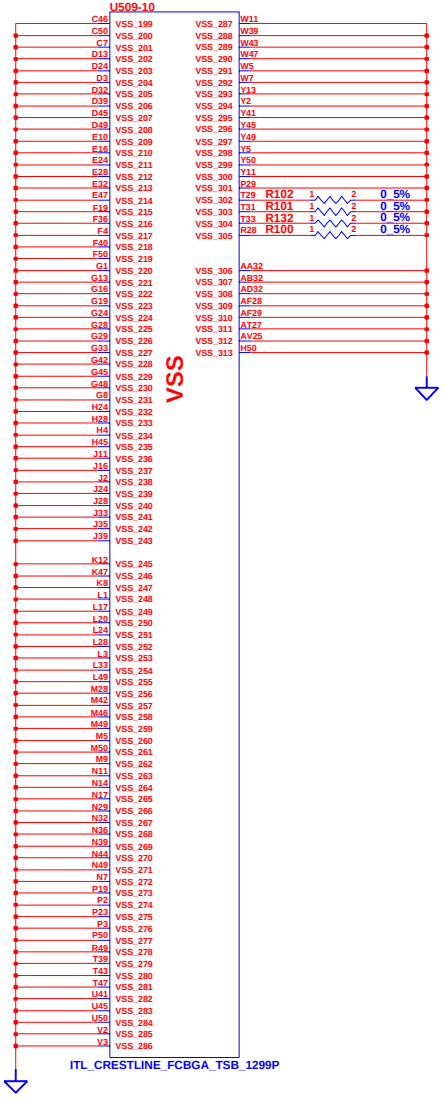

CHANGE by	IEC951098	31-Jul-2007	

INVENTEC

TITLE: *PT10SC Crestline-7*

SIZE	CODE	DOC. NUMBER	REV
A3	CS	*Model_No*	*X01*

SHEET 25 OF 63

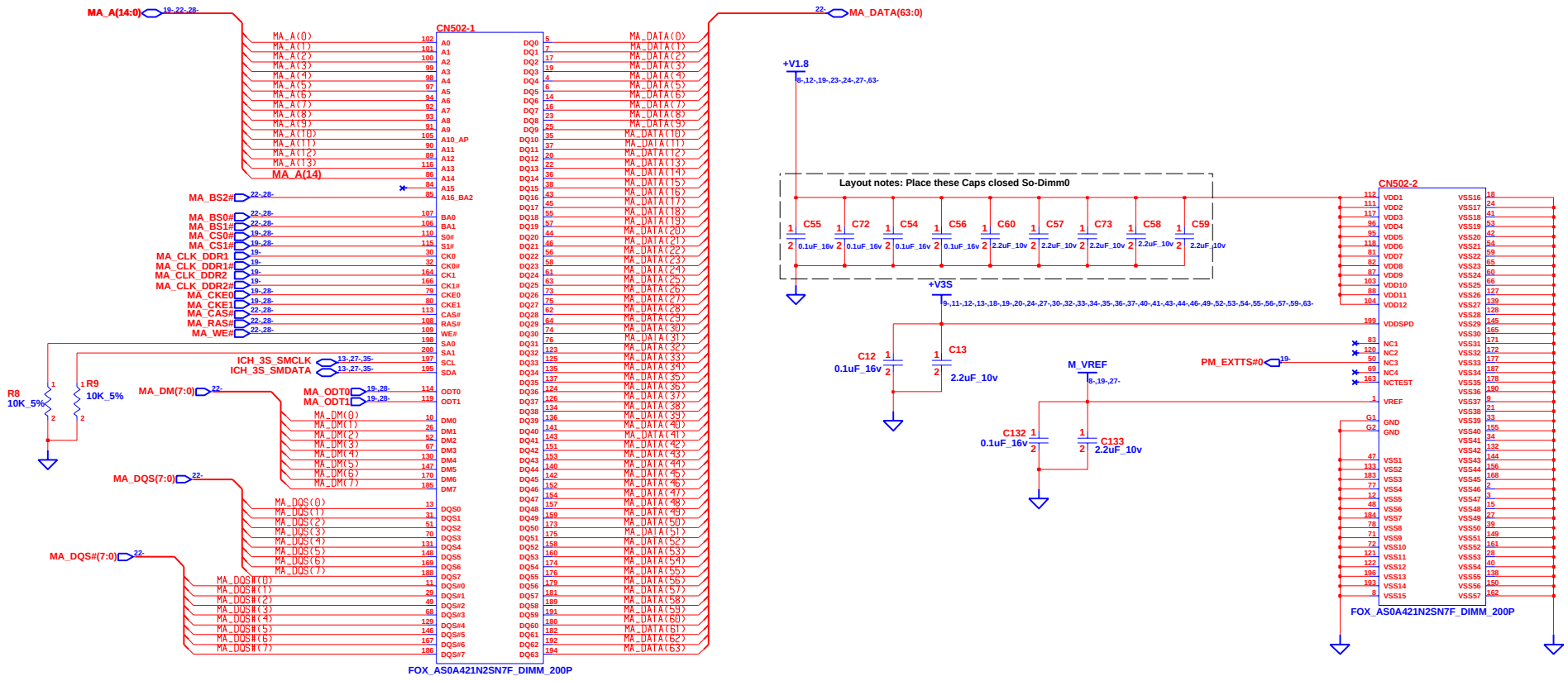

SO DIMM0

Slot A

INVENTEC			
TITLE	PT10SC DDR2-DIMM-0		
SIZE A3	CODE CS	DOC. NUMBER Model_No	REV X01
CHANGE by IEC951098	6-Nov-2007	SHEET 26 OF 63	

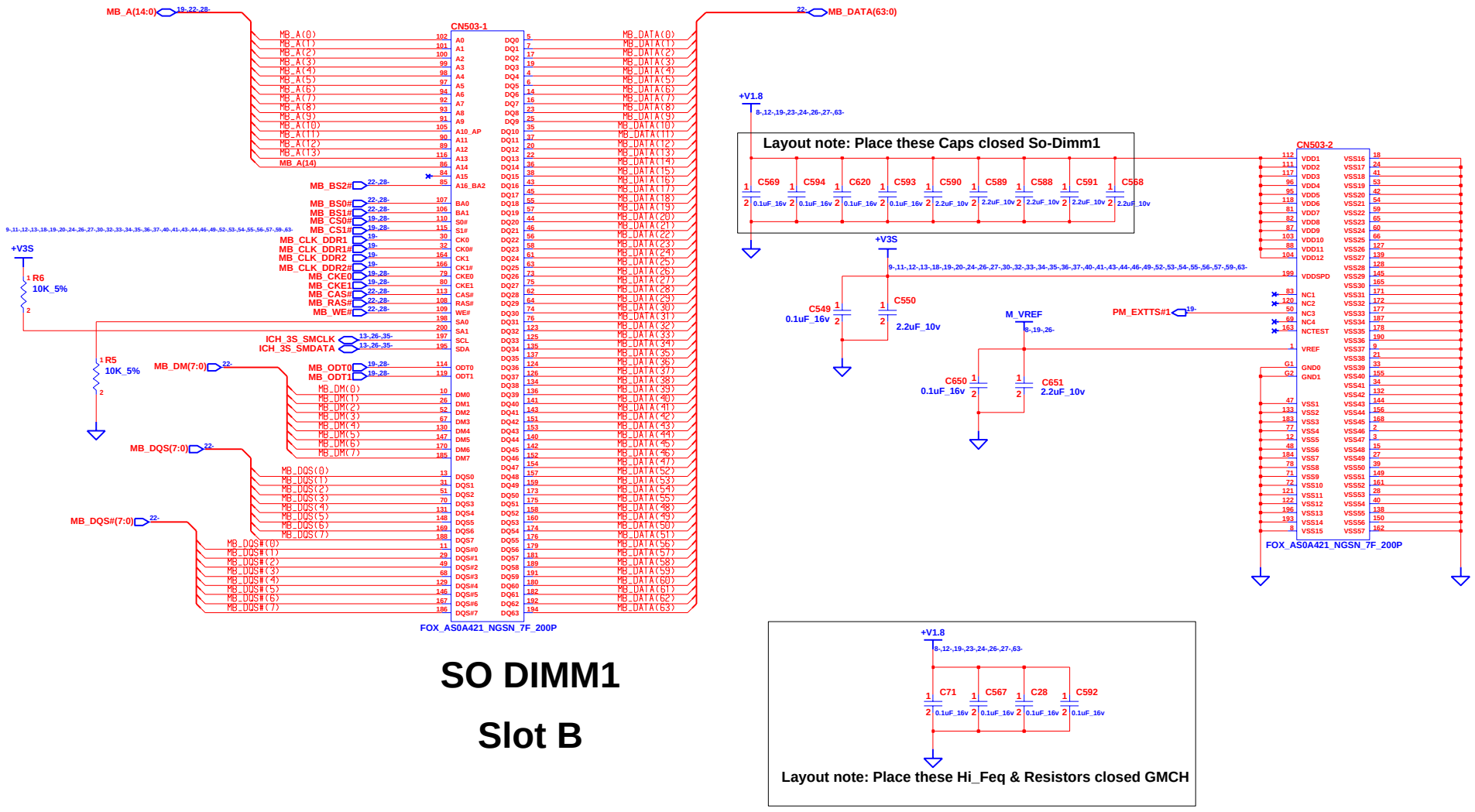

SO DIMM1

Slot B

INVENTEC			
TITLE	PT10SC DDR2-DIMM-1		
SIZE A3	CODE CS	DOC. NUMBER Model_No	REV X01
CHANGE by IEC951098	6-Nov-2007	SHEET 27 OF 63	

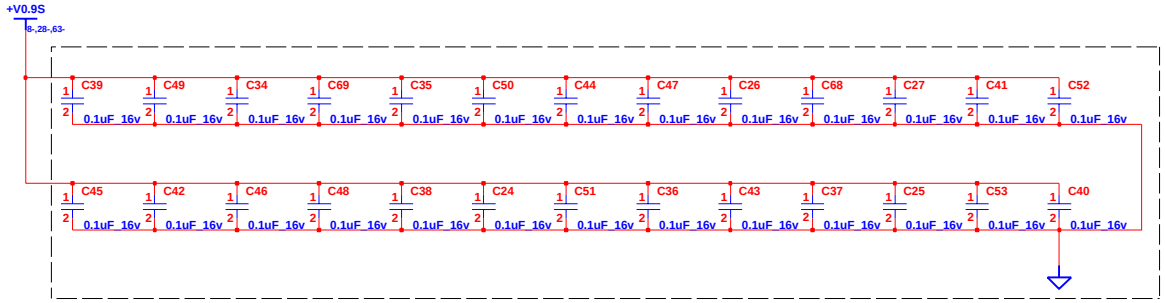

LAYOUT NOTES : PLACE ONE CAP CLOSE TO EVERY 2 PULL UP RESISTOR TERMINATED TO +V0.9S

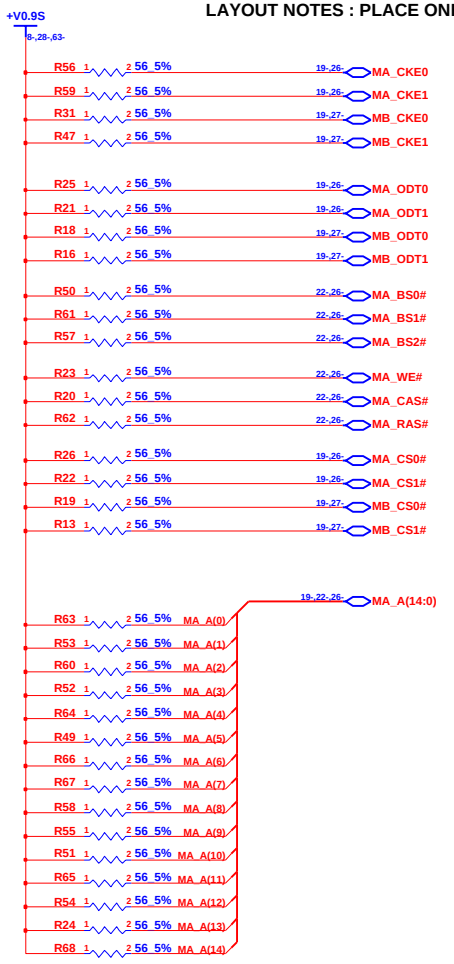

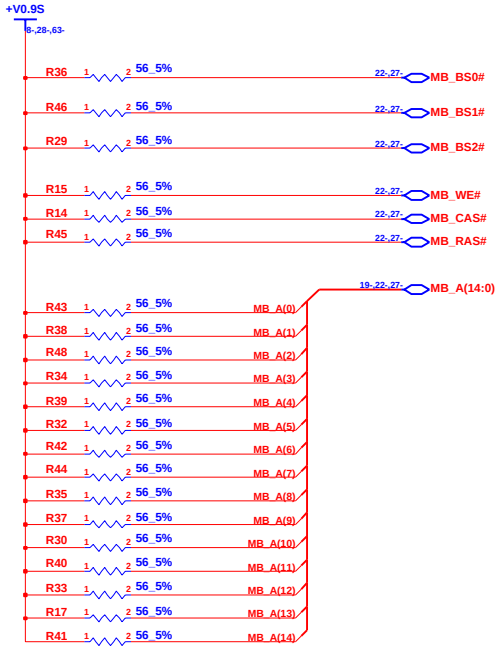

CHANGE by	IEC951098	31-Jul-2007	

INVENTEC

TITLE: PT10SC DDR2-DAMPING

SIZE	CODE	DOC. NUMBER	REV
A3	CS	Model_No	X01

SHEET 28 OF 63

BLANK

CHANGE by	IEC951098	30-Nov-2007	

INVENTEC

TITLE

PT10SC MXM CONN

SIZE	CODE	DOC. NUMBER	REV
A3	CS	Model_No	X01

SHEET 29 OF 63

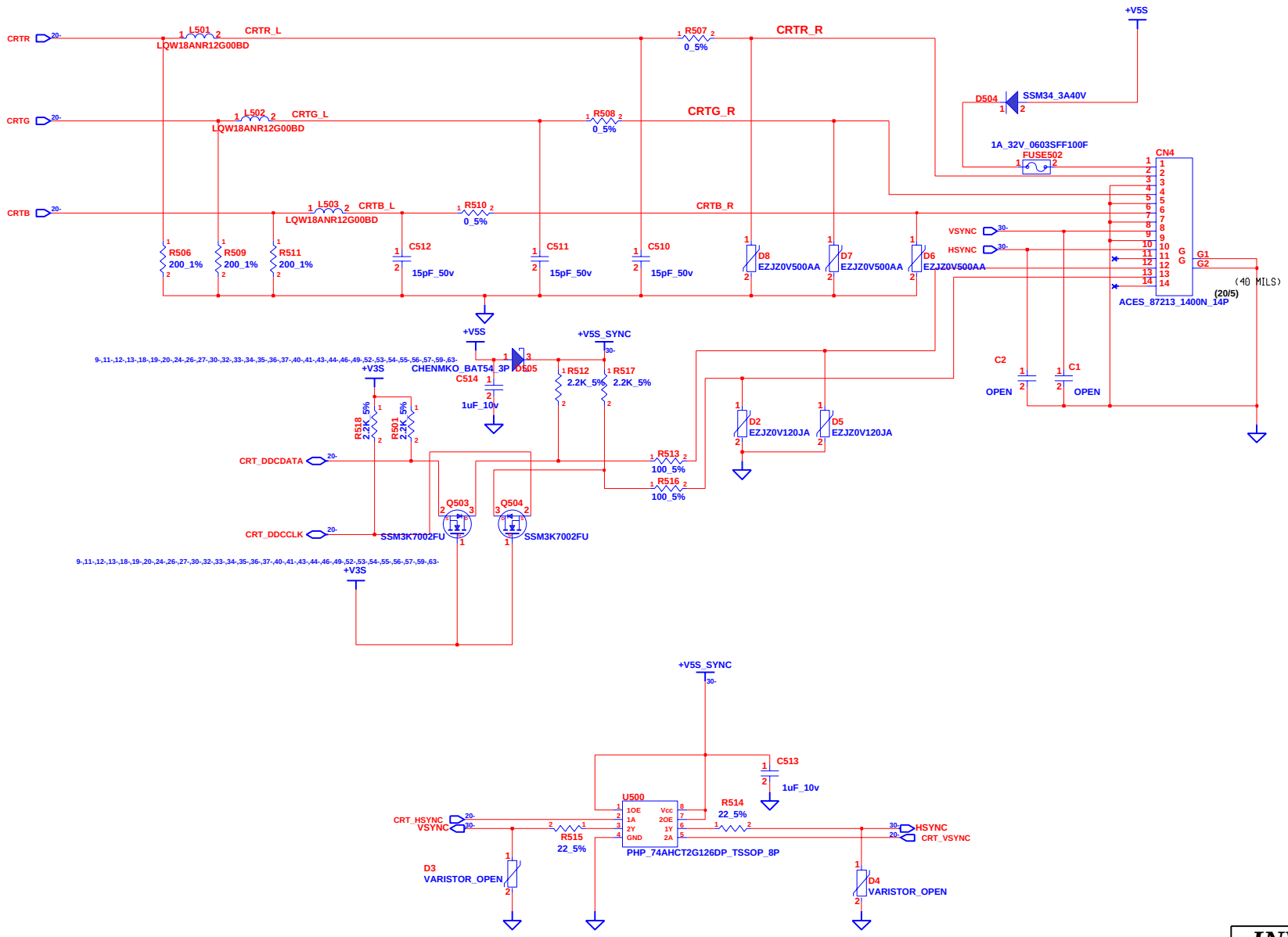

INVENTEC

TITLE

PT10SC RGB CONNECTOR

SIZE	CODE	DOC. NUMBER	REV
A3	CS	Model_No	X01

SHEET 30 OF 63

CHANGE by	IEC951098	1-Nov-2007

BLANK

CHANGE by	IEC951098	30-Nov-2007		

INVENTEC

TITLE

PT10SC S-Video CONN

SIZE	CODE	DOC. NUMBER	REV
A3	CS	Model_No	X01

SHEET 31 OF 63

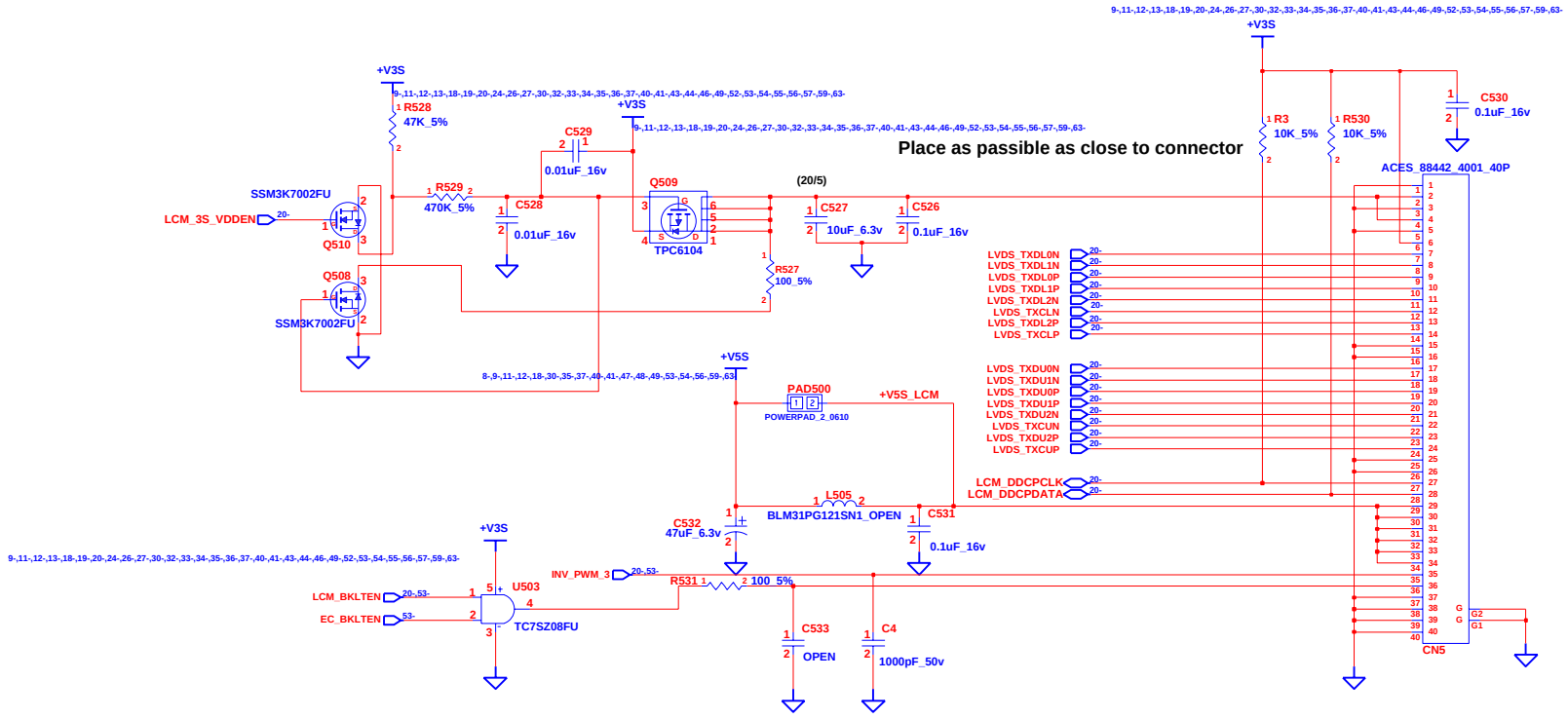

INVENTEC			
TITLE	PT10SC LCM		
SIZE A3	CODE CS	DOC. NUMBER Model_No	REV X01
CHANGE by IEC951098	27-Sep-2003	SHEET 32 OF 63	

HDMI TRANSMITTER

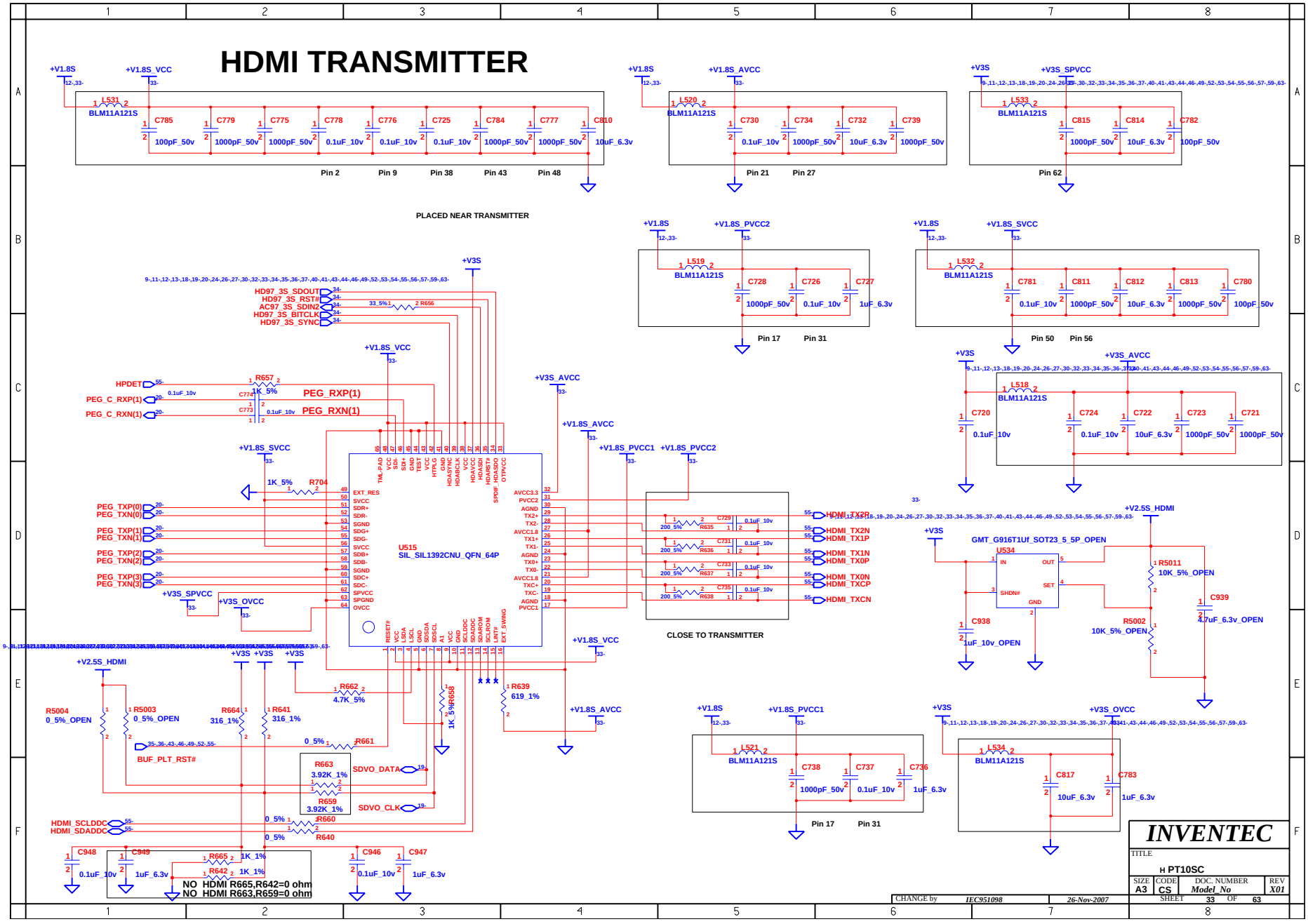

INVENTEC

TITLE

H PT10SC

SIZE	CODE	DOC. NUMBER	REV
A3	CS	Model_No	X01

CHANGE by IEC951098 26-Nov-2007

SHEET 33 OF 63

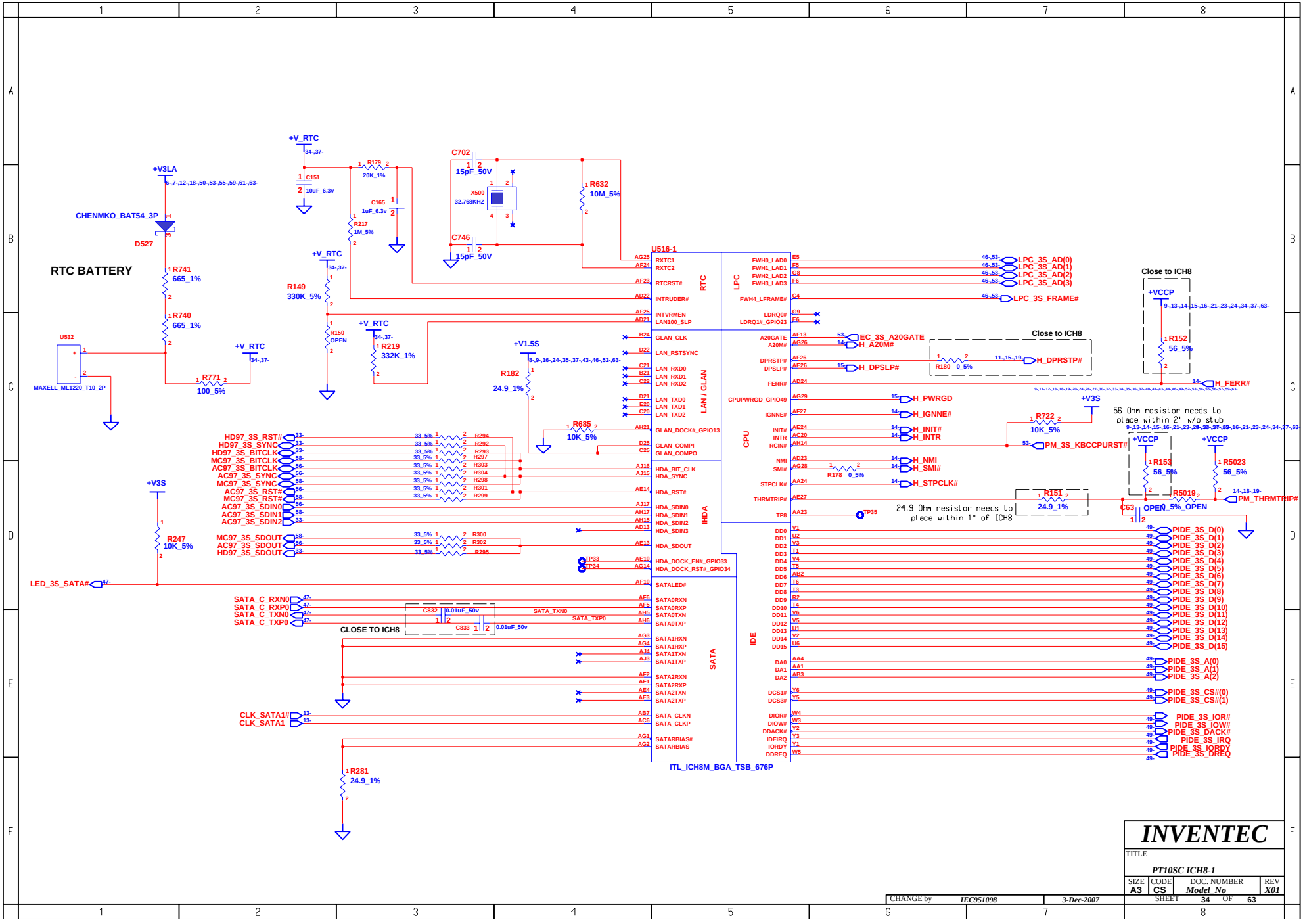
RTC BATTERY
CHENMKO_BAT54_3P
D527
+V3LA
R741 665_1%
R740 665_1%
R771 100_5%
U532
MAXELL_ML1220_T10_2P
+V_RTC
C151 10uF_6.3v
R179 20K_1%
C165 1uF_6.3v
R217 1M_5%
R149 330K_5%
R150 OPEN
R219 332K_1%
C702 15pF_50V
C746 15pF_50V
X500 32.768KHZ
R632 10M_5%
+V1.5S
R182 24.9_1%
R685 10K_5%
U516-1
RTC
LAN / GLAN
IHDA
SATA
LPC
CPU
IDE
ITL_ICH8M_BGA_TSB_676P
LPC_3S_AD(0)
LPC_3S_AD(1)
LPC_3S_AD(2)
LPC_3S_AD(3)
LPC_3S_FRAME#
EC_3S_A20GATE
H_A20M#
H_DPSLP#
H_DPRSTP#
H_FERR#
H_PWRGD
H_IGNNE#
H_INIT#
H_INTR
H_NMI
H_SMI#
H_STPCLK#
PM_3S_KBCCPURST#
PM_THRMTRIP#
Close to ICH8
+VCCP
R152 56_5%
R180 0_5%
R722 10K_5%
+V3S
56 Ohm resistor needs to place within 2" w/o stub
R153 56_5%
R5023 56_5%
R5019 0_5%_OPEN
C63 OPEN
R151 24.9_1%
24.9 Ohm resistor needs to place within 1" of ICH8
R178 0_5%
TP35
HD97_3S_RST#
HD97_3S_SYNC
HD97_3S_BITCLK
MC97_3S_BITCLK
AC97_3S_BITCLK
AC97_3S_SYNC
MC97_3S_SYNC
AC97_3S_RST#
MC97_3S_RST#
AC97_3S_SDIN0
AC97_3S_SDIN1
AC97_3S_SDIN2
MC97_3S_SDOUT
AC97_3S_SDOUT
HD97_3S_SDOUT
R247 10K_5%
LED_3S_SATA#
SATA_C_RXN0
SATA_C_RXP0
SATA_C_TXN0
SATA_C_TXP0
C832 0.01uF_50v
C833 0.01uF_50v
SATA_TXN0
SATA_TXP0
CLOSE TO ICH8
CLK_SATA1#
CLK_SATA1
R281 24.9_1%
PIDE_3S_D(0)
PIDE_3S_D(1)
PIDE_3S_D(2)
PIDE_3S_D(3)
PIDE_3S_D(4)
PIDE_3S_D(5)
PIDE_3S_D(6)
PIDE_3S_D(7)
PIDE_3S_D(8)
PIDE_3S_D(9)
PIDE_3S_D(10)
PIDE_3S_D(11)
PIDE_3S_D(12)
PIDE_3S_D(13)
PIDE_3S_D(14)
PIDE_3S_D(15)
PIDE_3S_A(0)
PIDE_3S_A(1)
PIDE_3S_A(2)
PIDE_3S_CS#(0)
PIDE_3S_CS#(1)
PIDE_3S_IOR#
PIDE_3S_IOW#
PIDE_3S_DACK#
PIDE_3S_IRQ
PIDE_3S_IORDY
PIDE_3S_DREQ
INVENTEC
TITLE
PT10SC ICH8-1
SIZE A3
CODE CS
DOC. NUMBER Model_No
REV X01
CHANGE by IEC951098
3-Dec-2007
SHEET 34 OF 63

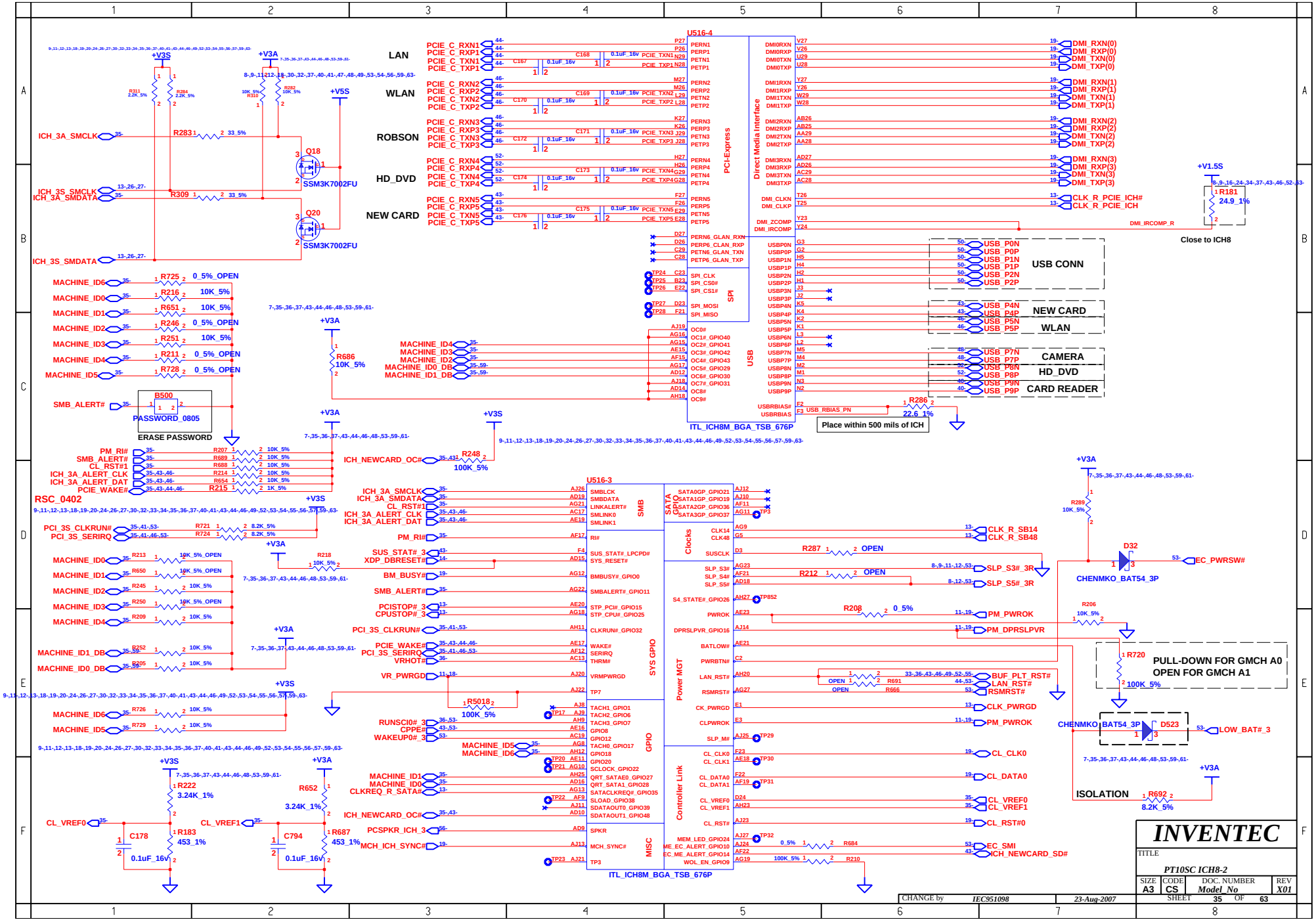
U516-4
LAN
WLAN
ROBSON
HD_DVD
NEW CARD
PCIE_C_RXN1
PCIE_C_RXP1
PCIE_C_TXN1
PCIE_C_TXP1
PCIE_C_RXN2
PCIE_C_RXP2
PCIE_C_TXN2
PCIE_C_TXP2
PCIE_C_RXN3
PCIE_C_RXP3
PCIE_C_TXN3
PCIE_C_TXP3
PCIE_C_RXN4
PCIE_C_RXP4
PCIE_C_TXN4
PCIE_C_TXP4
PCIE_C_RXN5
PCIE_C_RXP5
PCIE_C_TXN5
PCIE_C_TXP5
PCI-Express
Direct Media Interface
DMI_RXN(0)
DMI_RXP(0)
DMI_TXN(0)
DMI_TXP(0)
DMI_RXN(1)
DMI_RXP(1)
DMI_TXN(1)
DMI_TXP(1)
DMI_RXN(2)
DMI_RXP(2)
DMI_TXN(2)
DMI_TXP(2)
DMI_RXN(3)
DMI_RXP(3)
DMI_TXN(3)
DMI_TXP(3)
CLK_R_PCIE_ICH#
CLK_R_PCIE_ICH
DMI_IRCOMP_R
+V1.5S
R181
24.9_1%
Close to ICH8
USB CONN
NEW CARD
WLAN
CAMERA
HD_DVD
CARD READER
USB_P0N
USB_P0P
USB_P1N
USB_P1P
USB_P2N
USB_P2P
USB_P4N
USB_P4P
USB_P5N
USB_P5P
USB_P7N
USB_P7P
USB_P8N
USB_P8P
USB_P9N
USB_P9P
USB_RBIAS_PN
R286
22.6_1%
Place within 500 mils of ICH
ITL_ICH8M_BGA_TSB_676P
SPI
USB
+V3S
+V3A
+V5S
ICH_3A_SMCLK
ICH_3S_SMCLK
ICH_3A_SMDATA
ICH_3S_SMDATA
R283
33_5%
R309
33_5%
Q18
Q20
SSM3K7002FU
MACHINE_ID6
MACHINE_ID0
MACHINE_ID1
MACHINE_ID2
MACHINE_ID3
MACHINE_ID4
MACHINE_ID5
R725
0_5%_OPEN
R216
10K_5%
R651
10K_5%
R246
0_5%_OPEN
R251
10K_5%
R211
0_5%_OPEN
R728
0_5%_OPEN
R686
10K_5%
MACHINE_ID4_DB
MACHINE_ID3_DB
MACHINE_ID2_DB
MACHINE_ID0_DB
MACHINE_ID1_DB
SMB_ALERT#
B500
PASSWORD_0805
ERASE PASSWORD
PM_RI#
SMB_ALERT#
CL_RST#1
ICH_3A_ALERT_CLK
ICH_3A_ALERT_DAT
PCIE_WAKE#
RSC_0402
ICH_NEWCARD_OC#
R248
100K_5%
PCI_3S_CLKRUN#
PCI_3S_SERIRQ
R721
8.2K_5%
R724
8.2K_5%
R213
10K_5%_OPEN
R650
10K_5%_OPEN
R245
10K_5%
R250
10K_5%_OPEN
R209
10K_5%
R218
10K_5%
R252
10K_5%
R205
10K_5%
R726
10K_5%
R729
10K_5%
R222
3.24K_1%
R652
3.24K_1%
R183
453_1%
R687
453_1%
C178
0.1uF_16V
C794
0.1uF_16V
CL_VREF0
CL_VREF1
U516-3
SMB
SATA GPIO
Clocks
Power MGT
SYS GPIO
GPIO
Controller Link
MISC
SMBLCK
SMBDATA
LINKALERT#
SMLINK0
SMLINK1
RI#
SUS_STAT# LPCPD#
SYS_RESET#
BMBUSY#_GPIO0
SMBALERT#_GPIO11
STP_PCI#_GPIO15
STP_CPU#_GPIO25
CLKRUN#_GPIO32
WAKE#
SERIRQ
THRM#
VRMPWRGD
TP7
TACH1_GPIO1
TACH2_GPIO6
TACH3_GPIO7
GPIO8
GPIO12
TACH0_GPIO17
GPIO18
GPIO20
SCLOCK_GPIO22
QRT_SATAE0_GPIO27
QRT_SATA1_GPIO28
SATACLKREQ#_GPIO35
SLOAD_GPIO38
SDATAOUT0_GPIO39
SDATAOUT1_GPIO48
SPKR
MCH_SYNC#
TP3
SATA0GP_GPIO21
SATA1GP_GPIO19
SATA2GP_GPIO36
SATA3GP_GPIO37
CLK14
CLK48
SUSCLK
SLP_S3#
SLP_S4#
SLP_S5#
S4_STATE#_GPIO26
PWROK
DPRSLPVR_GPIO16
BATLOW#
PWRBTN#
LAN_RST#
RSMRST#
CK_PWRGD
CLPWROK
SLP_M#
CL_CLK0
CL_CLK1
CL_DATA0
CL_DATA1
CL_VREF0
CL_VREF1
CL_RST#
MEM_LED_GPIO24
ME_EC_ALERT_GPIO10
EC_ME_ALERT_GPIO14
WOL_EN_GPIO9
CLK_R_SB14
CLK_R_SB48
R287
OPEN
R212
OPEN
SLP_S3#_3R
SLP_S5#_3R
R208
0_5%
PM_PWROK
PM_DPRSLPVR
R206
10K_5%
R720
100K_5%
PULL-DOWN FOR GMCH A0
OPEN FOR GMCH A1
BUF_PLT_RST#
LAN_RST#
RSMRST#
CLK_PWRGD
PM_PWROK
CL_CLK0
CL_DATA0
CL_VREF0
CL_VREF1
CL_RST#0
EC_SMI
ICH_NEWCARD_SD#
R691
R666
R684
R210
R5018
100K_5%
RUNSCI#_3
CPPE#
WAKEUP#_3
MACHINE_ID5
MACHINE_ID6
MACHINE_ID1
MACHINE_ID0
CLKREQ_R_SATA#
ICH_NEWCARD_OC#
PCSPKR_ICH_3
MCH_ICH_SYNC#
D32
CHENMKO_BAT54_3P
EC_PWRSW#
R289
10K_5%
D523
LOW_BAT#_3
ISOLATION
R692
8.2K_5%
INVENTEC
TITLE
PT10SC ICH8-2
SIZE A3
CODE CS
DOC. NUMBER Model_No
REV X01
SHEET 35 OF 63
CHANGE by IEC951098
23-Aug-2007

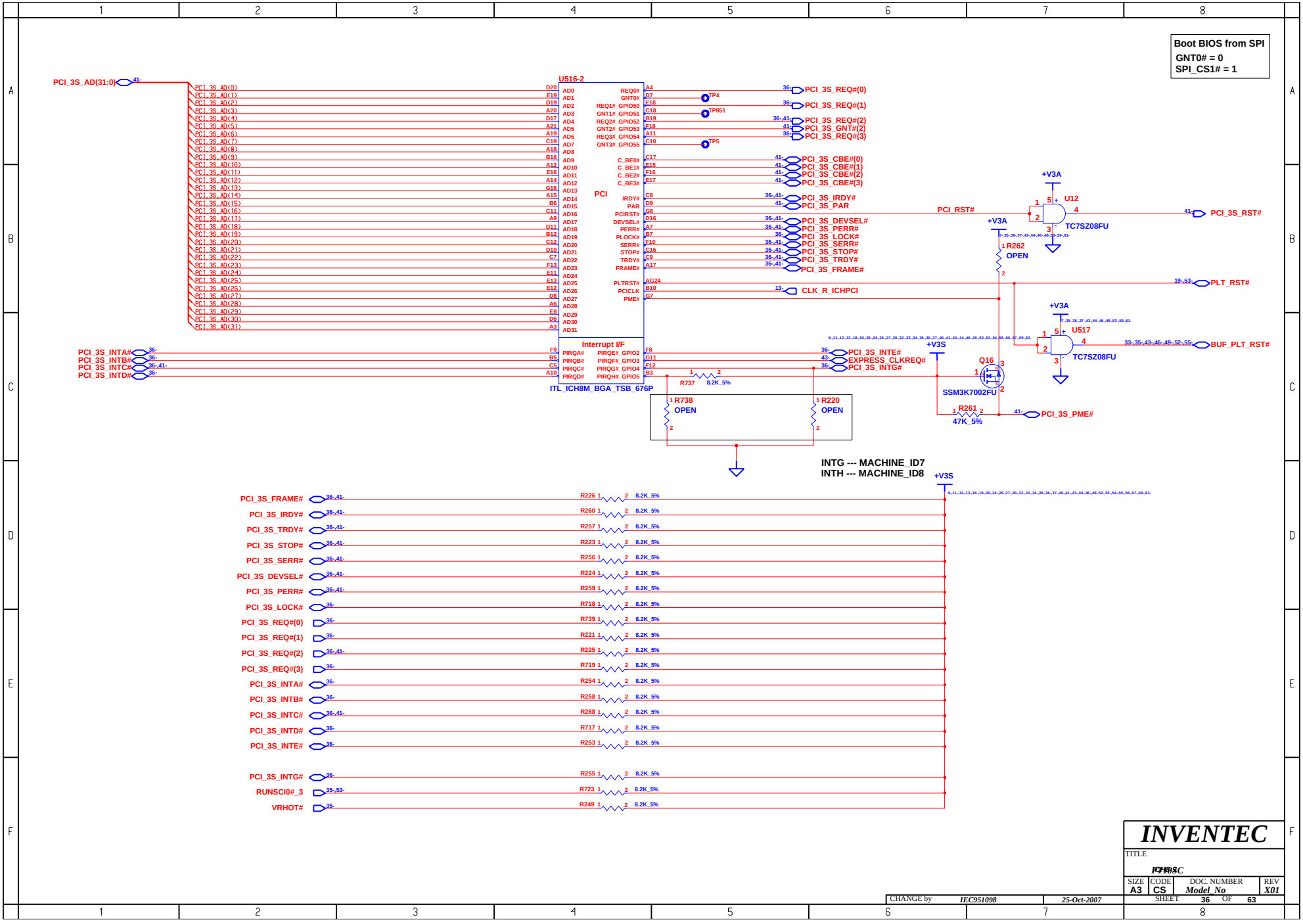
Boot BIOS from SPI
GNT0# = 0
SPI_CS1# = 1
U516-2
PCI
Interrupt I/F
ITL_ICH8M_BGA_TSB_676P
PCI_3S_AD(31:0)
PCI_3S_INTA#
PCI_3S_INTB#
PCI_3S_INTC#
PCI_3S_INTD#
PCI_3S_REQ#(0)
PCI_3S_REQ#(1)
PCI_3S_REQ#(2)
PCI_3S_GNT#(2)
PCI_3S_REQ#(3)
PCI_3S_CBE#(0)
PCI_3S_CBE#(1)
PCI_3S_CBE#(2)
PCI_3S_CBE#(3)
PCI_3S_IRDY#
PCI_3S_PAR
PCI_3S_DEVSEL#
PCI_3S_PERR#
PCI_3S_LOCK#
PCI_3S_SERR#
PCI_3S_STOP#
PCI_3S_TRDY#
PCI_3S_FRAME#
CLK_R_ICHPCI
PCI_3S_INTE#
EXPRESS_CLKREQ#
PCI_3S_INTG#
PCI_RST#
PCI_3S_RST#
PLT_RST#
BUF_PLT_RST#
PCI_3S_PME#
U12
TC7SZ08FU
U517
TC7SZ08FU
R262
OPEN
Q16
SSM3K7002FU
R261
47K_5%
R737
8.2K_5%
R738
OPEN
R220
OPEN
+V3A
+V3S
INTG --- MACHINE_ID7
INTH --- MACHINE_ID8
PCI_3S_FRAME#
PCI_3S_IRDY#
PCI_3S_TRDY#
PCI_3S_STOP#
PCI_3S_SERR#
PCI_3S_DEVSEL#
PCI_3S_PERR#
PCI_3S_LOCK#
PCI_3S_REQ#(0)
PCI_3S_REQ#(1)
PCI_3S_REQ#(2)
PCI_3S_REQ#(3)
PCI_3S_INTA#
PCI_3S_INTB#
PCI_3S_INTC#
PCI_3S_INTD#
PCI_3S_INTE#
PCI_3S_INTG#
RUNSCI0#_3
VRHOT#
8.2K_5%
INVENTEC
TITLE
ICH8C
SIZE A3
CODE CS
DOC. NUMBER Model_No
REV X01
SHEET 36 OF 63
CHANGE by IEC951098
25-Oct-2007

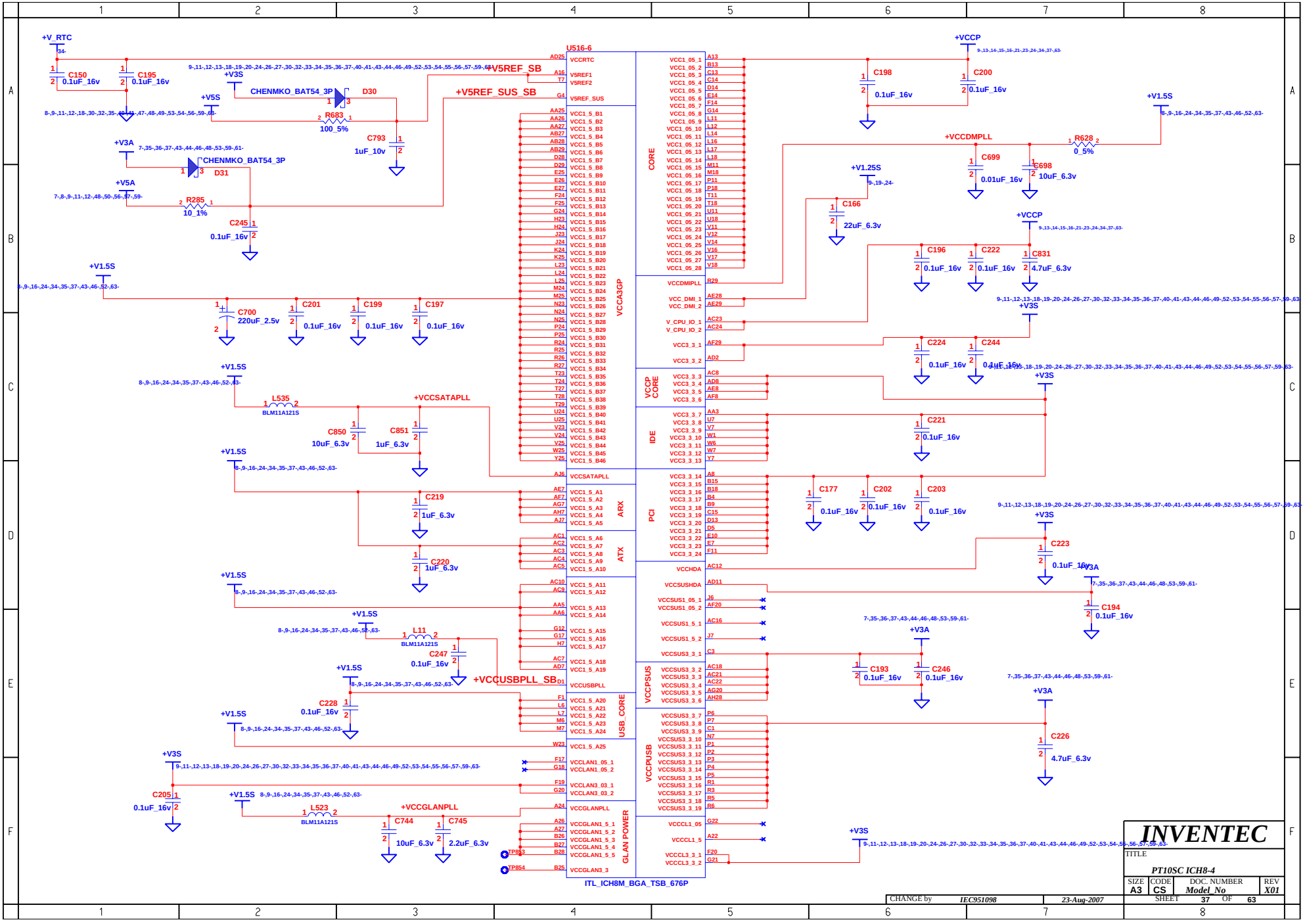
U516-6
ITL_ICH8M_BGA_TSB_676P
+V_RTC
C150 0.1uF_16v
C195 0.1uF_16v
+V5REF_SB
+V5REF_SUS_SB
CHENMKO_BAT54_3P
D30
R683 100_5%
C793 1uF_10v
+V3A
CHENMKO_BAT54_3P
D31
+V5A
R285 10_1%
C245 0.1uF_16v
+V1.5S
C700 220uF_2.5v
C201 0.1uF_16v
C199 0.1uF_16v
C197 0.1uF_16v
L535 BLM11A121S
+VCCSATAPLL
C850 10uF_6.3v
C851 1uF_6.3v
C219 1uF_6.3v
C220 1uF_6.3v
L11 BLM11A121S
C247 0.1uF_16v
+VCCUSBPLL_SB
C228 0.1uF_16v
C205 0.1uF_16v
L523 BLM11A121S
+VCCGLANPLL
C744 10uF_6.3v
C745 2.2uF_6.3v
TP853
TP854
+VCCP
C198 0.1uF_16v
C200 0.1uF_16v
+V1.5S
+VCCDMPLL
R628 0_5%
C699 0.01uF_16v
C698 10uF_6.3v
+V1.25S
C166 22uF_6.3v
C196 0.1uF_16v
C222 0.1uF_16v
C831 4.7uF_6.3v
C224 0.1uF_16v
C244 0.1uF_16v
C221 0.1uF_16v
C177 0.1uF_16v
C202 0.1uF_16v
C203 0.1uF_16v
C223 0.1uF_16v
C194 0.1uF_16v
C193 0.1uF_16v
C246 0.1uF_16v
C226 4.7uF_6.3v
CORE
VCCA3GP
VCCP CORE
IDE
PCI
ARX
ATX
USB_CORE
VCCPSUS
VCCPUSB
GLAN POWER
INVENTEC
TITLE
PT10SC ICH8-4
SIZE A3
CODE CS
DOC. NUMBER Model_No
REV X01
SHEET 37 OF 63
CHANGE by IEC951098
23-Aug-2007

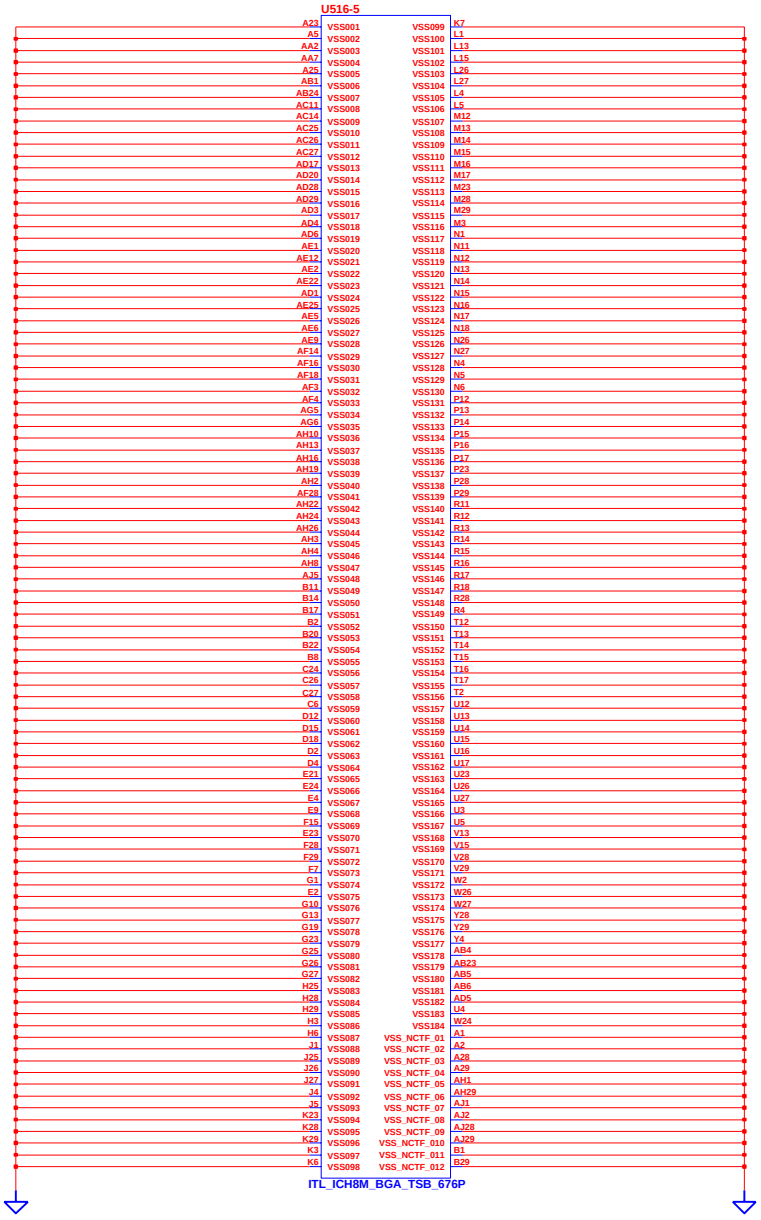

CHANGE by	IEC951098	31-Jul-2007

INVENTEC

TITLE

PT10SC ICH8-5

SIZE	CODE	DOC. NUMBER	REV
A3	CS	*Model_No*	*X01*

SHEET 38 OF 63

BLANK

INVENTEC			
TITLE			
SIZE A3	CODE CS	DOC. NUMBER Model_No	REV X01
CHANGE by IEC951098	30-Nov-2007	SHEET 39 OF 63	

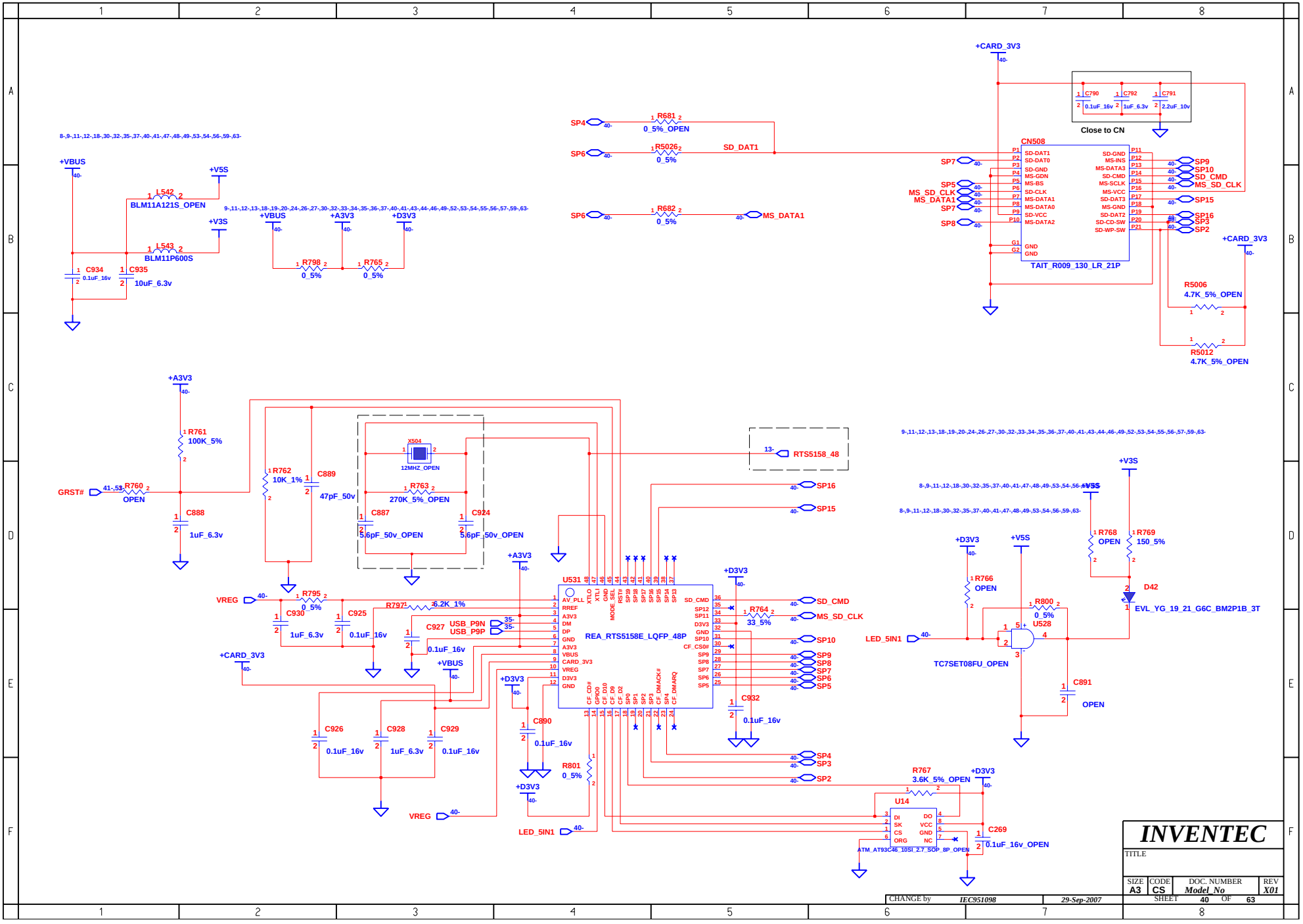
+VBUS
+V5S
L542
BLM11A121S_OPEN
+V3S
L543
BLM11P600S
C934
0.1uF_16v
C935
10uF_6.3v
+VBUS
+A3V3
+D3V3
R798
0_5%
R765
0_5%
SP4
R681
0_5%_OPEN
SP6
R5026
0_5%
SD_DAT1
SP6
R682
0_5%
MS_DATA1
+CARD_3V3
C790
0.1uF_16v
C792
1uF_6.3v
C791
2.2uF_10v
Close to CN
CN508
SP7
SP5
MS_SD_CLK
MS_DATA1
SP7
SP8
SD-DAT1
SD-DAT0
SD-GND
MS-GDN
MS-BS
SD-CLK
MS-DATA1
MS-DATA0
SD-VCC
MS-DATA2
GND
GND
SD-GND
MS-INS
MS-DATA3
SD-CMD
MS-SCLK
MS-VCC
SD-DAT3
MS-GND
SD-DAT2
SD-CD-SW
SD-WP-SW
SP9
SP10
SD_CMD
MS_SD_CLK
SP15
SP16
SP3
SP2
TAIT_R009_130_LR_21P
+CARD_3V3
R5006
4.7K_5%_OPEN
R5012
4.7K_5%_OPEN
+A3V3
R761
100K_5%
GRST#
R760
OPEN
C888
1uF_6.3v
R762
10K_1%
C889
47pF_50v
X504
12MHZ_OPEN
R763
270K_5%_OPEN
C887
5.6pF_50v_OPEN
C924
5.6pF_50v_OPEN
RTS5158_48
SP16
SP15
+V3S
+V5S
R768
OPEN
R769
150_5%
D42
EVL_YG_19_21_G6C_BM2P1B_3T
+D3V3
R766
OPEN
R800
0_5%
U528
TC7SET08FU_OPEN
LED_5IN1
C891
OPEN
VREG
R795
0_5%
C930
1uF_6.3v
C925
0.1uF_16v
R797
6.2K_1%
C927
0.1uF_16v
USB_P9N
USB_P9P
+CARD_3V3
+VBUS
U531
AV_PLL
RREF
A3V3
DM
DP
GND
A3V3
VBUS
CARD_3V3
VREG
D3V3
GND
REA_RTS5158E_LQFP_48P
SD_CMD
SP12
SP11
D3V3
GND
SP10
CF_CS0#
SP9
SP8
SP7
SP6
SP5
SD_CMD
MS_SD_CLK
SP10
SP9
SP8
SP7
SP6
SP5
SP4
SP3
SP2
R764
33_5%
C932
0.1uF_16v
C926
0.1uF_16v
C928
1uF_6.3v
C929
0.1uF_16v
C890
0.1uF_16v
R801
0_5%
VREG
LED_5IN1
R767
3.6K_5%_OPEN
U14
DI
SK
CS
ORG
DO
VCC
GND
NC
ATM_AT93C46_10SI_2.7_SOP_8P_OPEN
C269
0.1uF_16v_OPEN
INVENTEC
TITLE
SIZE A3
CODE CS
DOC. NUMBER Model_No
REV X01
SHEET 40 OF 63
CHANGE by IEC951098
29-Sep-2007

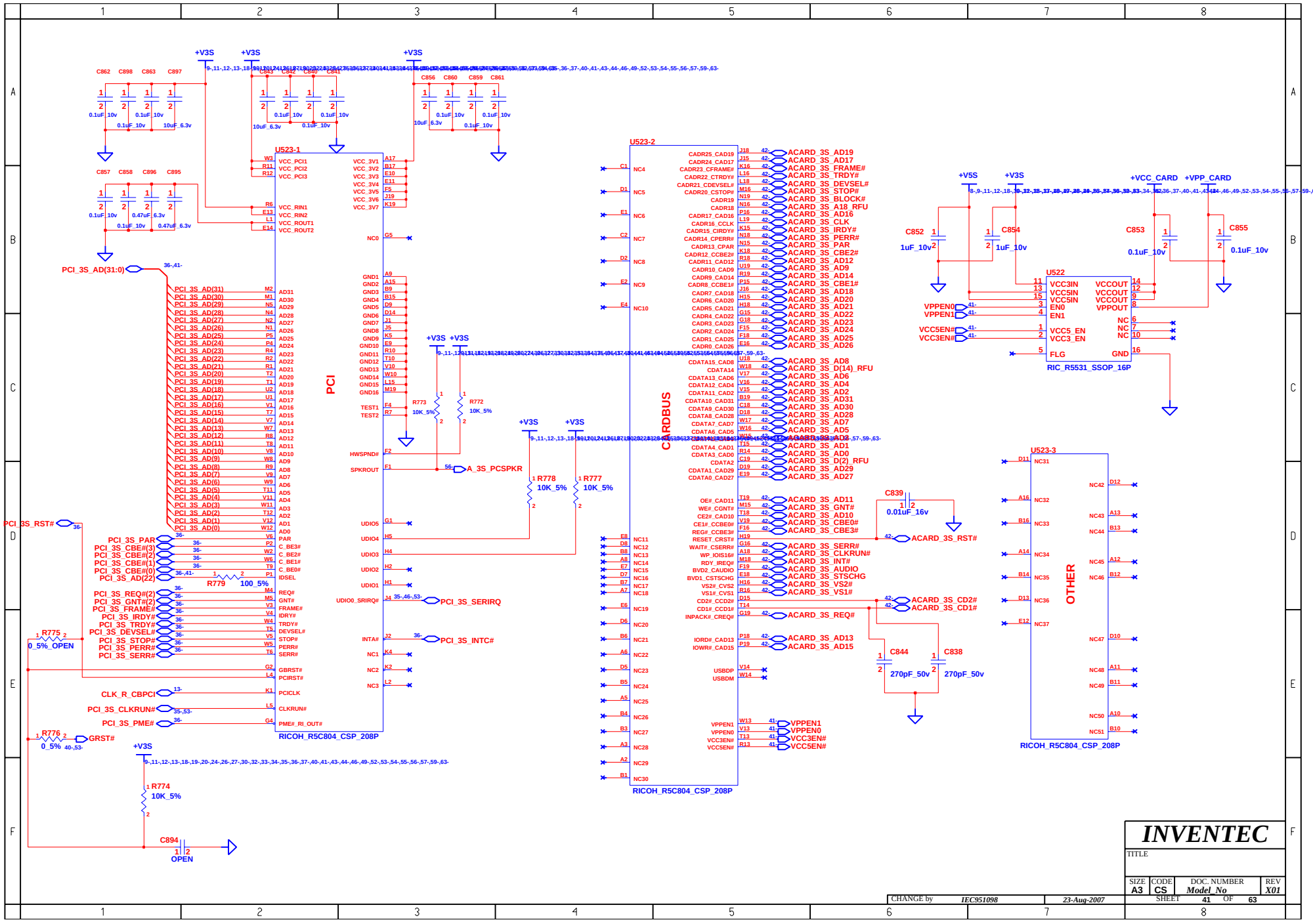
U523-1
PCI
RICOH_R5C804_CSP_208P
U523-2
CARDBUS
RICOH_R5C804_CSP_208P
U523-3
OTHER
RICOH_R5C804_CSP_208P
U522
RIC_R5531_SSOP_16P
PCI_3S_AD(31:0)
PCI_3S_RST#
PCI_3S_PAR
PCI_3S_CBE#(3)
PCI_3S_CBE#(2)
PCI_3S_CBE#(1)
PCI_3S_CBE#(0)
PCI_3S_AD(22)
PCI_3S_REQ#(2)
PCI_3S_GNT#(2)
PCI_3S_FRAME#
PCI_3S_IRDY#
PCI_3S_TRDY#
PCI_3S_DEVSEL#
PCI_3S_STOP#
PCI_3S_PERR#
PCI_3S_SERR#
CLK_R_CBPCI
PCI_3S_CLKRUN#
PCI_3S_PME#
GRST#
A_3S_PCSPKR
PCI_3S_SERIRQ
PCI_3S_INTC#
ACARD_3S_RST#
ACARD_3S_CD2#
ACARD_3S_CD1#
ACARD_3S_REQ#
VPPEN1
VPPEN0
VCC3EN#
VCC5EN#
+V3S
+V5S
+VCC_CARD
+VPP_CARD
R775 0_5%_OPEN
R776 0_5%
R774 10K_5%
C894 OPEN
INVENTEC
TITLE
SIZE A3
CODE CS
DOC. NUMBER Model_No
REV X01
SHEET 41 OF 63
CHANGE by IEC951098
23-Aug-2007

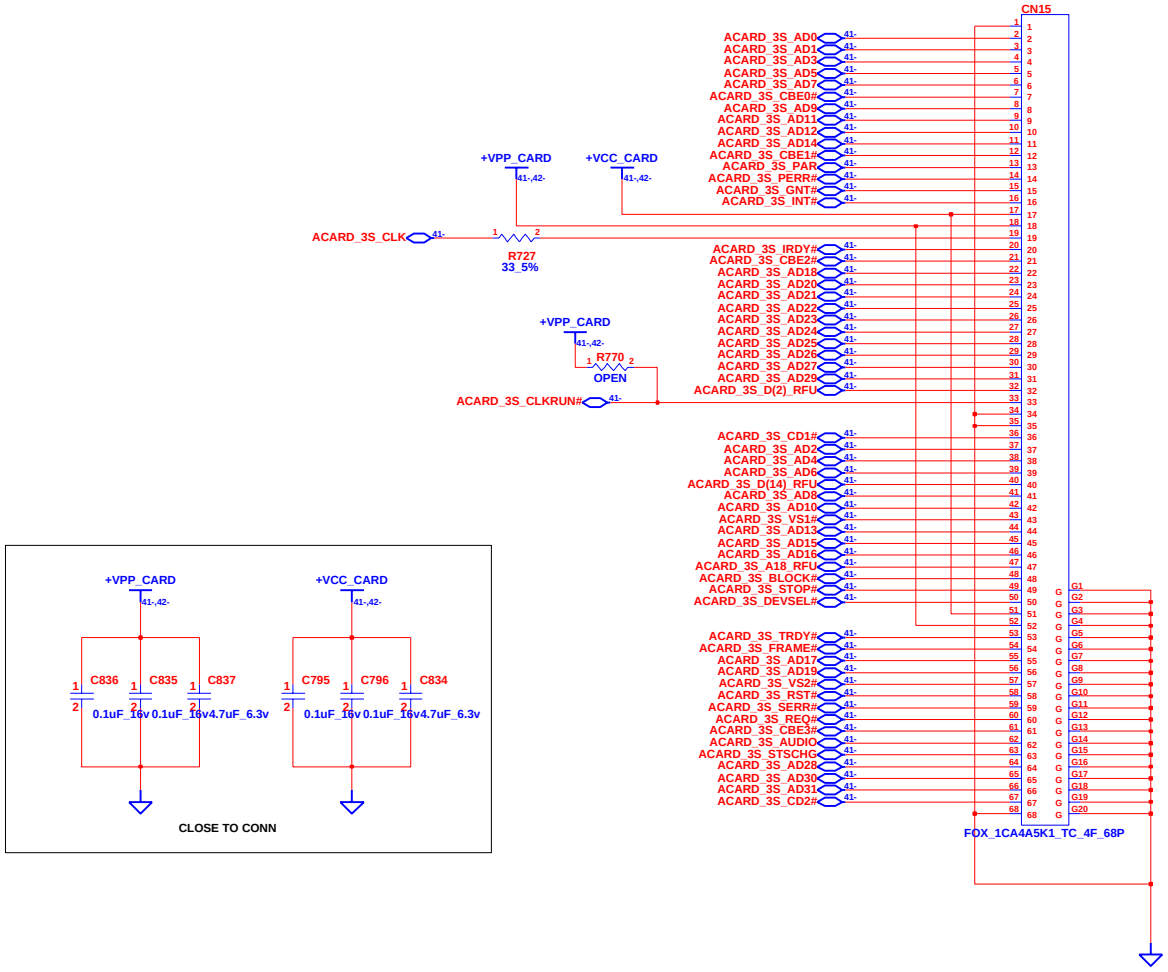

INVENTEC

TITLE

SIZE	CODE	DOC. NUMBER	REV
A3	CS	Model_No	X01

CHANGE by IEC951098 1-Nov-2007

SHEET 42 OF 63

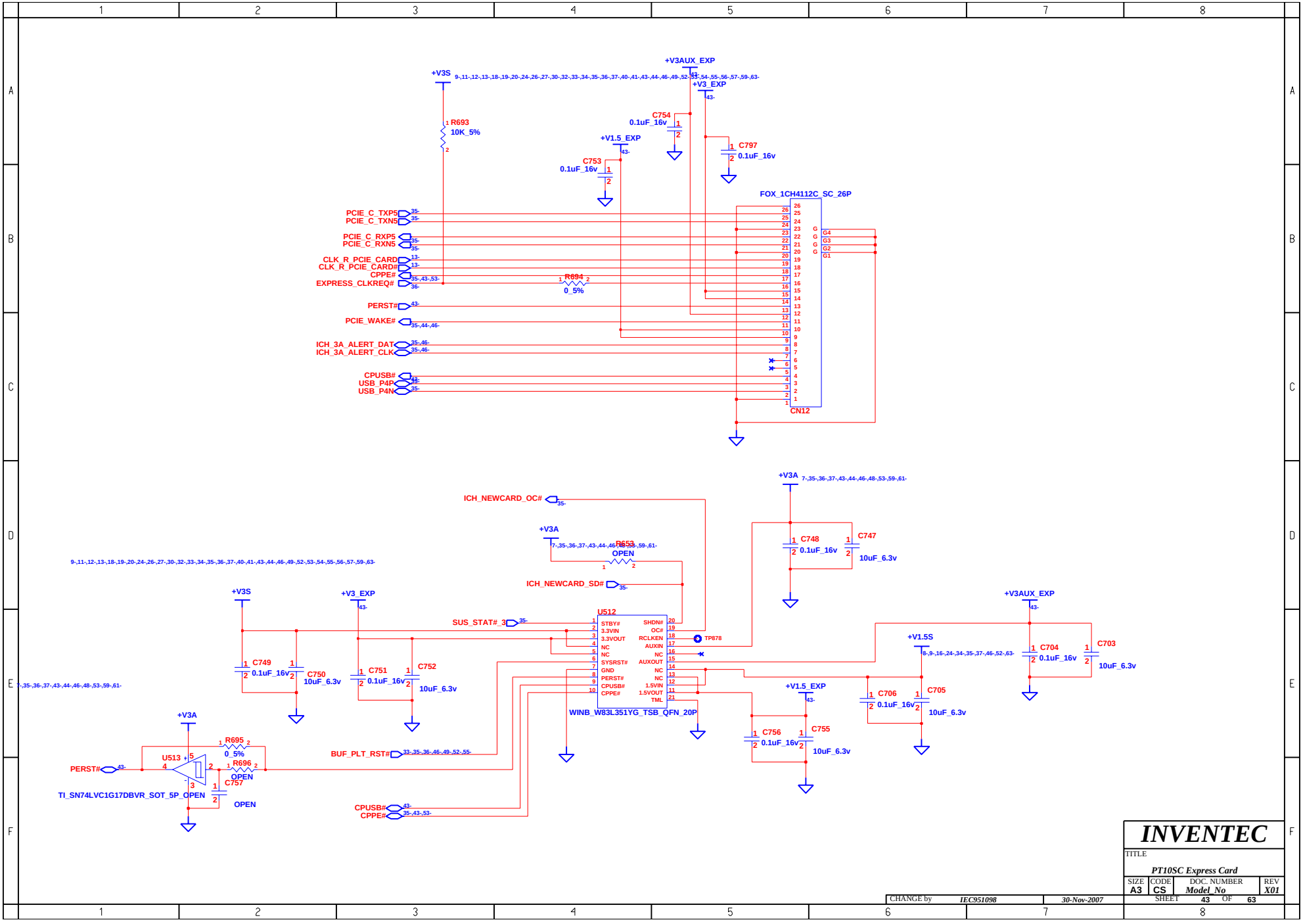

INVENTEC			
TITLE	PT10SC Express Card		
SIZE A3	CODE CS	DOC. NUMBER Model_No	REV X01
CHANGE by IEC951098	30-Nov-2007	SHEET 43 OF 63	

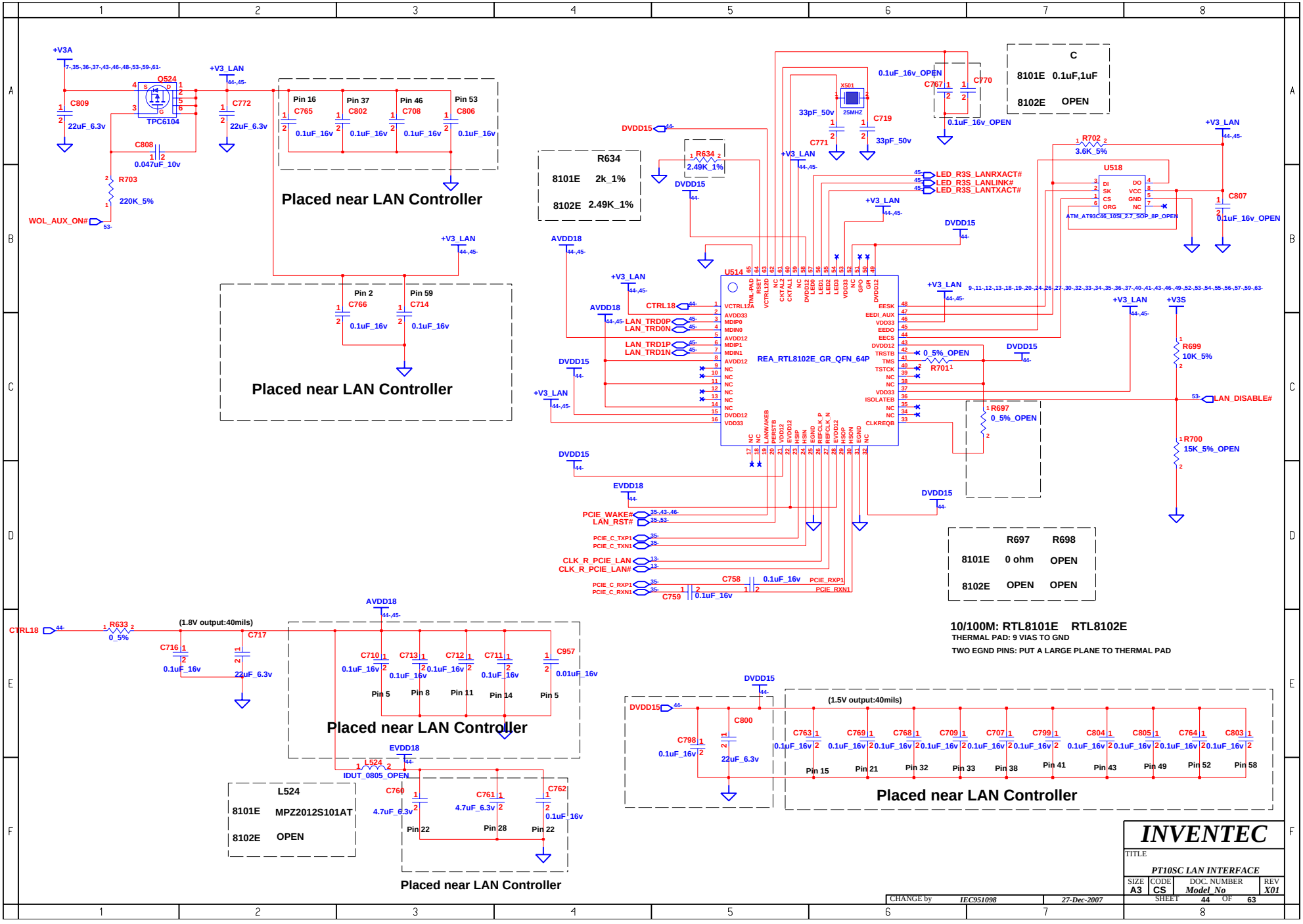
+V3A
Q524
TPC6104
C809
22uF_6.3v
C808
0.047uF_10v
R703
220K_5%
WOL_AUX_ON#
+V3_LAN
C772
22uF_6.3v
Pin 16
C765
Pin 37
C802
Pin 46
C708
Pin 53
C806
0.1uF_16v
Placed near LAN Controller
Pin 2
C766
Pin 59
C714
Placed near LAN Controller
R634
8101E 2k_1%
8102E 2.49K_1%
R634
2.49K_1%
DVDD15
AVDD18
U514
REA_RTL8102E_GR_QFN_64P
CTRL18
LAN_TRD0P
LAN_TRD0N
LAN_TRD1P
LAN_TRD1N
EVDD18
PCIE_WAKE#
LAN_RST#
PCIE_C_TXP1
PCIE_C_TXN1
CLK_R_PCIE_LAN
CLK_R_PCIE_LAN#
PCIE_C_RXP1
PCIE_C_RXN1
C758
C759
0.1uF_16v
PCIE_RXP1
PCIE_RXN1
X501
25MHZ
33pF_50v
C771
C719
33pF_50v
0.1uF_16v_OPEN
C767
C770
C
8101E 0.1uF,1uF
8102E OPEN
LED_R3S_LANRXACT#
LED_R3S_LANLINK#
LED_R3S_LANTXACT#
R702
3.6K_5%
U518
ATM_AT93C46_10SI_2.7_SOP_8P_OPEN
C807
0.1uF_16v_OPEN
+V3S
R699
10K_5%
LAN_DISABLE#
R700
15K_5%_OPEN
0_5%_OPEN
R701
R697
0_5%_OPEN
R697 R698
8101E 0 ohm OPEN
8102E OPEN OPEN
10/100M: RTL8101E RTL8102E
THERMAL PAD: 9 VIAS TO GND
TWO EGND PINS: PUT A LARGE PLANE TO THERMAL PAD
CTRL18
R633
0_5%
(1.8V output:40mils)
C716
0.1uF_16v
C717
22uF_6.3v
C710
C713
C712
C711
C957
0.01uF_16v
Pin 5
Pin 8
Pin 11
Pin 14
Pin 5
Placed near LAN Controller
EVDD18
L524
IDUT_0805_OPEN
L524
8101E MPZ2012S101AT
8102E OPEN
C760
4.7uF_6.3v
C761
4.7uF_6.3v
C762
0.1uF_16v
Pin 22
Pin 28
Pin 22
Placed near LAN Controller
DVDD15
C798
0.1uF_16v
C800
22uF_6.3v
(1.5V output:40mils)
C763
C769
C768
C709
C707
C799
C804
C805
C764
C803
0.1uF_16v
Pin 15
Pin 21
Pin 32
Pin 33
Pin 38
Pin 41
Pin 43
Pin 49
Pin 52
Pin 58
Placed near LAN Controller
INVENTEC
TITLE
PT10SC LAN INTERFACE
SIZE A3
CODE CS
DOC. NUMBER Model_No
REV X01
SHEET 44 OF 63
CHANGE by IEC951098
27-Dec-2007

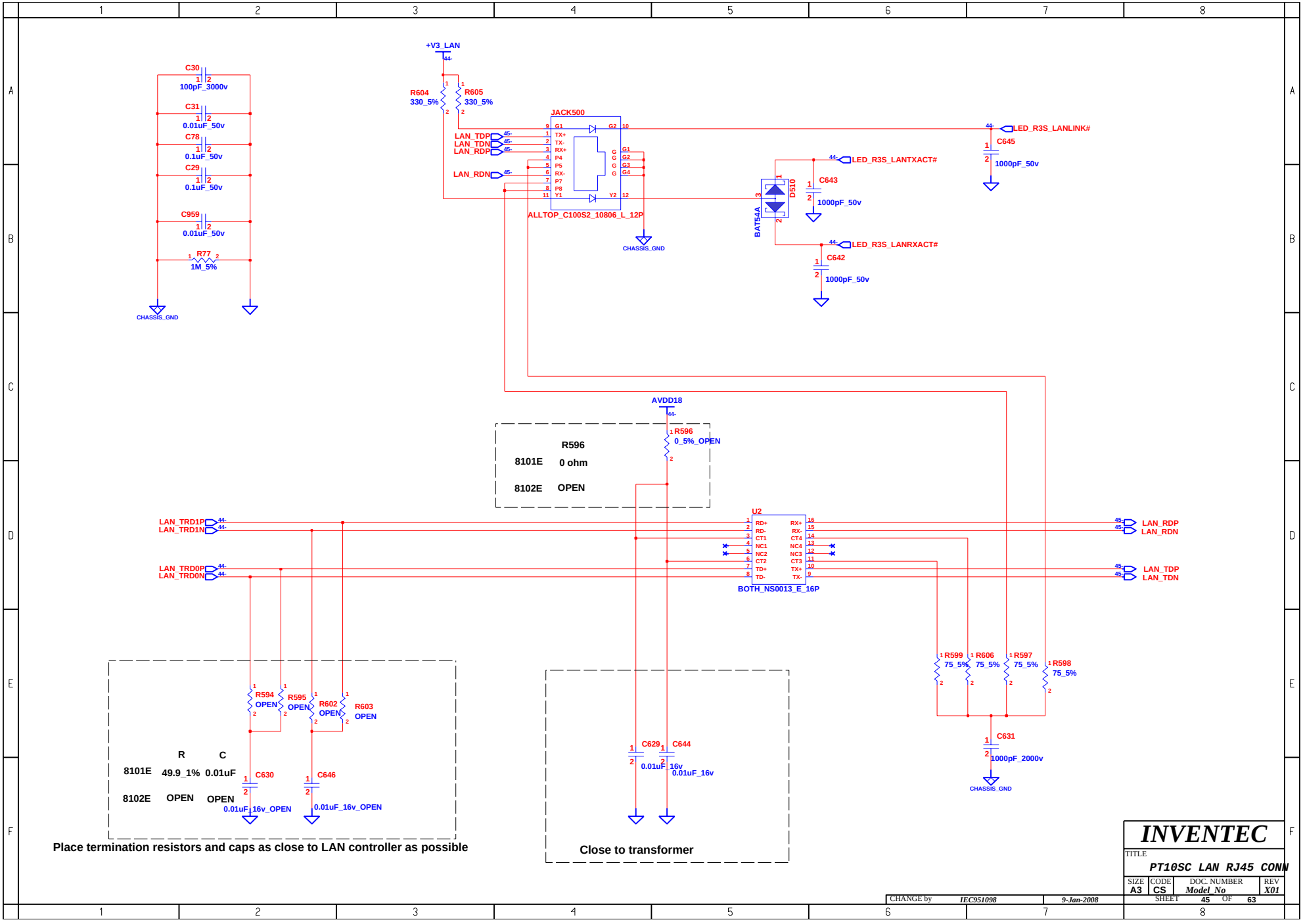
C30
100pF_3000v
C31
0.01uF_50v
C78
0.1uF_50v
C29
0.1uF_50v
C959
0.01uF_50v
R77
1M_5%
CHASSIS_GND
+V3_LAN
R604
330_5%
R605
330_5%
JACK500
LAN_TDP
LAN_TDN
LAN_RDP
LAN_RDN
ALLTOP_C100S2_10806_L_12P
CHASSIS_GND
LED_R3S_LANLINK#
C645
1000pF_50v
LED_R3S_LANTXACT#
C643
1000pF_50v
D510
BAT54A
LED_R3S_LANRXACT#
C642
1000pF_50v
AVDD18
R596
0_5%_OPEN
R596
8101E 0 ohm
8102E OPEN
U2
BOTH_NS0013_E_16P
LAN_TRD1P
LAN_TRD1N
LAN_TRD0P
LAN_TRD0N
LAN_RDP
LAN_RDN
LAN_TDP
LAN_TDN
R599
75_5%
R606
75_5%
R597
75_5%
R598
75_5%
C631
1000pF_2000v
CHASSIS_GND
R594
OPEN
R595
OPEN
R602
OPEN
R603
OPEN
R C
8101E 49.9_1% 0.01uF
8102E OPEN OPEN
C630
0.01uF_16v_OPEN
C646
0.01uF_16v_OPEN
Place termination resistors and caps as close to LAN controller as possible
C629
0.01uF
C644
0.01uF_16v
Close to transformer
INVENTEC
TITLE
PT10SC LAN RJ45 CONN
SIZE A3
CODE CS
DOC. NUMBER Model_No
REV X01
SHEET 45 OF 63
CHANGE by IEC951098
9-Jan-2008

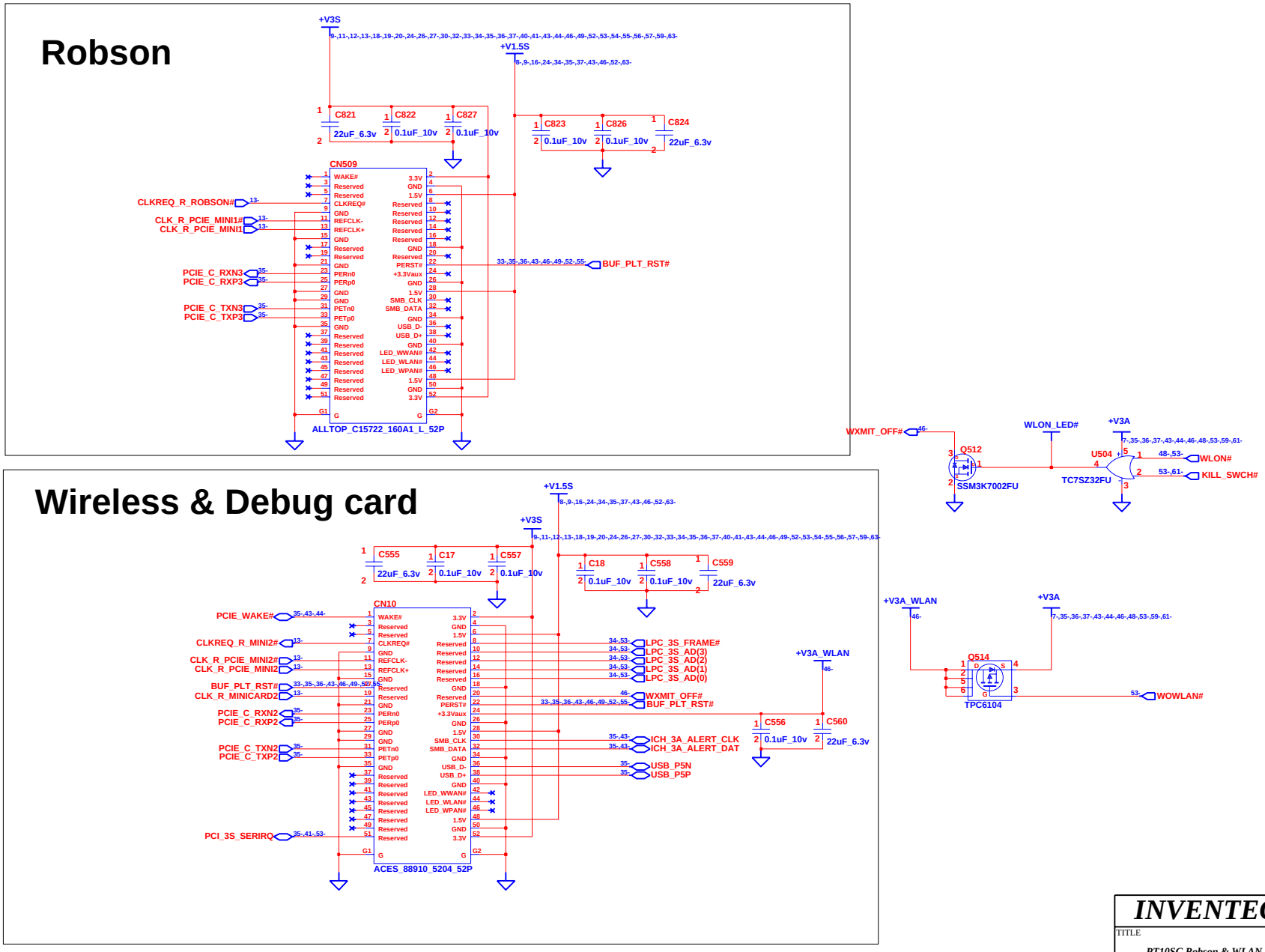
Robson
+V3S
+V1.5S
C821 22uF_6.3v
C822 0.1uF_10v
C827 0.1uF_10v
C823 0.1uF_10v
C826 0.1uF_10v
C824 22uF_6.3v
CN509
CLKREQ_R_ROBSON#
CLK_R_PCIE_MINI1#
CLK_R_PCIE_MINI1
PCIE_C_RXN3
PCIE_C_RXP3
PCIE_C_TXN3
PCIE_C_TXP3
BUF_PLT_RST#
ALLTOP_C15722_160A1_L_52P
WXMIT_OFF#
Q512
SSM3K7002FU
WLON_LED#
+V3A
U504
TC7SZ32FU
WLON#
KILL_SWCH#
Wireless & Debug card
+V1.5S
+V3S
C555 22uF_6.3v
C17 0.1uF_10v
C557 0.1uF_10v
C18 0.1uF_10v
C558 0.1uF_10v
C559 22uF_6.3v
CN10
PCIE_WAKE#
CLKREQ_R_MINI2#
CLK_R_PCIE_MINI2#
CLK_R_PCIE_MINI2
BUF_PLT_RST#
CLK_R_MINICARD2
PCIE_C_RXN2
PCIE_C_RXP2
PCIE_C_TXN2
PCIE_C_TXP2
PCI_3S_SERIRQ
LPC_3S_FRAME#
LPC_3S_AD(3)
LPC_3S_AD(2)
LPC_3S_AD(1)
LPC_3S_AD(0)
WXMIT_OFF#
BUF_PLT_RST#
ICH_3A_ALERT_CLK
ICH_3A_ALERT_DAT
USB_P5N
USB_P5P
+V3A_WLAN
C556 0.1uF_10v
C560 22uF_6.3v
ACES_88910_5204_52P
+V3A_WLAN
+V3A
Q514
TPC6104
WOWLAN#
INVENTEC
TITLE
PT10SC Robson & WLAN
SIZE A3
CODE CS
DOC. NUMBER Model_No
REV X01
SHEET 46 OF 63
CHANGE by IEC951098
4-Dec-2007

SATA HDD01

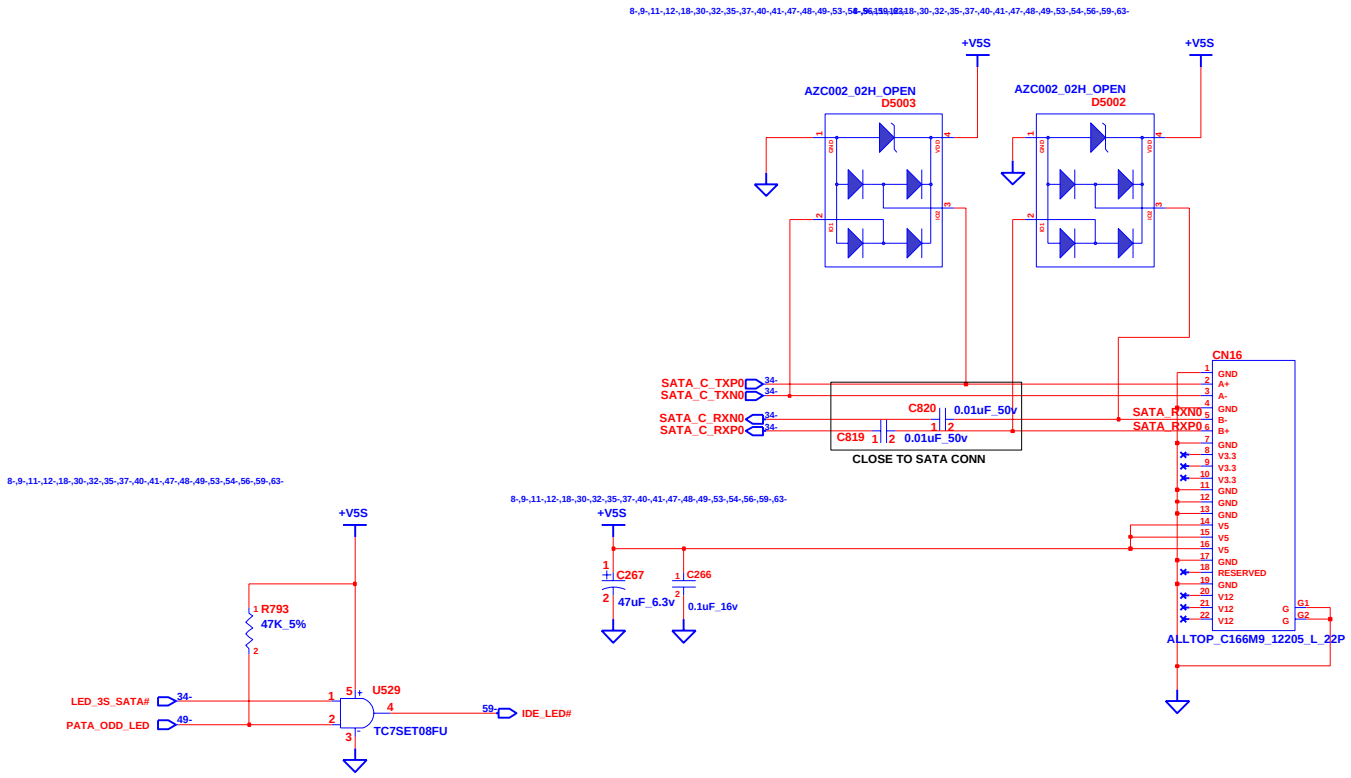

CHANGE by	IEC951098	30-Nov-2007	

INVENTEC

TITLE

PT10SC SATA HDD CONN

SIZE	CODE	DOC. NUMBER	REV
A3	CS	*Model_No*	*X01*

SHEET 47 OF 63

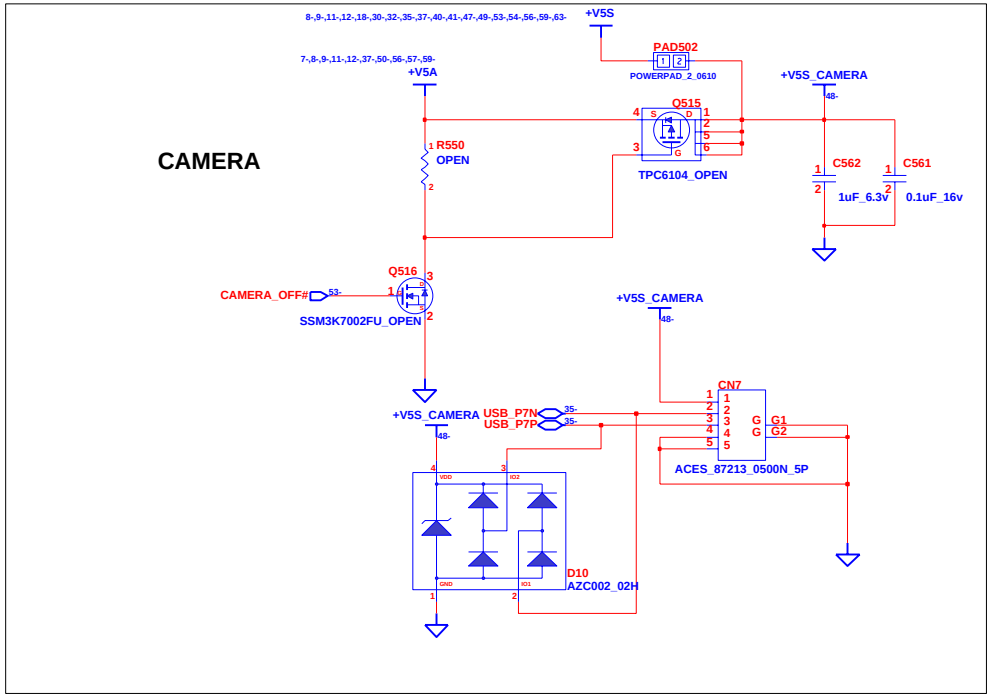

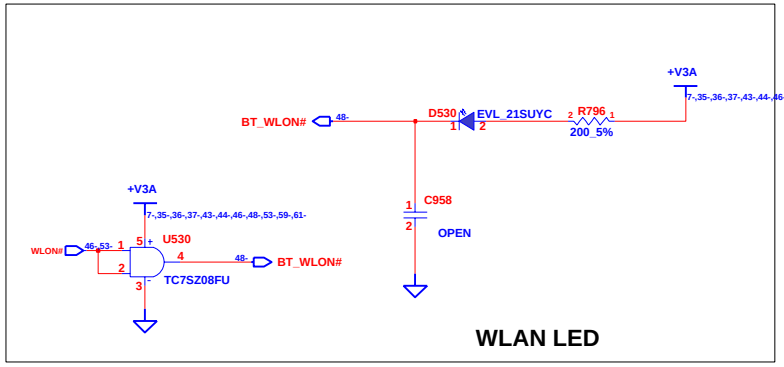

INVENTEC

TITLE: Finger Printer & Camera

SIZE	CODE	DOC. NUMBER	REV
A3	CS	Model_No	X01

SHEET 48 OF 63

CHANGE by	IEC951098	10-Dec-2007

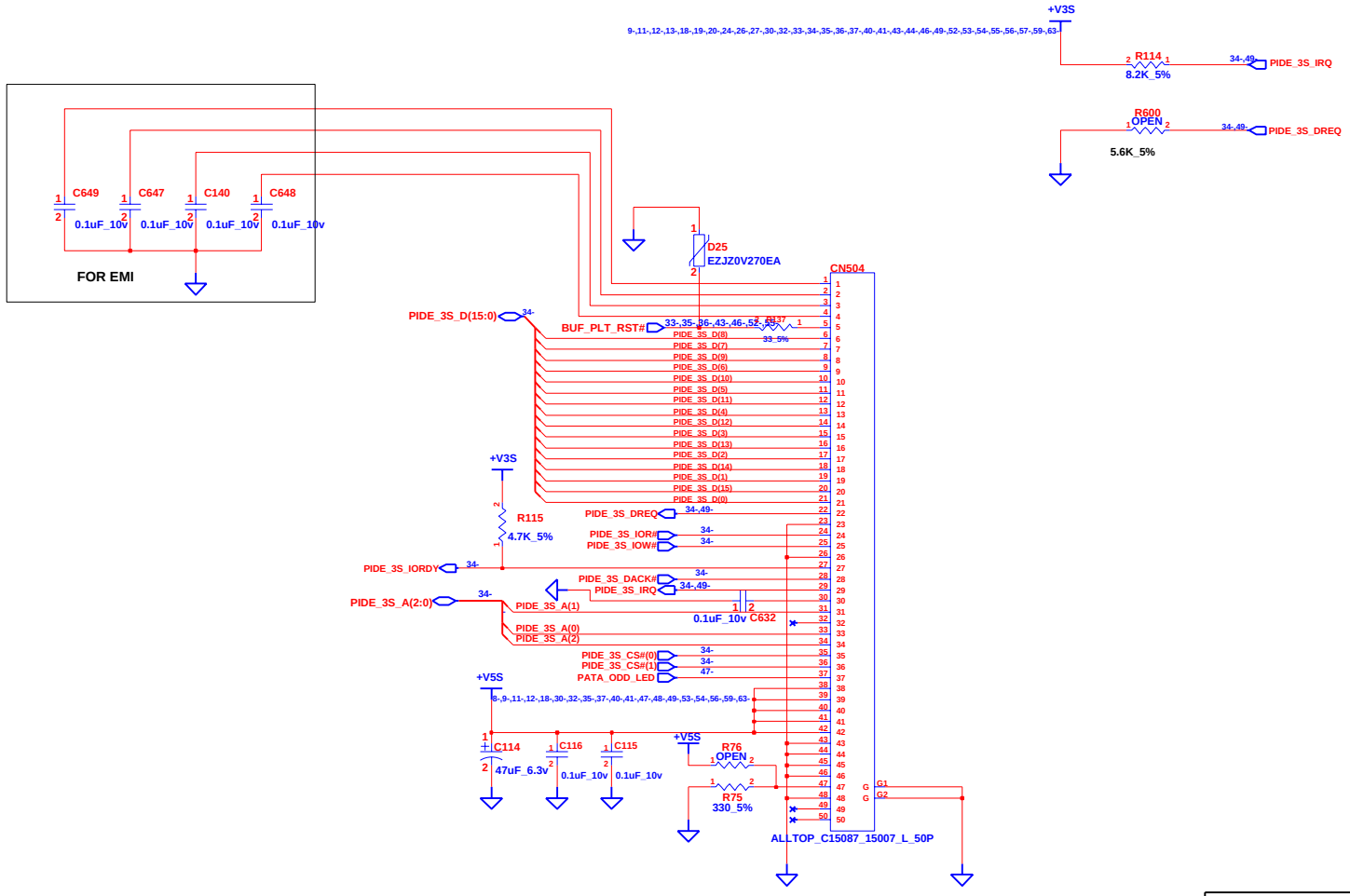

CHANGE by	IEC951098	31-Jul-2007	

INVENTEC

TITLE: PT10SC ODD

SIZE	CODE	DOC. NUMBER	REV
A3	CS	Model_No	X01

SHEET 49 OF 63

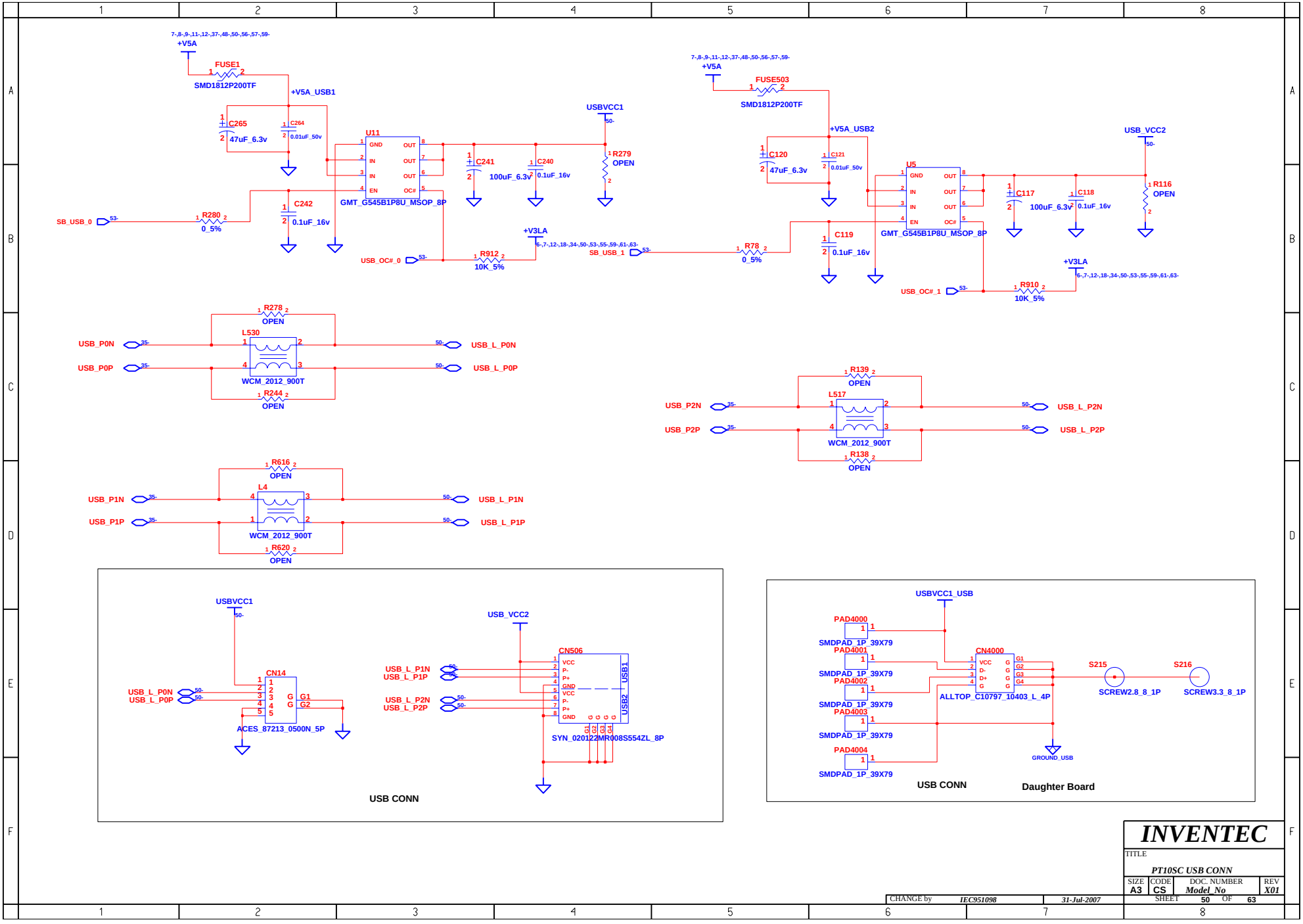

INVENTEC

TITLE

PT10SC USB CONN

SIZE	CODE	DOC. NUMBER	REV
A3	CS	*Model_No*	*X01*

CHANGE by *IEC951098* *31-Jul-2007*

SHEET 50 OF 63

BLANK

CHANGE by	IEC951098	30-Nov-2007	

INVENTEC

TITLE

PT10SC BLUETOOTH

SIZE	CODE	DOC. NUMBER	REV
A3	CS	Model_No	X01

SHEET 51 OF 63

HD_DVD

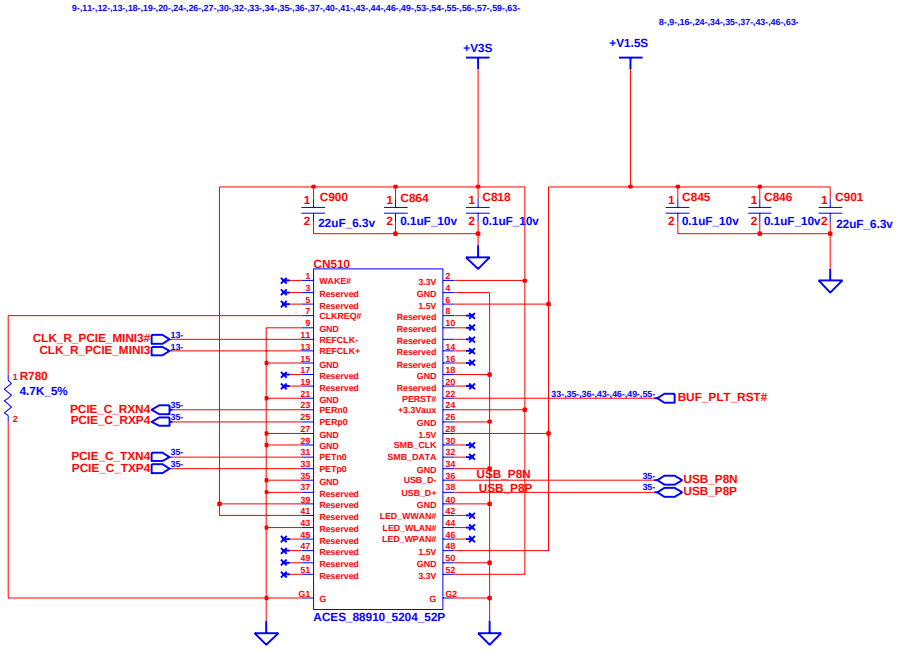

CHANGE by	IEC951098	27-Dec-2007	

INVENTEC

TITLE

PT10SC 3G_SIM

SIZE	CODE	DOC. NUMBER	REV
A3	CS	*Model_No*	*X01*

SHEET 52 OF 63

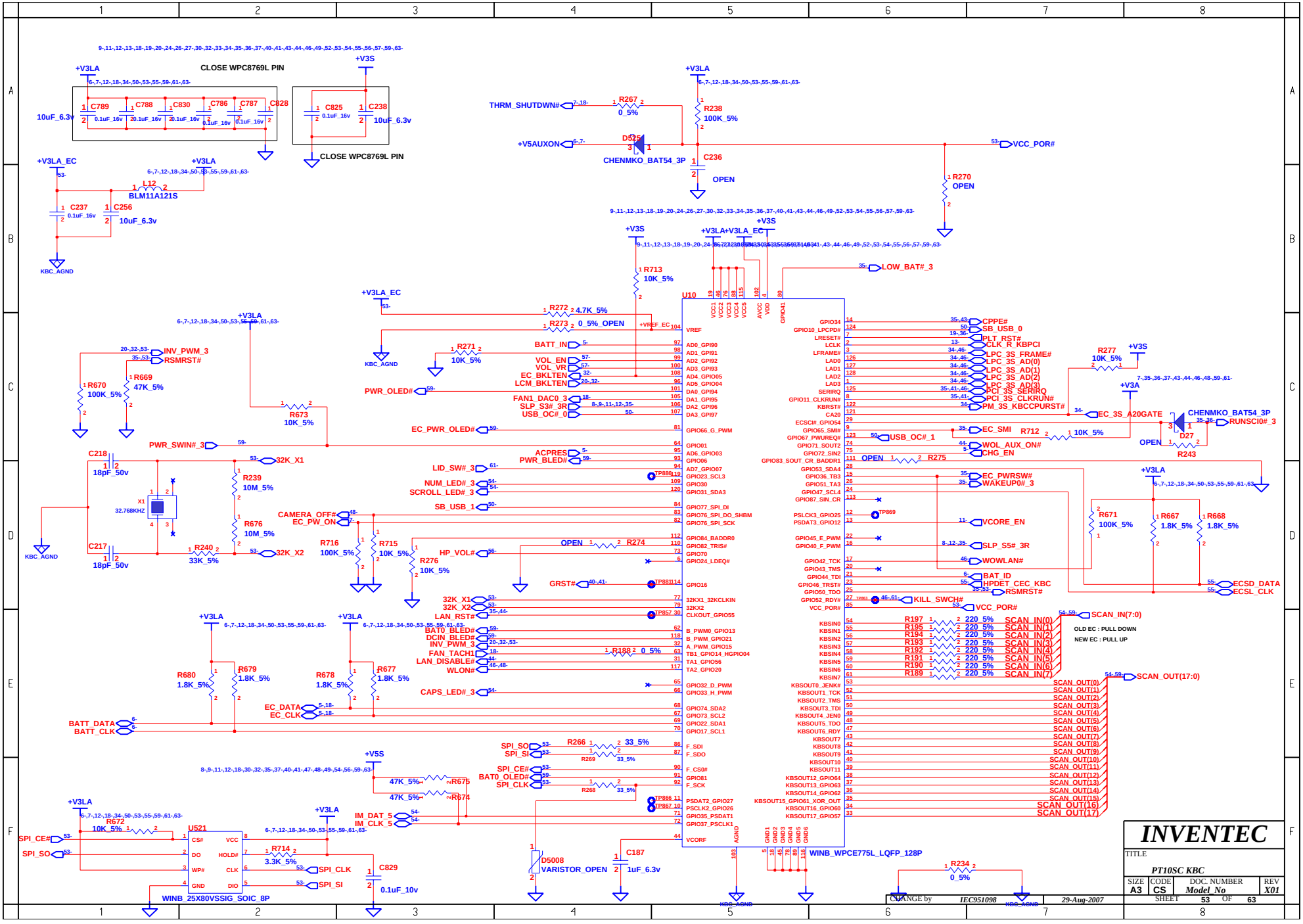
CLOSE WPC8769L PIN
+V3LA
+V3S
C789 C788 C830 C786 C787 C828
10uF_6.3v
0.1uF_16v
C825 C238
10uF_6.3v
+V3LA_EC
L12
BLM11A121S
C237 C256
KBC_AGND
THRM_SHUTDWN#
R267
0_5%
R238
100K_5%
+V5AUXON
D525
CHENMKO_BAT54_3P
C236
OPEN
VCC_POR#
R270
OPEN
R713
10K_5%
LOW_BAT#_3
U10
WINB_WPCE775L_LQFP_128P
R272 4.7K_5%
R273 0_5%_OPEN
+VREF_EC
BATT_IN
R271
10K_5%
VOL_EN
VOL_VR
EC_BKLTEN
LCM_BKLTEN
PWR_OLED#
FAN1_DAC0_3
SLP_S3#_3R
USB_OC#_0
EC_PWR_OLED#
ACPRES
PWR_BLED#
LID_SW#_3
NUM_LED#_3
SCROLL_LED#_3
SB_USB_1
CAMERA_OFF#
EC_PW_ON
HP_VOL#
GRST#
32K_X1
32K_X2
LAN_RST#
BAT0_BLED#
DCIN_BLED#
INV_PWM_3
FAN_TACH1
LAN_DISABLE#
WLON#
CAPS_LED#_3
EC_DATA
EC_CLK
BATT_DATA
BATT_CLK
SPI_SO
SPI_SI
SPI_CE#
BAT0_OLED#
SPI_CLK
IM_DAT_5
IM_CLK_5
INV_PWM_3
RSMRST#
R670 100K_5%
R669 47K_5%
R673 10K_5%
PWR_SWIN#_3
C218 18pF_50v
C217 18pF_50v
X1 32.768KHZ
R239 10M_5%
R676 10M_5%
R240 33K_5%
R716 100K_5%
R715 10K_5%
R276 10K_5%
OPEN R274
R680 1.8K_5%
R679 1.8K_5%
R678 1.8K_5%
R677 1.8K_5%
R188 0_5%
R266 33_5%
R269 33_5%
R268 33_5%
R675 47K_5%
R674 47K_5%
U521
WINB_25X80VSSIG_SOIC_8P
R672 10K_5%
R714 3.3K_5%
C829 0.1uF_10v
D5008 VARISTOR_OPEN
C187 1uF_6.3v
CPPE#
SB_USB_0
PLT_RST#
CLK_R_KBPCI
LPC_3S_FRAME#
LPC_3S_AD(0)
LPC_3S_AD(1)
LPC_3S_AD(2)
LPC_3S_AD(3)
PCI_3S_SERIRQ
PCI_3S_CLKRUN#
PM_3S_KBCCPURST#
EC_3S_A20GATE
EC_SMI
USB_OC#_1
WOL_AUX_ON#
CHG_EN
OPEN R275
EC_PWRSW#
WAKEUP0#_3
VCORE_EN
SLP_S5#_3R
WOWLAN#
BAT_ID
HPDET_CEC_KBC
RSMRST#
KILL_SWCH#
VCC_POR#
R277 10K_5%
+V3A
R712 10K_5%
D27 OPEN
R243
CHENMKO_BAT54_3P
RUNSCI0#_3
R671 100K_5%
R667 1.8K_5%
R668 1.8K_5%
ECSD_DATA
ECSL_CLK
SCAN_IN(7:0)
SCAN_OUT(17:0)
R197 220_5% SCAN_IN(0)
R195 220_5% SCAN_IN(1)
R194 220_5% SCAN_IN(2)
R193 220_5% SCAN_IN(3)
R192 220_5% SCAN_IN(4)
R191 220_5% SCAN_IN(5)
R190 220_5% SCAN_IN(6)
R189 220_5% SCAN_IN(7)
OLD EC : PULL DOWN
NEW EC : PULL UP
R234 0_5%
INVENTEC
TITLE
PT10SC KBC
SIZE A3
CODE CS
DOC. NUMBER Model_No
REV X01
SHEET 53 OF 63
CHANGE by IEC951098
29-Aug-2007

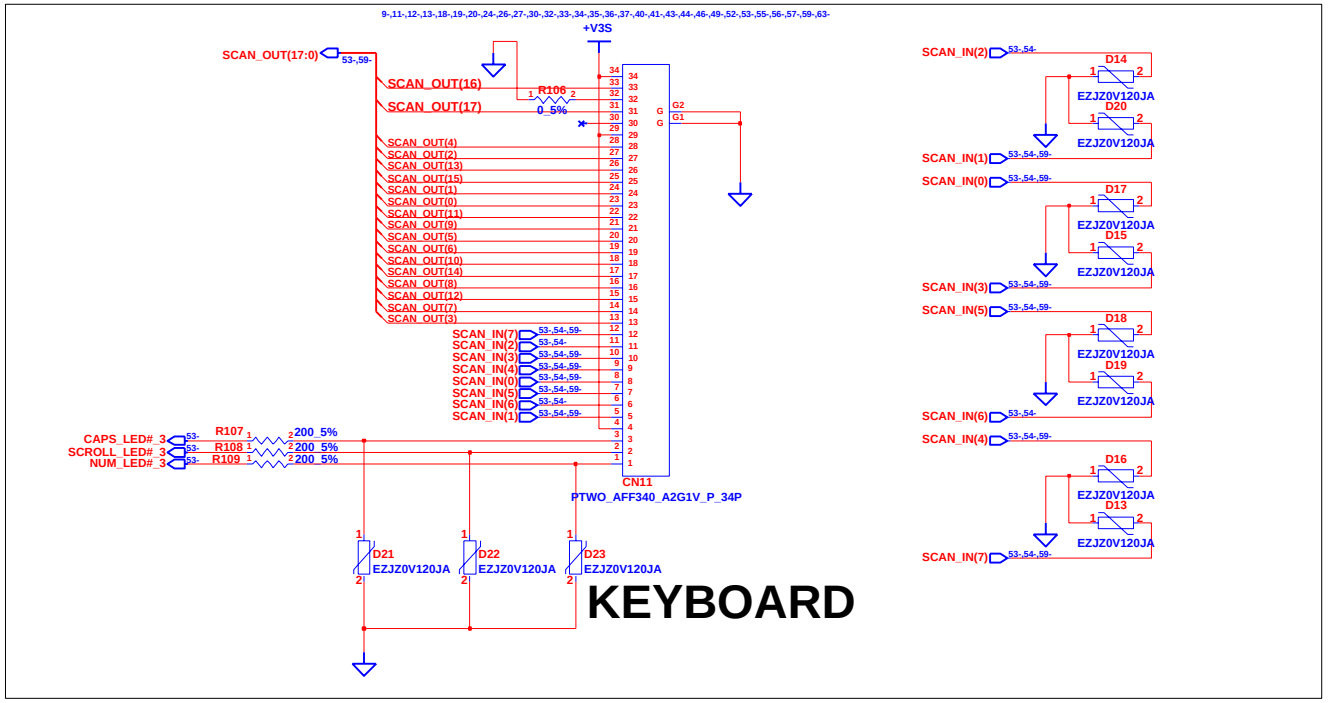

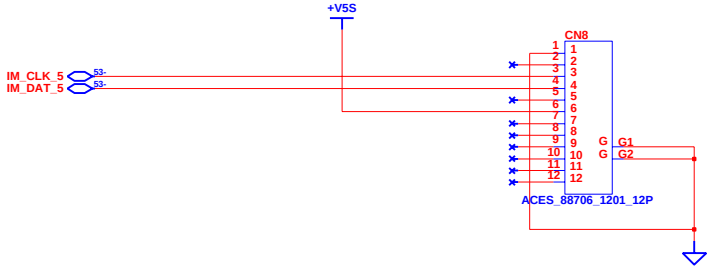

CHANGE by	IEC951098	10-Dec-2007	

INVENTEC

TITLE

PT10SC INT.KBC/POINT DEVICES

SIZE	CODE	DOC. NUMBER	REV
A3	CS	Model_No	X01

SHEET 54 OF 63

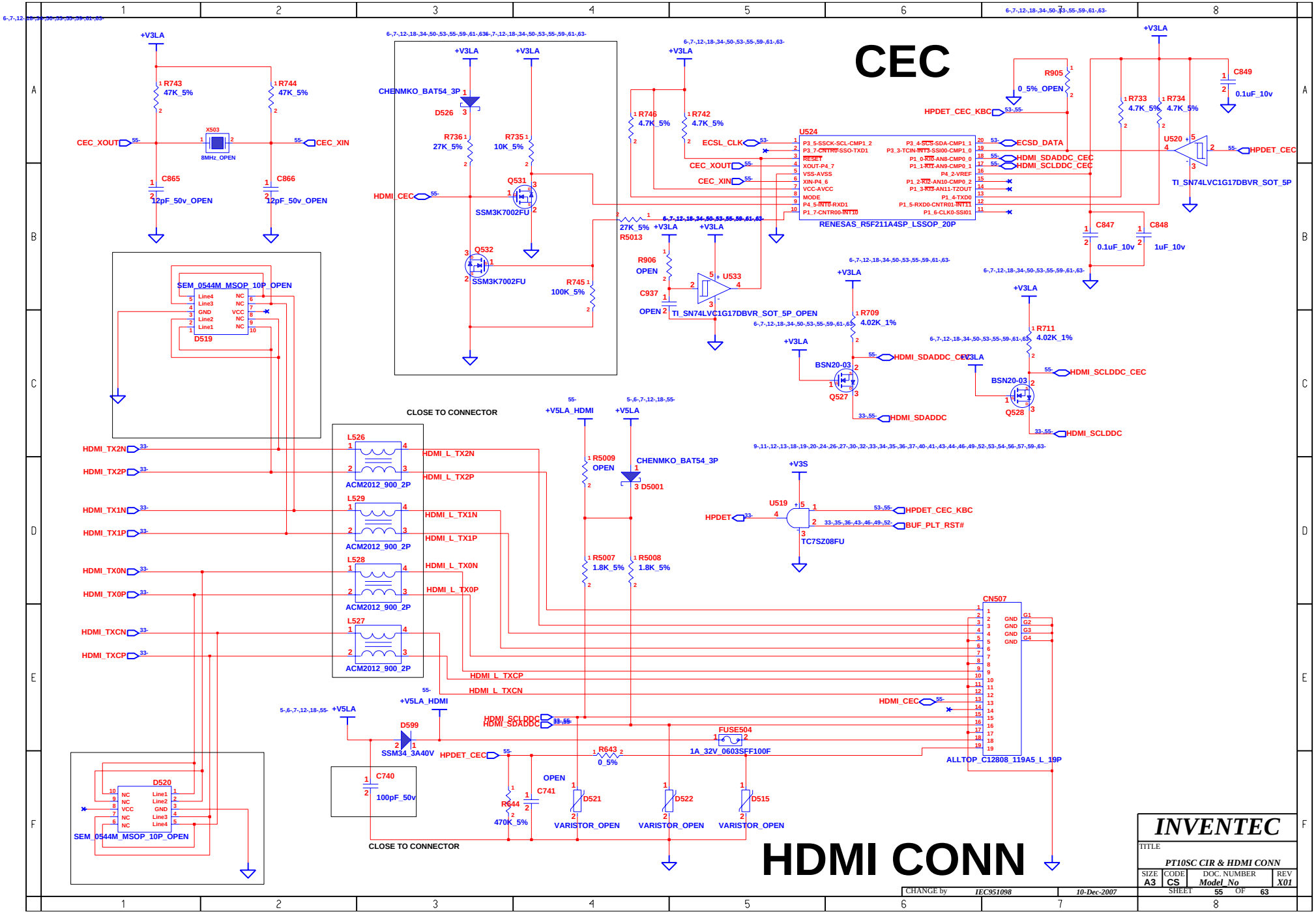
CEC
HDMI CONN
INVENTEC
TITLE
PT10SC CIR & HDMI CONN
SIZE A3
CODE CS
DOC. NUMBER Model_No
REV X01
SHEET 55 OF 63
CHANGE by IEC951098
10-Dec-2007
+V3LA
R743 47K_5%
R744 47K_5%
X503
8MHz_OPEN
CEC_XOUT
CEC_XIN
C865 12pF_50v_OPEN
C866 12pF_50v_OPEN
CHENMKO_BAT54_3P
D526
R736 27K_5%
R735 10K_5%
HDMI_CEC
Q531 SSM3K7002FU
Q532 SSM3K7002FU
R745 100K_5%
R746 4.7K_5%
R742 4.7K_5%
ECSL_CLK
U524
RENESAS_R5F211A4SP_LSSOP_20P
R905 0_5%_OPEN
HPDET_CEC_KBC
R733 4.7K_5%
R734 4.7K_5%
C849 0.1uF_10v
ECSD_DATA
HDMI_SDADDC_CEC
HDMI_SCLDDC_CEC
U520
TI_SN74LVC1G17DBVR_SOT_5P
HPDET_CEC
C847 0.1uF_10v
C848 1uF_10v
R5013 27K_5%
R906 OPEN
C937 OPEN
U533
TI_SN74LVC1G17DBVR_SOT_5P_OPEN
SEM_0544M_MSOP_10P_OPEN
D519
R709 4.02K_1%
R711 4.02K_1%
BSN20-03
Q527
Q528
HDMI_SDADDC
HDMI_SCLDDC
CLOSE TO CONNECTOR
HDMI_TX2N
HDMI_TX2P
HDMI_TX1N
HDMI_TX1P
HDMI_TX0N
HDMI_TX0P
HDMI_TXCN
HDMI_TXCP
L526
L529
L528
L527
ACM2012_900_2P
HDMI_L_TX2N
HDMI_L_TX2P
HDMI_L_TX1N
HDMI_L_TX1P
HDMI_L_TX0N
HDMI_L_TX0P
HDMI_L_TXCP
HDMI_L_TXCN
+V5LA_HDMI
+V5LA
R5009 OPEN
CHENMKO_BAT54_3P
D5001
R5007 1.8K_5%
R5008 1.8K_5%
+V3S
U519
TC7SZ08FU
HPDET
BUF_PLT_RST#
CN507
ALLTOP_C12808_119A5_L_19P
HDMI_SCLDDC
HDMI_SDADDC
D599
SSM34_3A40V
FUSE504
1A_32V_0603SFF100F
R643 0_5%
C740 100pF_50v
R644 470K_5%
C741 OPEN
D521
D522
D515
VARISTOR_OPEN
D520
SEM_0544M_MSOP_10P_OPEN

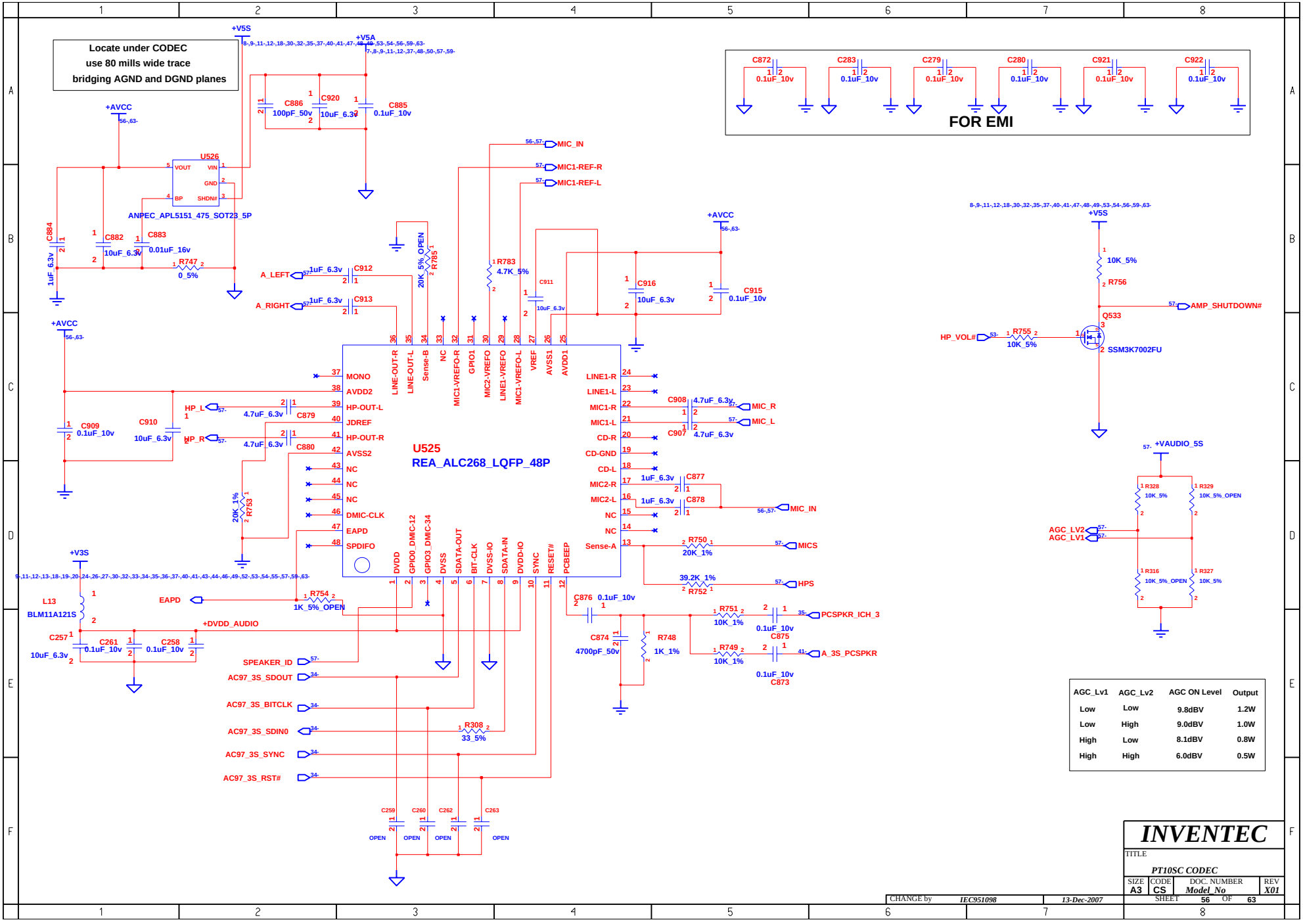

AGC_Lv1	AGC_Lv2	AGC ON Level	Output
Low	Low	9.8dBV	1.2W
Low	High	9.0dBV	1.0W
High	Low	8.1dBV	0.8W
High	High	6.0dBV	0.5W

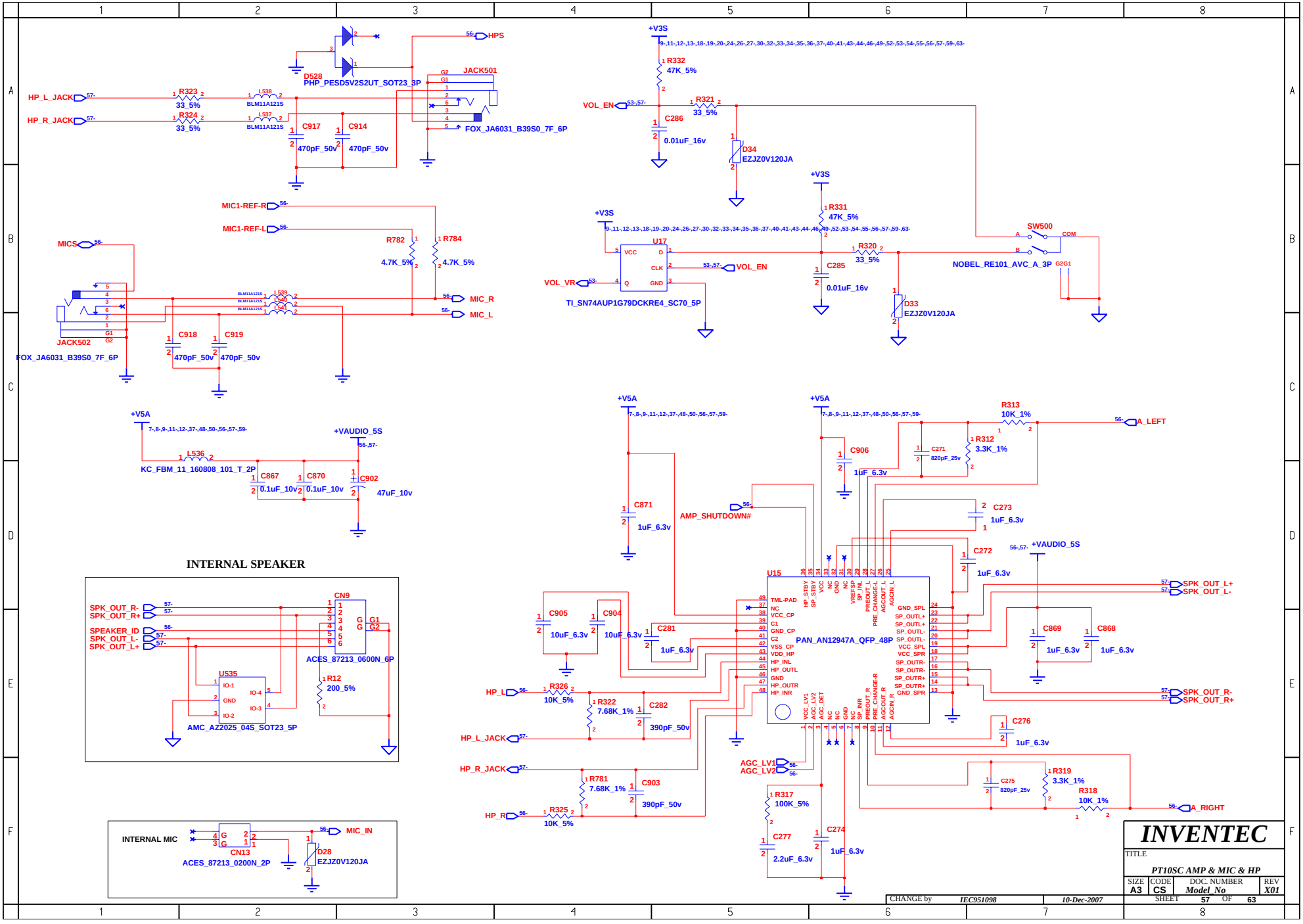
HP_L_JACK
HP_R_JACK
R323 33_5%
R324 33_5%
L538 BLM11A121S
L537 BLM11A121S
C917 470pF_50v
C914 470pF_50v
D528 PHP_PESD5V2S2UT_SOT23_3P
HPS
JACK501
FOX_JA6031_B39S0_7F_6P
MIC1-REF-R
MIC1-REF-L
MICS
R782 4.7K_5%
R784 4.7K_5%
L539 BLM11A121S
L540 BLM11A121S
L541 BLM11A121S
MIC_R
MIC_L
JACK502
FOX_JA6031_B39S0_7F_6P
C918 470pF_50v
C919 470pF_50v
+V3S
R332 47K_5%
VOL_EN
R321 33_5%
C286 0.01uF_16v
D34 EZJZ0V120JA
R331 47K_5%
U17
VCC
D
CLK
GND
Q
VOL_VR
TI_SN74AUP1G79DCKRE4_SC70_5P
R320 33_5%
C285 0.01uF_16v
D33 EZJZ0V120JA
SW500
A
B
COM
NOBEL_RE101_AVC_A_3P
G2G1
+V5A
L536
KC_FBM_11_160808_101_T_2P
+VAUDIO_5S
C867 0.1uF_10v
C870 0.1uF_10v
C902 47uF_10v
INTERNAL SPEAKER
SPK_OUT_R-
SPK_OUT_R+
SPEAKER_ID
SPK_OUT_L-
SPK_OUT_L+
CN9
ACES_87213_0600N_6P
U535
IO-1
GND
IO-2
IO-3
IO-4
AMC_AZ2025_04S_SOT23_5P
R12 200_5%
INTERNAL MIC
CN13
ACES_87213_0200N_2P
MIC_IN
D28 EZJZ0V120JA
C871 1uF_6.3v
AMP_SHUTDOWN#
C906 1uF_6.3v
C271 820pF_25v
R313 10K_1%
R312 3.3K_1%
A_LEFT
C273 1uF_6.3v
C272 1uF_6.3v
U15
PAN_AN12947A_QFP_48P
TML_PAD
NC
VCC_CP
C1
GND_CP
C2
VSS_CP
VDD_HP
HP_INL
HP_OUTL
GND
HP_OUTR
HP_INR
HP_STBY
SP_STBY
VCC
GND
VREF-SP
SP_INL
PREOUT_L
PRE_CHANGE-L
AGCOUT_L
AGCIN_L
GND_SPL
SP_OUTL+
SP_OUTL+
SP_OUTL-
SP_OUTL-
VCC_SPL
VCC_SPR
SP_OUTR-
SP_OUTR-
SP_OUTR+
SP_OUTR+
GND_SPR
VCC_LV1
VCC_LV2
AGC_DET
SP_INR
PREOUT_R
PRE_CHANGE-R
AGCOUT_R
AGCIN_R
C905 10uF_6.3v
C904 10uF_6.3v
C281 1uF_6.3v
C869 1uF_6.3v
C868 1uF_6.3v
SPK_OUT_L+
SPK_OUT_L-
SPK_OUT_R-
SPK_OUT_R+
HP_L
HP_L_JACK
HP_R_JACK
HP_R
R326 10K_5%
R322 7.68K_1%
C282 390pF_50v
R781 7.68K_1%
C903 390pF_50v
R325 10K_5%
C276 1uF_6.3v
AGC_LV1
AGC_LV2
R317 100K_5%
C277 2.2uF_6.3v
C274 1uF_6.3v
C275 820pF_25v
R319 3.3K_1%
R318 10K_1%
A_RIGHT
INVENTEC
TITLE
PT10SC AMP & MIC & HP
SIZE A3
CODE CS
DOC. NUMBER Model_No
REV X01
SHEET 57 OF 63
CHANGE by IEC951098
10-Dec-2007

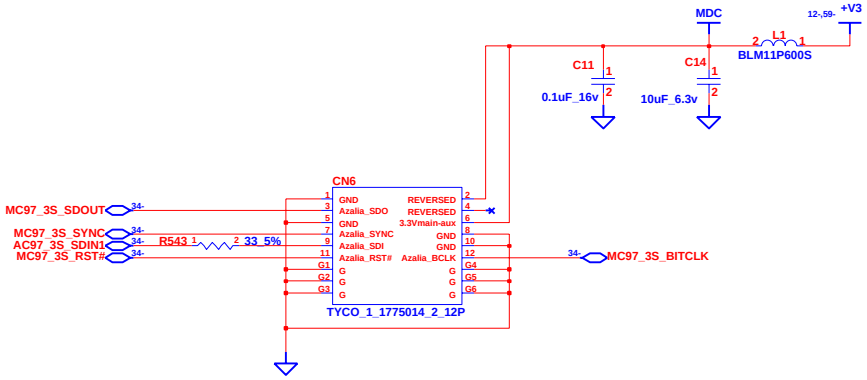

CHANGE by	IEC951098	30-Nov-2007	

INVENTEC

TITLE

PT10SC MDC1.5

SIZE	CODE	DOC. NUMBER	REV
A3	CS	*Model_No*	*X01*

SHEET 58 OF 63

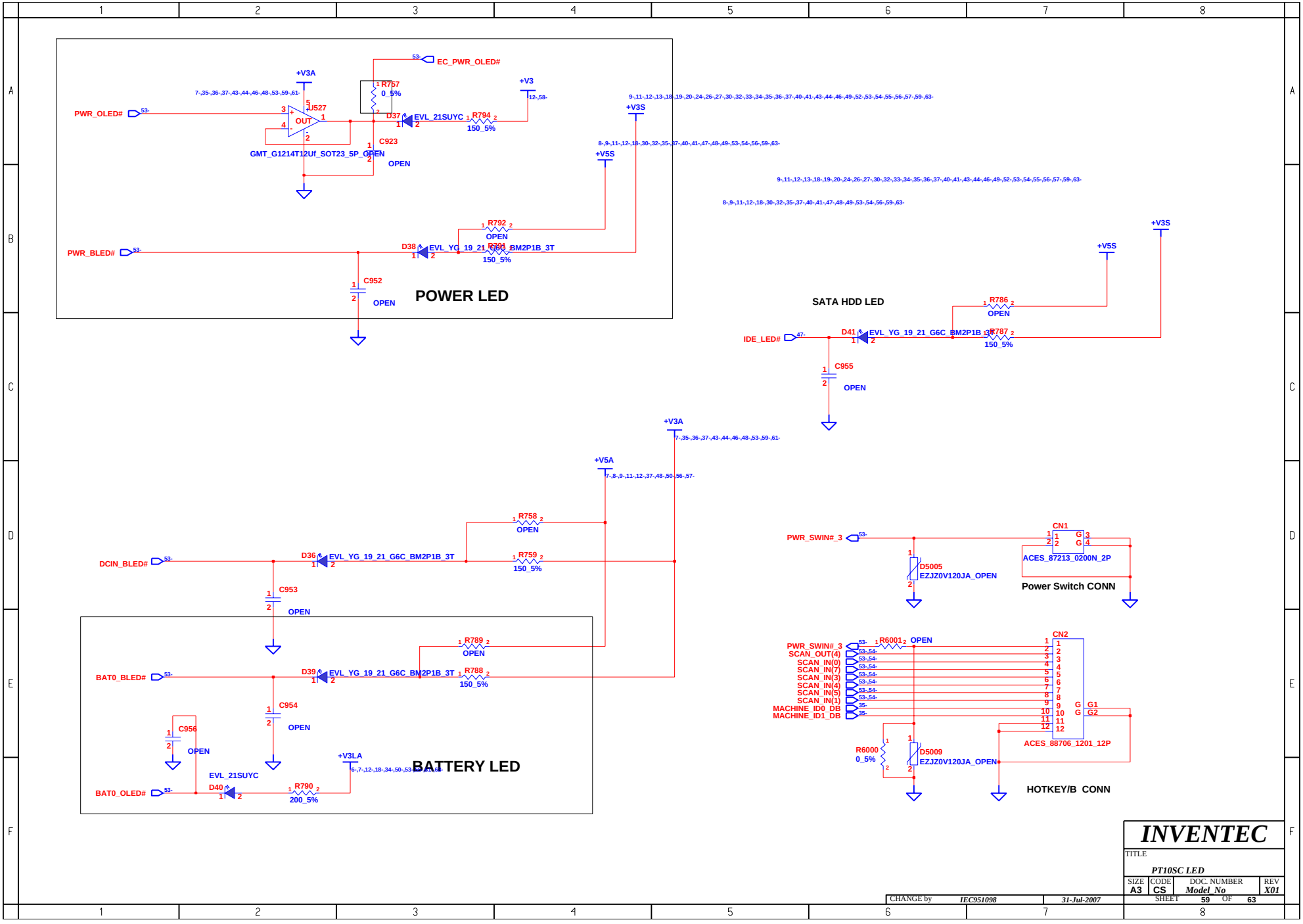
POWER LED
PWR_OLED#
EC_PWR_OLED#
+V3A
+V3
+V3S
+V5S
U527
OUT
GMT_G1214T12Uf_SOT23_5P_OPEN
R757
0_5%
D37
EVL_21SUYC
R794
150_5%
C923
OPEN
PWR_BLED#
D38
EVL_YG_19_21_G6C_BM2P1B_3T
R792
OPEN
R791
150_5%
C952
OPEN
SATA HDD LED
IDE_LED#
D41
EVL_YG_19_21_G6C_BM2P1B_3T
R786
OPEN
R787
150_5%
C955
OPEN
+V5A
DCIN_BLED#
D36
EVL_YG_19_21_G6C_BM2P1B_3T
R758
OPEN
R759
150_5%
C953
OPEN
BATTERY LED
BAT0_BLED#
D39
EVL_YG_19_21_G6C_BM2P1B_3T
R789
OPEN
R788
150_5%
C954
OPEN
C956
OPEN
+V3LA
EVL_21SUYC
BAT0_OLED#
D40
R790
200_5%
PWR_SWIN# 3
D5005
EZJZ0V120JA_OPEN
CN1
ACES_87213_0200N_2P
Power Switch CONN
PWR_SWIN# 3
SCAN_OUT(4)
SCAN_IN(0)
SCAN_IN(7)
SCAN_IN(3)
SCAN_IN(4)
SCAN_IN(5)
SCAN_IN(1)
MACHINE_ID0_DB
MACHINE_ID1_DB
R6001
OPEN
CN2
ACES_88706_1201_12P
R6000
0_5%
D5009
EZJZ0V120JA_OPEN
HOTKEY/B CONN
INVENTEC
TITLE
PT10SC LED
SIZE A3
CODE CS
DOC. NUMBER Model_No
REV X01
SHEET 59 OF 63
CHANGE by IEC951098
31-Jul-2007

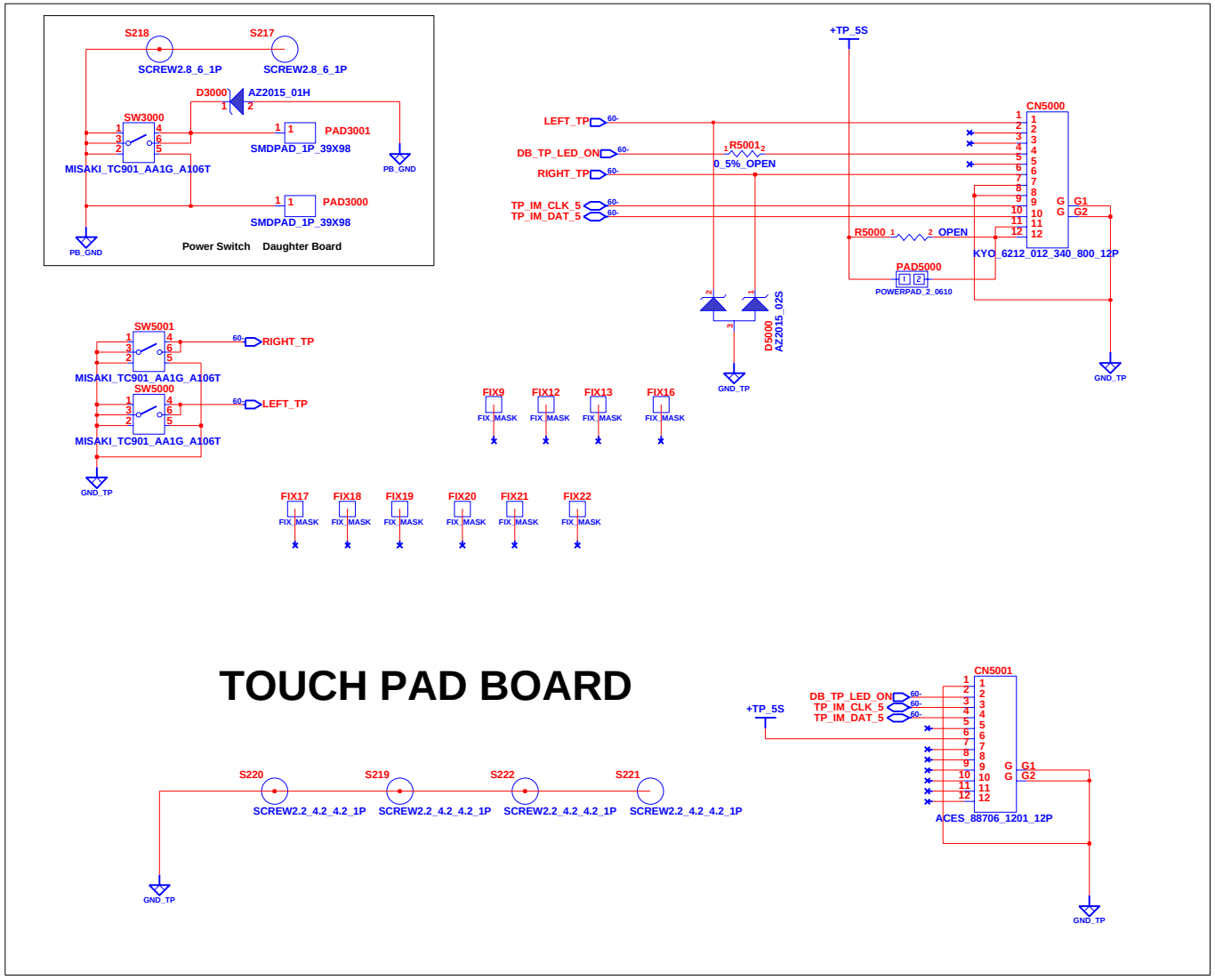

INVENTEC

TITLE: Touch Pad Board

SIZE	CODE	DOC. NUMBER	REV
A3	CS	Model_No	X01

CHANGE by IEC951098 5-Nov-2007

SHEET 60 OF 63

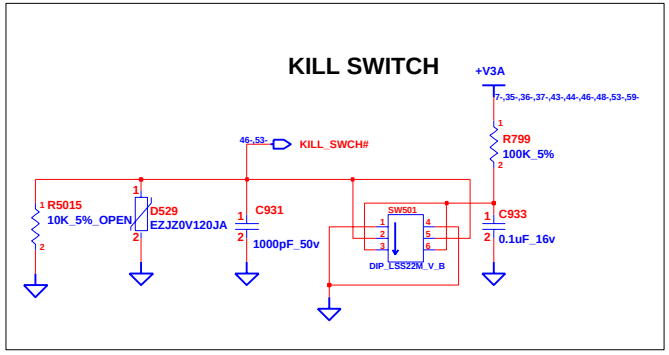

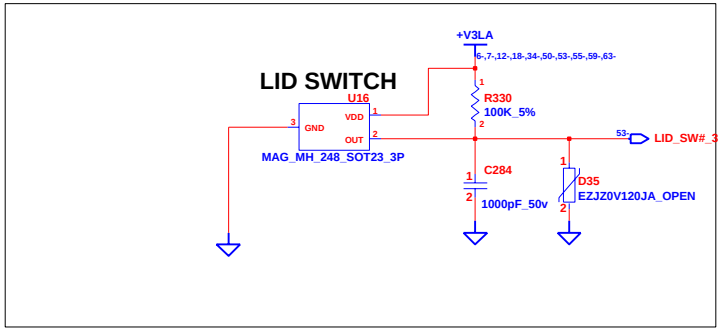

CHANGE by	IEC951098	31-Jul-2007	

INVENTEC

TITLE

PT10SC Kill SW & Lid SW

SIZE	CODE	DOC. NUMBER	REV
A3	CS	*Model_No*	*X01*

SHEET 61 OF 63

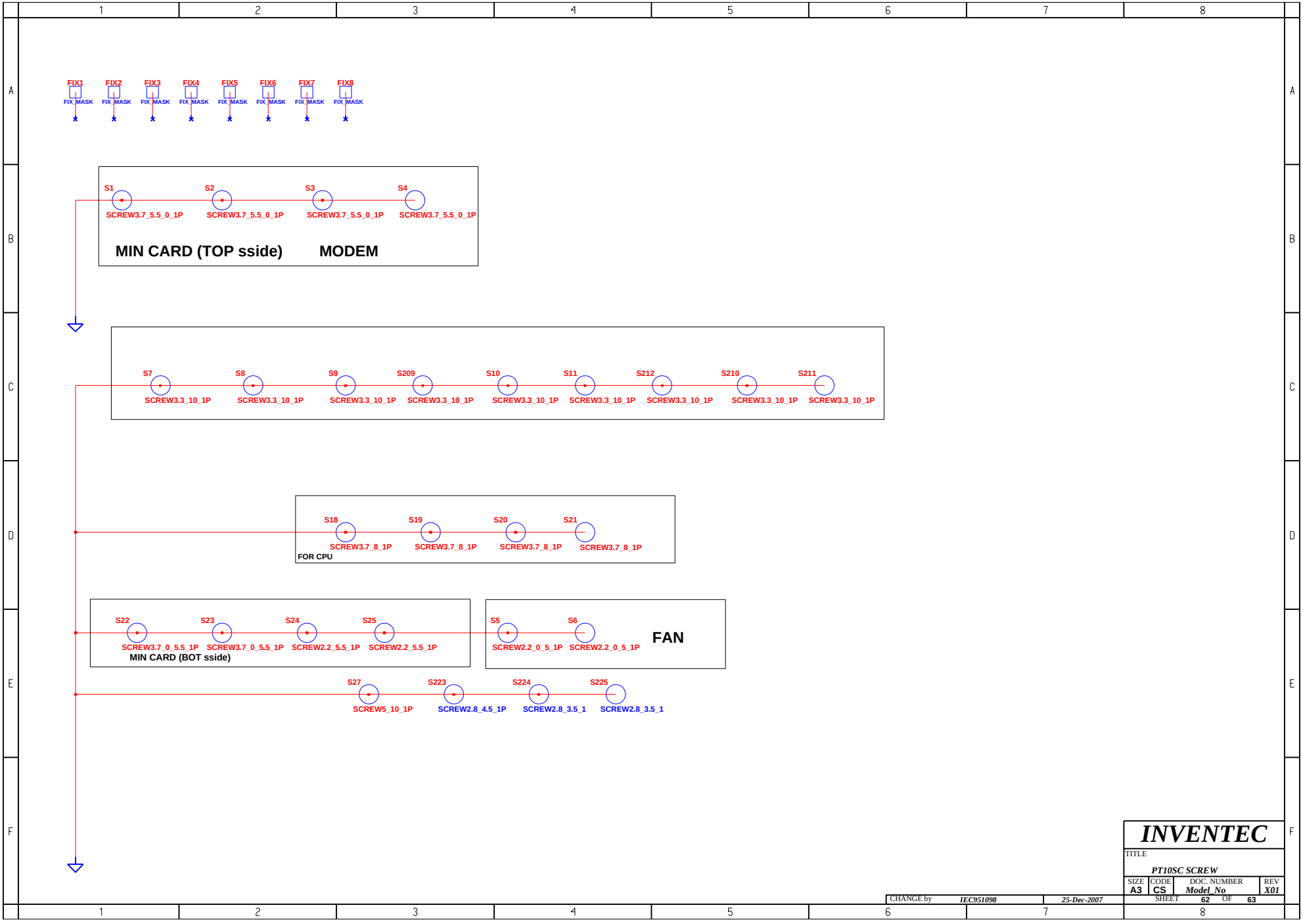

CHANGE by	IEC951098	25-Dec-2007	

INVENTEC

TITLE: *PT10SC SCREW*

SIZE	CODE	DOC. NUMBER	REV
A3	CS	*Model_No*	*X01*

SHEET 62 OF 63

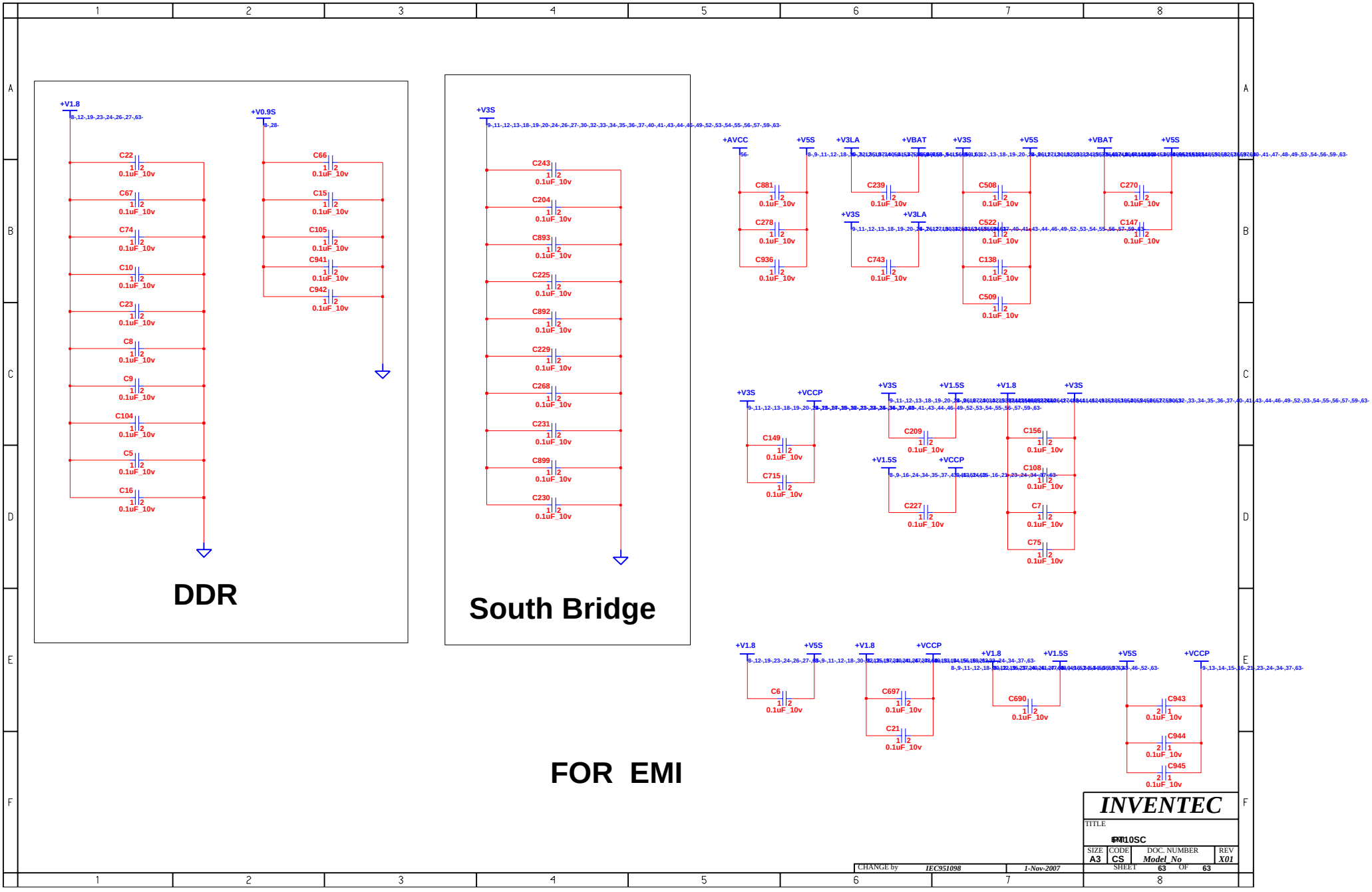
DDR
+V1.8
C22
C67
C74
C10
C23
C8
C9
C104
C5
C16
+V0.9S
C66
C15
C105
C941
C942
0.1uF_10v
South Bridge
+V3S
C243
C204
C893
C225
C892
C229
C268
C231
C899
C230
+AVCC
C881
C278
C936
+V5S
+V3LA
C239
C743
+VBAT
C508
C522
C138
C509
C270
C147
+V1.5S
+VCCP
C149
C715
C209
C227
C156
C108
C7
C75
C6
C697
C21
C690
C943
C944
C945
FOR EMI
INVENTEC
TITLE
EMI10SC
SIZE A3
CODE CS
DOC. NUMBER Model_No
REV X01
CHANGE by IEC951098
1-Nov-2007
SHEET 63 OF 63