INVENTEC

PRELIMINARY TEST

07A99

Pre-MP BUILD **2007 12 20**

INVENTEC			
TITLE 07A99 Preliminary Test			
SIZE A3	CODE CS	DOC. NUMBER	REV X01
CHANGE by KOBE	23-Jan-2008	SHEET 1 OF 63	

TABLE OF CONTENTS

PAGE

1.COVER PAGE
2.INDEX
3.BLOCK DIAGRAM
4.POWER SEQUENCE BLOCK
5-12.SYSTEM POWER
13.CLOCK GENERATOR
14.CPU Merom1
15.CPU Merom2
16.CPU Merom3
17.CPU Merom4
18.FAN & THERMAL CONTROLLER
19.N/B Crestline 1
20.N/B Crestline 2
21.N/B Crestline 3
22.N/B Crestline 4
23.N/B Crescline 5
24.N/B Crestline 6
25.N/B Crestline 7
26.DDR2 DIMM0
27.DDR2 DIMM1
28.DDR DAMPING
29.CIR
30.CRT CONN
31.S-VIDEO CONN
32.LCM CONN

PAGE

33. HDMI TRANSMITTER
34.HDMI CONN & CEC
35.S/B ICH8 1
36.S/B ICH8 2
37.S/B ICH8 3
38.S/B ICH8 4
39.S/B ICH8 5
40.SATA CONN
41.USB CONN
42.Felica & Camera CONN
43.Bluetooth CONN
44.EC
45.K/B & TP/B CONN
46.AZALIA CODEC
47.AUDIO AMP
48.Audio JACKs
49.LAN Controller
50.RJ45 & Transformer
51.ODD CONN
52.1394/Cardreader Controller
53.5 in 1 & 1394 CONN
54.Express Card CONN
55.ROBSON & WLAN
56.Broadcom Accelerator
57.MDC 1.5 CONN

PAGE

58.LED(M/B) & HOTKEY/B CONN
59.Pick Button & Fingerprint Board
60.KILL SWITCH& HALL SENSOR
61.SCREW & EMI CAP
62.FM TUNER BOARD
63.FINGER PRINT BOARD

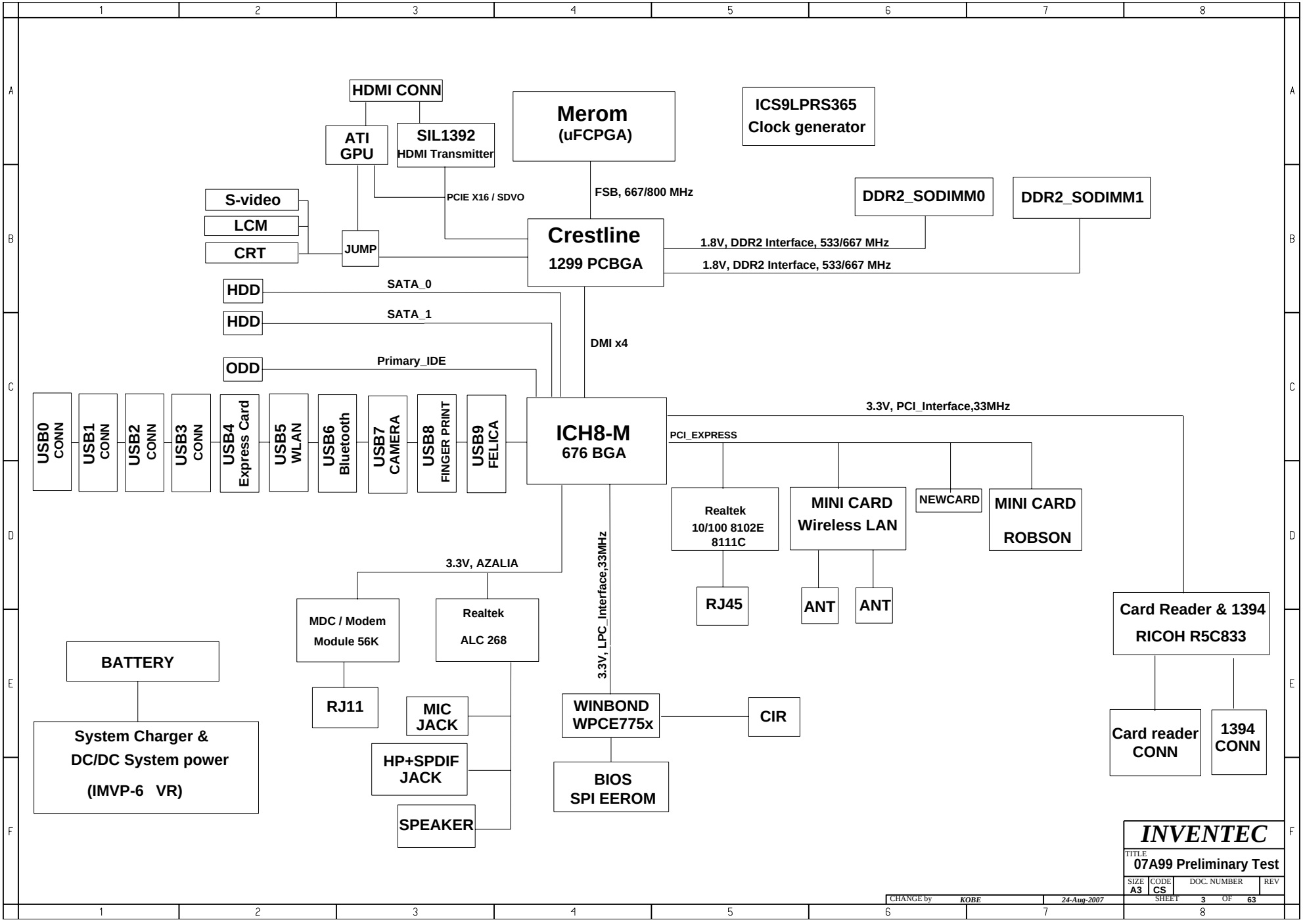
HDMI CONN
ATI GPU
SIL1392 HDMI Transmitter
Merom (uFCPGA)
ICS9LPRS365 Clock generator
S-video
LCM
CRT
JUMP
PCIE X16 / SDVO
FSB, 667/800 MHz
Crestline 1299 PCBGA
DDR2_SODIMM0
DDR2_SODIMM1
1.8V, DDR2 Interface, 533/667 MHz
1.8V, DDR2 Interface, 533/667 MHz
HDD
SATA_0
HDD
SATA_1
ODD
Primary_IDE
DMI x4
USB0 CONN
USB1 CONN
USB2 CONN
USB3 CONN
USB4 Express Card
USB5 WLAN
USB6 Bluetooth
USB7 CAMERA
USB8 FINGER PRINT
USB9 FELICA
ICH8-M 676 BGA
3.3V, PCI_Interface,33MHz
PCI_EXPRESS
Realtek 10/100 8102E 8111C
MINI CARD Wireless LAN
NEWCARD
MINI CARD ROBSON
RJ45
ANT
ANT
3.3V, AZALIA
3.3V, LPC_Interface,33MHz
MDC / Modem Module 56K
Realtek ALC 268
RJ11
MIC JACK
HP+SPDIF JACK
SPEAKER
WINBOND WPCE775x
CIR
BIOS SPI EEROM
Card Reader & 1394 RICOH R5C833
Card reader CONN
1394 CONN
BATTERY
System Charger & DC/DC System power (IMVP-6 VR)
INVENTEC
TITLE
07A99 Preliminary Test
SIZE A3
CODE CS
DOC. NUMBER
REV
CHANGE by KOBE
24-Aug-2007
SHEET 3 OF 63

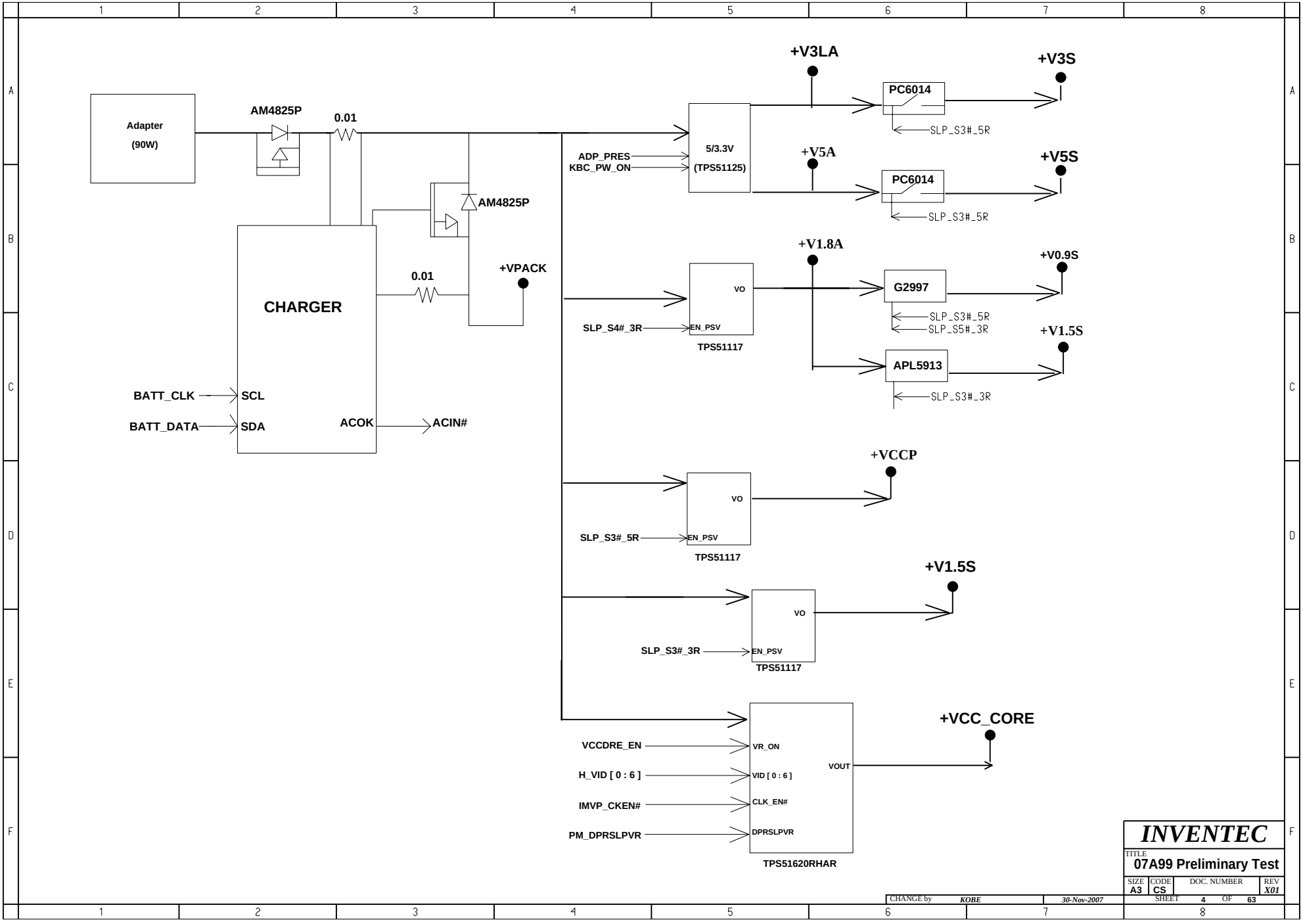
Adapter
(90W)
AM4825P
0.01
AM4825P
0.01
+VPACK
CHARGER
BATT_CLK
SCL
BATT_DATA
SDA
ACOK
ACIN#
ADP_PRES
KBC_PW_ON
5/3.3V
(TPS51125)
+V3LA
PC6014
+V3S
SLP_S3#_5R
+V5A
PC6014
+V5S
SLP_S3#_5R
+V1.8A
VO
SLP_S4#_3R
EN_PSV
TPS51117
G2997
+V0.9S
SLP_S3#_5R
SLP_S5#_3R
APL5913
+V1.5S
SLP_S3#_3R
+VCCP
VO
SLP_S3#_5R
EN_PSV
TPS51117
+V1.5S
VO
SLP_S3#_3R
EN_PSV
TPS51117
+VCC_CORE
VCCDRE_EN
H_VID [0 : 6]
IMVP_CKEN#
PM_DPRSLPVR
VR_ON
VID [0 : 6]
CLK_EN#
DPRSLPVR
VOUT
TPS51620RHAR
INVENTEC
TITLE
07A99 Preliminary Test
SIZE A3
CODE CS
DOC. NUMBER
REV X01
CHANGE by KOBE
30-Nov-2007
SHEET 4 OF 63

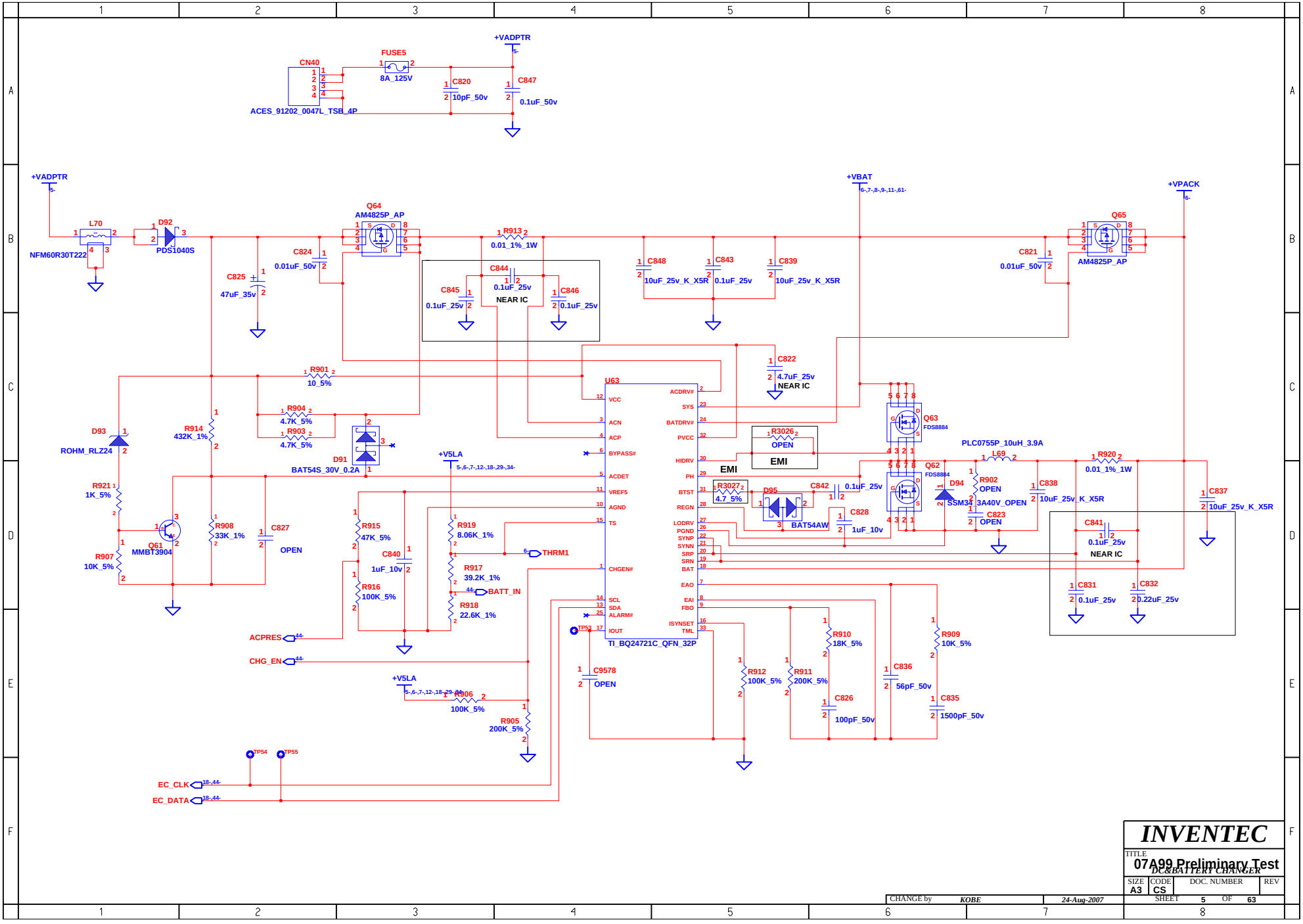

INVENTEC

TITLE 07A99 Preliminary Test

DC&BATTERY CHARGER

SIZE	CODE	DOC. NUMBER	REV
A3	CS		

SHEET 5 OF 63

CHANGE by KOBE 24-Aug-2007

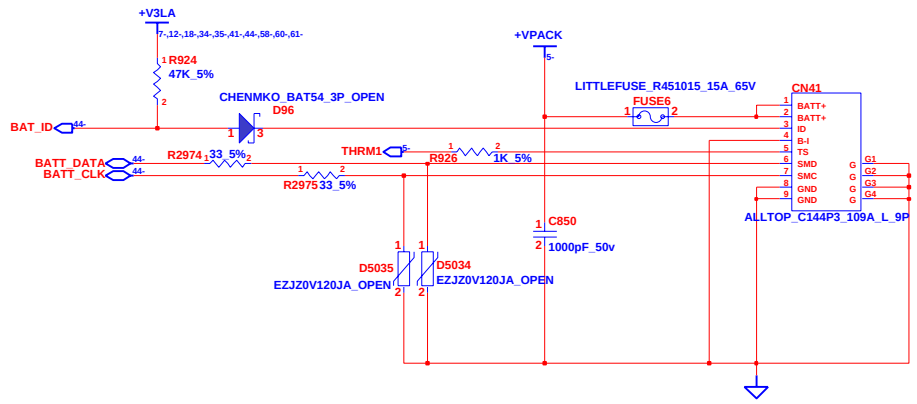

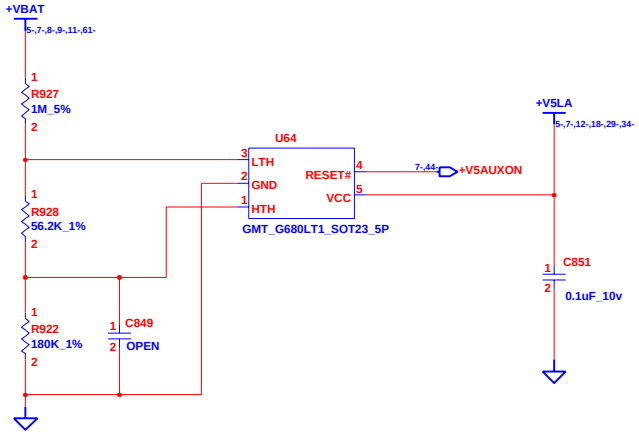

CHANGE by	KOBE	24-Aug-2007	

INVENTEC

TITLE
07A99 Preliminary Test
BATTERY CONN

SIZE	CODE	DOC. NUMBER	REV
A3	CS		

SHEET 6 OF 63

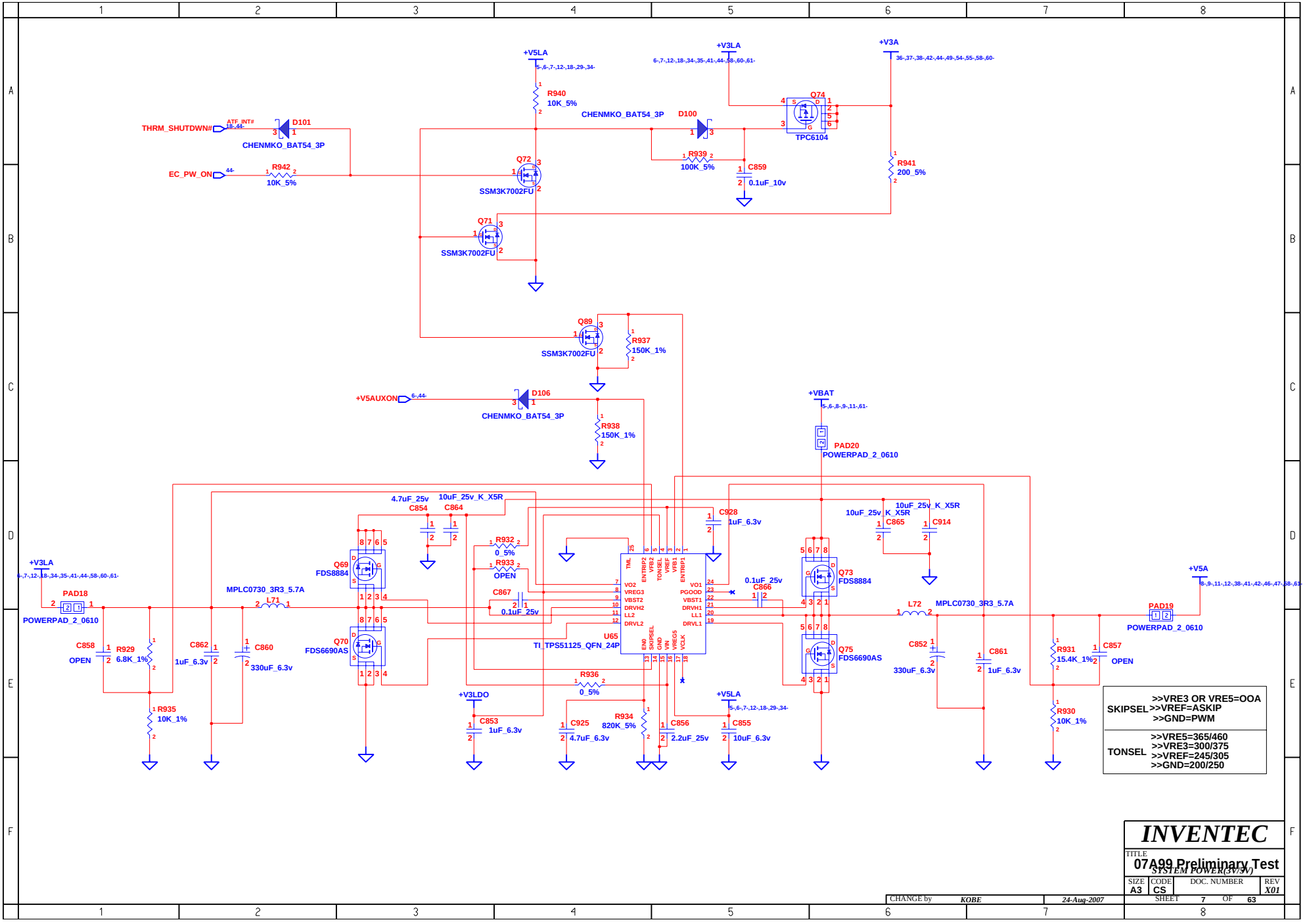
+V5LA
+V3LA
+V3A
THRM_SHUTDWN#
D101
CHENMKO_BAT54_3P
EC_PW_ON
R942
10K_5%
R940
10K_5%
D100
CHENMKO_BAT54_3P
Q74
TPC6104
R939
100K_5%
C859
0.1uF_10v
R941
200_5%
Q72
SSM3K7002FU
Q71
SSM3K7002FU
Q89
SSM3K7002FU
R937
150K_1%
+V5AUXON
D106
CHENMKO_BAT54_3P
R938
150K_1%
+VBAT
PAD20
POWERPAD_2_0610
4.7uF_25v
C854
10uF_25v_K_X5R
C864
C928
1uF_6.3v
10uF_25v_K_X5R
C865
C914
R932
0_5%
R933
OPEN
C867
0.1uF_25v
0.1uF_25v
C866
Q69
FDS8884
Q70
FDS6690AS
Q73
FDS8884
Q75
FDS6690AS
+V3LA
PAD18
POWERPAD_2_0610
MPLC0730_3R3_5.7A
L71
L72
MPLC0730_3R3_5.7A
+V5A
PAD19
POWERPAD_2_0610
C858
OPEN
R929
6.8K_1%
C862
1uF_6.3v
C860
330uF_6.3v
C852
330uF_6.3v
C861
1uF_6.3v
R931
15.4K_1%
C857
OPEN
R935
10K_1%
R930
10K_1%
U65
TI_TPS51125_QFN_24P
TMI
ENTRIP2
VFB2
TONSEL
VREF
VFB1
ENTRIP1
VO2
VREG3
VBST2
DRVH2
LL2
DRVL2
VO1
PGOOD
VBST1
DRVH1
LL1
DRVL1
EN0
SKIPSEL
GND
PR
VREG5
VCLK
R936
0_5%
+V3LDO
C853
1uF_6.3v
C925
4.7uF_6.3v
R934
820K_5%
C856
2.2uF_25v
+V5LA
C855
10uF_6.3v
SKIPSEL
>>VRE3 OR VRE5=OOA
>>VREF=ASKIP
>>GND=PWM
TONSEL
>>VRE5=365/460
>>VRE3=300/375
>>VREF=245/305
>>GND=200/250
INVENTEC
TITLE
07A99 Preliminary Test
SYSTEM POWER(3V/5V)
SIZE A3
CODE CS
DOC. NUMBER
REV X01
CHANGE by KOBE
24-Aug-2007
SHEET 7 OF 63

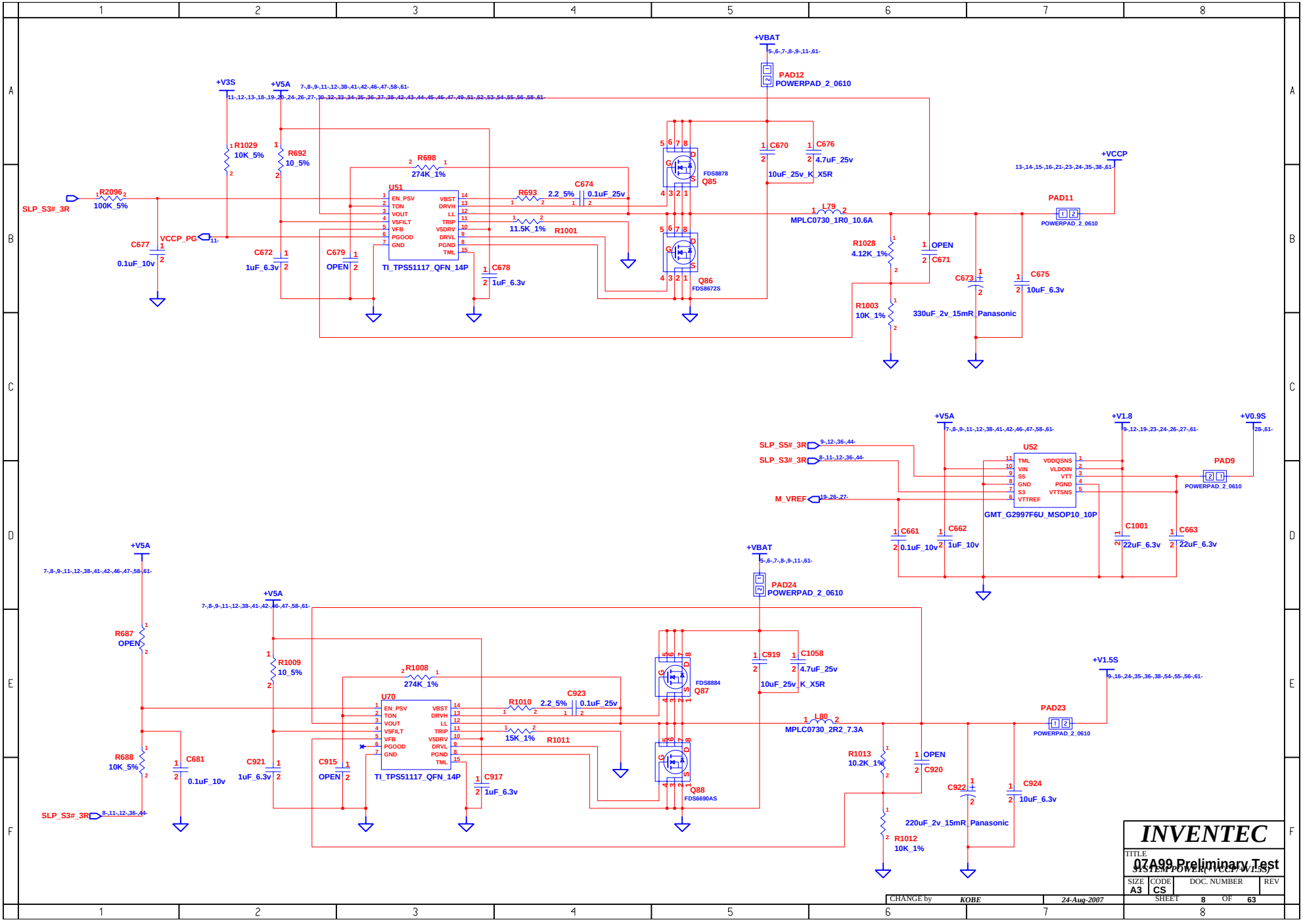
+VBAT
PAD12
POWERPAD_2_0610
+V3S
+V5A
R1029
10K_5%
R692
10_5%
R698
274K_1%
U51
EN_PSV
TON
VOUT
VSFILT
VFB
PGOOD
GND
VBST
DRVH
LL
TRIP
VSDRV
DRVL
PGND
TML
TI_TPS51117_QFN_14P
R2096
100K_5%
SLP_S3#_3R
VCCP_PG
C677
0.1uF_10v
C672
1uF_6.3v
C679
OPEN
C678
1uF_6.3v
R693
2.2_5%
C674
0.1uF_25v
11.5K_1%
R1001
FDS8878
Q85
Q86
FDS8672S
C670
10uF_25v_K_X5R
C676
4.7uF_25v
L79
MPLC0730_1R0_10.6A
+VCCP
PAD11
POWERPAD_2_0610
R1028
4.12K_1%
C671
OPEN
C673
330uF_2v_15mR_Panasonic
C675
10uF_6.3v
R1003
10K_1%
+V5A
+V1.8
+V0.9S
SLP_S5#_3R
SLP_S3#_3R
M_VREF
U52
TML
VIN
S5
GND
S3
VTTREF
VDDQSNS
VLDOIN
VTT
PGND
VTTSNS
GMT_G2997F6U_MSOP10_10P
PAD9
POWERPAD_2_0610
C661
0.1uF_10v
C662
1uF_10v
C1001
22uF_6.3v
C663
22uF_6.3v
+V5A
R687
OPEN
R1009
10_5%
R1008
274K_1%
U70
EN_PSV
TON
VOUT
VSFILT
VFB
PGOOD
GND
VBST
DRVH
LL
TRIP
VSDRV
DRVL
PGND
TML
TI_TPS51117_QFN_14P
R1010
2.2_5%
C923
0.1uF_25v
15K_1%
R1011
FDS8884
Q87
Q88
FDS6690AS
+VBAT
PAD24
POWERPAD_2_0610
C919
10uF_25v_K_X5R
C1058
4.7uF_25v
L80
MPLC0730_2R2_7.3A
+V1.5S
PAD23
POWERPAD_2_0610
R688
10K_5%
C681
0.1uF_10v
C921
1uF_6.3v
C915
OPEN
C917
1uF_6.3v
SLP_S3#_3R
R1013
10.2K_1%
C920
OPEN
C922
220uF_2v_15mR_Panasonic
C924
10uF_6.3v
R1012
10K_1%
INVENTEC
TITLE
07A99 Preliminary Test
SYSTEM POWER(VCCP/+V1.5S)
SIZE A3
CODE CS
DOC. NUMBER
REV
CHANGE by KOBE
24-Aug-2007
SHEET 8 OF 63

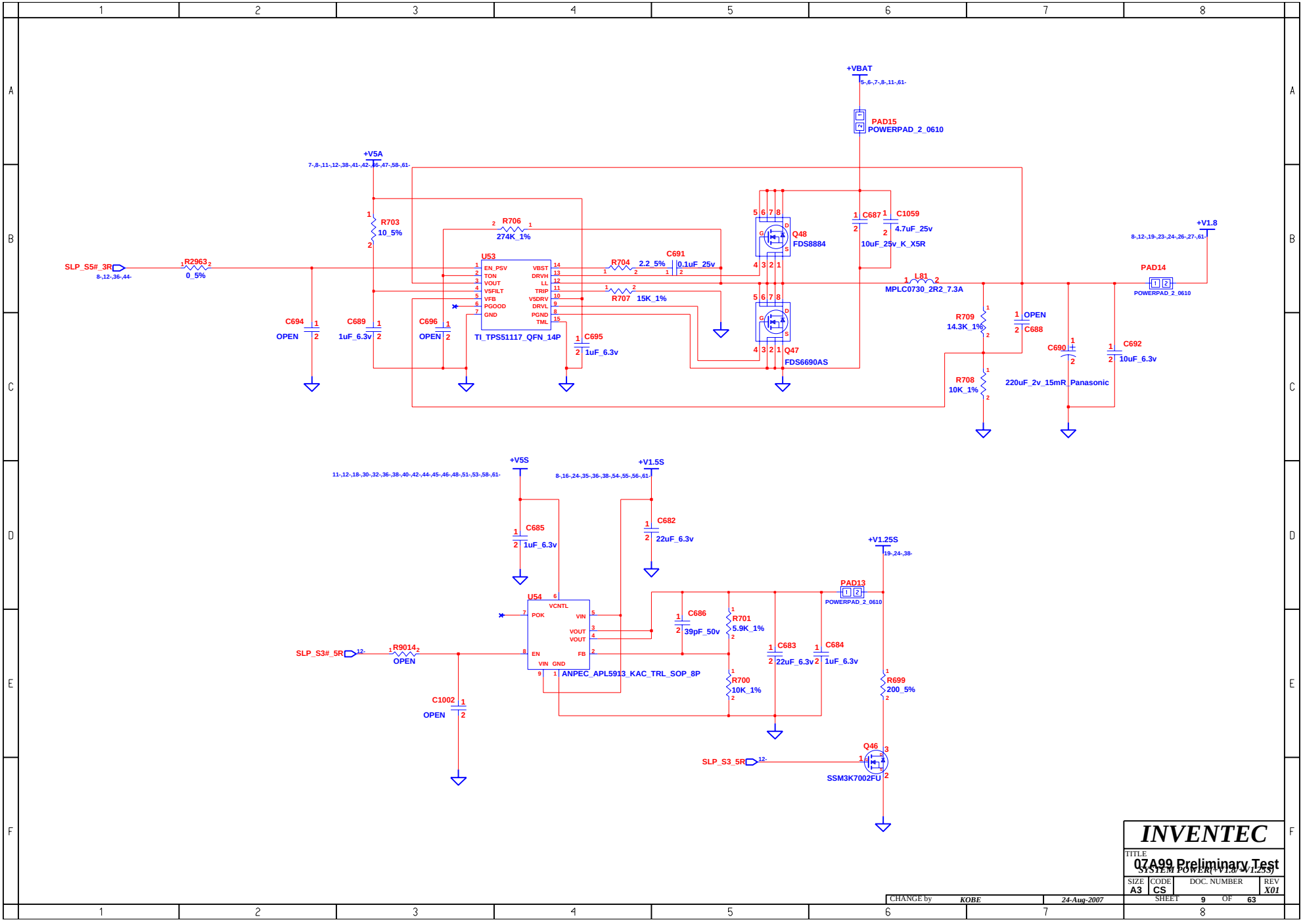

INVENTEC

TITLE: 07A99 Preliminary Test
SYSTEM POWER(+V1.8/+V1.25S)

SIZE	CODE	DOC. NUMBER	REV
A3	CS		X01

CHANGE by KOBE 24-Aug-2007

SHEET 9 OF 63

BLANK

INVENTEC			
TITLE 07A99 Preliminary Test			
SIZE A3	CODE CS	DOC. NUMBER	REV X01
CHANGE by KOBE	30-Nov-2007	SHEET 10 OF 63	

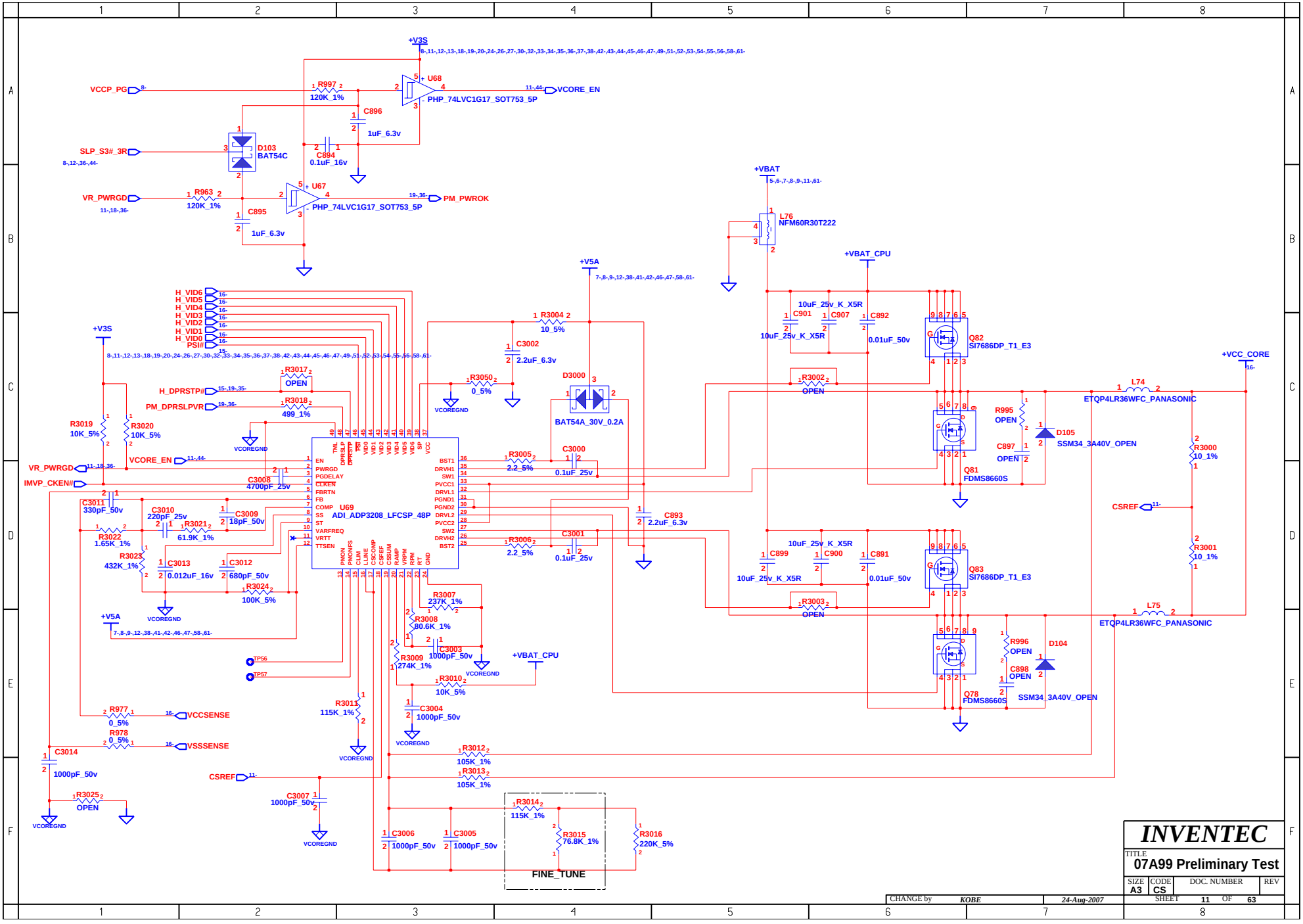
+V3S
VCCP_PG
R997 120K_1%
U68
PHP_74LVC1G17_SOT753_5P
VCORE_EN
C896 1uF_6.3v
C894 0.1uF_16v
D103 BAT54C
SLP_S3#_3R
VR_PWRGD
R963 120K_1%
U67
PHP_74LVC1G17_SOT753_5P
PM_PWROK
C895 1uF_6.3v
+VBAT
L76 NFM60R30T222
+VBAT_CPU
+V5A
H_VID6
H_VID5
H_VID4
H_VID3
H_VID2
H_VID1
H_VID0
PSI#
H_DPRSTP#
PM_DPRSLPVR
R3017 OPEN
R3018 499_1%
R3019 10K_5%
R3020 10K_5%
VCORE_EN
VR_PWRGD
IMVP_CKEN#
C3008 4700pF_25v
C3011 330pF_50v
C3010 220pF_25v
R3021 61.9K_1%
C3009 18pF_50v
R3022 1.65K_1%
R3023 432K_1%
C3013 0.012uF_16v
C3012 680pF_50v
R3024 100K_5%
U69
ADI_ADP3208_LFCSP_48P
R3004 10_5%
C3002 2.2uF_6.3v
R3050 0_5%
VCOREGND
D3000 BAT54A_30V_0.2A
R3005 2.2_5%
C3000 0.1uF_25v
C3001 0.1uF_25v
R3006 2.2_5%
C893 2.2uF_6.3v
R3007 237K_1%
R3008 80.6K_1%
C3003 1000pF_50v
R3009 274K_1%
R3010 10K_5%
C3004 1000pF_50v
R3011 115K_1%
R3012 105K_1%
R3013 105K_1%
TP56
TP57
R977 0_5%
VCCSENSE
R978 0_5%
VSSSENSE
C3014 1000pF_50v
CSREF
R3025 OPEN
C3007 1000pF_50v
C3006 1000pF_50v
C3005 1000pF_50v
R3014 115K_1%
R3015 76.8K_1%
R3016 220K_5%
FINE_TUNE
C901 10uF_25v_K_X5R
C907 10uF_25v_K_X5R
C892 0.01uF_50v
Q82 SI7686DP_T1_E3
R3002 OPEN
R995 OPEN
C897 OPEN
D105 SSM34_3A40V_OPEN
Q81 FDMS8660S
L74 ETQP4LR36WFC_PANASONIC
+VCC_CORE
R3000 10_1%
R3001 10_1%
C899 10uF_25v_K_X5R
C900 10uF_25v_K_X5R
C891 0.01uF_50v
Q83 SI7686DP_T1_E3
R3003 OPEN
L75 ETQP4LR36WFC_PANASONIC
R996 OPEN
C898 OPEN
D104 SSM34_3A40V_OPEN
Q78 FDMS8660S
INVENTEC
TITLE
07A99 Preliminary Test
SIZE A3
CODE CS
DOC. NUMBER
REV
SHEET 11 OF 63
CHANGE by KOBE
24-Aug-2007

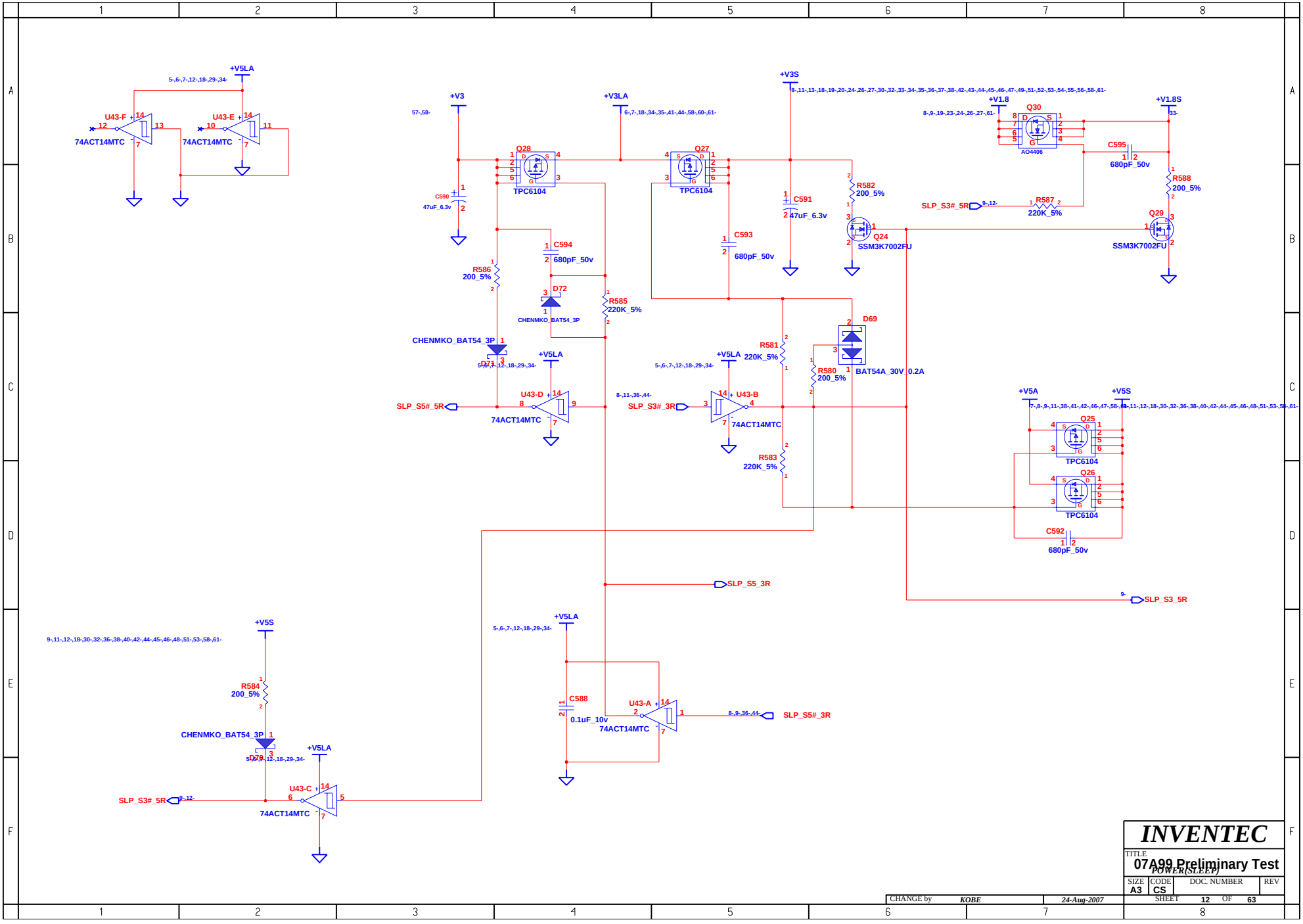

INVENTEC			
TITLE 07A99 Preliminary Test POWER(SLEEP)			
SIZE A3	CODE CS	DOC. NUMBER	REV
CHANGE by KOBE	24-Aug-2007	SHEET 12 OF 63	

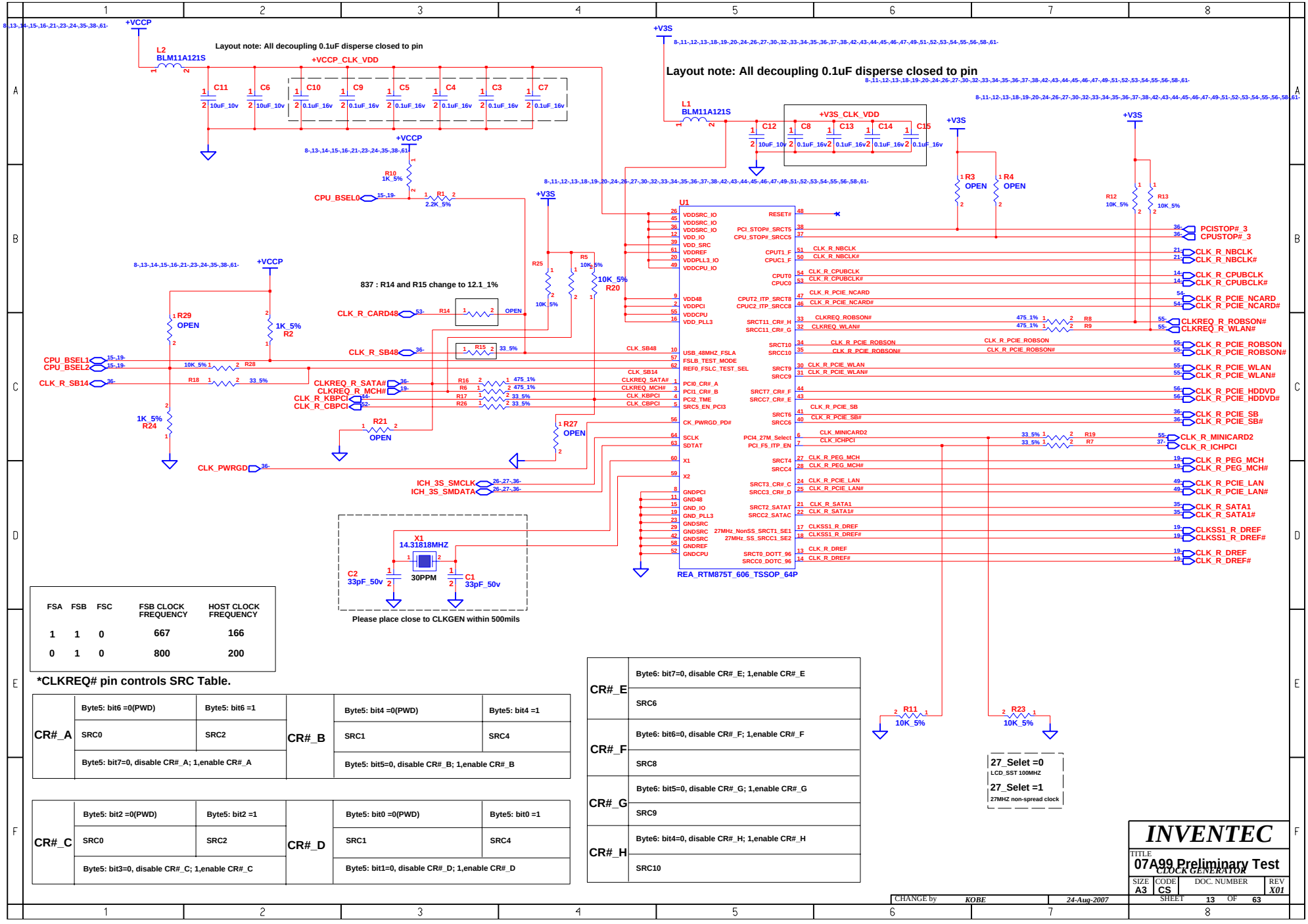

FSA	FSB	FSC	FSB CLOCK FREQUENCY	HOST CLOCK FREQUENCY
1	1	0	667	166
0	1	0	800	200

***CLKREQ# pin controls SRC Table.**

CR#_A	Byte5: bit6 =0(PWD)	Byte5: bit6 =1	CR#_B	Byte5: bit4 =0(PWD)	Byte5: bit4 =1
	SRC0	SRC2		SRC1	SRC4
	Byte5: bit7=0, disable CR#_A; 1,enable CR#_A			Byte5: bit5=0, disable CR#_B; 1,enable CR#_B	

CR#_C	Byte5: bit2 =0(PWD)	Byte5: bit2 =1	CR#_D	Byte5: bit0 =0(PWD)	Byte5: bit0 =1
	SRC0	SRC2		SRC1	SRC4
	Byte5: bit3=0, disable CR#_C; 1,enable CR#_C			Byte5: bit1=0, disable CR#_D; 1,enable CR#_D	

CR#_E	Byte6: bit7=0, disable CR#_E; 1,enable CR#_E
	SRC6
CR#_F	Byte6: bit6=0, disable CR#_F; 1,enable CR#_F
	SRC8
CR#_G	Byte6: bit5=0, disable CR#_G; 1,enable CR#_G
	SRC9
CR#_H	Byte6: bit4=0, disable CR#_H; 1,enable CR#_H
	SRC10

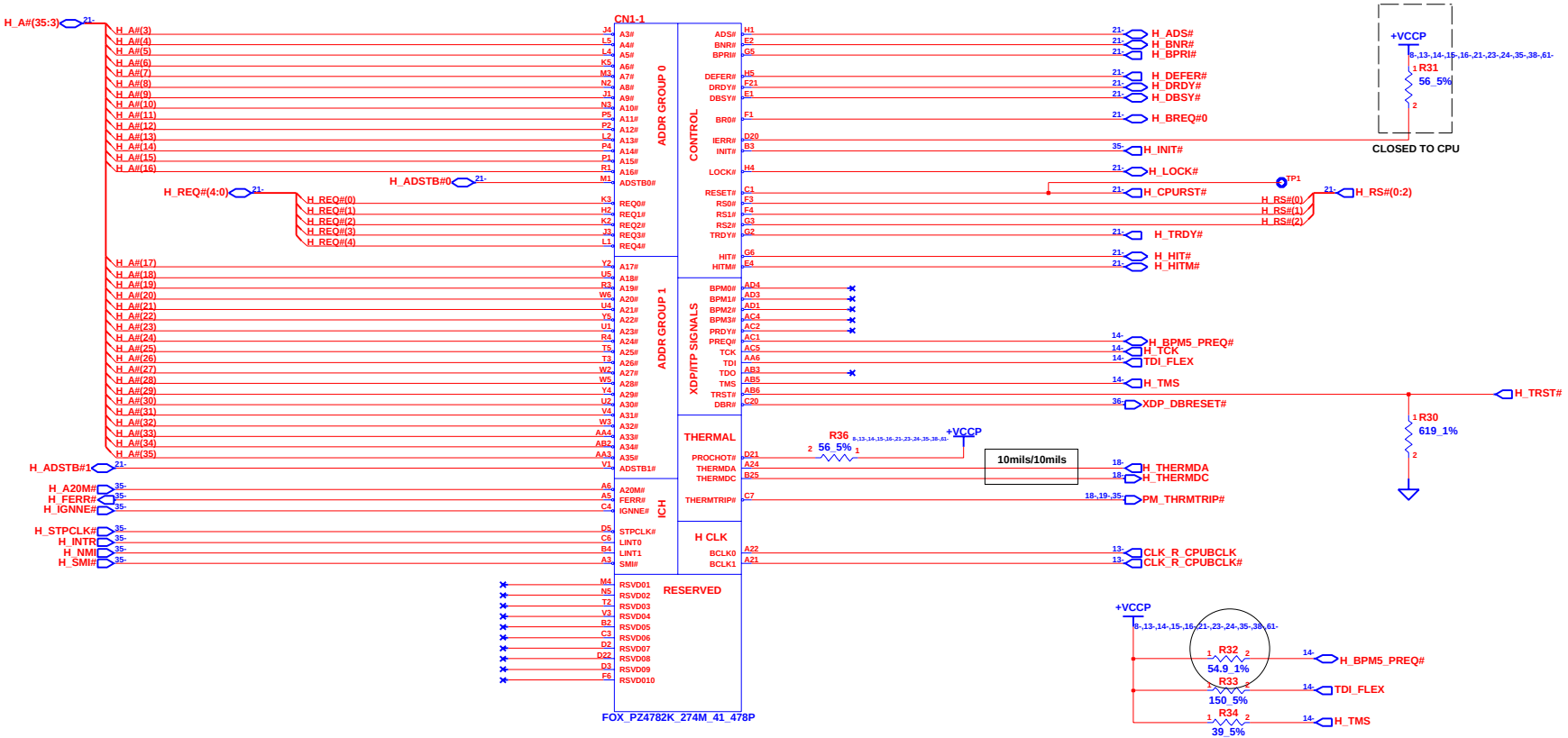

PM_THRMTRIP# should be T at CPU

INVENTEC			
TITLE 07A99 Preliminary Test CPU-1			
SIZE A3	CODE CS	DOC. NUMBER	REV X01
CHANGE by KOBE	24-Aug-2007	SHEET 14 OF 63	

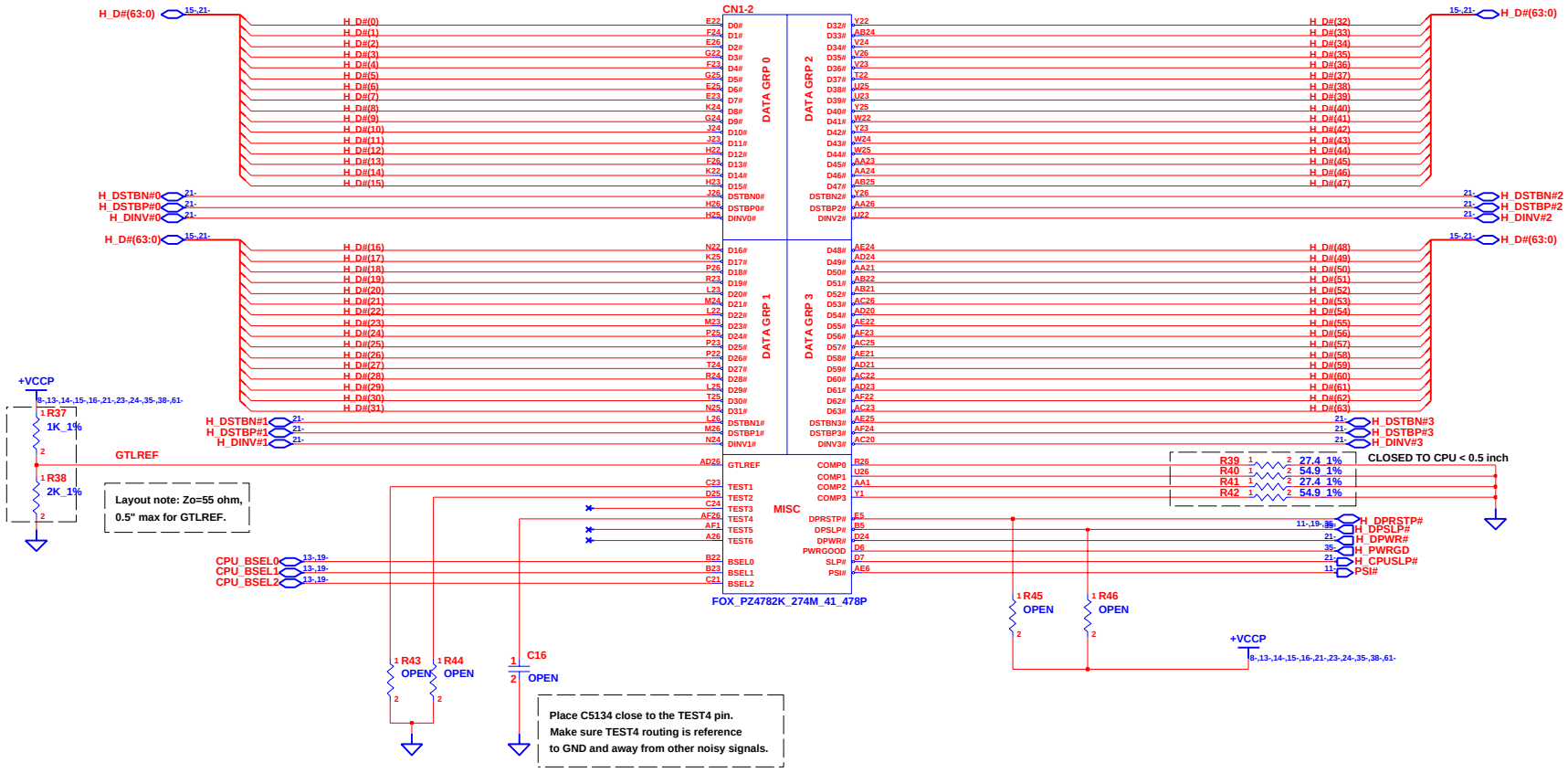

INVENTEC

TITLE
07A99 Preliminary Test
CPU-2

SIZE	CODE	DOC. NUMBER	REV
A3	CS		X01

CHANGE by KOBE 30-Nov-2007

SHEET 15 OF 63

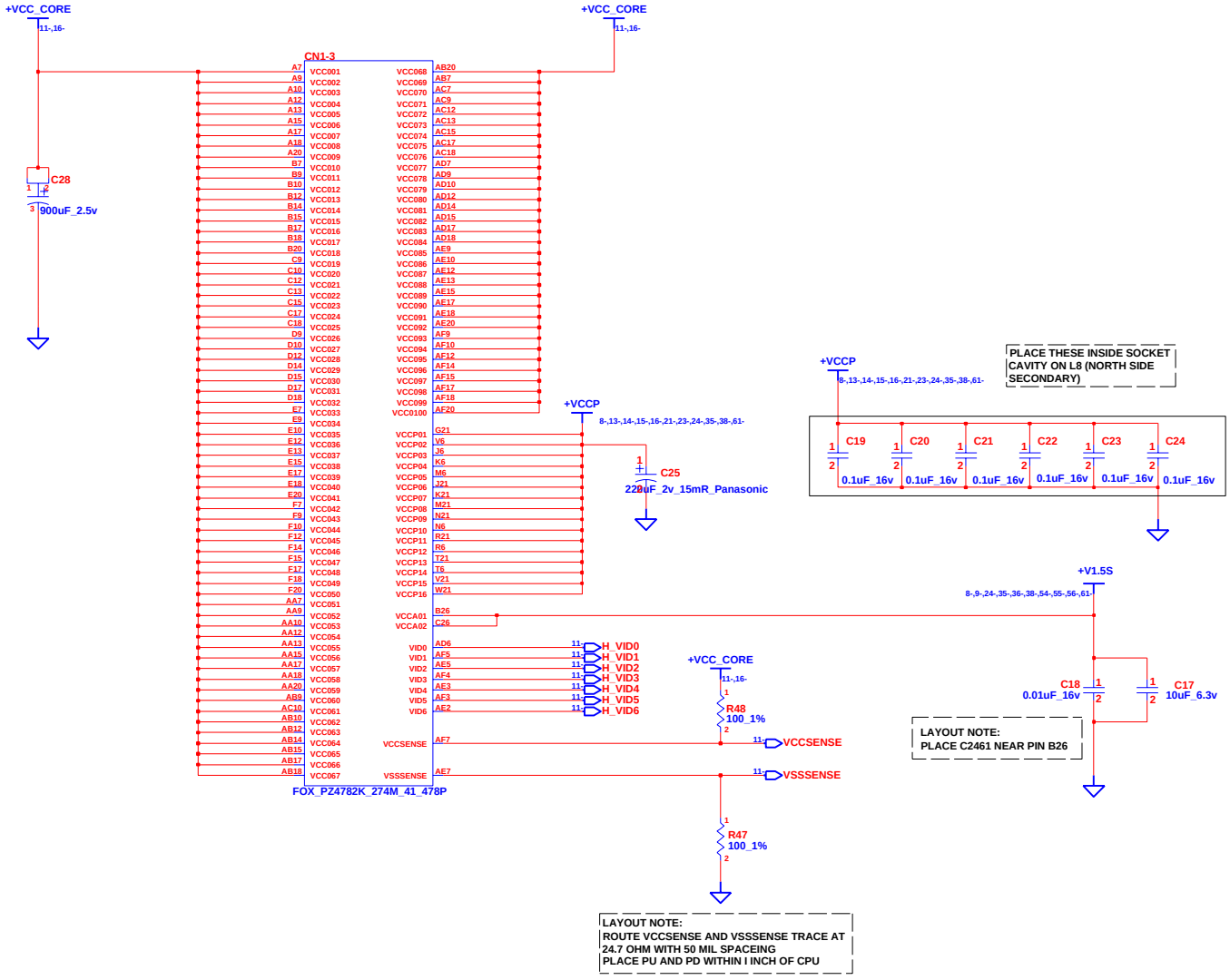

INVENTEC

TITLE
07A99 Preliminary Test
CPU-3

SIZE	CODE	DOC. NUMBER	REV
A3	CS		

CHANGE by KOBE 24-Aug-2007

SHEET 16 OF 63

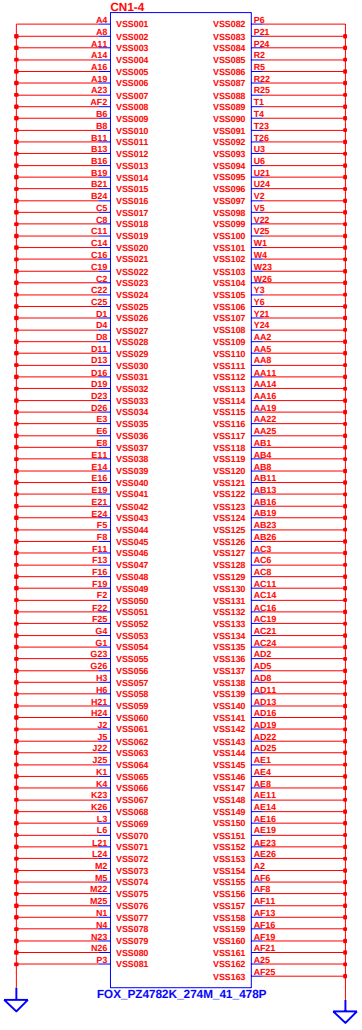

CHANGE by	KOBE	24-Aug-2007	

INVENTEC

TITLE
07A99 Preliminary Test *CPU-4*

SIZE	CODE	DOC. NUMBER	REV
A3	CS		

SHEET 17 OF 63

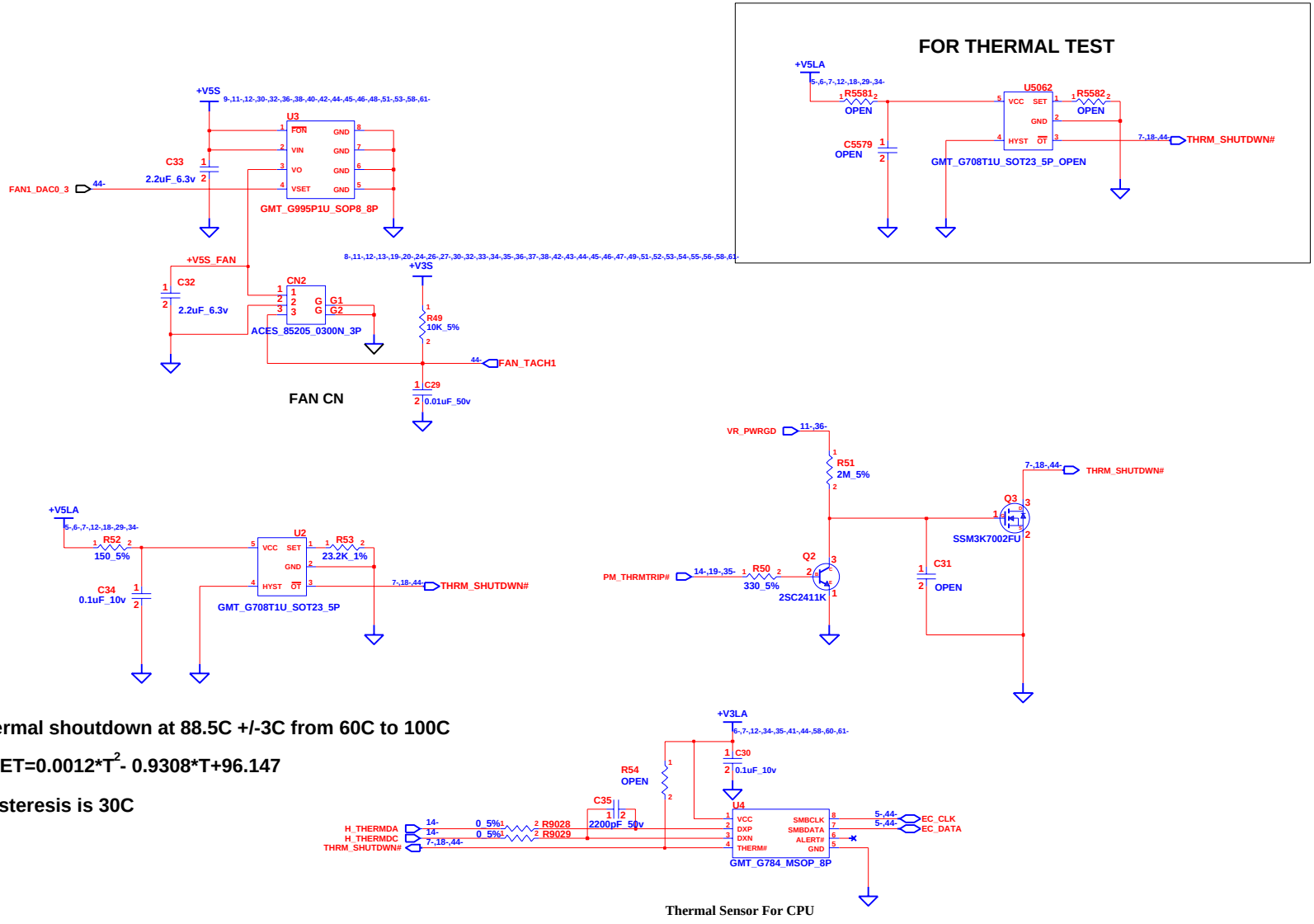

Thermal shoutdown at 88.5C +/-3C from 60C to 100C

RSET=0.0012*T^2- 0.9308*T+96.147

Hysteresis is 30C

INVENTEC			
TITLE: 07A99 Preliminary Test THERMAL&FAN CONTROLLER			
SIZE: A3	CODE: CS	DOC. NUMBER	REV: X01
CHANGE by: KOBE	24-Aug-2007	SHEET 18 OF 63	

MCH_CFG(5)	LOW=DMIx2 HIGH=DMIx4

MCH_CFG(7) (CPU Strap)	LOW=RSVD HIGH=Mobile CPU

MCH_CFG(9) PCIE Graphics Lane	LOW=Reverse Lane HIGH=Normal operation

MCH_CFG(13:12) XOR/ALLZ	00=PARTIAL CLOCK GATING DISABLE 01=XOR MODE ENABLE 10=ALL-Z MODE ENABLE 11=NORMAL OPERATION

MCH_CFG(16) (FSB Dynamic ODT)	LOW=Dynamic ODT Disable HIGH=Dynamic ODT Enable

MCH_CFG(11) PSB 4X CLK ENABLE	LOW=CALISTOGA HIGH=RESERVED

NOTE: CFG[2:0] STRP : 001b : 533 MT/S
011b : 667 MT/S

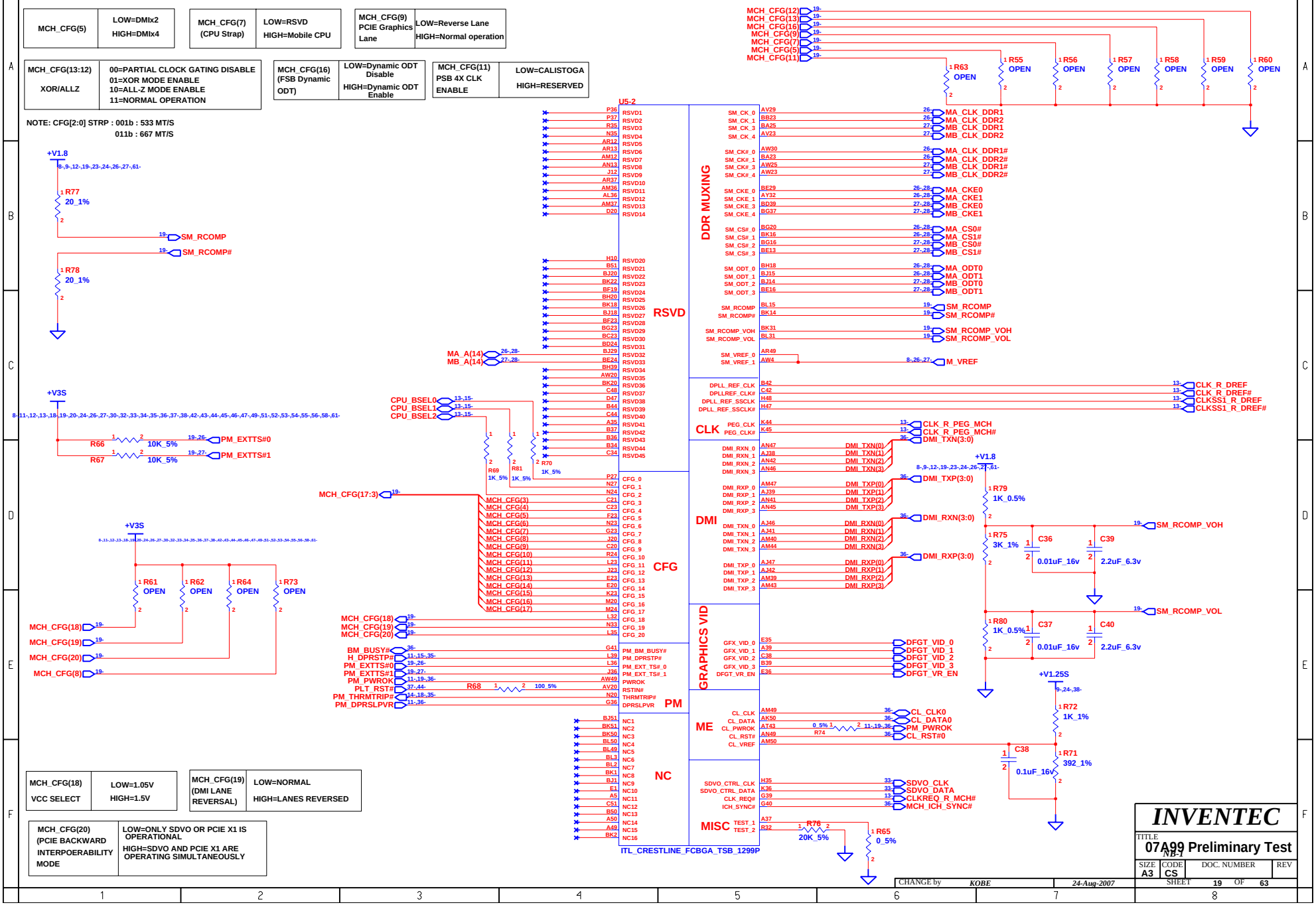

MCH_CFG(18) VCC SELECT	LOW=1.05V HIGH=1.5V

MCH_CFG(19) (DMI LANE REVERSAL)	LOW=NORMAL HIGH=LANES REVERSED

MCH_CFG(20) (PCIE BACKWARD INTERPOERABILITY MODE	LOW=ONLY SDVO OR PCIE X1 IS OPERATIONAL HIGH=SDVO AND PCIE X1 ARE OPERATING SIMULTANEOUSLY

INVENTEC

TITLE: 07A99 Preliminary Test
NB-1

SIZE	CODE	DOC. NUMBER	REV
A3	CS		

SHEET 19 OF 63

CHANGE by KOBE 24-Aug-2007

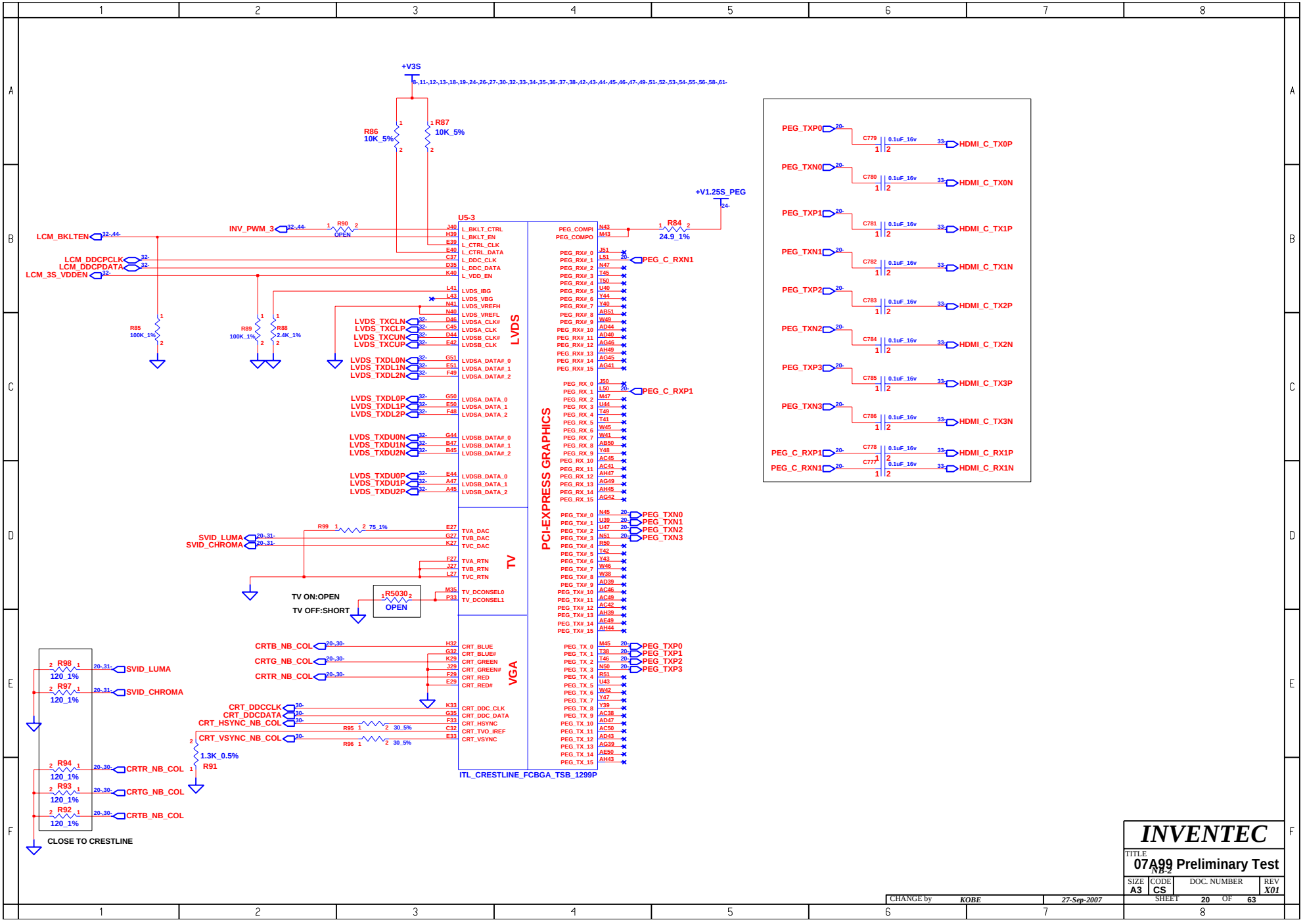

INVENTEC

TITLE: 07A99 Preliminary Test NB-2

SIZE	CODE	DOC. NUMBER	REV
A3	CS		X01

CHANGE by KOBE 27-Sep-2007

SHEET 20 OF 63

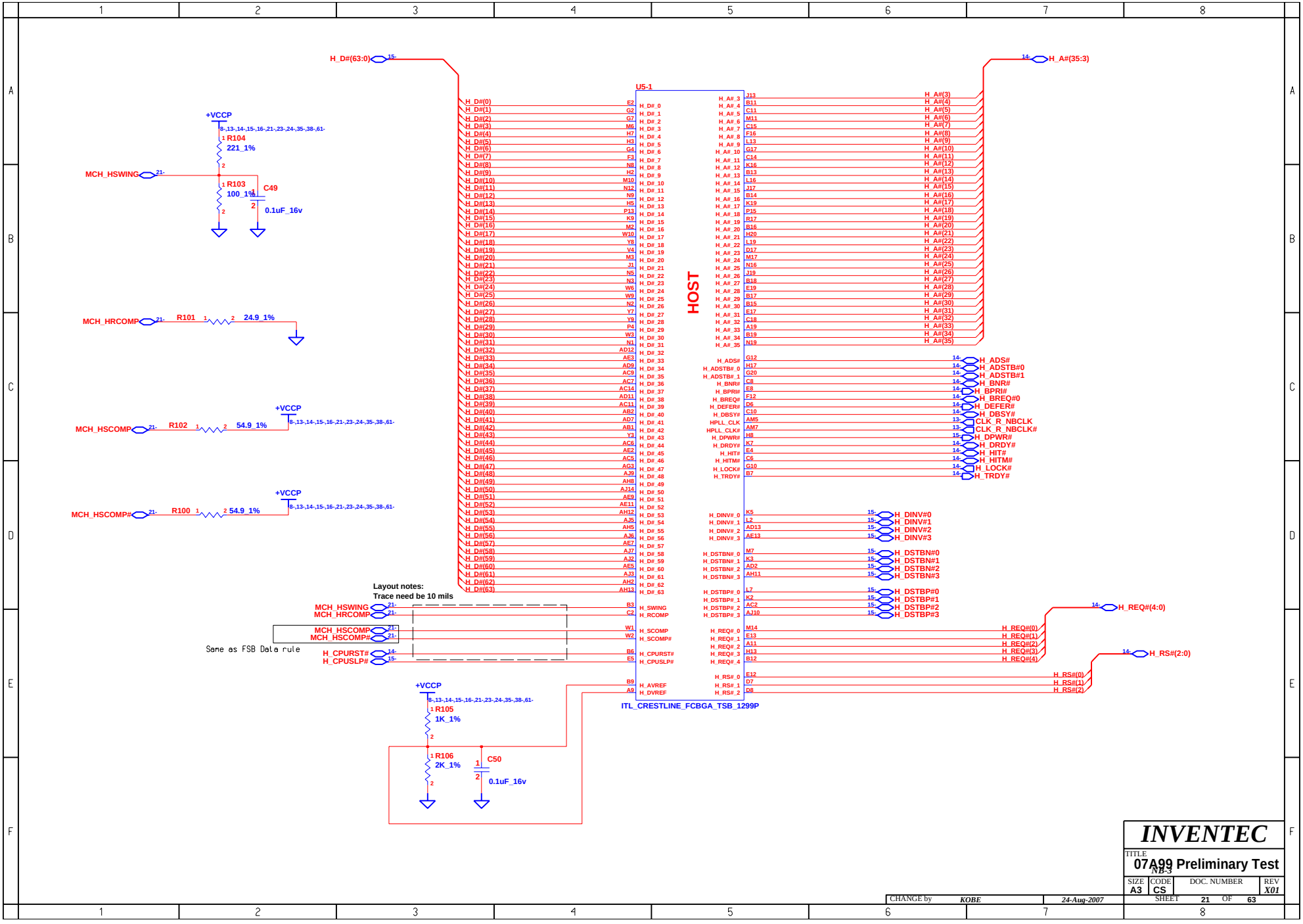
U5-1
HOST
ITL_CRESTLINE_FCBGA_TSB_1299P
H_D#(63:0)
H_A#(35:3)
H_ADS#
H_ADSTB#0
H_ADSTB#1
H_BNR#
H_BPRI#
H_BREQ#0
H_DEFER#
H_DBSY#
CLK_R_NBCLK
CLK_R_NBCLK#
H_DPWR#
H_DRDY#
H_HIT#
H_HITM#
H_LOCK#
H_TRDY#
H_DINV#0
H_DINV#1
H_DINV#2
H_DINV#3
H_DSTBN#0
H_DSTBN#1
H_DSTBN#2
H_DSTBN#3
H_DSTBP#0
H_DSTBP#1
H_DSTBP#2
H_DSTBP#3
H_REQ#(4:0)
H_RS#(2:0)
MCH_HSWING
MCH_HRCOMP
MCH_HSCOMP
MCH_HSCOMP#
H_CPURST#
H_CPUSLP#
+VCCP
R104 221_1%
R103 100_1%
C49 0.1uF_16v
R101 24.9_1%
R102 54.9_1%
R100 54.9_1%
R105 1K_1%
R106 2K_1%
C50 0.1uF_16v
Layout notes:
Trace need be 10 mils
Same as FSB Data rule
INVENTEC
TITLE
07A99 Preliminary Test
NB-3
SIZE A3
CODE CS
DOC. NUMBER
REV X01
CHANGE by KOBE
24-Aug-2007
SHEET 21 OF 63

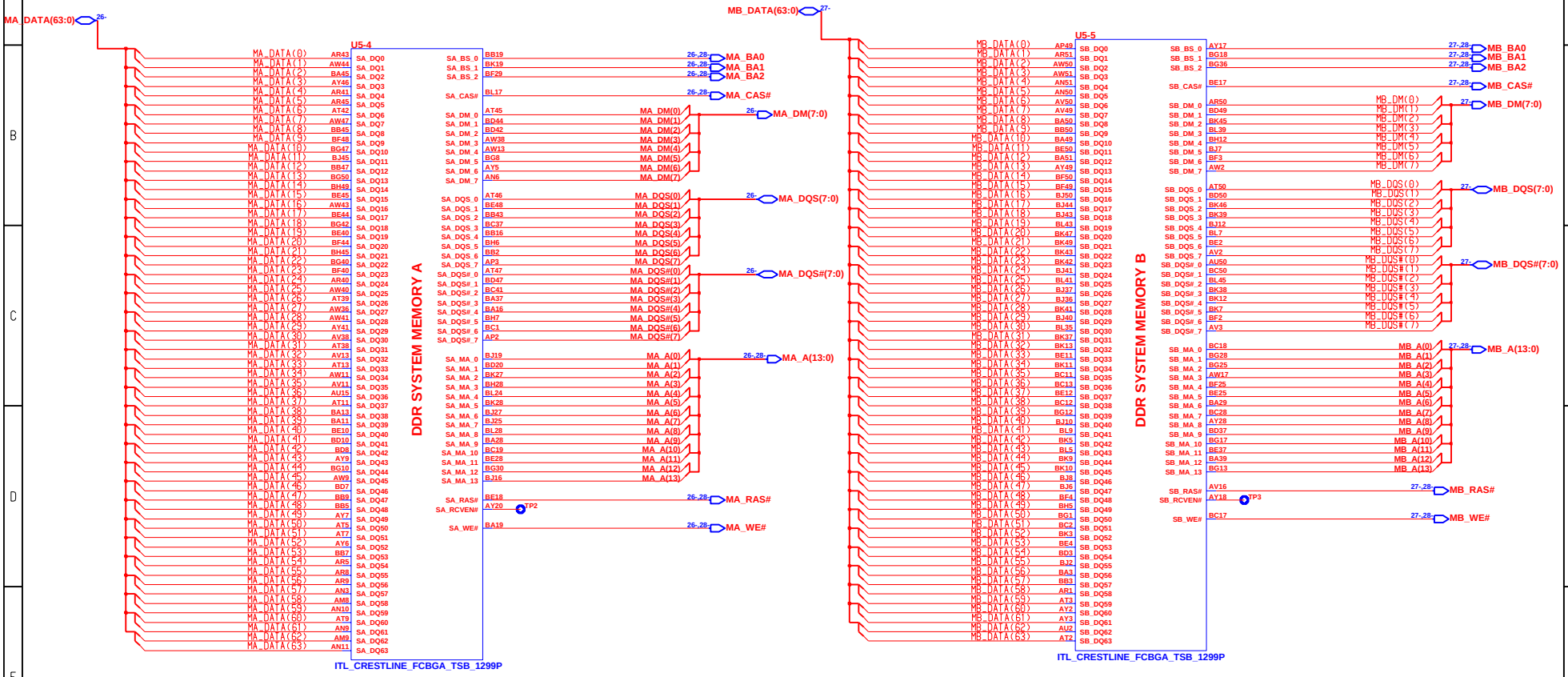

INVENTEC

TITLE: 07A99 Preliminary Test

NB-4

SIZE	CODE	DOC. NUMBER	REV
A3	CS		

SHEET 22 OF 63

CHANGE by KOBE 24-Aug-2007

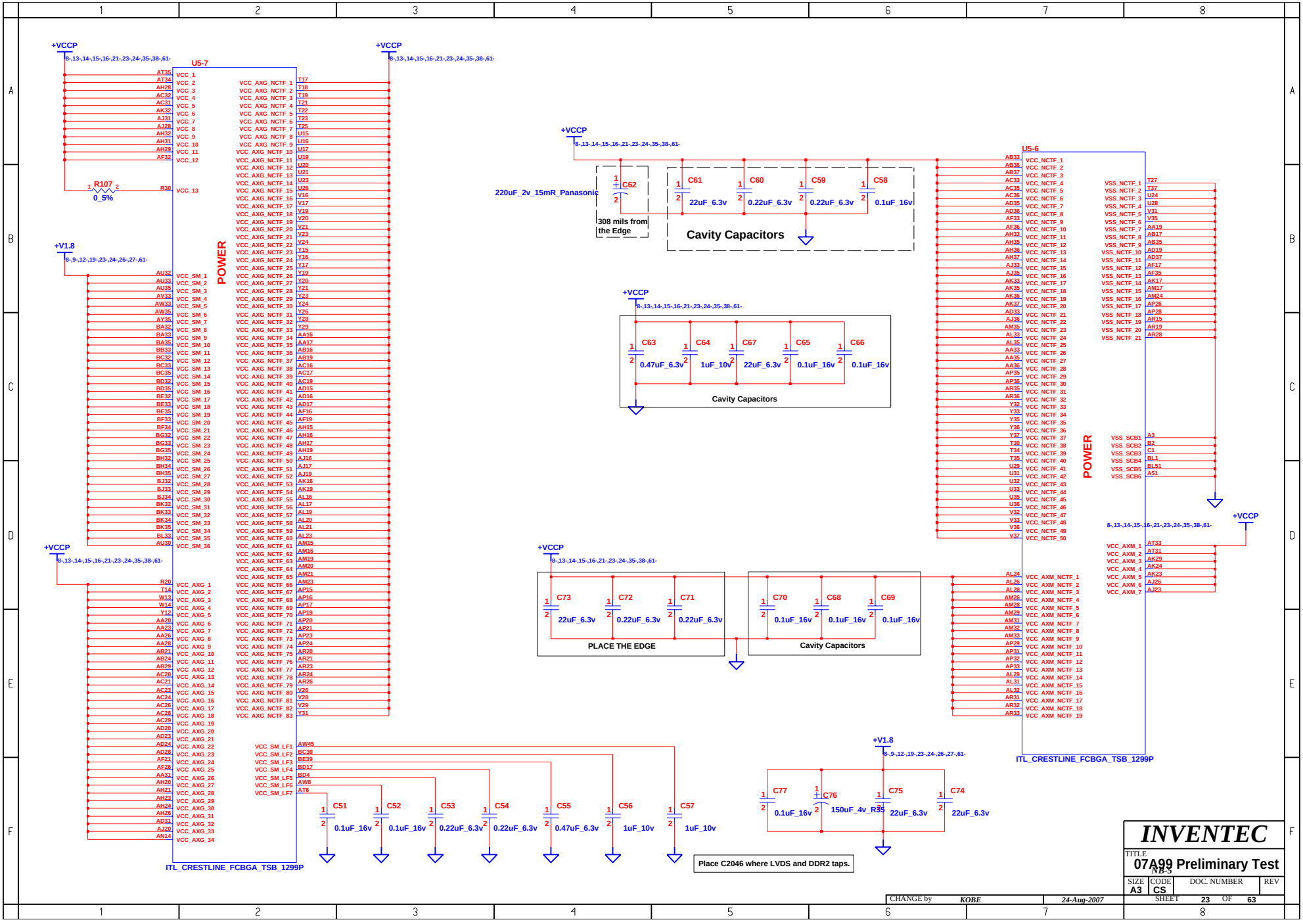

INVENTEC

TITLE
07A99 Preliminary Test
NB-5

SIZE	CODE	DOC. NUMBER	REV
A3	CS		

SHEET 23 OF 63

CHANGE by KOBE 24-Aug-2007

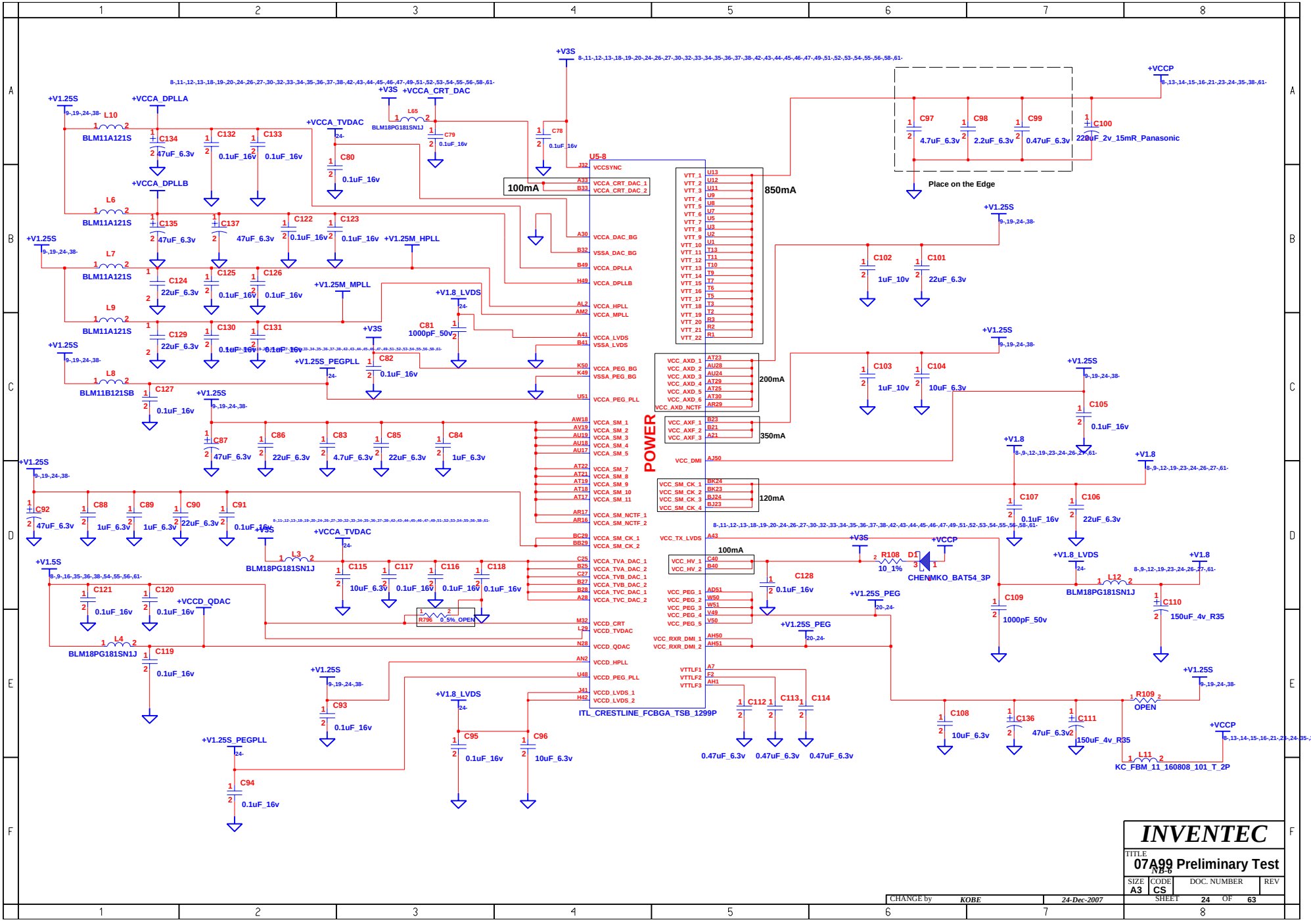
POWER
U5-8
ITL_CRESTLINE_FCBGA_TSB_1299P
100mA
850mA
200mA
350mA
120mA
100mA
Place on the Edge
+V3S
+VCCP
+V1.25S
+VCCA_DPLLA
+VCCA_CRT_DAC
+VCCA_TVDAC
+VCCA_DPLLB
+V1.25M_HPLL
+V1.25M_MPLL
+V1.8_LVDS
+V1.25S_PEGPLL
+V1.8
+V1.5S
+VCCD_QDAC
+V1.25S_PEG
CHENMKO_BAT54_3P
KC_FBM_11_160808_101_T_2P
INVENTEC
TITLE
07A99 Preliminary Test
NB-6
SIZE A3
CODE CS
DOC. NUMBER
REV
SHEET 24 OF 63
CHANGE by KOBE
24-Dec-2007

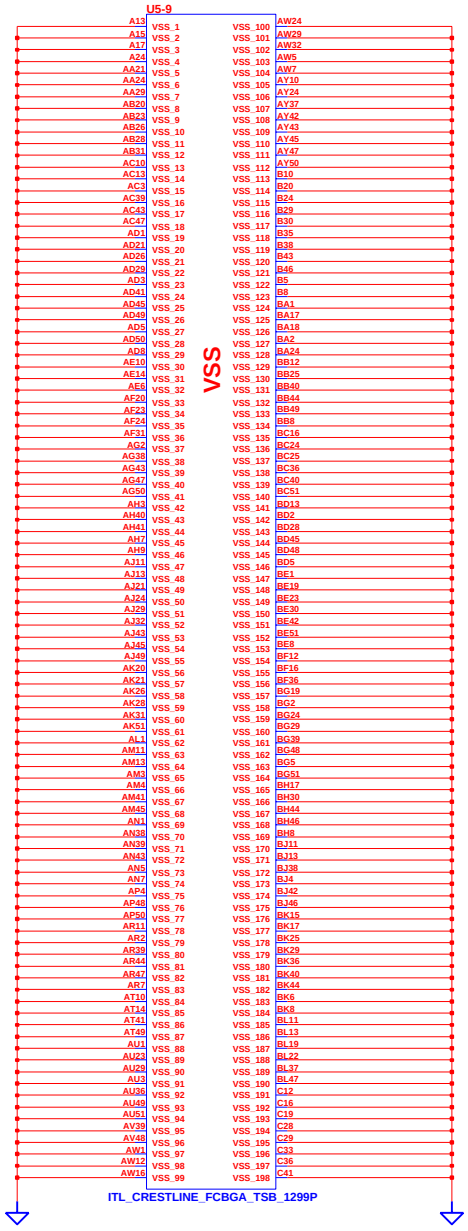

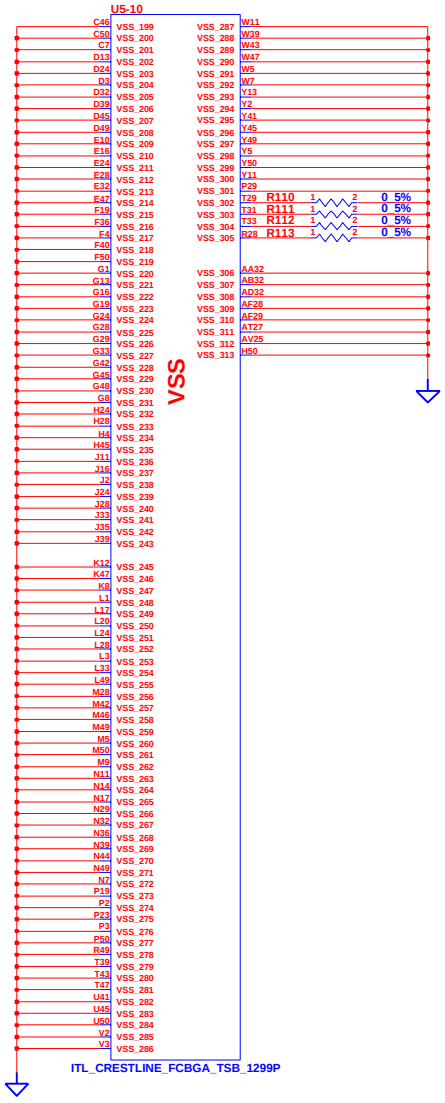

INVENTEC			
TITLE: 07A99 Preliminary Test NB-7			
SIZE A3	CODE CS	DOC. NUMBER	REV X01
CHANGE by KOBE	24-Aug-2007	SHEET 25 OF 63	

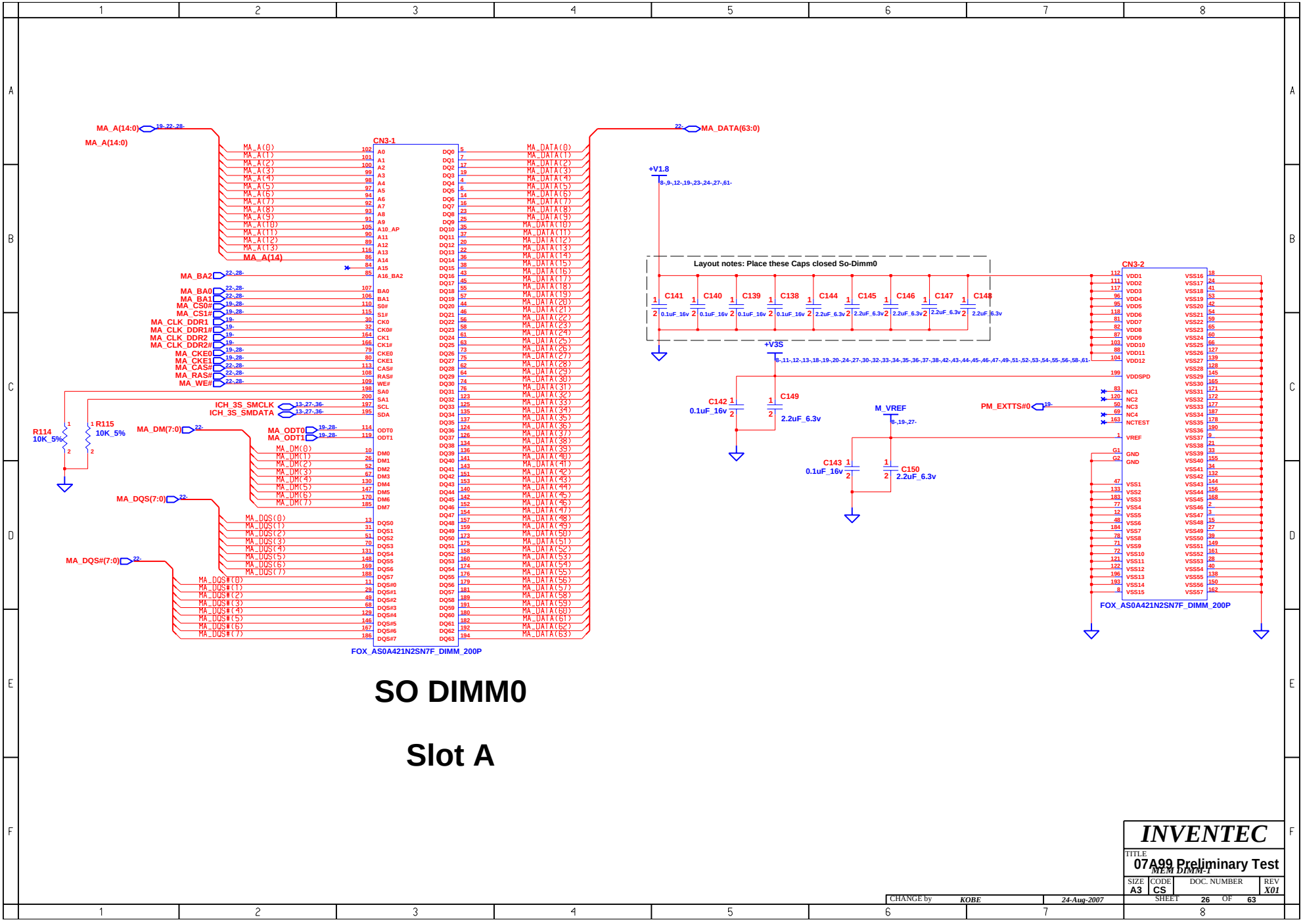

SO DIMM0

Slot A

INVENTEC			
TITLE 07A99 Preliminary Test MEM DIMM-1			
SIZE A3	CODE CS	DOC. NUMBER	REV X01
CHANGE by KOBE	24-Aug-2007	SHEET 26 OF 63	

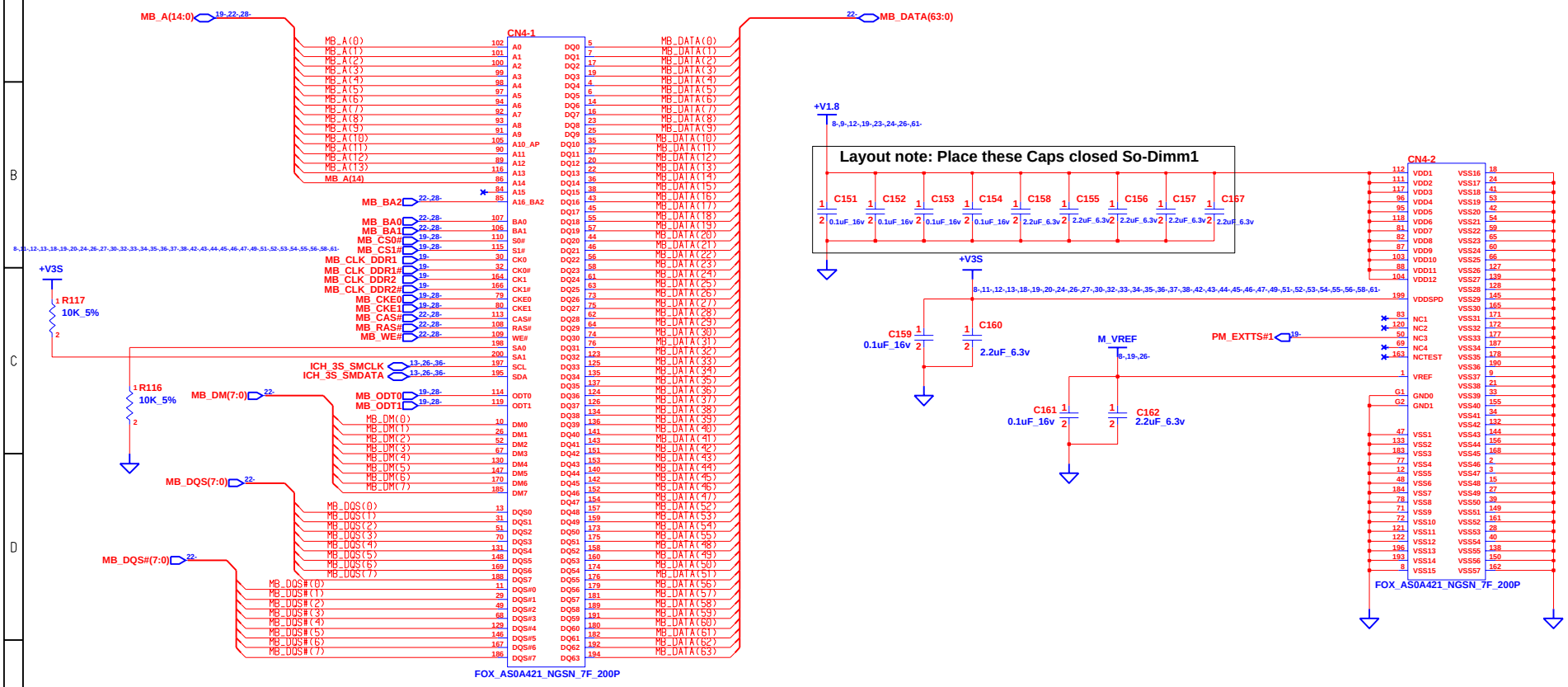

SO DIMM1

Slot B

INVENTEC			
TITLE 07A99 Preliminary Test MEM DIMM-2			
SIZE A3	CODE CS	DOC. NUMBER	REV X01
CHANGE by KOBE	13-Dec-2007	SHEET 27 OF 63	

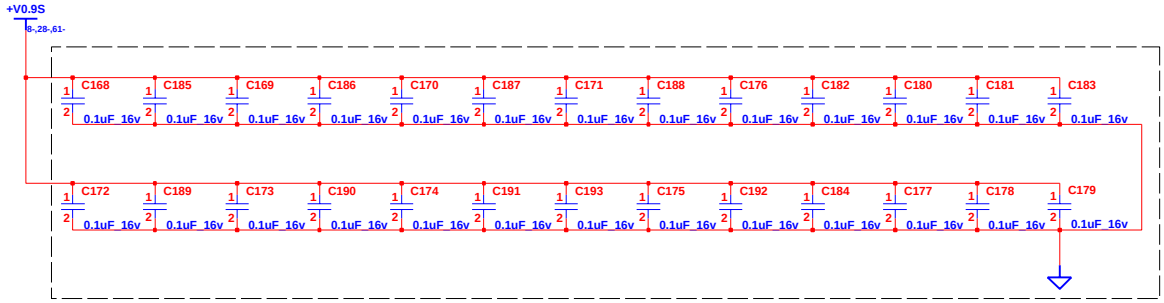

LAYOUT NOTES : PLACE ONE CAP CLOSE TO EVERY 2 PULL UP RESISTOR TERMINATED TO +V0.9S

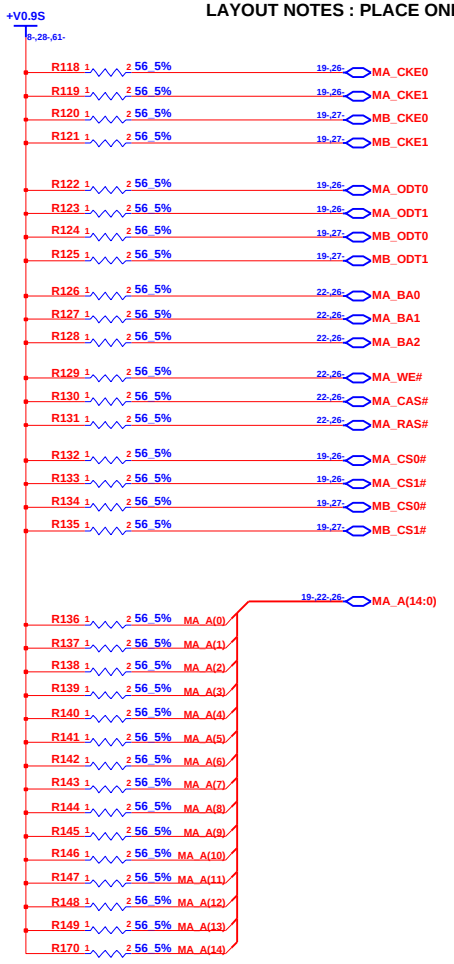

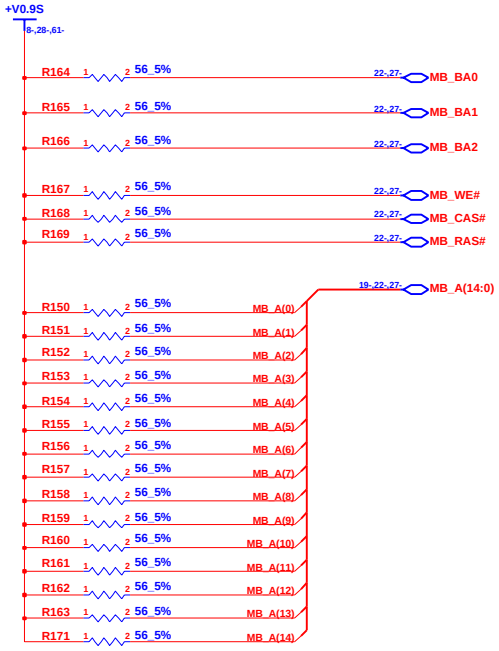

CHANGE by	KOBE	24-Aug-2007	

INVENTEC

TITLE: 07A99 Preliminary Test
MEM DAMPING

SIZE	CODE	DOC. NUMBER	REV
A3	CS		

SHEET 28 OF 63

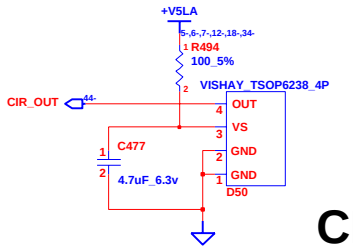

CIR

CHANGE by	KOBE	19-Sep-2007	

INVENTEC

TITLE
07A99 Preliminary Test

SIZE	CODE	DOC. NUMBER	REV
A3	CS		

SHEET 29 OF 63

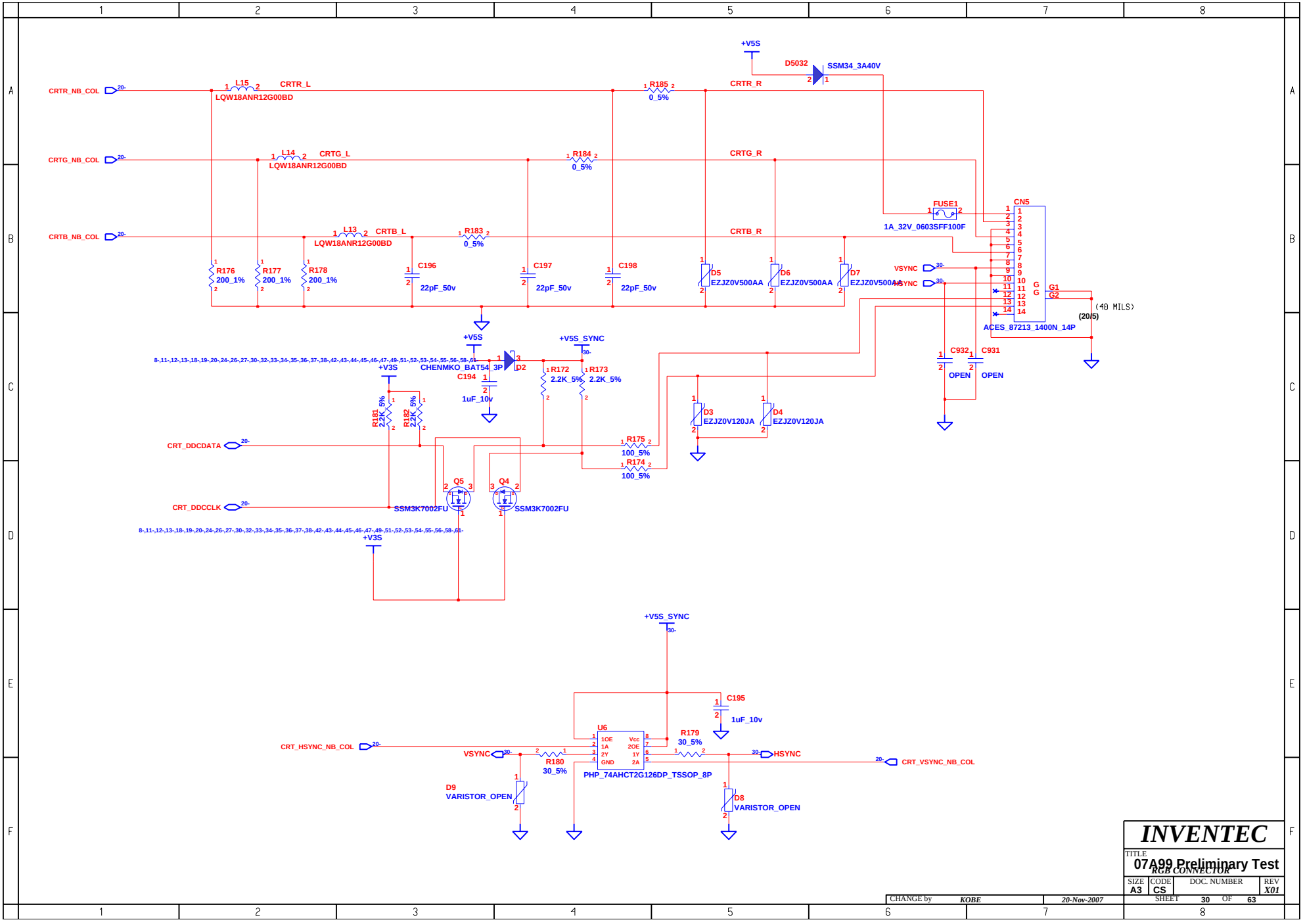
CRTR_NB_COL
CRTG_NB_COL
CRTB_NB_COL
L15
L14
L13
LQW18ANR12G00BD
CRTR_L
CRTG_L
CRTB_L
R185
R184
R183
0_5%
CRTR_R
CRTG_R
CRTB_R
+V5S
D5032
SSM34_3A40V
FUSE1
1A_32V_0603SFF100F
CN5
ACES_87213_1400N_14P
VSYNC
HSYNC
G1
G2
(40 MILS)
(20/5)
R176
R177
R178
200_1%
C196
C197
C198
22pF_50v
D5
D6
D7
EZJZ0V500AA
C932
C931
OPEN
+V5S_SYNC
CHENMKO_BAT54_3P
D2
C194
1uF_10v
R172
R173
2.2K_5%
R181
R182
+V3S
D3
D4
EZJZ0V120JA
CRT_DDCDATA
CRT_DDCCLK
R175
R174
100_5%
Q5
Q4
SSM3K7002FU
C195
U6
PHP_74AHCT2G126DP_TSSOP_8P
R179
30_5%
R180
CRT_HSYNC_NB_COL
CRT_VSYNC_NB_COL
D9
VARISTOR_OPEN
D8
VARISTOR_OPEN
INVENTEC
TITLE
07A99 Preliminary Test
RGB CONNECTOR
SIZE A3
CODE CS
DOC. NUMBER
REV X01
CHANGE by KOBE
20-Nov-2007
SHEET 30 OF 63

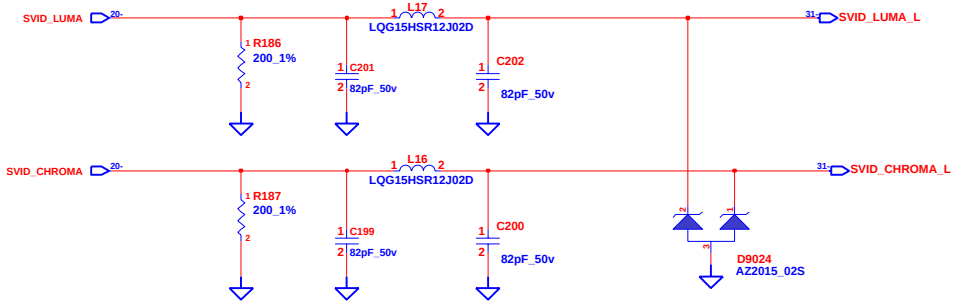

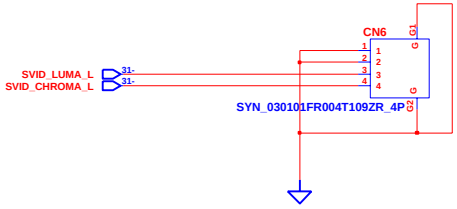

SVIDEO CN

CHANGE by	KOBE	14-Sep-2007	

INVENTEC

TITLE
07A99 Preliminary Test
S-VIDEO CONN

SIZE	CODE	DOC. NUMBER	REV
A3	CS		X01

SHEET 31 OF 63

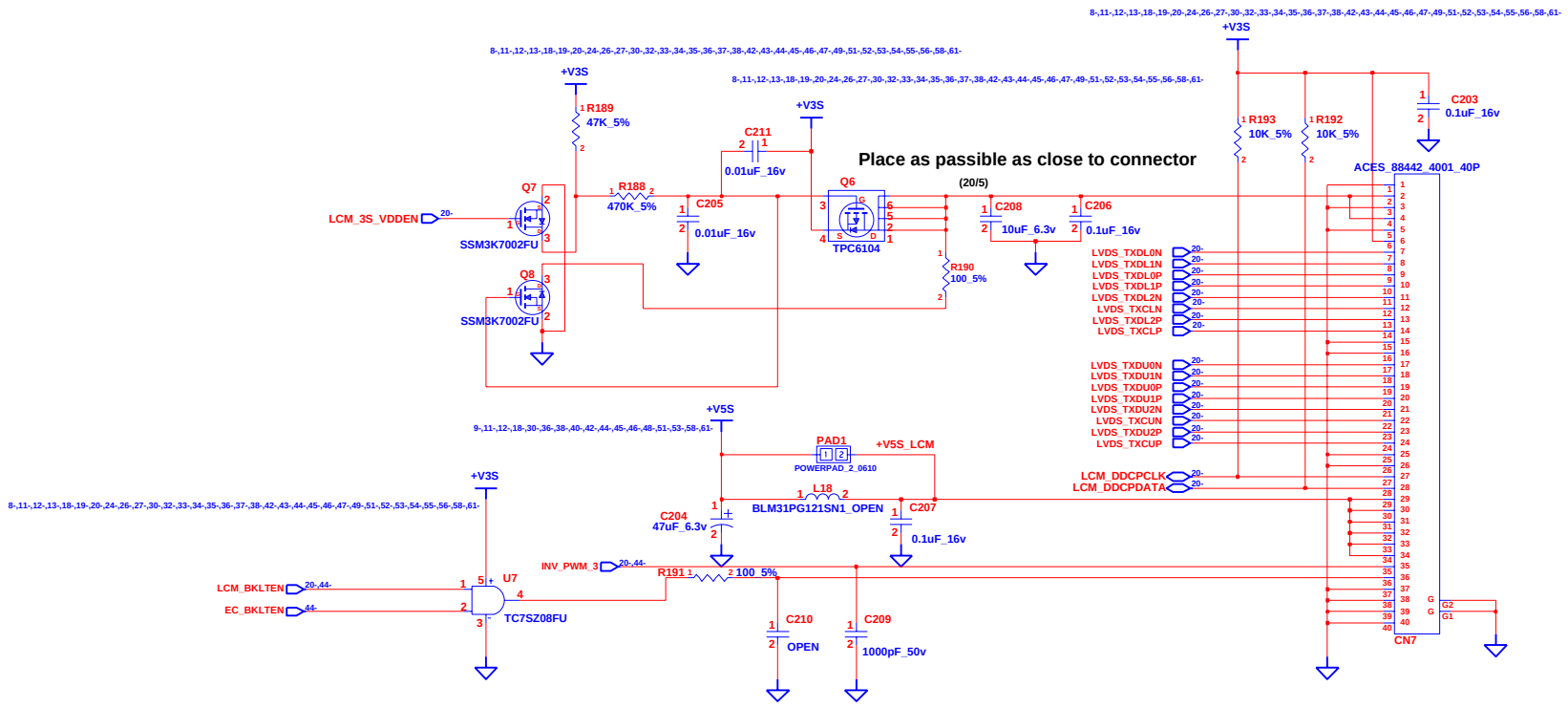

INVENTEC			
TITLE 07A99 Preliminary Test LCM			
SIZE A3	CODE CS	DOC. NUMBER	REV X01
CHANGE by KOBE	19-Nov-2007	SHEET 32 OF 63	

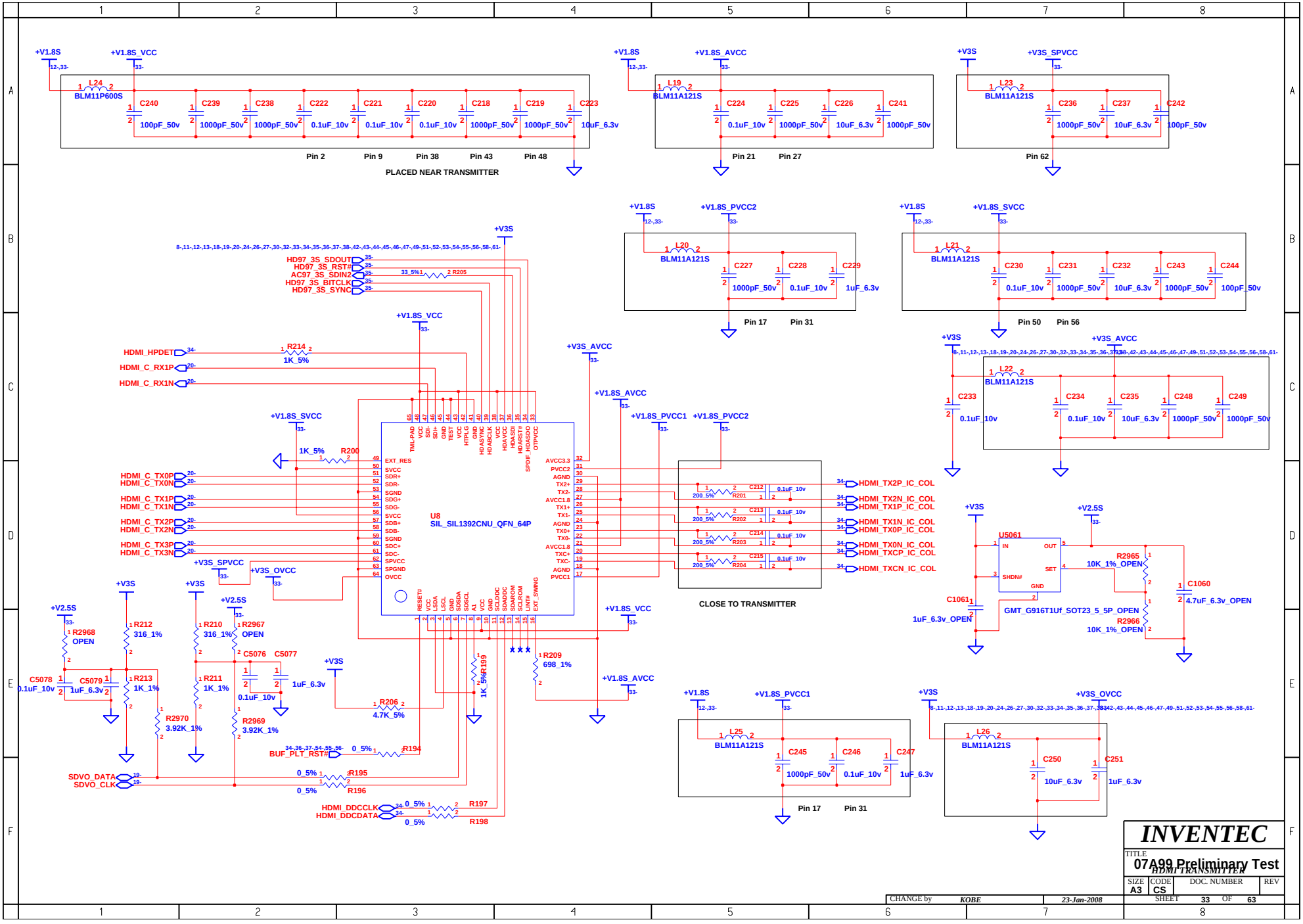
+V1.8S
+V1.8S_VCC
L24
BLM11P600S
C240 100pF_50v
C239 1000pF_50v
C238 1000pF_50v
C222 0.1uF_10v
C221 0.1uF_10v
C220 0.1uF_10v
C218 1000pF_50v
C219 1000pF_50v
C223 10uF_6.3v
Pin 2
Pin 9
Pin 38
Pin 43
Pin 48
PLACED NEAR TRANSMITTER
+V1.8S_AVCC
L19
BLM11A121S
C224 0.1uF_10v
C225 1000pF_50v
C226 10uF_6.3v
C241 1000pF_50v
Pin 21
Pin 27
+V3S
+V3S_SPVCC
L23
BLM11A121S
C236 1000pF_50v
C237 10uF_6.3v
C242 100pF_50v
Pin 62
+V1.8S_PVCC2
L20
BLM11A121S
C227 1000pF_50v
C228 0.1uF_10v
C229 1uF_6.3v
Pin 17
Pin 31
+V1.8S_SVCC
L21
BLM11A121S
C230 0.1uF_10v
C231 1000pF_50v
C232 10uF_6.3v
C243 1000pF_50v
C244 100pF_50v
Pin 50
Pin 56
+V3S_AVCC
L22
BLM11A121S
C233 0.1uF_10v
C234 0.1uF_10v
C235 10uF_6.3v
C248 1000pF_50v
C249 1000pF_50v
HD97_3S_SDOUT
HD97_3S_RST#
AC97_3S_SDIN2
HD97_3S_BITCLK
HD97_3S_SYNC
R205 33_5%
HDMI_HPDET
R214 1K_5%
HDMI_C_RX1P
HDMI_C_RX1N
R200 1K_5%
HDMI_C_TX0P
HDMI_C_TX0N
HDMI_C_TX1P
HDMI_C_TX1N
HDMI_C_TX2P
HDMI_C_TX2N
HDMI_C_TX3P
HDMI_C_TX3N
+V3S_SPVCC
+V3S_OVCC
U8
SIL_SIL1392CNU_QFN_64P
EXT_RES
SVCC
SDR+
SDR-
SGND
SDG+
SDG-
SVCC
SDB+
SDB-
SGND
SDC+
SDC-
SPVCC
SPGND
OVCC
AVCC3.3
PVCC2
AGND
TX2+
TX2-
AVCC1.8
TX1+
TX1-
AGND
TX0+
TX0-
AVCC1.8
TXC+
TXC-
AGND
PVCC1
RESET#
VCC
SDA
LSCL
GND
SDSDA
SDSCL
AL
VCC
GND
SCLDDC
SDADDC
SDAROM
SCLROM
UVP
EXT_SWING
R201 200_5% C212 0.1uF_10v
R202 200_5% C213 0.1uF_10v
R203 200_5% C214 0.1uF_10v
R204 200_5% C215 0.1uF_10v
HDMI_TX2P_IC_COL
HDMI_TX2N_IC_COL
HDMI_TX1P_IC_COL
HDMI_TX1N_IC_COL
HDMI_TX0P_IC_COL
HDMI_TX0N_IC_COL
HDMI_TXCP_IC_COL
HDMI_TXCN_IC_COL
CLOSE TO TRANSMITTER
+V2.5S
U5061
IN
OUT
SHDN#
SET
GND
GMT_G916T1Uf_SOT23_5_5P_OPEN
C1061 1uF_6.3v_OPEN
R2965 10K_1%_OPEN
R2966 10K_1%_OPEN
C1060 4.7uF_6.3v_OPEN
R2968 OPEN
R212 316_1%
R210 316_1%
R2967 OPEN
C5076
C5077
C5078 0.1uF_10v
C5079 1uF_6.3v
R213 1K_1%
R211 1K_1%
0.1uF_10v
1uF_6.3v
R2970 3.92K_1%
R2969 3.92K_1%
R206 4.7K_5%
R199 1K_5%
R209 698_1%
BUF_PLT_RST#
R194 0_5%
SDVO_DATA
SDVO_CLK
R195 0_5%
R196 0_5%
HDMI_DDCCLK
HDMI_DDCDATA
R197 0_5%
R198 0_5%
L25
BLM11A121S
C245 1000pF_50v
C246 0.1uF_10v
C247 1uF_6.3v
Pin 17
Pin 31
L26
BLM11A121S
C250 10uF_6.3v
C251 1uF_6.3v
INVENTEC
TITLE
07A99 Preliminary Test
HDMI TRANSMITTER
SIZE A3
CODE CS
DOC. NUMBER
REV
SHEET 33 OF 63
CHANGE by KOBE
23-Jan-2008

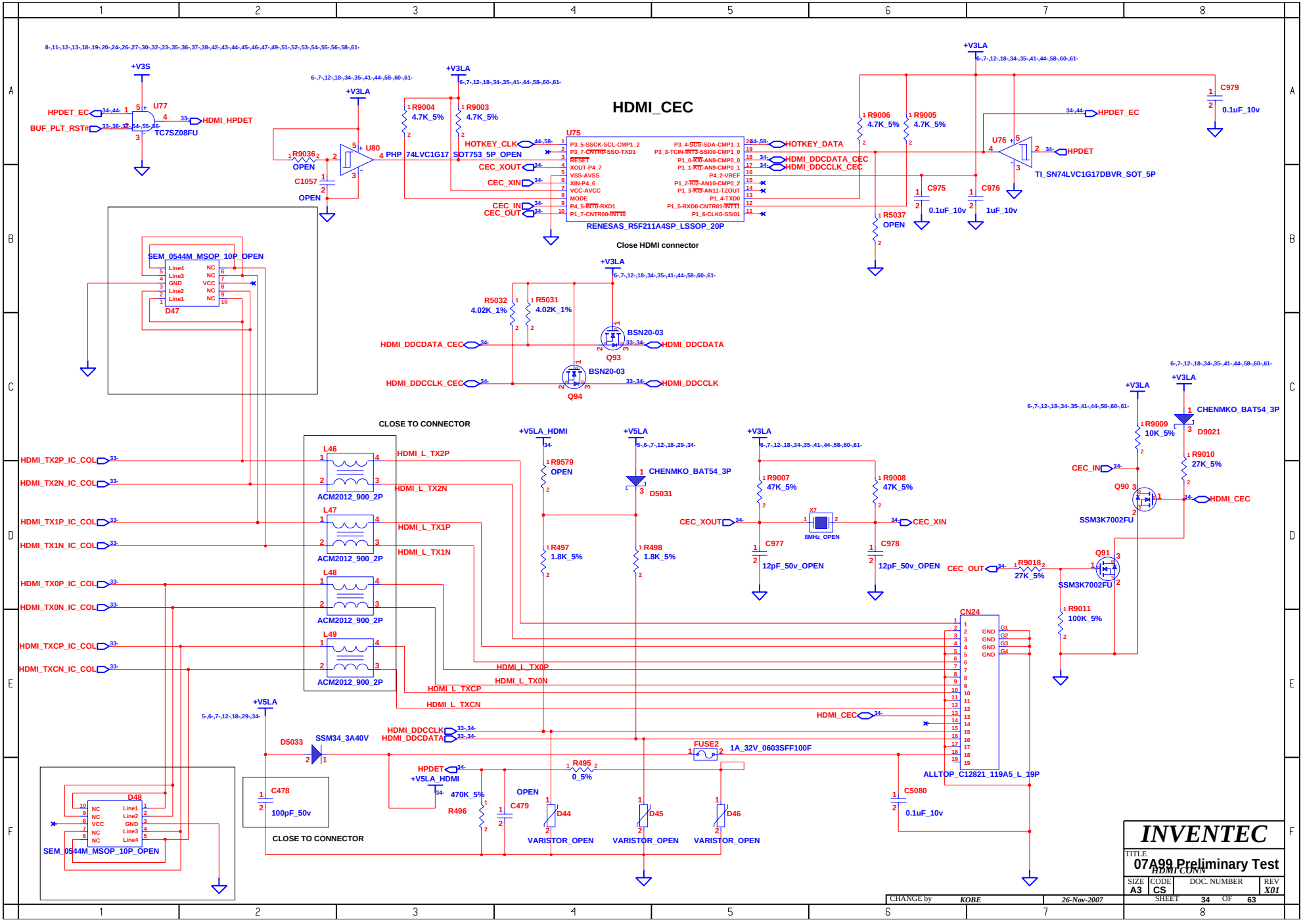
HDMI_CEC
U75
RENESAS_R5F211A4SP_LSSOP_20P
U77
TC7SZ08FU
HPDET_EC
BUF_PLT_RST#
HDMI_HPDET
U80
PHP_74LVC1G17_SOT753_5P_OPEN
R9036
OPEN
C1057
OPEN
R9004
4.7K_5%
R9003
4.7K_5%
HOTKEY_CLK
CEC_XOUT
CEC_XIN
CEC_IN
CEC_OUT
HOTKEY_DATA
HDMI_DDCDATA_CEC
HDMI_DDCCLK_CEC
R9006
4.7K_5%
R9005
4.7K_5%
R5037
OPEN
C975
0.1uF_10v
C976
1uF_10v
U76
TI_SN74LVC1G17DBVR_SOT_5P
HPDET
C979
0.1uF_10v
Close HDMI connector
R5032
4.02K_1%
R5031
4.02K_1%
BSN20-03
Q93
Q94
HDMI_DDCDATA
HDMI_DDCCLK
SEM_0544M_MSOP_10P_OPEN
D47
CLOSE TO CONNECTOR
L46
L47
L48
L49
ACM2012_900_2P
HDMI_TX2P_IC_COL
HDMI_TX2N_IC_COL
HDMI_TX1P_IC_COL
HDMI_TX1N_IC_COL
HDMI_TX0P_IC_COL
HDMI_TX0N_IC_COL
HDMI_TXCP_IC_COL
HDMI_TXCN_IC_COL
HDMI_L_TX2P
HDMI_L_TX2N
HDMI_L_TX1P
HDMI_L_TX1N
HDMI_L_TX0P
HDMI_L_TX0N
HDMI_L_TXCP
HDMI_L_TXCN
R9579
OPEN
R497
1.8K_5%
R498
1.8K_5%
CHENMKO_BAT54_3P
D5031
R9007
47K_5%
R9008
47K_5%
X7
8MHz_OPEN
C977
12pF_50v_OPEN
C978
12pF_50v_OPEN
R9018
27K_5%
Q91
SSM3K7002FU
R9011
100K_5%
R9009
10K_5%
R9010
27K_5%
D9021
Q90
HDMI_CEC
CN24
ALLTOP_C12821_119A5_L_19P
D5033
SSM34_3A40V
FUSE2
1A_32V_0603SFF100F
R495
0_5%
C5080
0.1uF_10v
HPDET
HDMI_DDCCLK
HDMI_DDCDATA
R496
470K_5%
C479
OPEN
D44
D45
D46
VARISTOR_OPEN
C478
100pF_50v
CLOSE TO CONNECTOR
D48
SEM_0544M_MSOP_10P_OPEN
INVENTEC
TITLE
07A99 Preliminary Test
HDMI CONN
SIZE A3
CODE CS
DOC. NUMBER
REV X01
SHEET 34 OF 63
CHANGE by KOBE
26-Nov-2007

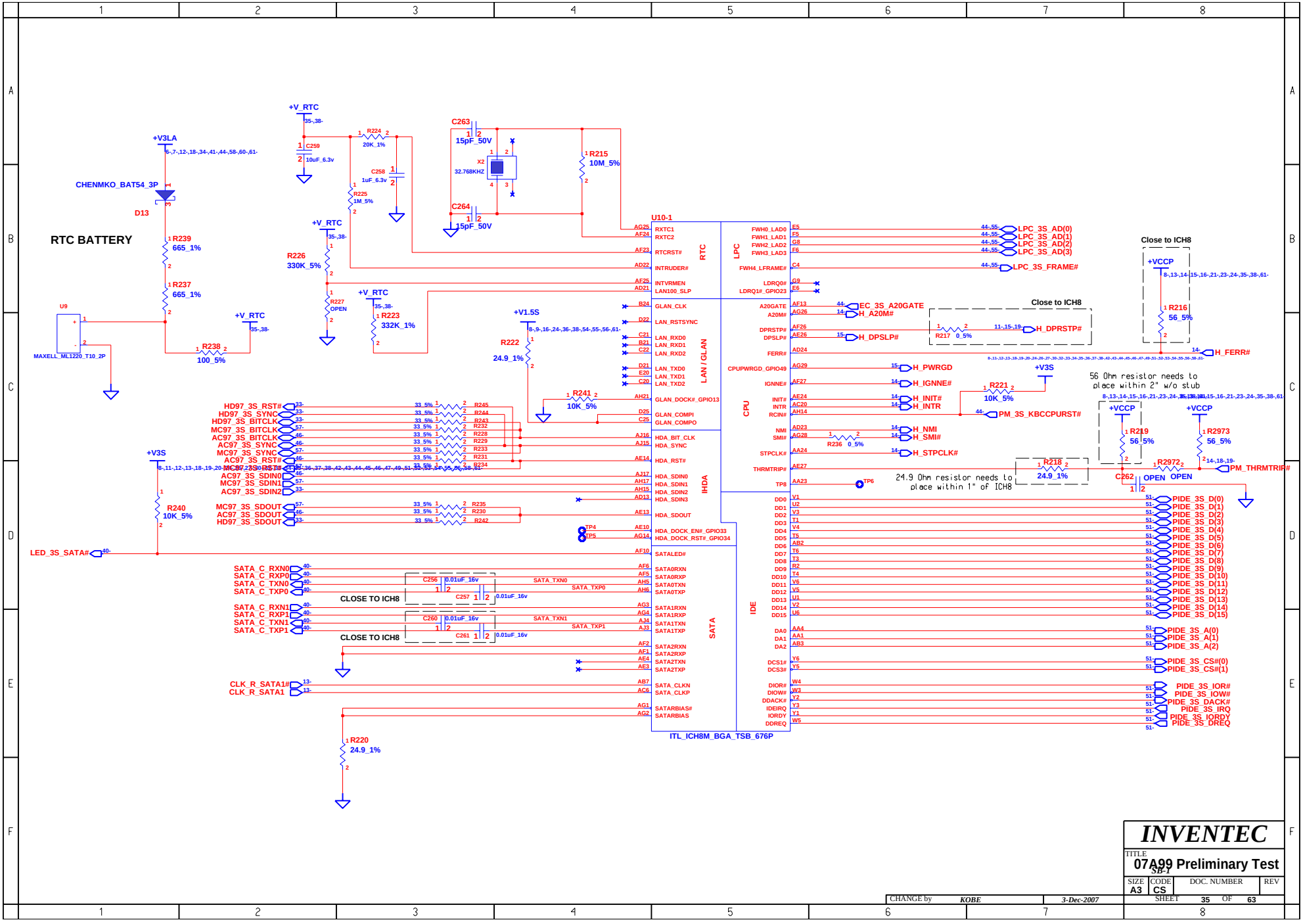

INVENTEC

TITLE 07A99 Preliminary Test SB-1

SIZE	CODE	DOC. NUMBER	REV
A3	CS		

CHANGE by KOBE 3-Dec-2007 SHEET 35 OF 63

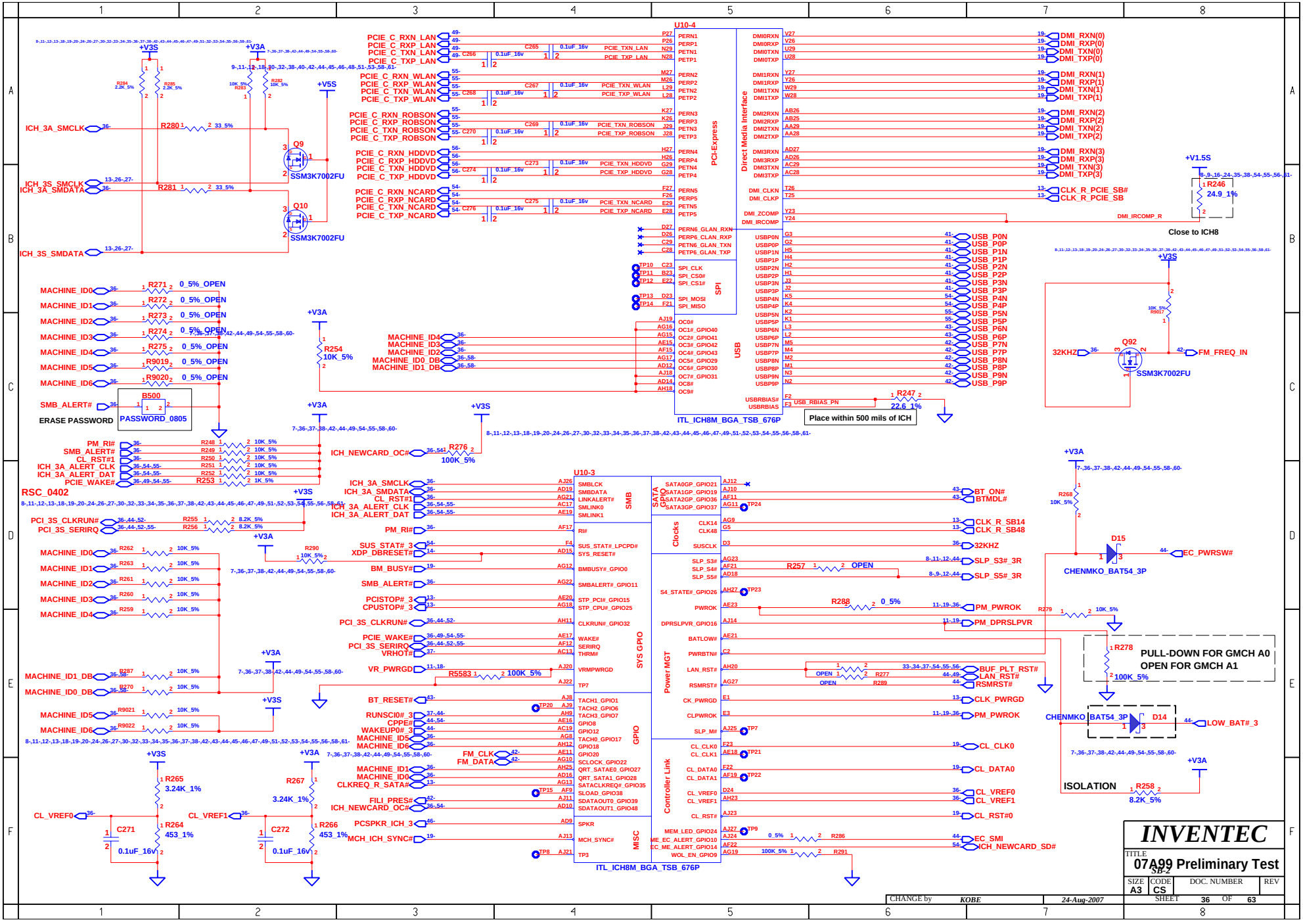
U10-4
PCI-Express
Direct Media Interface
SPI
USB
ITL_ICH8M_BGA_TSB_676P
Place within 500 mils of ICH
Close to ICH8
U10-3
SMB
SATA GPIO
Clocks
Power MGT
SYS GPIO
GPIO
Controller Link
MISC
ITL_ICH8M_BGA_TSB_676P
PULL-DOWN FOR GMCH A0
OPEN FOR GMCH A1
ISOLATION
ERASE PASSWORD
PASSWORD_0805
RSC_0402
CHENMKO_BAT54_3P
SSM3K7002FU
INVENTEC
07A99 Preliminary Test
SB-2
SIZE A3
CODE CS
DOC. NUMBER
REV
SHEET 36 OF 63
CHANGE by KOBE
24-Aug-2007

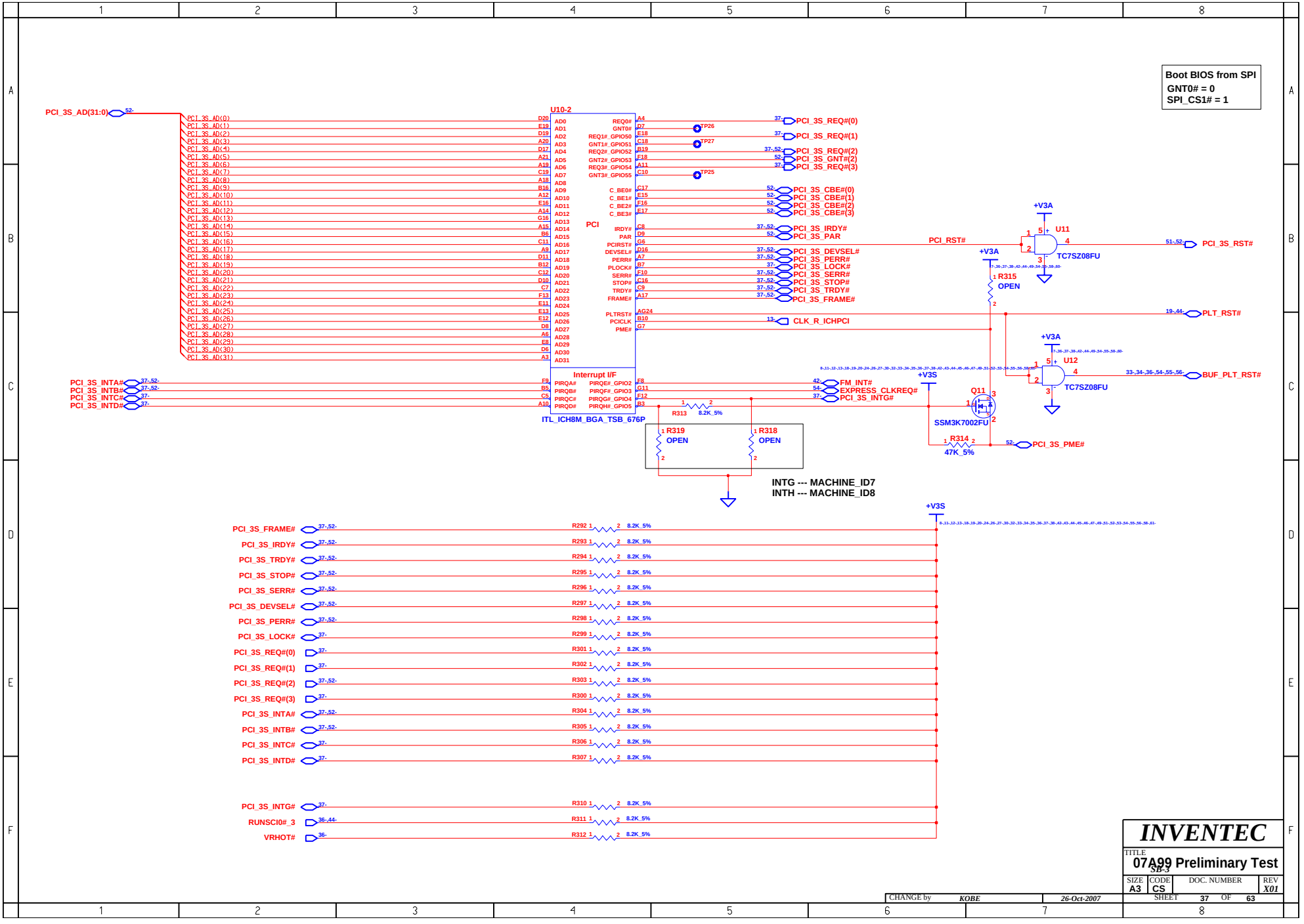
Boot BIOS from SPI
GNT0# = 0
SPI_CS1# = 1
PCI_3S_AD(31:0)
U10-2
PCI
Interrupt I/F
ITL_ICH8M_BGA_TSB_676P
PCI_3S_REQ#(0)
PCI_3S_REQ#(1)
PCI_3S_REQ#(2)
PCI_3S_GNT#(2)
PCI_3S_REQ#(3)
PCI_3S_CBE#(0)
PCI_3S_CBE#(1)
PCI_3S_CBE#(2)
PCI_3S_CBE#(3)
PCI_3S_IRDY#
PCI_3S_PAR
PCI_3S_DEVSEL#
PCI_3S_PERR#
PCI_3S_LOCK#
PCI_3S_SERR#
PCI_3S_STOP#
PCI_3S_TRDY#
PCI_3S_FRAME#
CLK_R_ICHPCI
PCI_3S_INTA#
PCI_3S_INTB#
PCI_3S_INTC#
PCI_3S_INTD#
FM_INT#
EXPRESS_CLKREQ#
PCI_3S_INTG#
PCI_RST#
PCI_3S_RST#
PLT_RST#
BUF_PLT_RST#
PCI_3S_PME#
U11
TC7SZ08FU
U12
TC7SZ08FU
Q11
SSM3K7002FU
R315 OPEN
R314 47K_5%
R313 8.2K_5%
R319 OPEN
R318 OPEN
INTG --- MACHINE_ID7
INTH --- MACHINE_ID8
+V3A
+V3S
RUNSCI0#_3
VRHOT#
INVENTEC
TITLE
07A99 Preliminary Test
SB-3
SIZE A3
CODE CS
DOC. NUMBER
REV X01
SHEET 37 OF 63
CHANGE by KOBE
26-Oct-2007

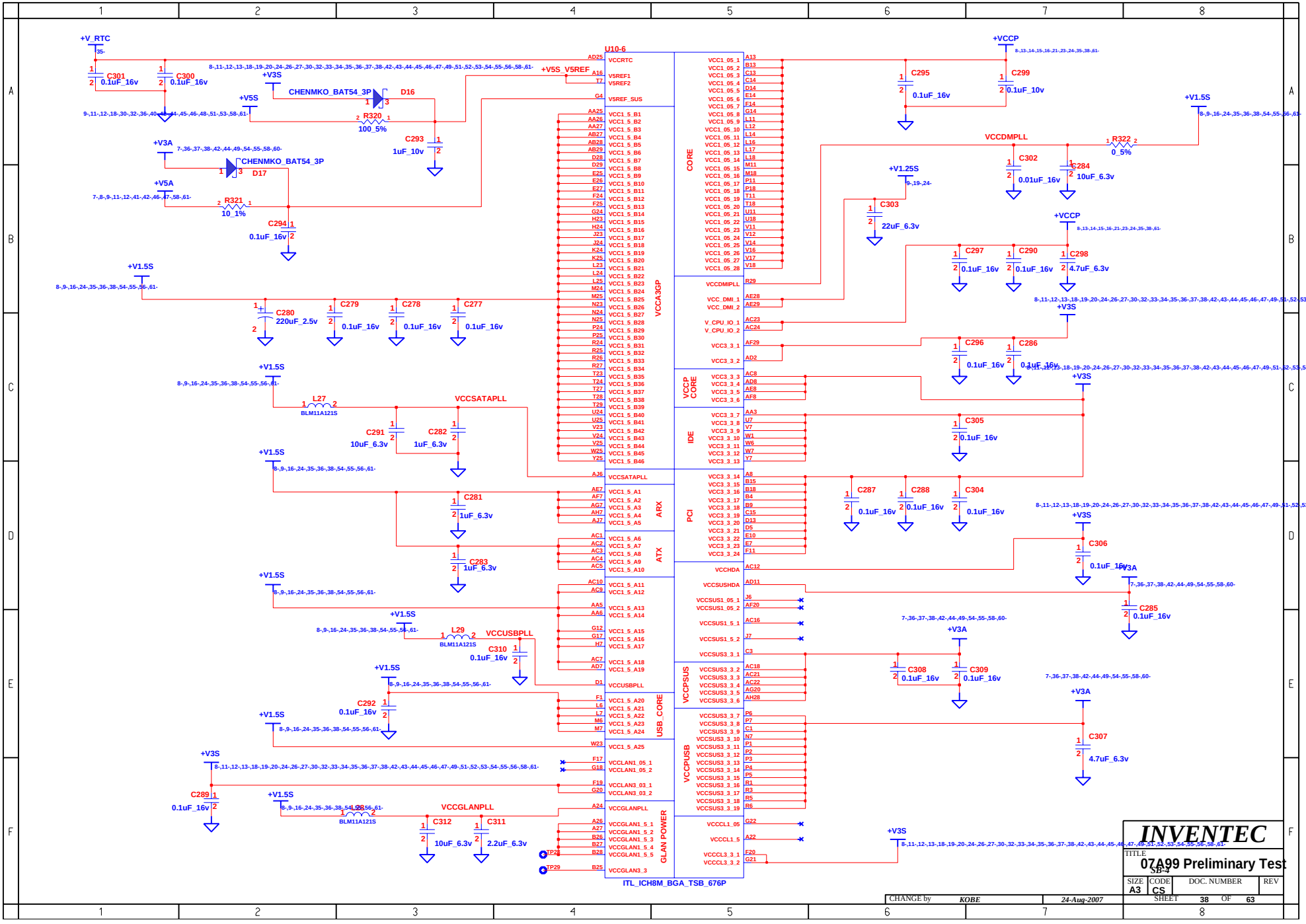
U10-6
ITL_ICH8M_BGA_TSB_676P
CORE
VCCA3GP
VCCP CORE
IDE
PCI
ARX
ATX
USB_CORE
VCCPSUS
VCCPUSB
GLAN POWER
+V_RTC
C301 0.1uF_16v
C300 0.1uF_16v
+V3S
CHENMKO_BAT54_3P
D16
+V5S
R320 100_5%
C293 1uF_10v
+V3A
CHENMKO_BAT54_3P
D17
+V5A
R321 10_1%
C294 0.1uF_16v
+V5S V5REF
+V1.5S
C280 220uF_2.5v
C279 0.1uF_16v
C278 0.1uF_16v
C277 0.1uF_16v
L27 BLM11A121S
VCCSATAPLL
C291 10uF_6.3v
C282 1uF_6.3v
C281 1uF_6.3v
C283 1uF_6.3v
L29 BLM11A121S
VCCUSBPLL
C310 0.1uF_16v
C292 0.1uF_16v
C289 0.1uF_16v
L28 BLM11A121S
VCCGLANPLL
C312 10uF_6.3v
C311 2.2uF_6.3v
TP28
TP29
+VCCP
C295 0.1uF_16v
C299 0.1uF_10v
VCCDMPLL
R322 0_5%
C302 0.01uF_16v
C284 10uF_6.3v
+V1.25S
C303 22uF_6.3v
C297 0.1uF_16v
C290 0.1uF_16v
C298 4.7uF_6.3v
C296 0.1uF_16v
C286 0.1uF_16v
C305 0.1uF_16v
C287 0.1uF_16v
C288 0.1uF_16v
C304 0.1uF_16v
C306 0.1uF_16v
C285 0.1uF_16v
C308 0.1uF_16v
C309 0.1uF_16v
C307 4.7uF_6.3v
INVENTEC
TITLE
07A99 Preliminary Test
SIZE A3
CODE CS
DOC. NUMBER
REV
SHEET 38 OF 63
CHANGE by KOBE
24-Aug-2007

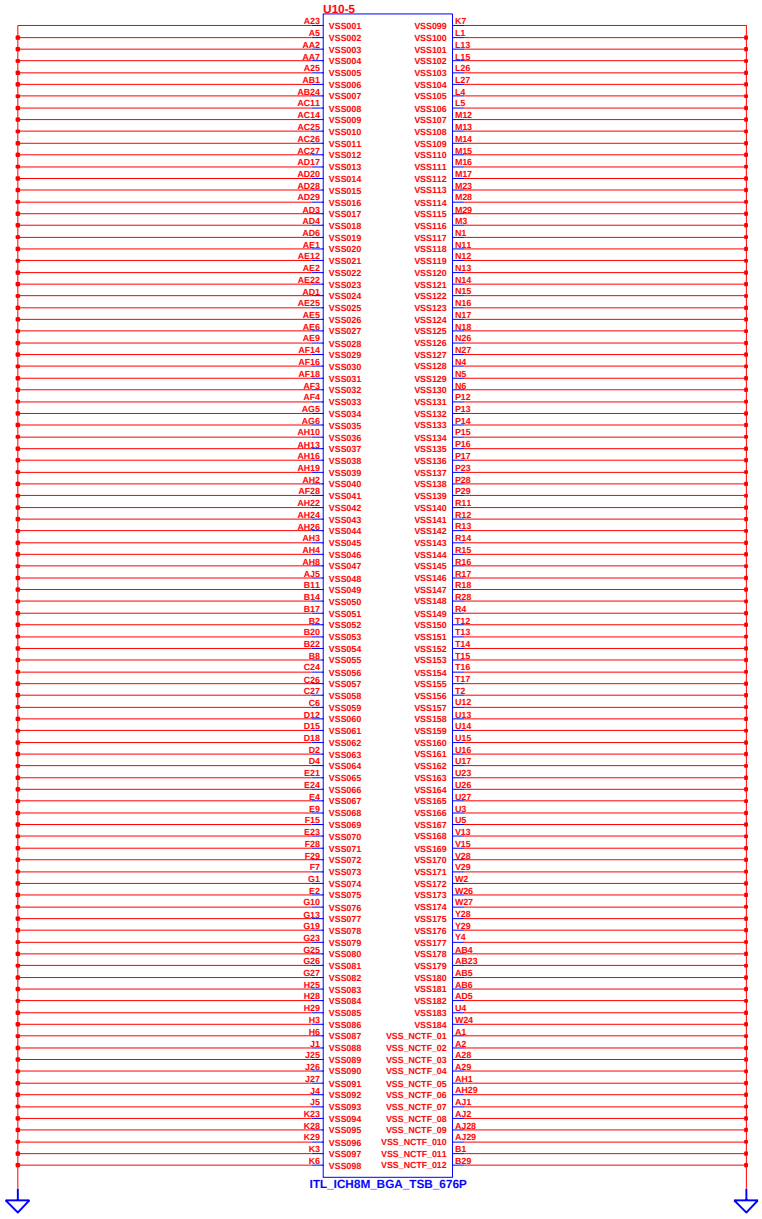

CHANGE by	KOBE	24-Aug-2007	

INVENTEC

TITLE
07A99 Preliminary Test
SB-5

SIZE	CODE	DOC. NUMBER	REV
A3	CS		X01

SHEET 39 OF 63

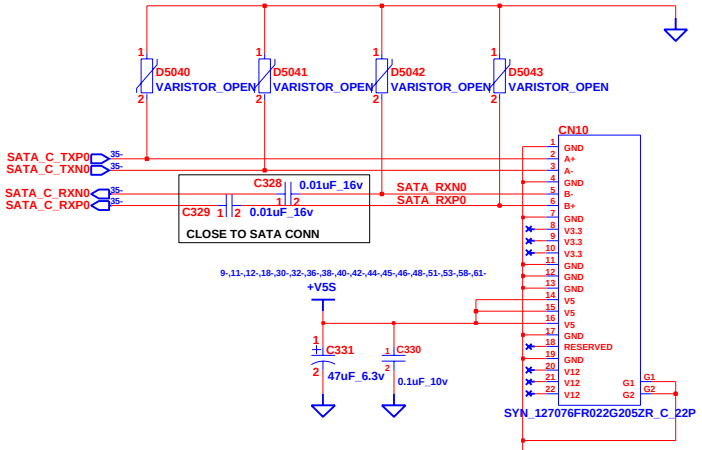

SATA HDD01

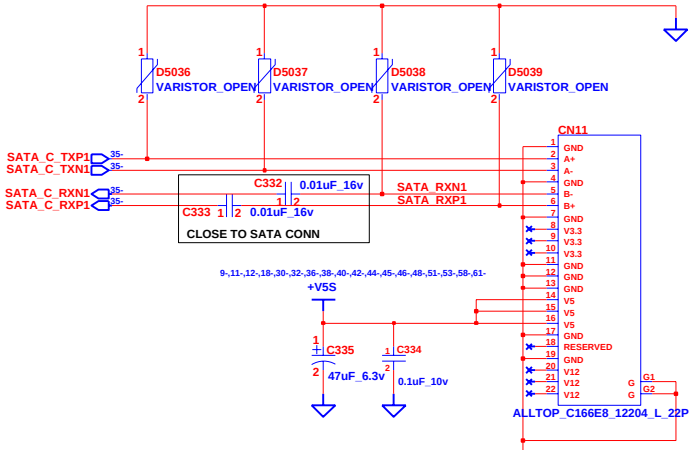

SATA HDD02

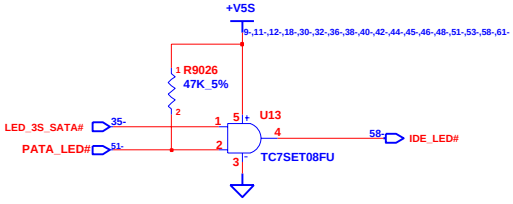

INVENTEC			
TITLE: 07A99 Preliminary Test HDD CONN			
SIZE A3	CODE CS	DOC. NUMBER	REV X01
CHANGE by KOBE	13-Dec-2007	SHEET 40 OF 63	

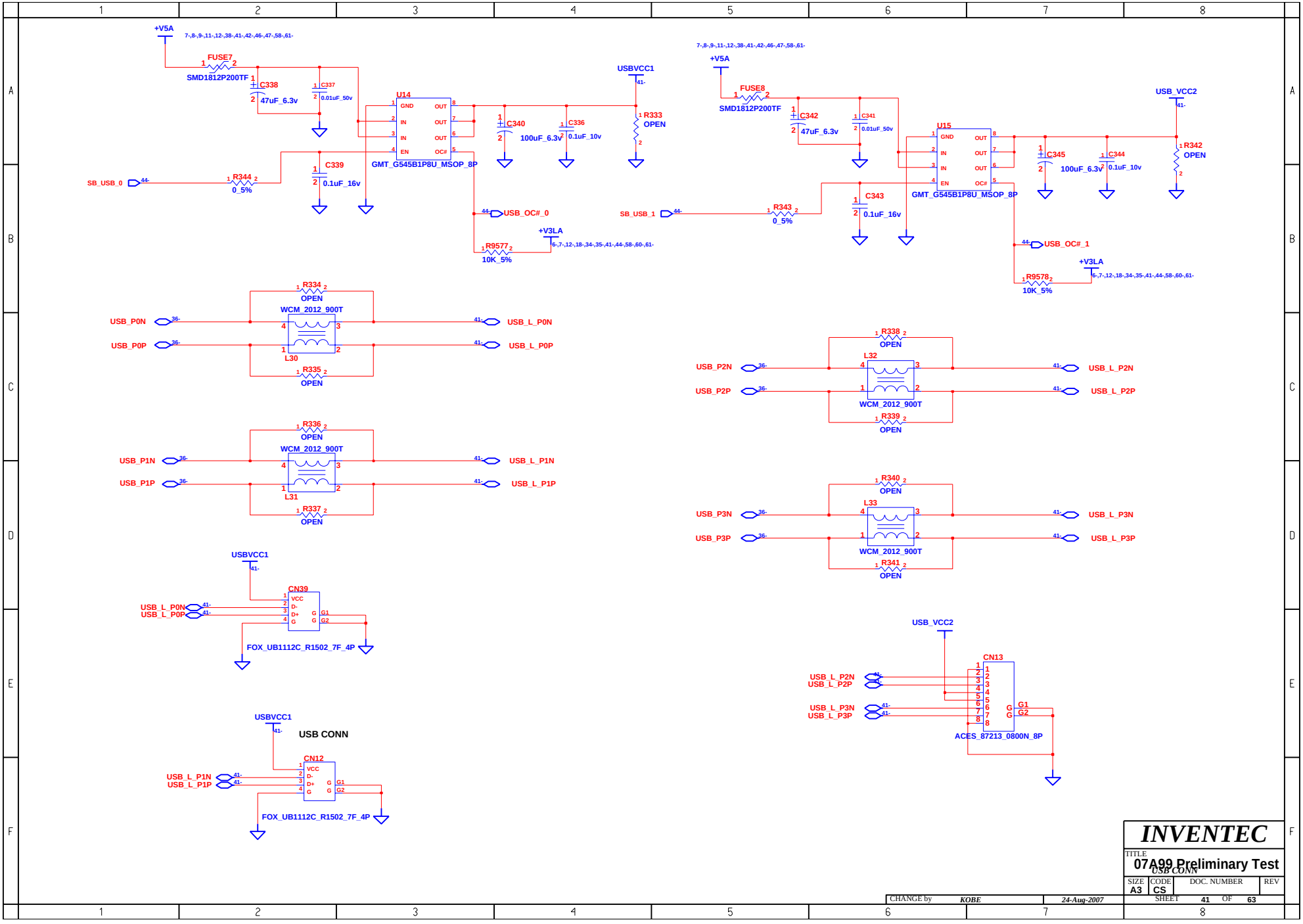
+V5A
7-,8-,9-,11-,12-,38-,41-,42-,46-,47-,58-,61-
FUSE7
SMD1812P200TF
C338
47uF_6.3v
C337
0.01uF_50v
U14
GMT_G545B1P8U_MSOP_8P
C339
0.1uF_16v
SB_USB_0
R344
0_5%
C340
100uF_6.3v
C336
0.1uF_10v
USBVCC1
R333
OPEN
USB_OC#_0
+V3LA
6-,7-,12-,18-,34-,35-,41-,44-,58-,60-,61-
R9577
10K_5%
FUSE8
SMD1812P200TF
C342
47uF_6.3v
C341
0.01uF_50v
U15
GMT_G545B1P8U_MSOP_8P
C343
0.1uF_16v
SB_USB_1
R343
0_5%
C345
100uF_6.3v
C344
0.1uF_10v
USB_VCC2
R342
OPEN
USB_OC#_1
R9578
10K_5%
R334
OPEN
WCM_2012_900T
L30
R335
OPEN
USB_P0N
USB_P0P
USB_L_P0N
USB_L_P0P
R336
OPEN
WCM_2012_900T
L31
R337
OPEN
USB_P1N
USB_P1P
USB_L_P1N
USB_L_P1P
R338
OPEN
L32
WCM_2012_900T
R339
OPEN
USB_P2N
USB_P2P
USB_L_P2N
USB_L_P2P
R340
OPEN
L33
WCM_2012_900T
R341
OPEN
USB_P3N
USB_P3P
USB_L_P3N
USB_L_P3P
USBVCC1
CN39
FOX_UB1112C_R1502_7F_4P
USB_L_P0N
USB_L_P0P
USB_VCC2
CN13
ACES_87213_0800N_8P
USB_L_P2N
USB_L_P2P
USB_L_P3N
USB_L_P3P
USBVCC1
USB CONN
CN12
FOX_UB1112C_R1502_7F_4P
USB_L_P1N
USB_L_P1P
INVENTEC
TITLE
07A99 Preliminary Test
USB CONN
SIZE A3
CODE CS
DOC. NUMBER
REV
SHEET 41 OF 63
CHANGE by KOBE
24-Aug-2007

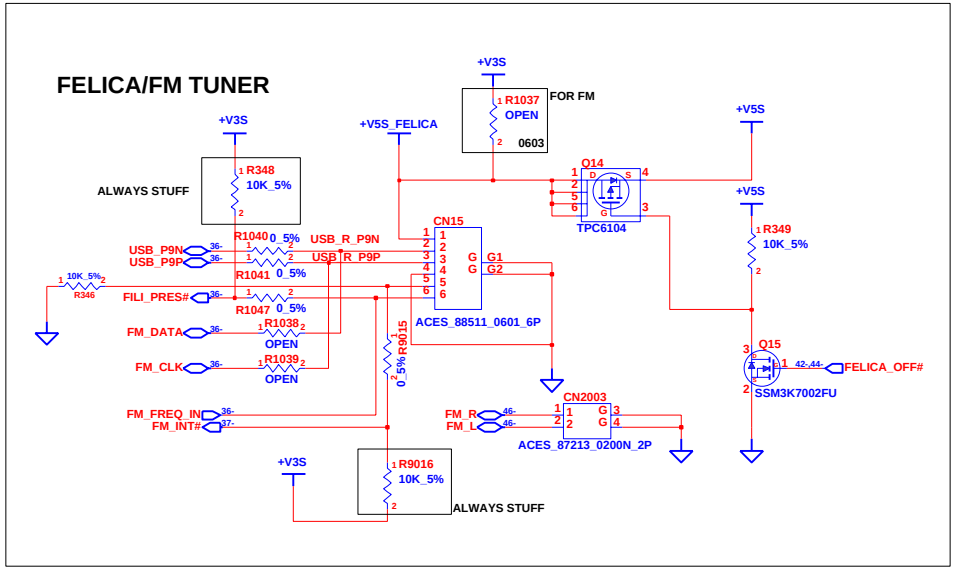

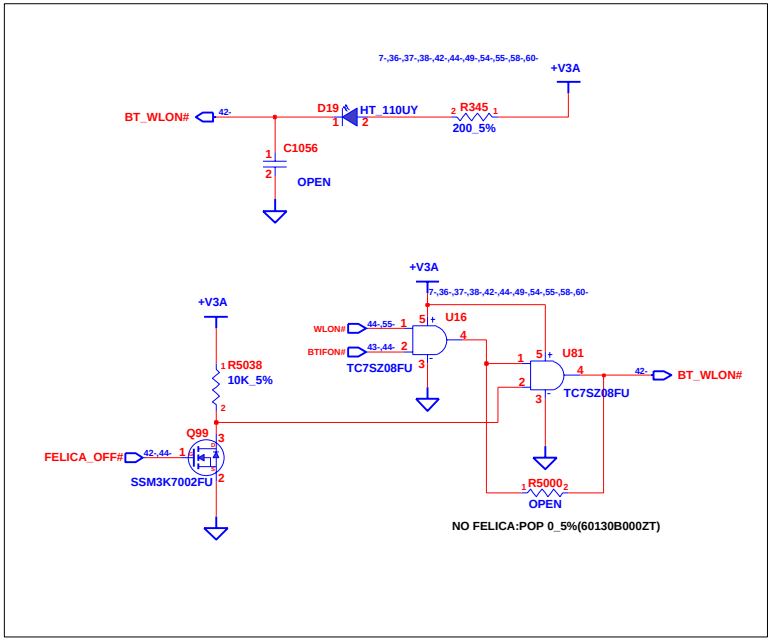

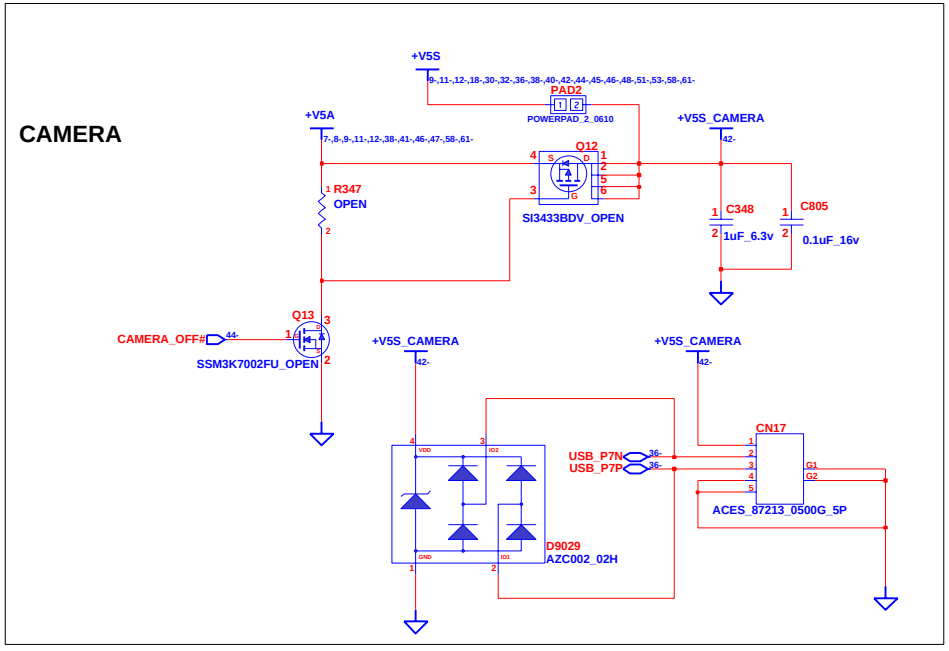

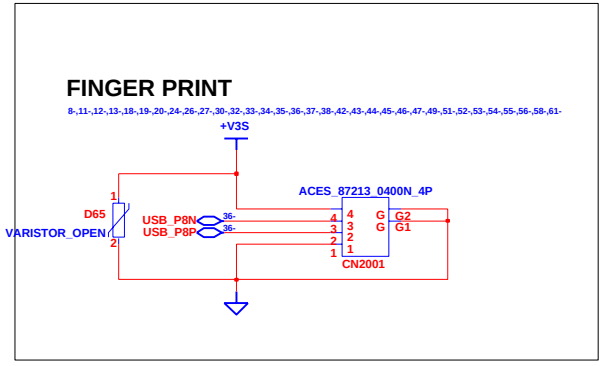

CHANGE by	KOBE	24-Oct-2007	

INVENTEC

TITLE: 07A99 Preliminary Test

FILICA&CAMERA

SIZE	CODE	DOC. NUMBER	REV
A3	CS		

SHEET 42 OF 63

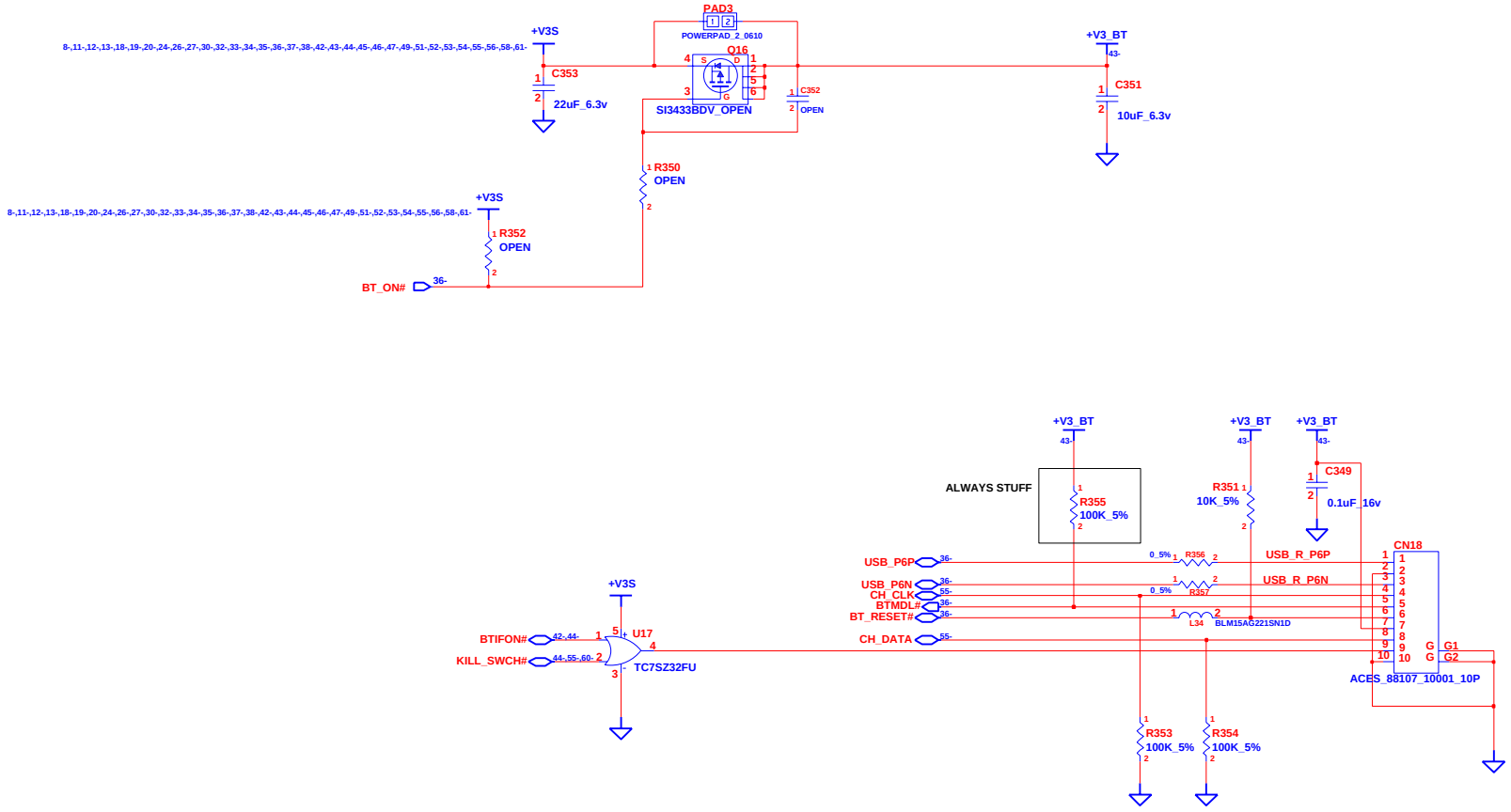

INVENTEC

TITLE
07A99 Preliminary Test
BLUETOOTH

SIZE	CODE	DOC. NUMBER	REV
A3	CS		

CHANGE by KOBE 25-Oct-2007

SHEET 43 OF 63

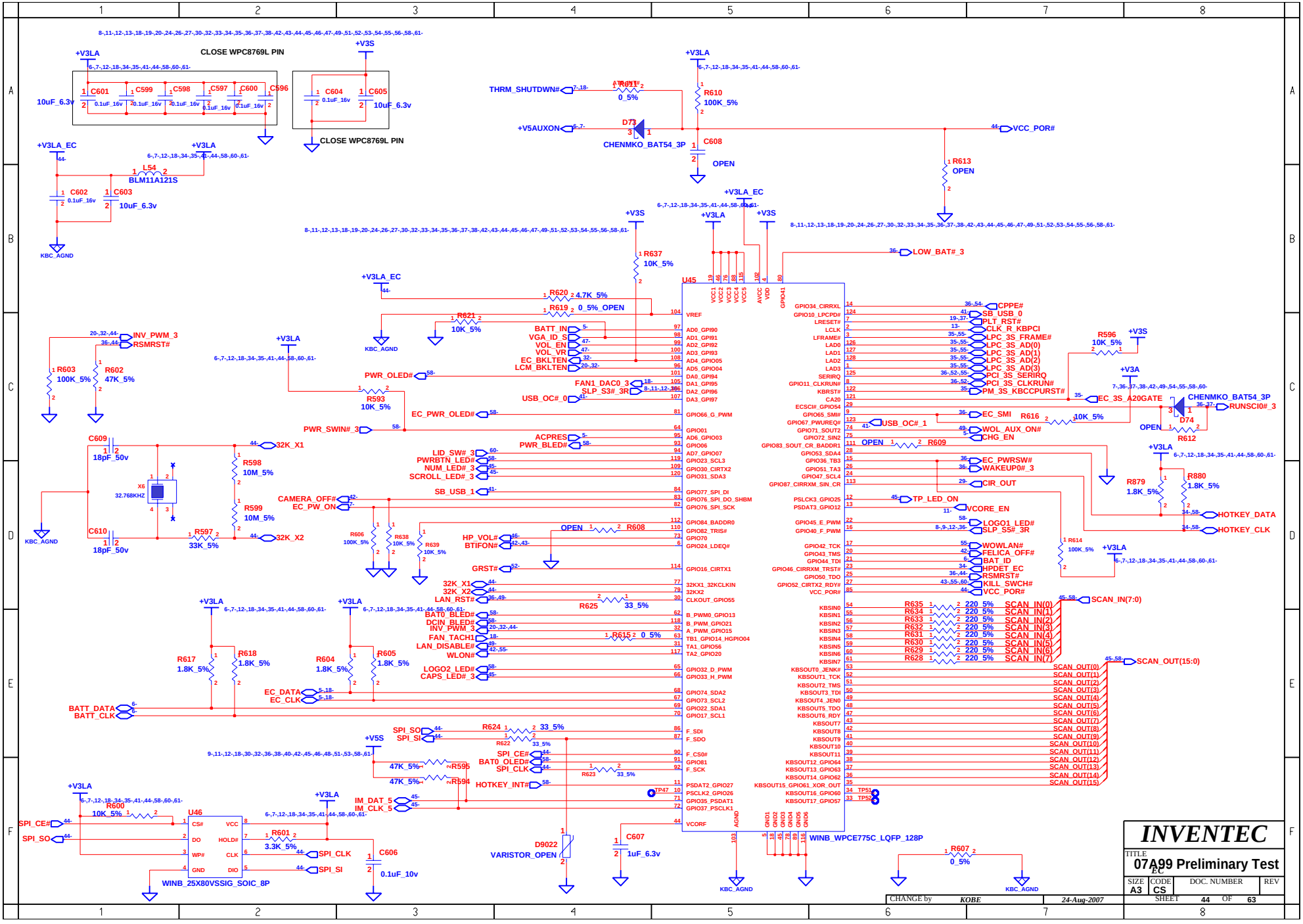
CLOSE WPC8769L PIN
+V3LA
+V3S
+V3LA_EC
+V5AUXON
+V5S
+V3A
THRM_SHUTDWN#
VCC_POR#
LOW_BAT#_3
INV_PWM_3
RSMRST#
PWR_OLED#
EC_PWR_OLED#
PWR_SWIN#_3
USB_OC#_0
USB_OC#_1
EC_3S_A20GATE
RUNSCI0#_3
EC_SMI
WOL_AUX_ON#
CHG_EN
EC_PWRSW#
WAKEUP0#_3
CIR_OUT
TP_LED_ON
VCORE_EN
LOGO1_LED#
SLP_S5#_3R
HOTKEY_DATA
HOTKEY_CLK
WOWLAN#
FELICA_OFF#
BAT_ID
HPDET_EC
RSMRST#
KILL_SWCH#
VCC_POR#
SCAN_IN(7:0)
SCAN_OUT(15:0)
32K_X1
32K_X2
LID_SW#_3
PWRBTN_LED#
NUM_LED#_3
SCROLL_LED#_3
SB_USB_1
CAMERA_OFF#
EC_PW_ON
HP_VOL#
BTIFON#
GRST#
LAN_RST#
BAT0_BLED#
DCIN_BLED#
FAN_TACH1
LAN_DISABLE#
WLON#
LOGO2_LED#
CAPS_LED#_3
EC_DATA
EC_CLK
BATT_DATA
BATT_CLK
SPI_SO
SPI_SI
SPI_CE#
SPI_CLK
HOTKEY_INT#
IM_DAT_5
IM_CLK_5
KBC_AGND
U45
WINB_WPCE775C_LQFP_128P
U46
WINB_25X80VSSIG_SOIC_8P
D9022
VARISTOR_OPEN
INVENTEC
TITLE
07A99 Preliminary Test
SIZE A3
CODE CS
DOC. NUMBER
REV
SHEET 44 OF 63
CHANGE by KOBE
24-Aug-2007

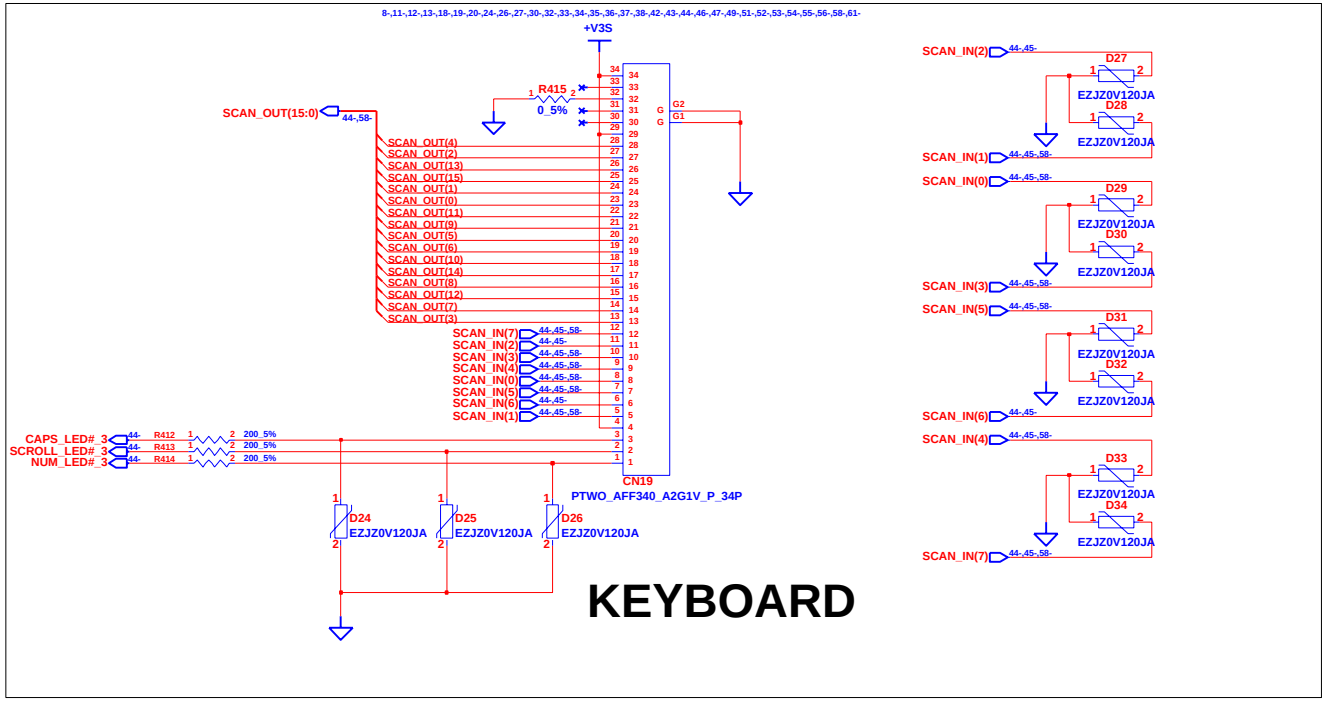

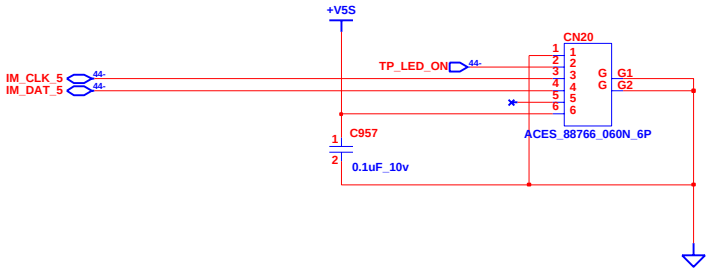

CHANGE by	KOBE	3-Sep-2007	

INVENTEC

TITLE: 07A99 Preliminary Test

IN1.KB/POINT DEVICE

SIZE	CODE	DOC. NUMBER	REV
A3	CS		

SHEET 45 OF 63

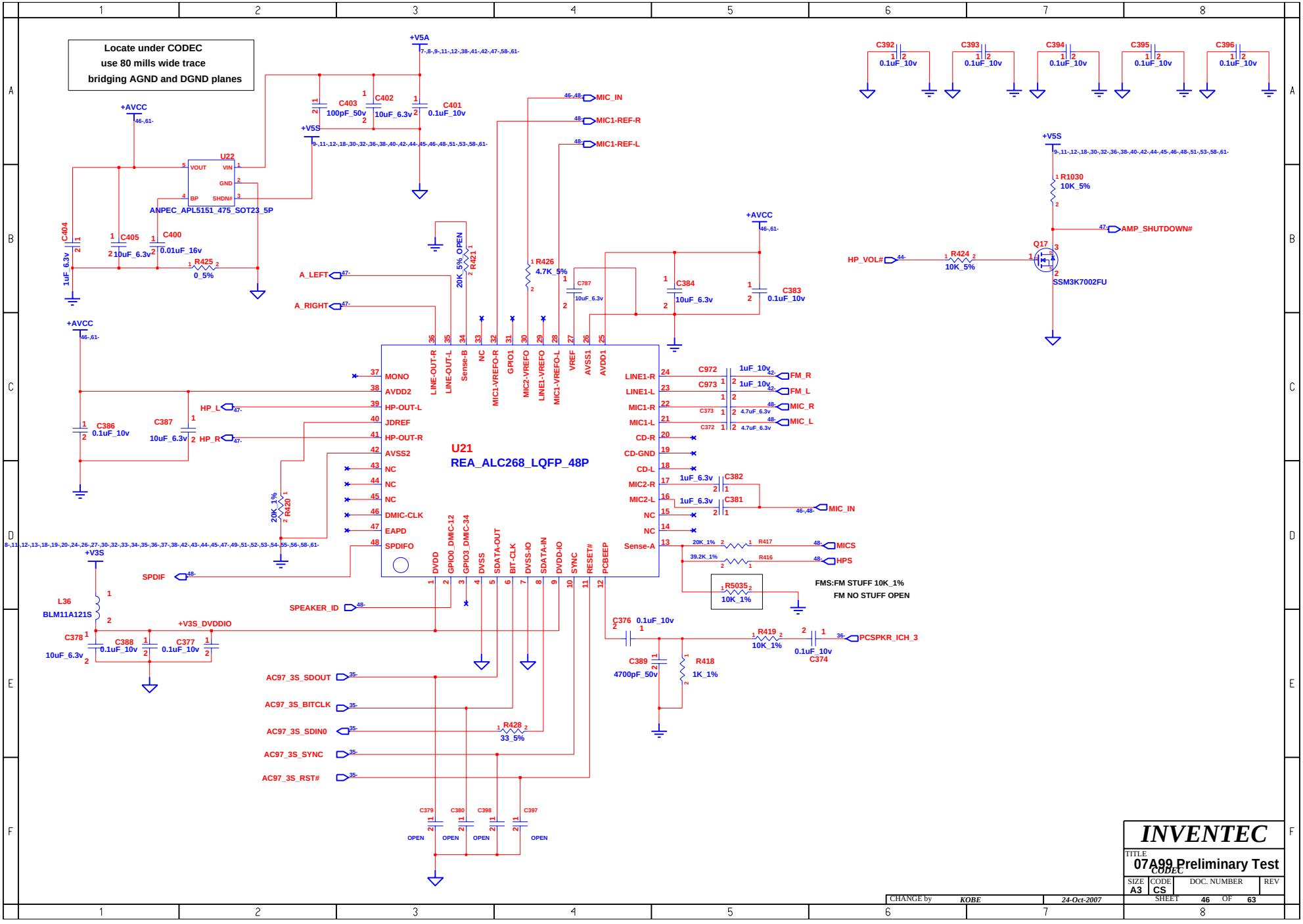
Locate under CODEC
use 80 mills wide trace
bridging AGND and DGND planes
U21
REA_ALC268_LQFP_48P
U22
ANPEC_APL5151_475_SOT23_5P
Q17
SSM3K7002FU
FMS:FM STUFF 10K_1%
FM NO STUFF OPEN
INVENTEC
TITLE
07A99 Preliminary Test
CODEC
SIZE A3
CODE CS
DOC. NUMBER
REV
SHEET 46 OF 63
CHANGE by KOBE
24-Oct-2007

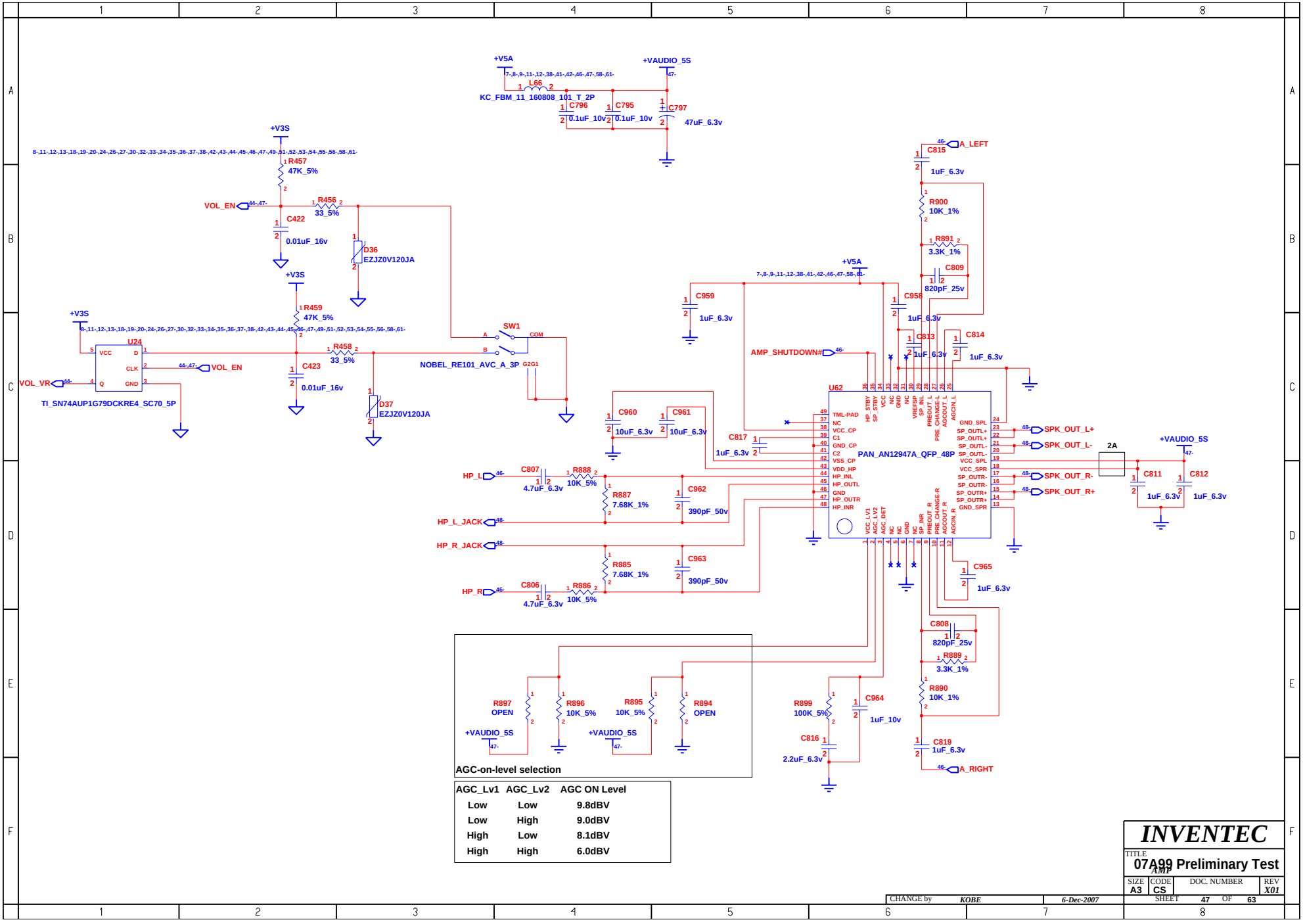

AGC_Lv1	AGC_Lv2	AGC ON Level
Low	Low	9.8dBV
Low	High	9.0dBV
High	Low	8.1dBV
High	High	6.0dBV

INVENTEC

TITLE: 07A99 Preliminary Test AMP

SIZE	CODE	DOC. NUMBER	REV
A3	CS		X01

CHANGE by KOBE 6-Dec-2007

SHEET 47 OF 63

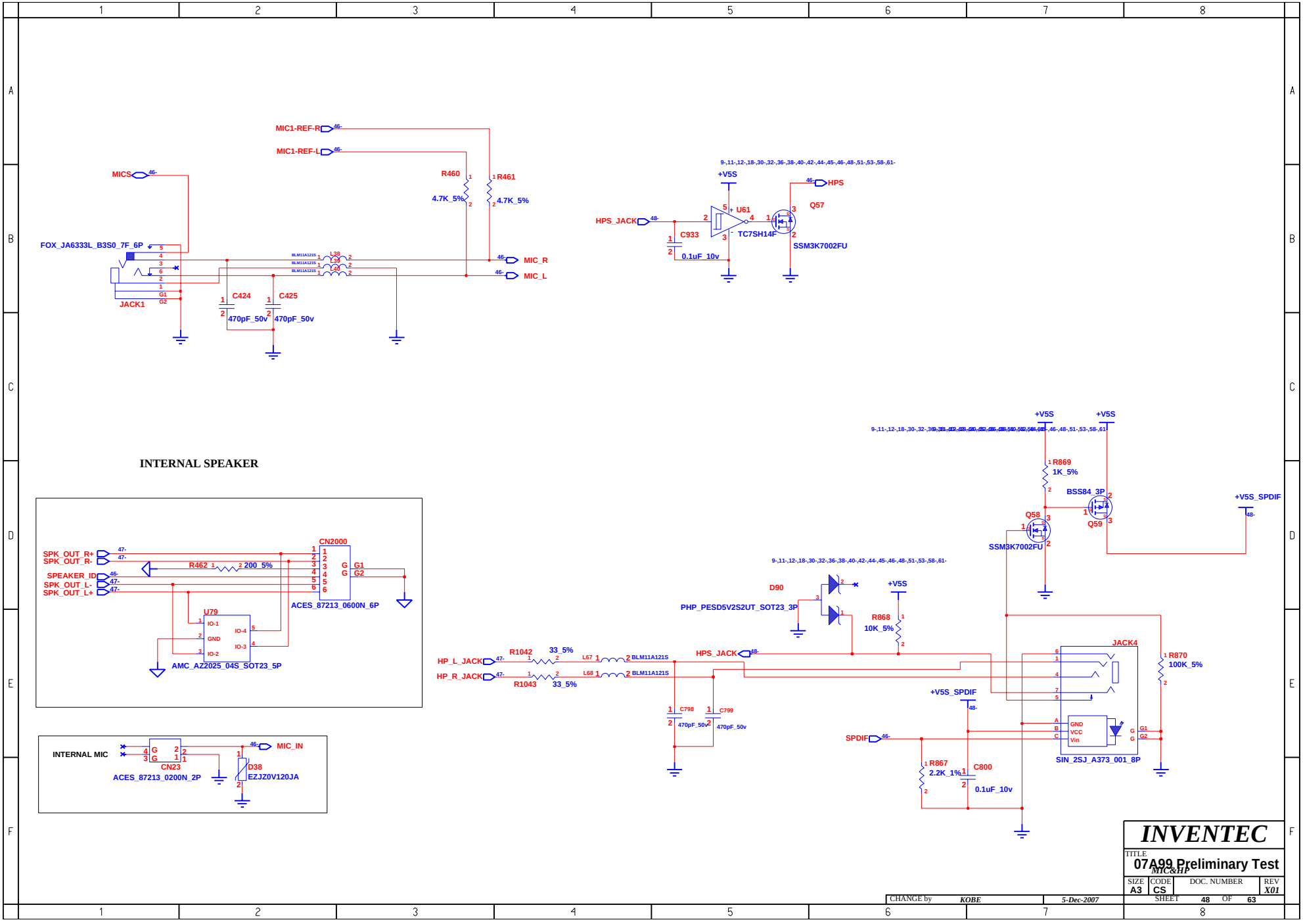
MIC1-REF-R
MIC1-REF-L
MICS
R460
4.7K_5%
R461
4.7K_5%
FOX_JA6333L_B3S0_7F_6P
JACK1
C424
470pF_50v
C425
470pF_50v
MIC_R
MIC_L
HPS_JACK
C933
0.1uF_10v
U61
TC7SH14F
+V5S
HPS
Q57
SSM3K7002FU
INTERNAL SPEAKER
SPK_OUT_R+
SPK_OUT_R-
SPEAKER_ID
SPK_OUT_L-
SPK_OUT_L+
R462
200_5%
CN2000
ACES_87213_0600N_6P
U79
AMC_AZ2025_04S_SOT23_5P
INTERNAL MIC
CN23
ACES_87213_0200N_2P
MIC_IN
D38
EZJZ0V120JA
R869
1K_5%
BSS84_3P
Q59
Q58
SSM3K7002FU
+V5S_SPDIF
D90
PHP_PESD5V2S2UT_SOT23_3P
R868
10K_5%
HP_L_JACK
HP_R_JACK
R1042
R1043
33_5%
L67
L68
BLM11A121S
HPS_JACK
C798
C799
470pF_50v
JACK4
SIN_2SJ_A373_001_8P
R870
100K_5%
SPDIF
R867
2.2K_1%
C800
0.1uF_10v
INVENTEC
TITLE
07A99 Preliminary Test
MIC&HP
SIZE A3
CODE CS
DOC. NUMBER
REV X01
CHANGE by KOBE
5-Dec-2007
SHEET 48 OF 63

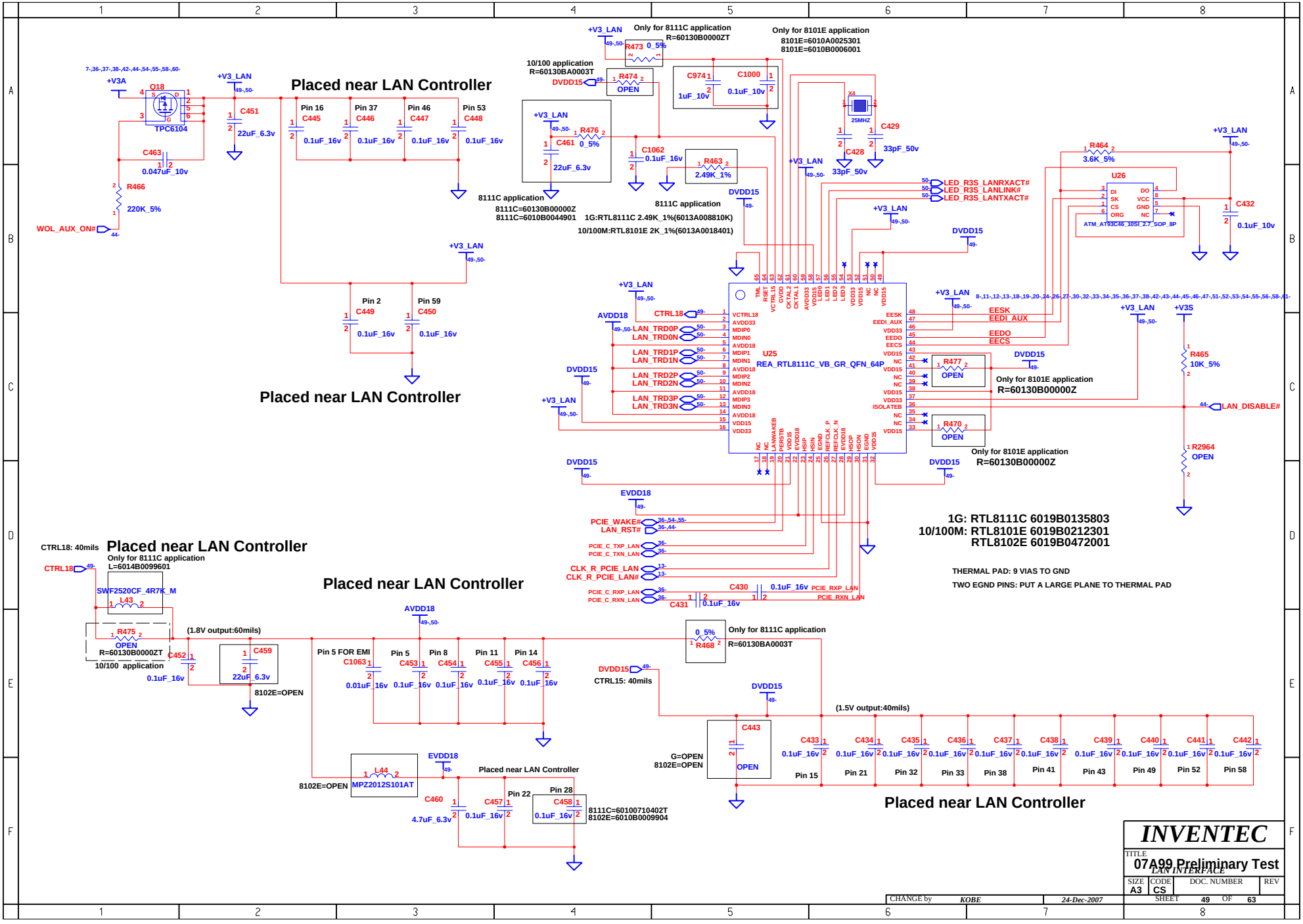
Placed near LAN Controller
Only for 8111C application
R=60130B0000ZT
Only for 8101E application
8101E=6010A0025301
8101E=6010B0006001
10/100 application
R=60130BA0003T
8111C application
8111C=60130B00000Z
8111C=6010B0044901
1G:RTL8111C 2.49K_1%(6013A008810K)
10/100M:RTL8101E 2K_1%(6013A0018401)
U25
REA_RTL8111C_VB_GR_QFN_64P
U26
ATM_AT93C46_10SI_2.7_SOP_8P
Only for 8101E application
R=60130B00000Z
1G: RTL8111C 6019B0135803
10/100M: RTL8101E 6019B0212301
RTL8102E 6019B0472001
THERMAL PAD: 9 VIAS TO GND
TWO EGND PINS: PUT A LARGE PLANE TO THERMAL PAD
CTRL18: 40mils
Only for 8111C application
L=6014B0099601
SWF2520CF_4R7K_M
(1.8V output:60mils)
R=60130B0000ZT
10/100 application
8102E=OPEN
Only for 8111C application
R=60130BA0003T
CTRL15: 40mils
(1.5V output:40mils)
G=OPEN
8102E=OPEN
8102E=OPEN
MPZ2012S101AT
8111C=60100710402T
8102E=6010B0009904
INVENTEC
TITLE
07A99 Preliminary Test
LAN INTERFACE
SIZE A3
CODE CS
DOC. NUMBER
REV
CHANGE by KOBE
24-Dec-2007
SHEET 49 OF 63

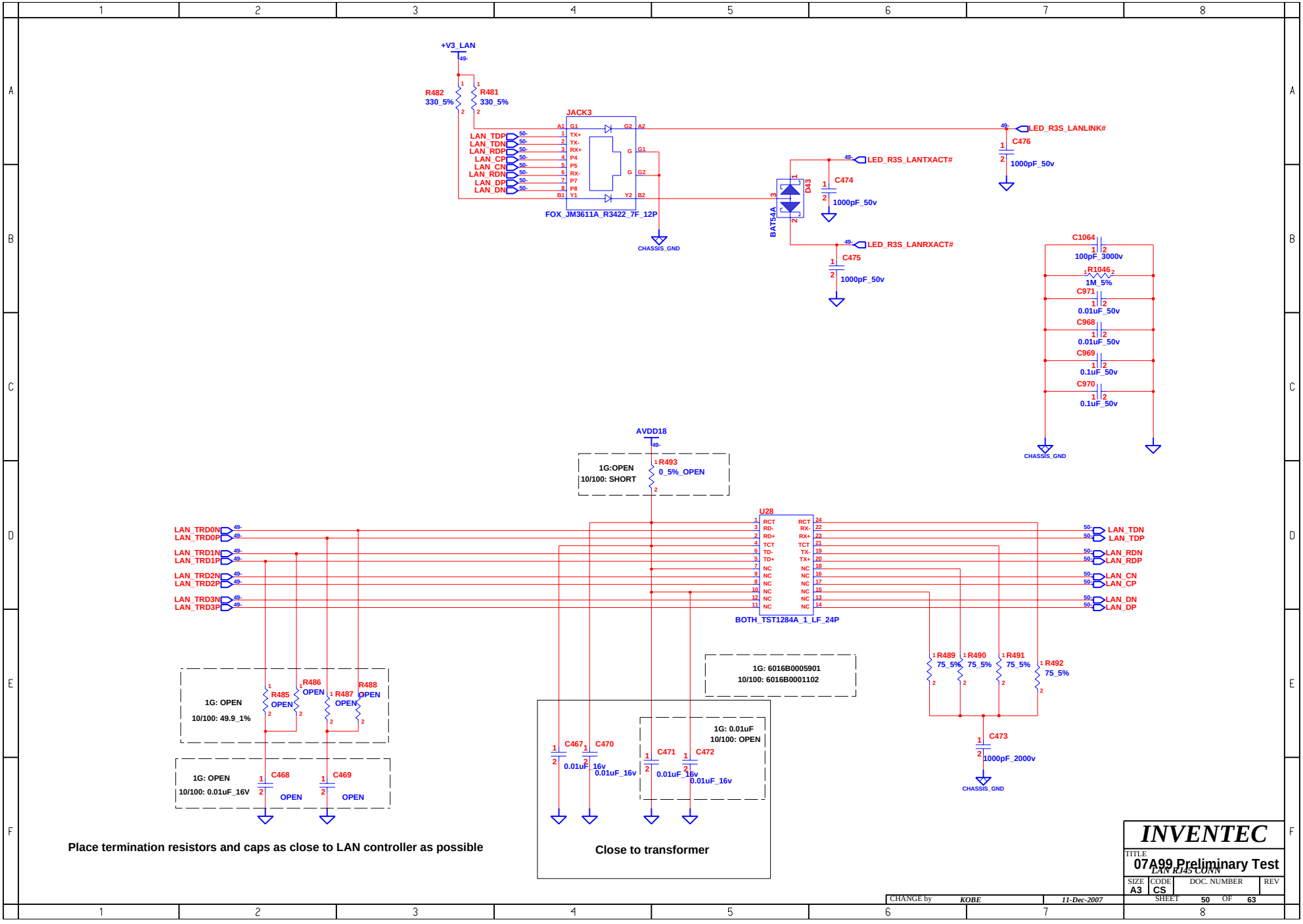
+V3_LAN
R482 330_5%
R481 330_5%
JACK3
LAN_TDP
LAN_TDN
LAN_RDP
LAN_CP
LAN_CN
LAN_RDN
LAN_DP
LAN_DN
FOX_JM3611A_R3422_7F_12P
CHASSIS_GND
LED_R3S_LANLINK#
C476
1000pF_50v
LED_R3S_LANTXACT#
C474
1000pF_50v
D43
BAT54A
LED_R3S_LANRXACT#
C475
1000pF_50v
C1064
100pF_3000v
R1046
1M_5%
C971
0.01uF_50v
C968
0.01uF_50v
C969
0.1uF_50v
C970
0.1uF_50v
CHASSIS_GND
AVDD18
1G:OPEN
10/100: SHORT
R493
0_5%_OPEN
U28
LAN_TRD0N
LAN_TRD0P
LAN_TRD1N
LAN_TRD1P
LAN_TRD2N
LAN_TRD2P
LAN_TRD3N
LAN_TRD3P
BOTH_TST1284A_1_LF_24P
LAN_TDN
LAN_TDP
LAN_RDN
LAN_RDP
LAN_CN
LAN_CP
LAN_DN
LAN_DP
1G: OPEN
10/100: 49.9_1%
R485 OPEN
R486 OPEN
R487 OPEN
R488 OPEN
1G: OPEN
10/100: 0.01uF_16V
C468 OPEN
C469 OPEN
1G: 6016B0005901
10/100: 6016B0001102
R489 75_5%
R490 75_5%
R491 75_5%
R492 75_5%
C473
1000pF_2000v
CHASSIS_GND
C467 0.01uF_16v
C470 0.01uF_16v
1G: 0.01uF
10/100: OPEN
C471 0.01uF_16v
C472 0.01uF_16v
Close to transformer
Place termination resistors and caps as close to LAN controller as possible
INVENTEC
TITLE
07A99 Preliminary Test
LAN RJ45 CONN
SIZE A3
CODE CS
DOC. NUMBER
REV
SHEET 50 OF 63
CHANGE by KOBE
11-Dec-2007

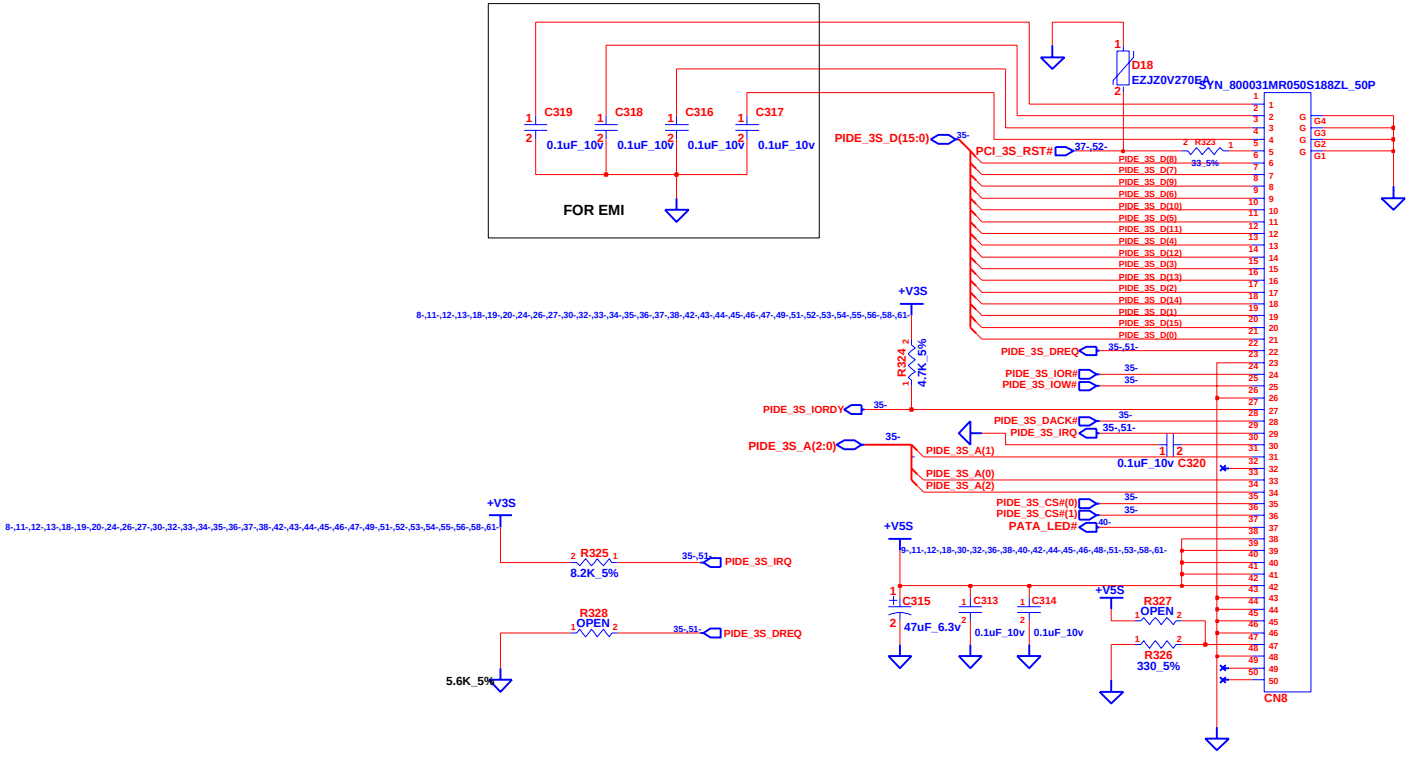

INVENTEC			
TITLE 07A99 ODD Preliminary Test			
SIZE A3	CODE CS	DOC. NUMBER	REV X01
CHANGE by KOBE	24-Aug-2007	SHEET 51 OF 63	

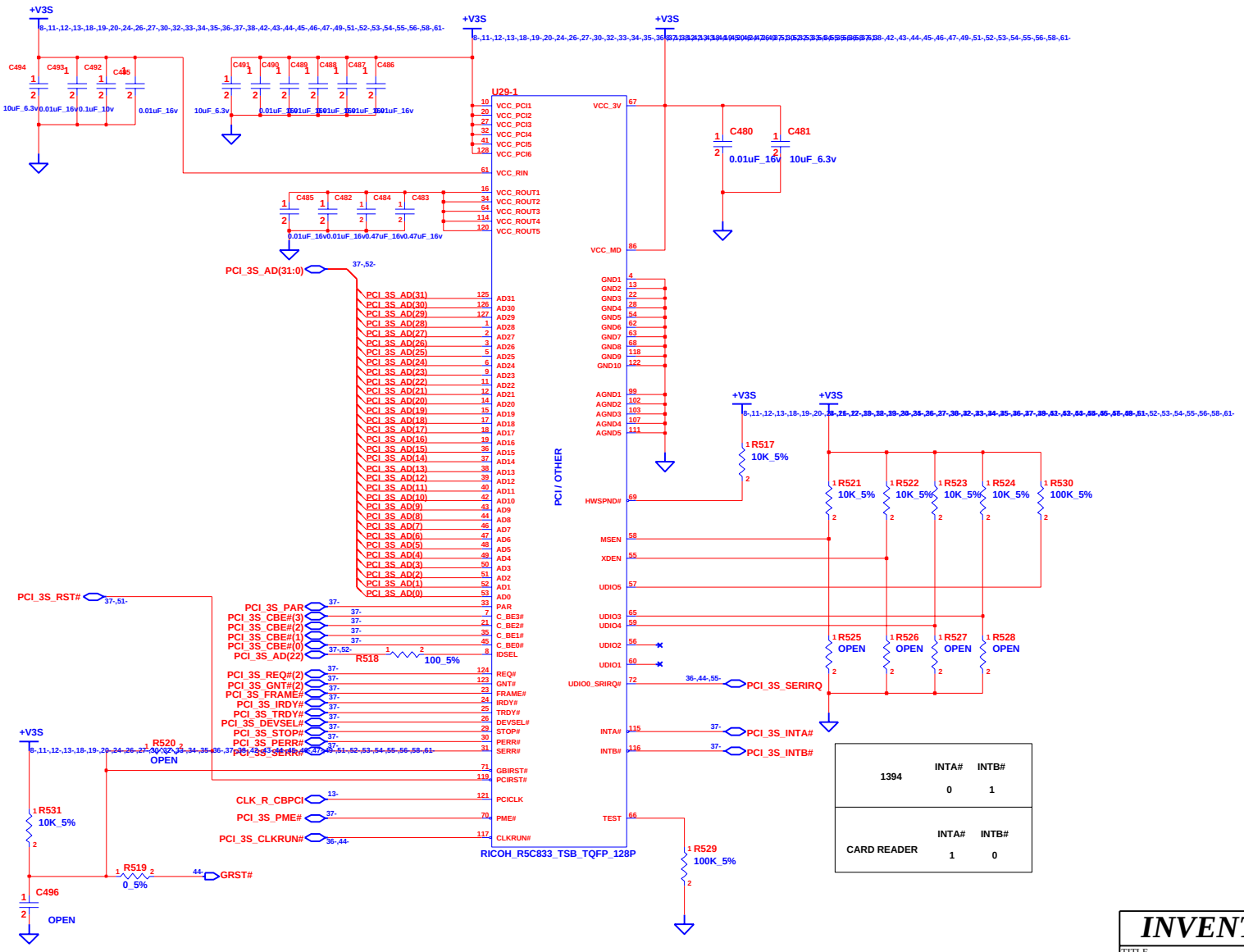
U29-1
RICOH_R5C833_TSB_TQFP_128P
PCI / OTHER
+V3S
PCI_3S_AD(31:0)
PCI_3S_RST#
PCI_3S_PAR
PCI_3S_CBE#(3)
PCI_3S_CBE#(2)
PCI_3S_CBE#(1)
PCI_3S_CBE#(0)
PCI_3S_AD(22)
PCI_3S_REQ#(2)
PCI_3S_GNT#(2)
PCI_3S_FRAME#
PCI_3S_IRDY#
PCI_3S_TRDY#
PCI_3S_DEVSEL#
PCI_3S_STOP#
PCI_3S_PERR#
PCI_3S_SERR#
CLK_R_CBPCI
PCI_3S_PME#
PCI_3S_CLKRUN#
PCI_3S_SERIRQ
PCI_3S_INTA#
PCI_3S_INTB#
GRST#
R518 100_5%
R520 OPEN
R519 0_5%
R531 10K_5%
R529 100K_5%
R517 10K_5%
R521 10K_5%
R522 10K_5%
R523 10K_5%
R524 10K_5%
R530 100K_5%
R525 OPEN
R526 OPEN
R527 OPEN
R528 OPEN
C480 0.01uF_16v
C481 10uF_6.3v
C496 OPEN
1394 INTA# 0 INTB# 1
CARD READER INTA# 1 INTB# 0
INVENTEC
TITLE 07A99 Preliminary Test
1394&CARDREADER CONTROLLOR
SIZE A3 CODE CS DOC. NUMBER REV X01
CHANGE by KOBE 12-Sep-2007
SHEET 52 OF 63

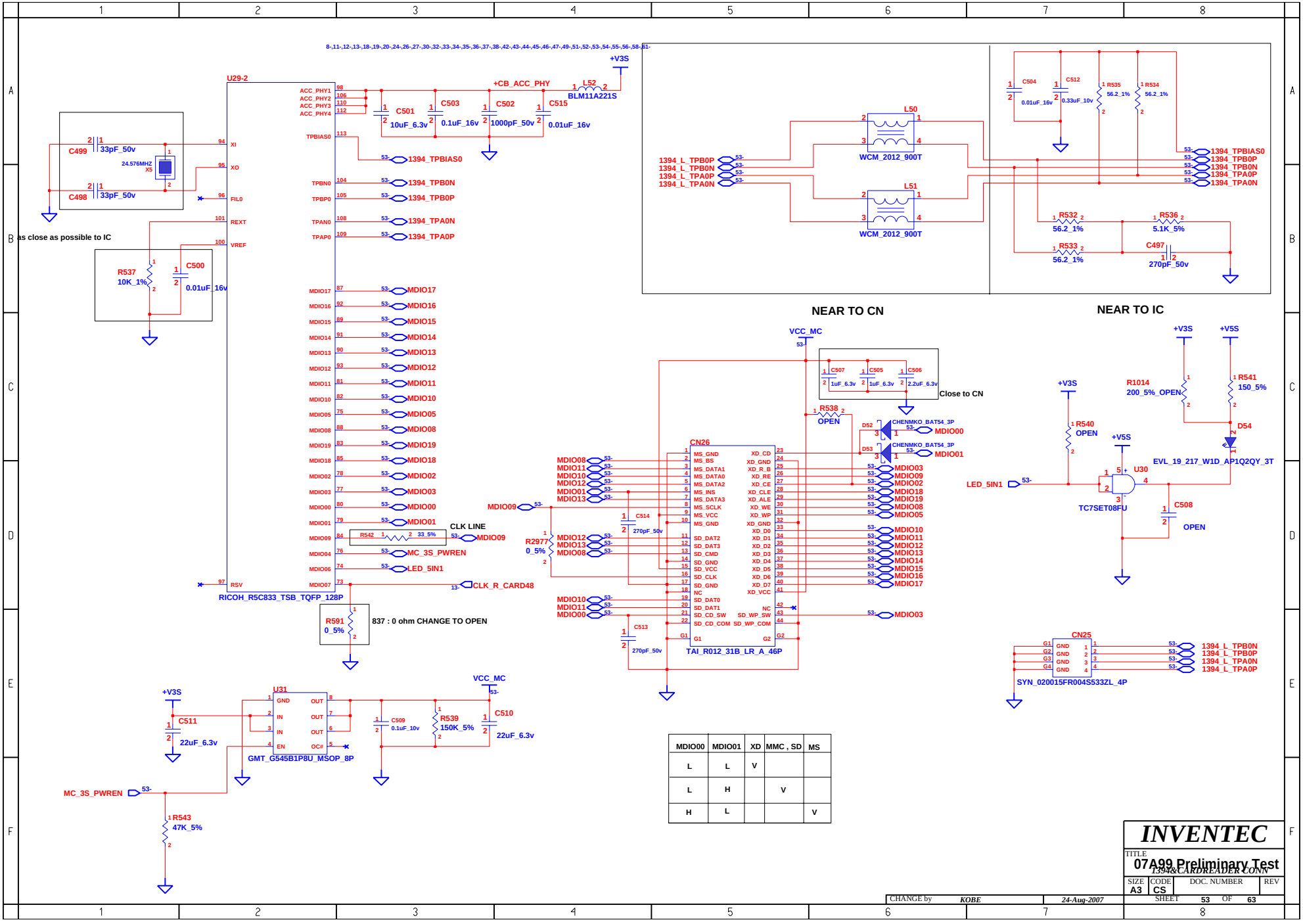

MDIO00	MDIO01	XD	MMC , SD	MS
L	L	V		
L	H		V	
H	L			V

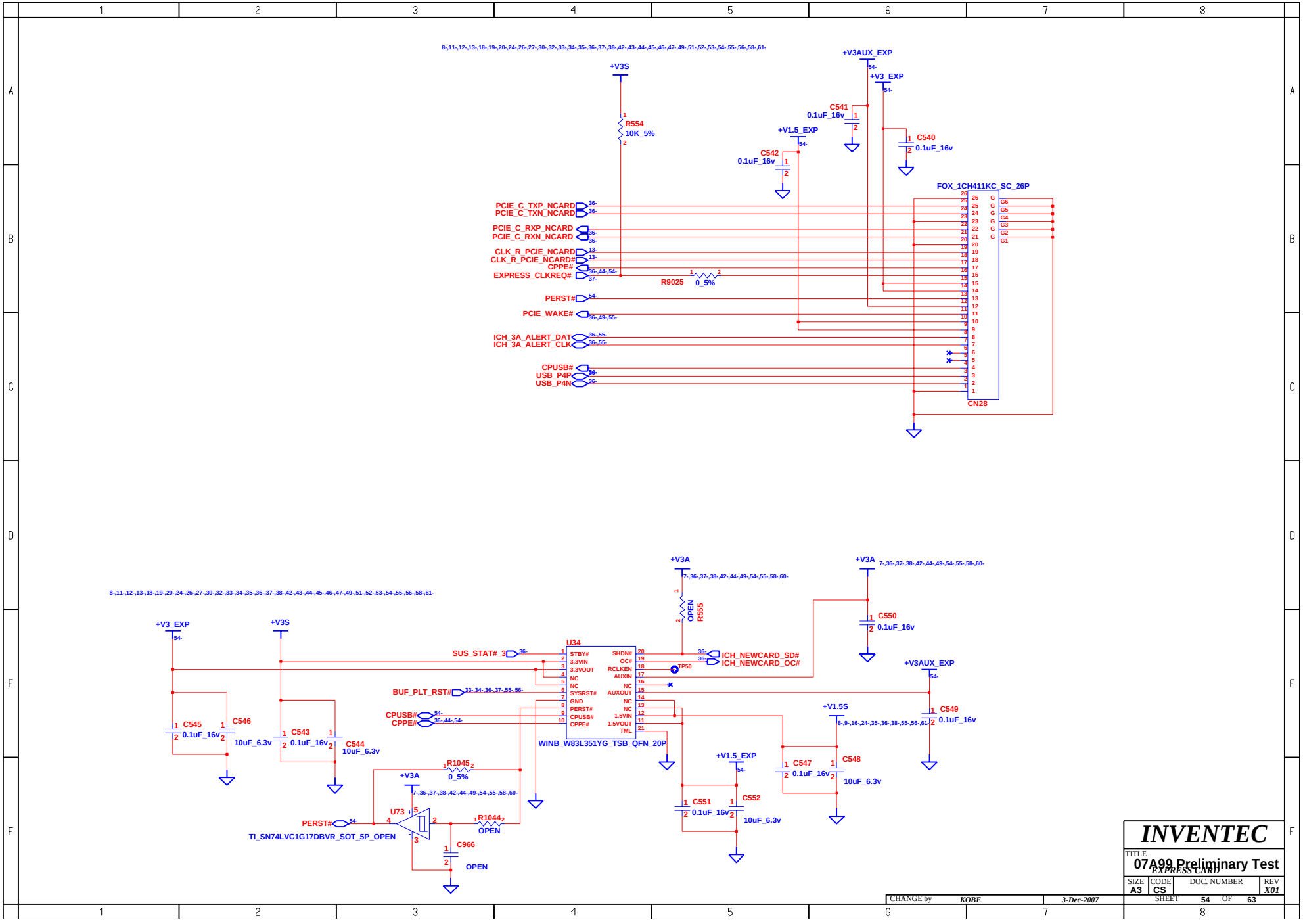
8-,11-,12-,13-,18-,19-,20-,24-,26-,27-,30-,32-,33-,34-,35-,36-,37-,38-,42-,43-,44-,45-,46-,47-,49-,51-,52-,53-,54-,55-,56-,58-,61-
+V3S
R554
10K_5%
+V3AUX_EXP
+V3_EXP
C541
0.1uF_16v
+V1.5_EXP
C542
0.1uF_16v
C540
0.1uF_16v
FOX_1CH411KC_SC_26P
PCIE_C_TXP_NCARD
PCIE_C_TXN_NCARD
PCIE_C_RXP_NCARD
PCIE_C_RXN_NCARD
CLK_R_PCIE_NCARD
CLK_R_PCIE_NCARD#
CPPE#
EXPRESS_CLKREQ#
R9025
0_5%
PERST#
PCIE_WAKE#
ICH_3A_ALERT_DAT
ICH_3A_ALERT_CLK
CPUSB#
USB_P4P
USB_P4N
CN28
+V3A
7-,36-,37-,38-,42-,44-,49-,54-,55-,58-,60-
OPEN
R555
ICH_NEWCARD_SD#
ICH_NEWCARD_OC#
TP50
C550
0.1uF_16v
+V3_EXP
+V3S
SUS_STAT#_3
BUF_PLT_RST#
33-,34-,36-,37-,55-,56-
CPUSB#
CPPE#
U34
STBY#
3.3VIN
3.3VOUT
NC
NC
SYSRST#
GND
PERST#
CPUSB#
CPPE#
SHDN#
OC#
RCLKEN
AUXIN
NC
AUXOUT
NC
NC
1.5VIN
1.5VOUT
TML
WINB_W83L351YG_TSB_QFN_20P
C545
0.1uF_16v
C546
10uF_6.3v
C543
0.1uF_16v
C544
10uF_6.3v
+V3AUX_EXP
C549
0.1uF_16v
+V1.5S
8-,9-,16-,24-,35-,36-,38-,55-,56-,61-
C547
0.1uF_16v
C548
10uF_6.3v
+V1.5_EXP
C551
0.1uF_16v
C552
10uF_6.3v
R1045
0_5%
R1044
OPEN
U73
PERST#
TI_SN74LVC1G17DBVR_SOT_5P_OPEN
C966
OPEN
INVENTEC
TITLE
07A99 Preliminary Test
EXPRESS CARD
SIZE A3
CODE CS
DOC. NUMBER
REV X01
CHANGE by KOBE
3-Dec-2007
SHEET 54 OF 63

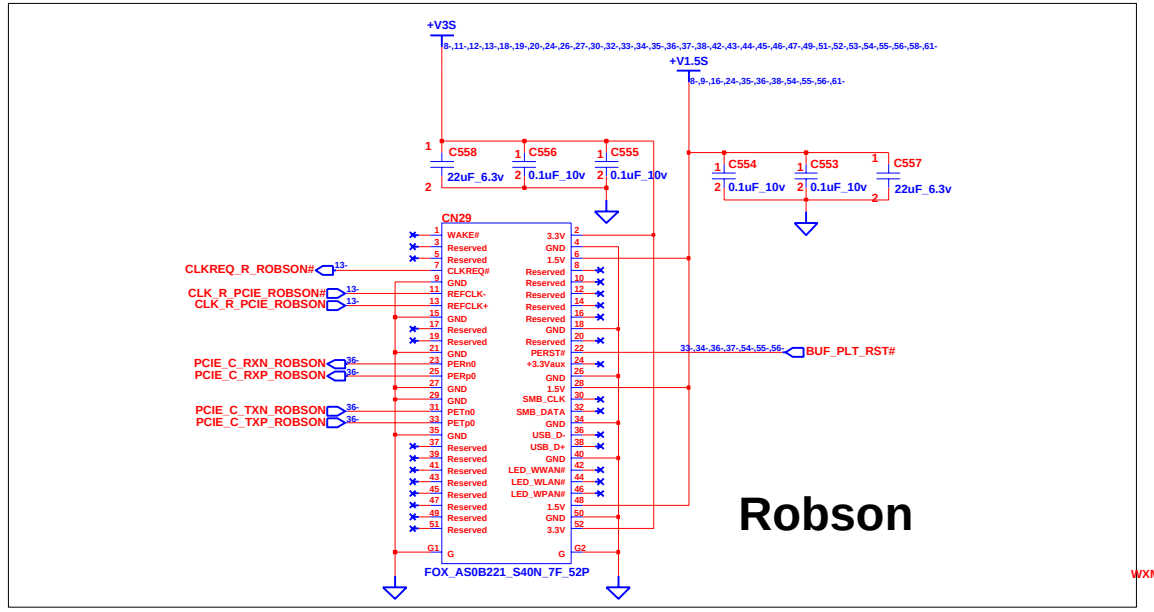

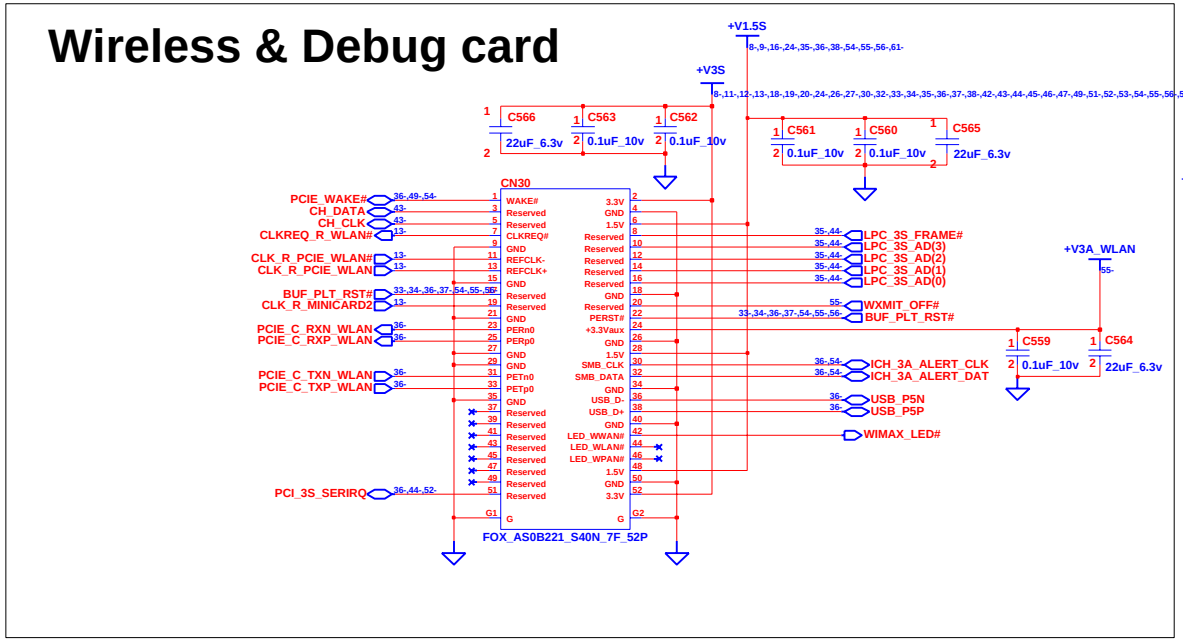

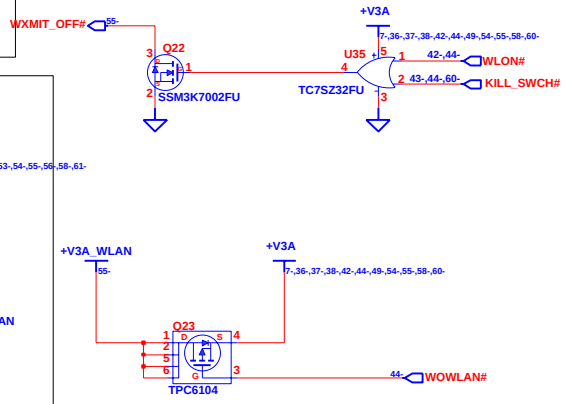

CHANGE by	KOBE	20-Nov-2007	

INVENTEC

TITLE: 07A99 Preliminary Test
ROBSON&WIRELESS

SIZE	CODE	DOC. NUMBER	REV
A3	CS		

SHEET 55 OF 63

HD-DVD

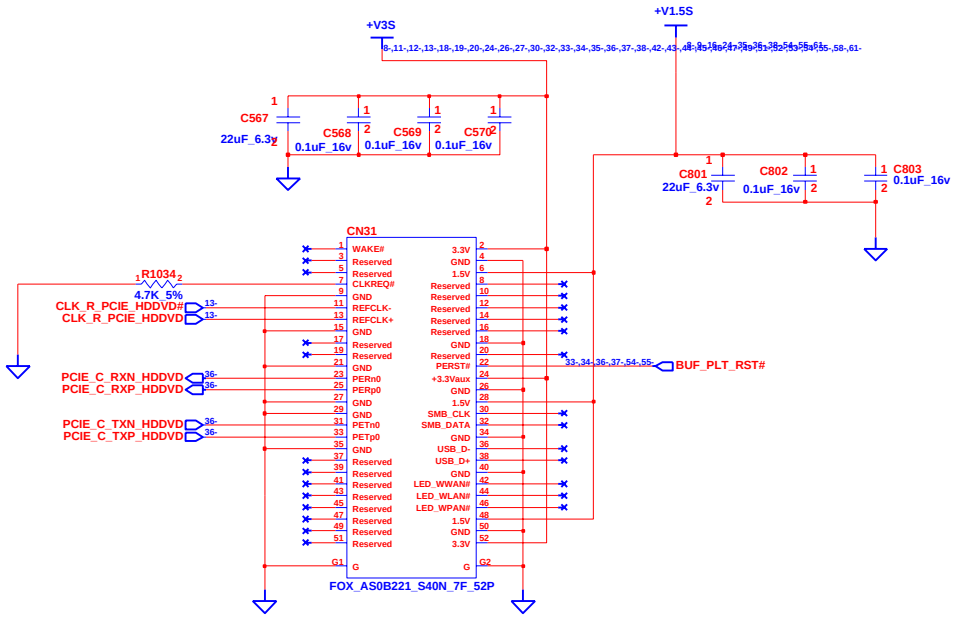

CHANGE by	KOBE	12-Sep-2007	

INVENTEC

TITLE: 07A99 Preliminary Test HD-DVD

SIZE	CODE	DOC. NUMBER	REV
A3	CS		X01

SHEET 56 OF 63

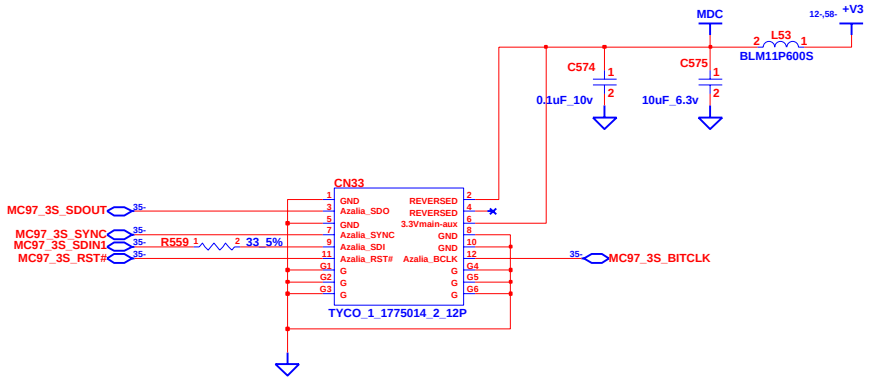

INVENTEC

TITLE
07A99 Preliminary Test
MDC

SIZE	CODE	DOC. NUMBER	REV
A3	CS		X01

CHANGE by KOBE 3-Dec-2007

SHEET 57 OF 63

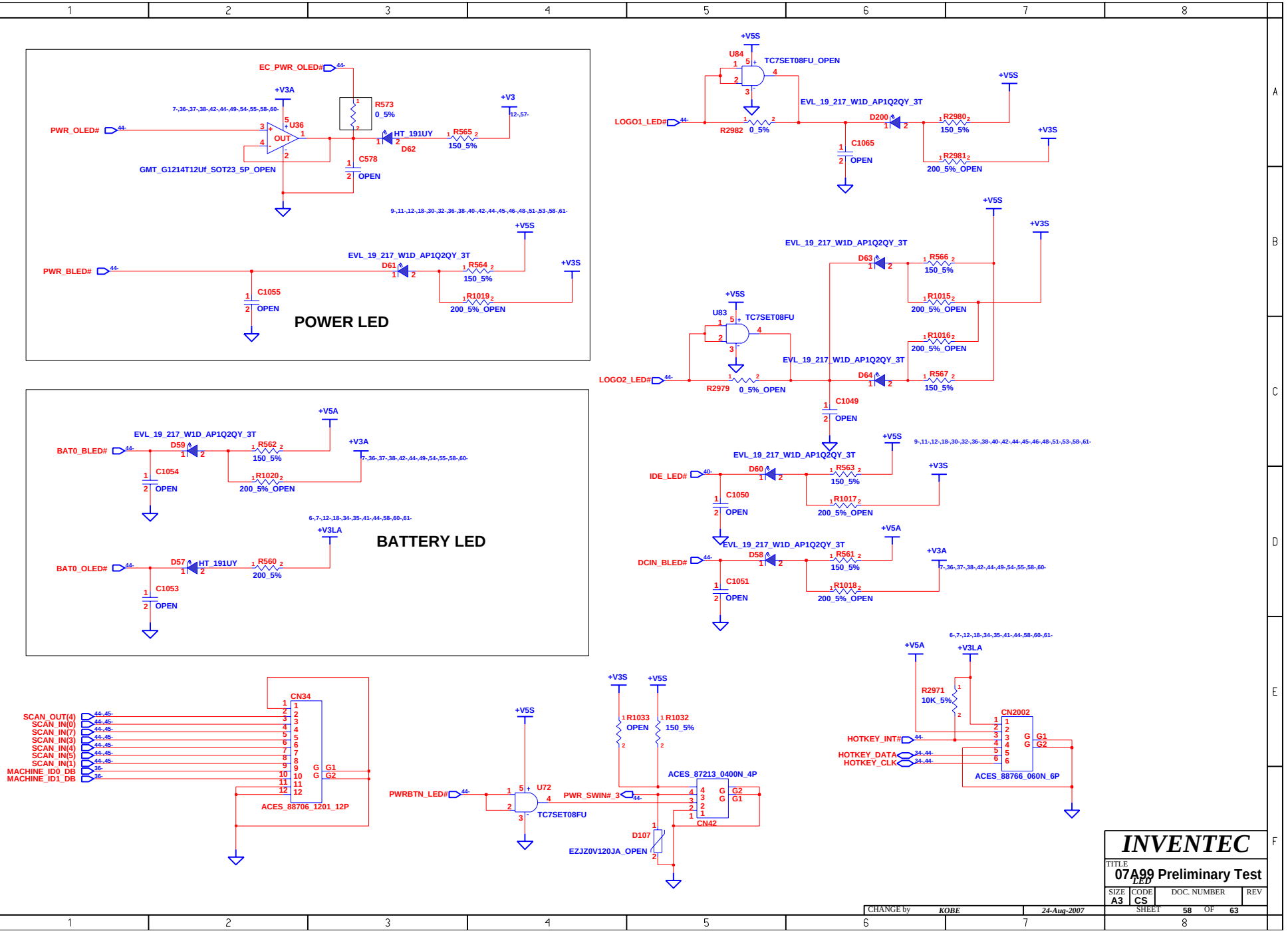
POWER LED
EC_PWR_OLED#
+V3A
PWR_OLED#
U36
OUT
GMT_G1214T12Uf_SOT23_5P_OPEN
R573
0_5%
HT_191UY
D62
R565
150_5%
+V3
C578
OPEN
PWR_BLED#
EVL_19_217_W1D_AP1Q2QY_3T
D61
R564
150_5%
+V5S
+V3S
C1055
OPEN
R1019
200_5%_OPEN
BATTERY LED
BAT0_BLED#
D59
R562
150_5%
+V5A
+V3A
C1054
OPEN
R1020
200_5%_OPEN
BAT0_OLED#
D57
HT_191UY
R560
200_5%
+V3LA
C1053
OPEN
LOGO1_LED#
U84
TC7SET08FU_OPEN
R2982
0_5%
D200
R2980
150_5%
C1065
OPEN
R2981
200_5%_OPEN
LOGO2_LED#
U83
TC7SET08FU
R2979
0_5%_OPEN
D63
R566
150_5%
R1015
200_5%_OPEN
R1016
200_5%_OPEN
D64
R567
150_5%
C1049
OPEN
IDE_LED#
D60
R563
150_5%
C1050
OPEN
R1017
200_5%_OPEN
DCIN_BLED#
D58
R561
150_5%
C1051
OPEN
R1018
200_5%_OPEN
CN34
SCAN_OUT(4)
SCAN_IN(0)
SCAN_IN(7)
SCAN_IN(3)
SCAN_IN(4)
SCAN_IN(5)
SCAN_IN(1)
MACHINE_ID0_DB
MACHINE_ID1_DB
ACES_88706_1201_12P
PWRBTN_LED#
U72
TC7SET08FU
PWR_SWIN#_3
R1033
OPEN
R1032
150_5%
ACES_87213_0400N_4P
CN42
D107
EZJZ0V120JA_OPEN
R2971
10K_5%
CN2002
HOTKEY_INT#
HOTKEY_DATA
HOTKEY_CLK
ACES_88766_060N_6P
INVENTEC
TITLE
07A99 Preliminary Test
LED
SIZE A3
CODE CS
DOC. NUMBER
REV
SHEET 58 OF 63
CHANGE by KOBE
24-Aug-2007

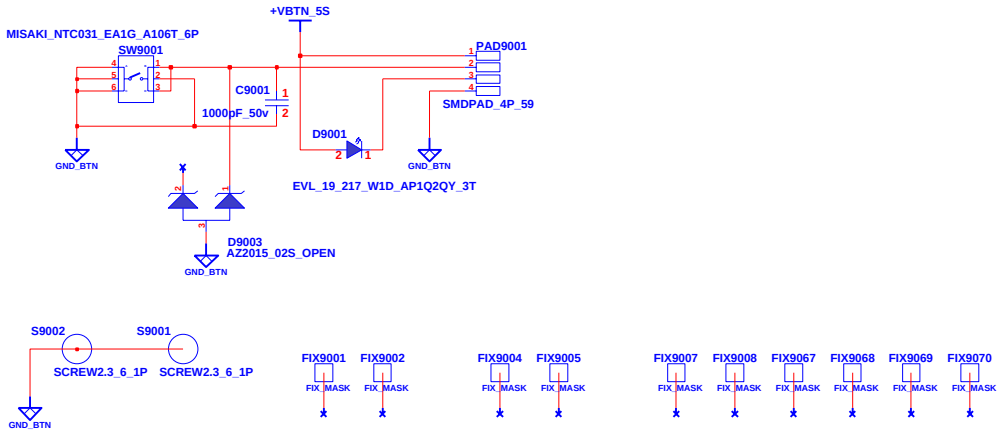

POWER BOARD

CHANGE by	KOBE	22-Oct-2007	

INVENTEC

TITLE
07A99 Preliminary Test
TOUCH PAD BOARD

SIZE	CODE	DOC. NUMBER	REV
A3	CS		

SHEET 59 OF 63

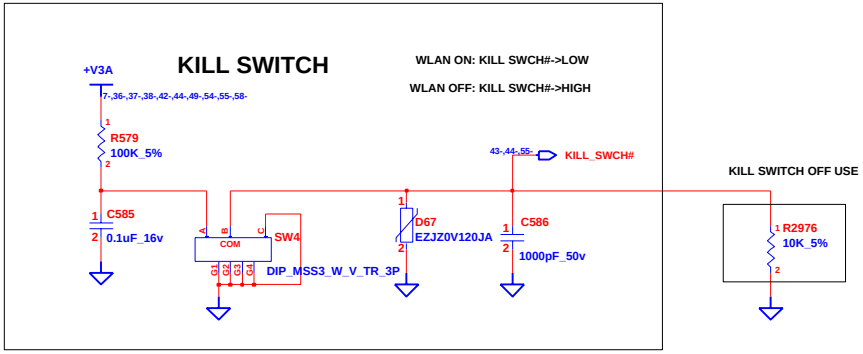

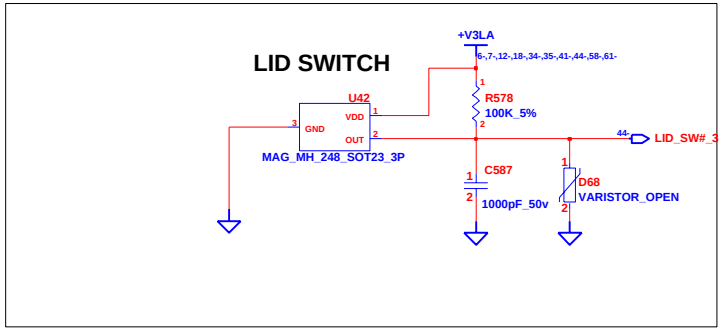

CHANGE by	KOBE	24-Aug-2007	

INVENTEC

TITLE: 07A99 Preliminary Test
LID&KILL SWITCH

SIZE	CODE	DOC. NUMBER	REV
A3	CS		

SHEET 60 OF 63

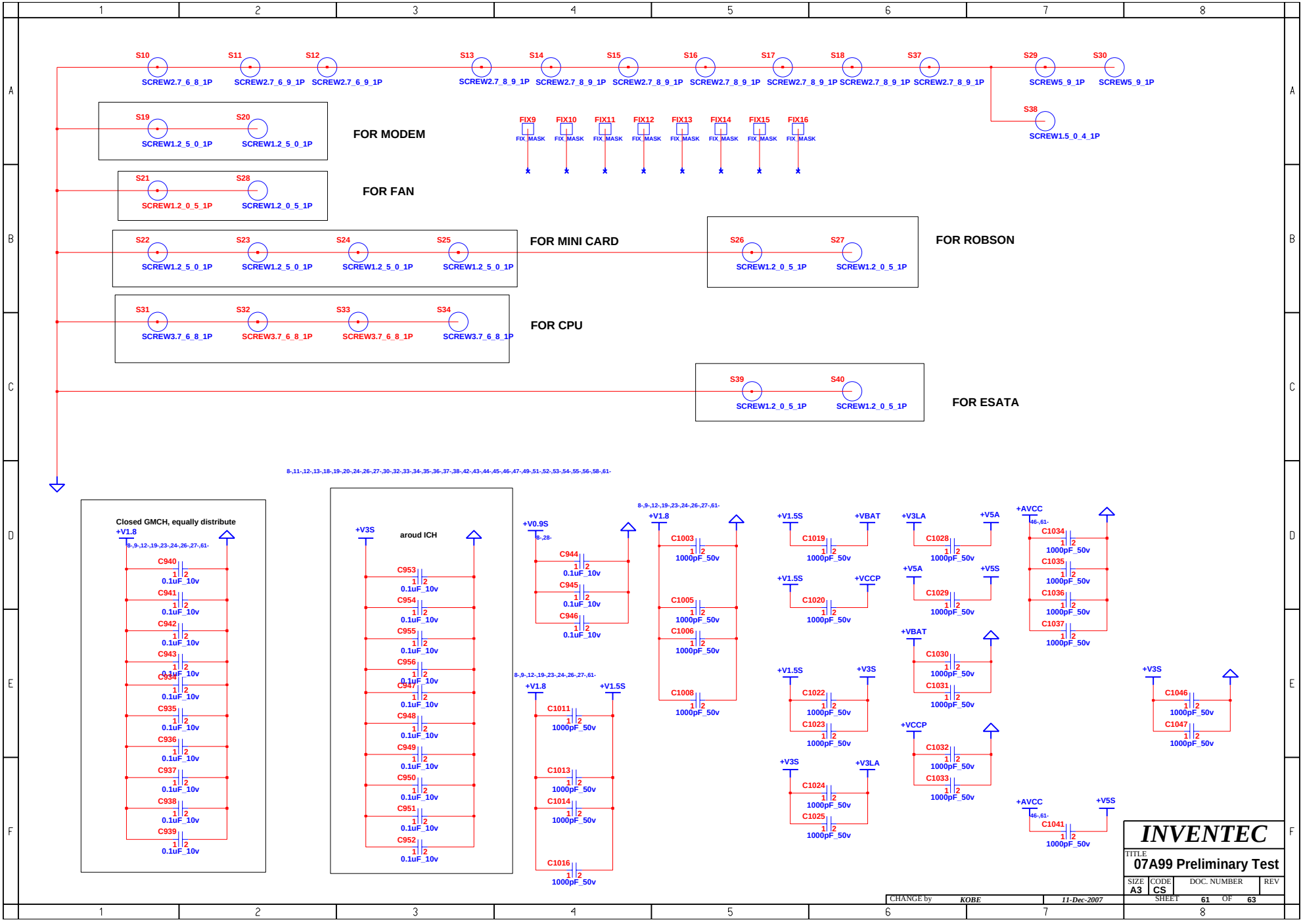
S10 SCREW2.7_6_8_1P
S11 SCREW2.7_6_9_1P
S12 SCREW2.7_6_9_1P
S13 SCREW2.7_8_9_1P
S14 SCREW2.7_8_9_1P
S15 SCREW2.7_8_9_1P
S16 SCREW2.7_8_9_1P
S17 SCREW2.7_8_9_1P
S18 SCREW2.7_8_9_1P
S37 SCREW2.7_8_9_1P
S29 SCREW5_9_1P
S30 SCREW5_9_1P
S38 SCREW1.5_0_4_1P
FIX9 FIX_MASK
FIX10 FIX_MASK
FIX11 FIX_MASK
FIX12 FIX_MASK
FIX13 FIX_MASK
FIX14 FIX_MASK
FIX15 FIX_MASK
FIX16 FIX_MASK
FOR MODEM
S19 SCREW1.2_5_0_1P
S20 SCREW1.2_5_0_1P
FOR FAN
S21 SCREW1.2_0_5_1P
S28 SCREW1.2_0_5_1P
FOR MINI CARD
S22 SCREW1.2_5_0_1P
S23 SCREW1.2_5_0_1P
S24 SCREW1.2_5_0_1P
S25 SCREW1.2_5_0_1P
FOR ROBSON
S26 SCREW1.2_0_5_1P
S27 SCREW1.2_0_5_1P
FOR CPU
S31 SCREW3.7_6_8_1P
S32 SCREW3.7_6_8_1P
S33 SCREW3.7_6_8_1P
S34 SCREW3.7_6_8_1P
FOR ESATA
S39 SCREW1.2_0_5_1P
S40 SCREW1.2_0_5_1P
8-,11-,12-,13-,18-,19-,20-,24-,26-,27-,30-,32-,33-,34-,35-,36-,37-,38-,42-,43-,44-,45-,46-,47-,49-,51-,52-,53-,54-,55-,56-,58-,61-
Closed GMCH, equally distribute
+V1.8
8-,9-,12-,19-,23-,24-,26-,27-,61-
C940 0.1uF_10v
C941 0.1uF_10v
C942 0.1uF_10v
C943 0.1uF_10v
C934 0.1uF_10v
C935 0.1uF_10v
C936 0.1uF_10v
C937 0.1uF_10v
C938 0.1uF_10v
C939 0.1uF_10v
+V3S
aroud ICH
C953 0.1uF_10v
C954 0.1uF_10v
C955 0.1uF_10v
C956 0.1uF_10v
C947 0.1uF_10v
C948 0.1uF_10v
C949 0.1uF_10v
C950 0.1uF_10v
C951 0.1uF_10v
C952 0.1uF_10v
+V0.9S
6-,28-
C944 0.1uF_10v
C945 0.1uF_10v
C946 0.1uF_10v
8-,9-,12-,19-,23-,24-,26-,27-,61-
+V1.8
+V1.5S
C1011 1000pF_50v
C1013 1000pF_50v
C1014 1000pF_50v
C1016 1000pF_50v
8-,9-,12-,19-,23-,24-,26-,27-,61-
+V1.8
C1003 1000pF_50v
C1005 1000pF_50v
C1006 1000pF_50v
C1008 1000pF_50v
+V1.5S
+VBAT
C1019 1000pF_50v
+V1.5S
+VCCP
C1020 1000pF_50v
+V1.5S
+V3S
C1022 1000pF_50v
C1023 1000pF_50v
+V3S
+V3LA
C1024 1000pF_50v
C1025 1000pF_50v
+V3LA
+V5A
C1028 1000pF_50v
+V5A
+V5S
C1029 1000pF_50v
+VBAT
C1030 1000pF_50v
C1031 1000pF_50v
+VCCP
C1032 1000pF_50v
C1033 1000pF_50v
+AVCC
46-,61-
C1034 1000pF_50v
C1035 1000pF_50v
C1036 1000pF_50v
C1037 1000pF_50v
+V3S
C1046 1000pF_50v
C1047 1000pF_50v
+AVCC
46-,61-
+V5S
C1041 1000pF_50v
INVENTEC
TITLE
07A99 Preliminary Test
SIZE A3
CODE CS
DOC. NUMBER
REV
SHEET 61 OF 63
CHANGE by KOBE
11-Dec-2007

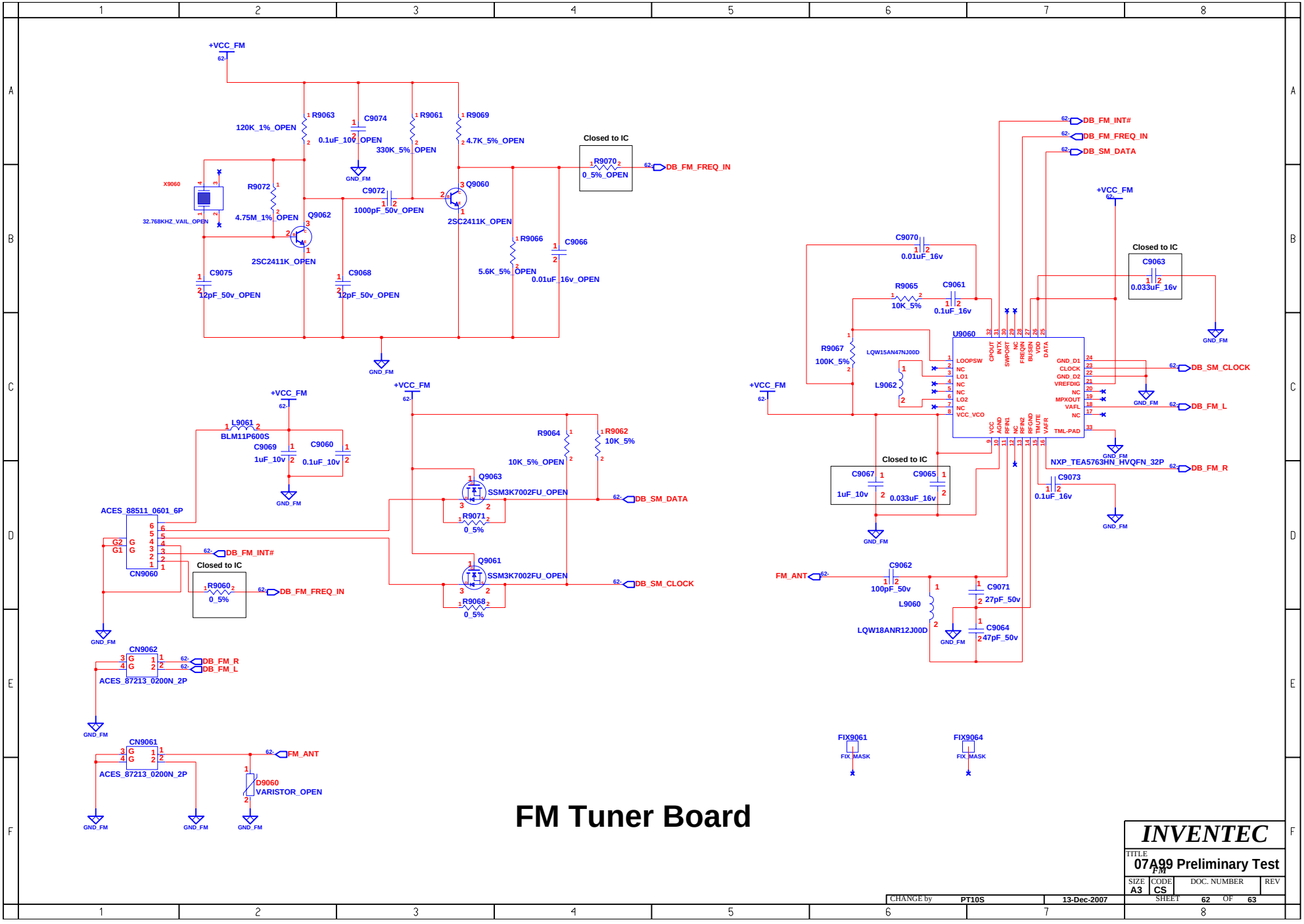

FM Tuner Board

INVENTEC

TITLE: 07A99 FM Preliminary Test

SIZE	CODE	DOC. NUMBER	REV
A3	CS		

CHANGE by PT10S 13-Dec-2007

SHEET 62 OF 63

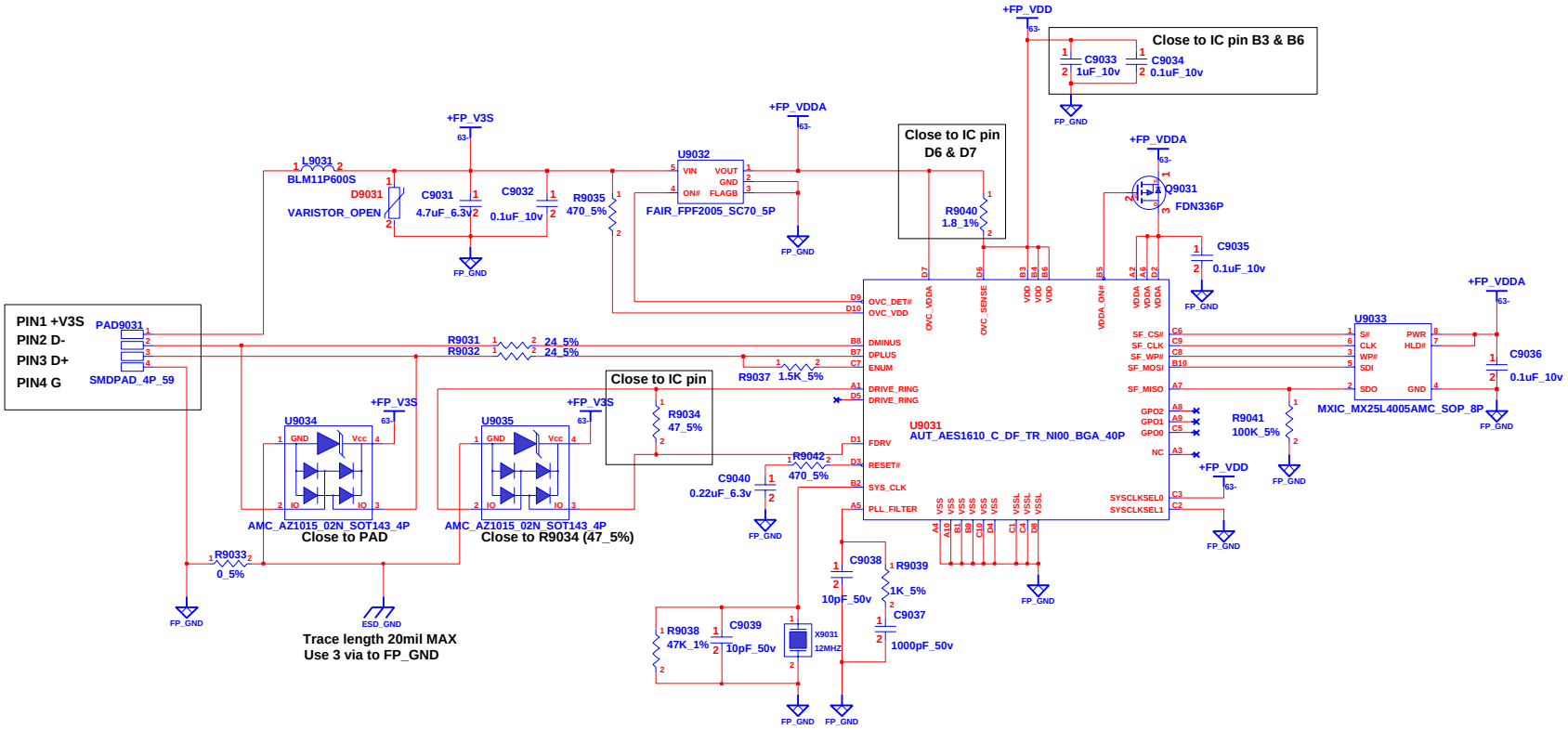

Finger Print Reader DB

INVENTEC			
TITLE 07A99 Preliminary Test FINGER			
SIZE A3	CODE CS	DOC. NUMBER	REV
CHANGE by PT10S	23-Jan-2008	SHEET 63 OF 63	