NWQAA

Marseille 10

LA-6061P REV 2.0 Schematic

Intel Processor(ARD) /PCH(HM55)

2010-03-24 Rev 2.0

Security Classification	Compal Secret Data			Compal Electronics, Inc.
Issued Date	2009/10/05	Deciphered Date	2010/01/23	Title: Cover Page
				Size: B / Document Number: NWQAA LA6061P M/B / Rev: 2.0
				Date: Wednesday, March 24, 2010 / Sheet 1 of 45

THIS SHEET OF ENGINEERING DRAWING IS THE PROPRIETARY PROPERTY OF COMPAL ELECTRONICS, INC. AND CONTAINS CONFIDENTIAL AND TRADE SECRET INFORMATION. THIS SHEET MAY NOT BE TRANSFERED FROM THE CUSTODY OF THE COMPETENT DIVISION OF R&D DEPARTMENT EXCEPT AS AUTHORIZED BY COMPAL ELECTRONICS, INC. NEITHER THIS SHEET NOR THE INFORMATION IT CONTAINS MAY BE USED BY OR DISCLOSED TO ANY THIRD PARTY WITHOUT PRIOR WRITTEN CONSENT OF COMPAL ELECTRONICS, INC.

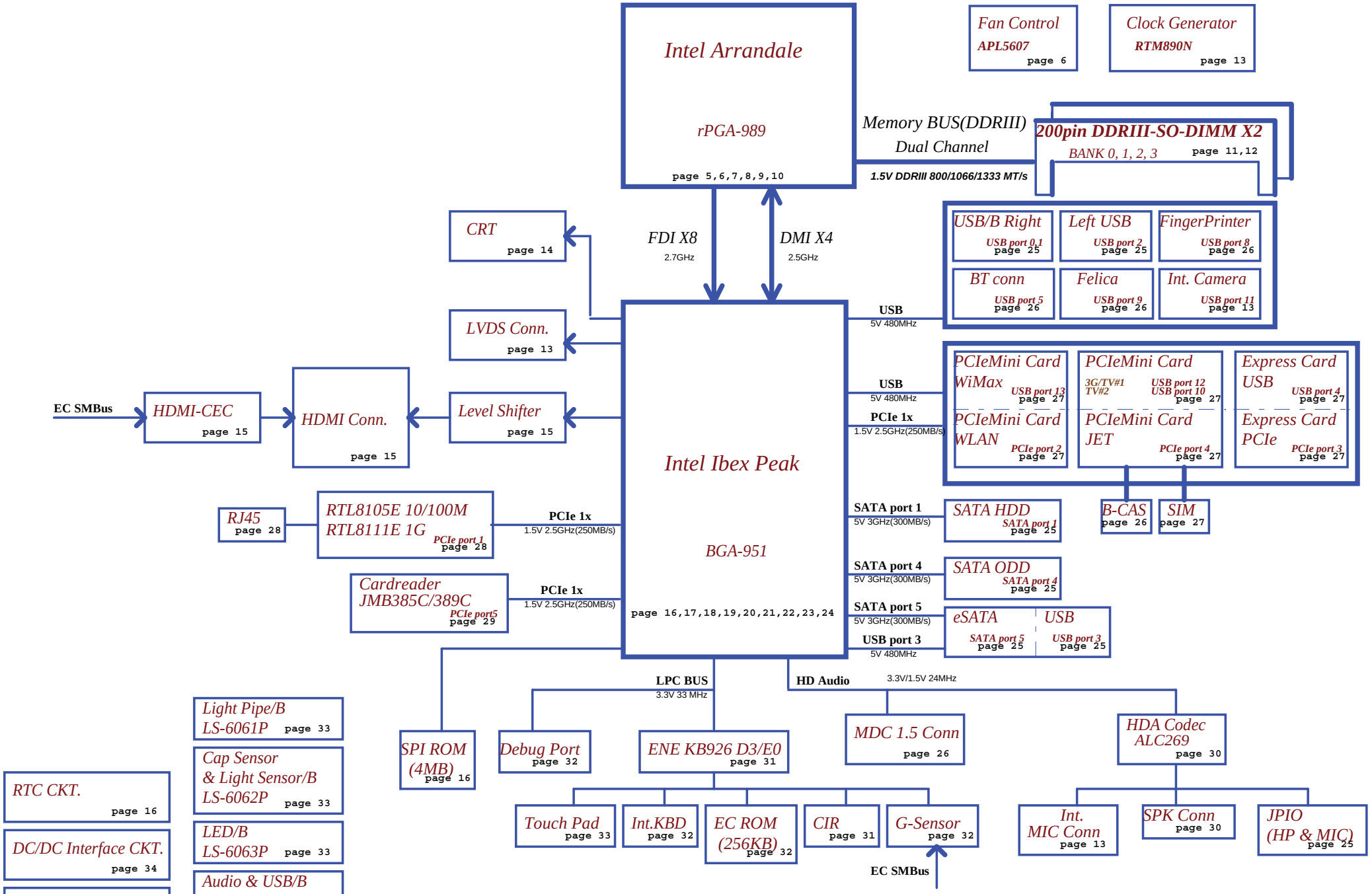

Security Classification	Compal Secret Data		
Issued Date	2009/10/05	Deciphered Date	2010/01/23

THIS SHEET OF ENGINEERING DRAWING IS THE PROPRIETARY PROPERTY OF COMPAL ELECTRONICS, INC. AND CONTAINS CONFIDENTIAL AND TRADE SECRET INFORMATION. THIS SHEET MAY NOT BE TRANSFERED FROM THE CUSTODY OF THE COMPETENT DIVISION OF R&D DEPARTMENT EXCEPT AS AUTHORIZED BY COMPAL ELECTRONICS, INC. NEITHER THIS SHEET NOR THE INFORMATION IT CONTAINS MAY BE USED BY OR DISCLOSED TO ANY THIRD PARTY WITHOUT PRIOR WRITTEN CONSENT OF COMPAL ELECTRONICS, INC.

Compal Electronics, Inc.

Title: Block Diagrams

Size | Document Number: NWQAA LA6061P M/B | Rev 2.0

Date: Tuesday, March 23, 2010 | Sheet 2 of 45

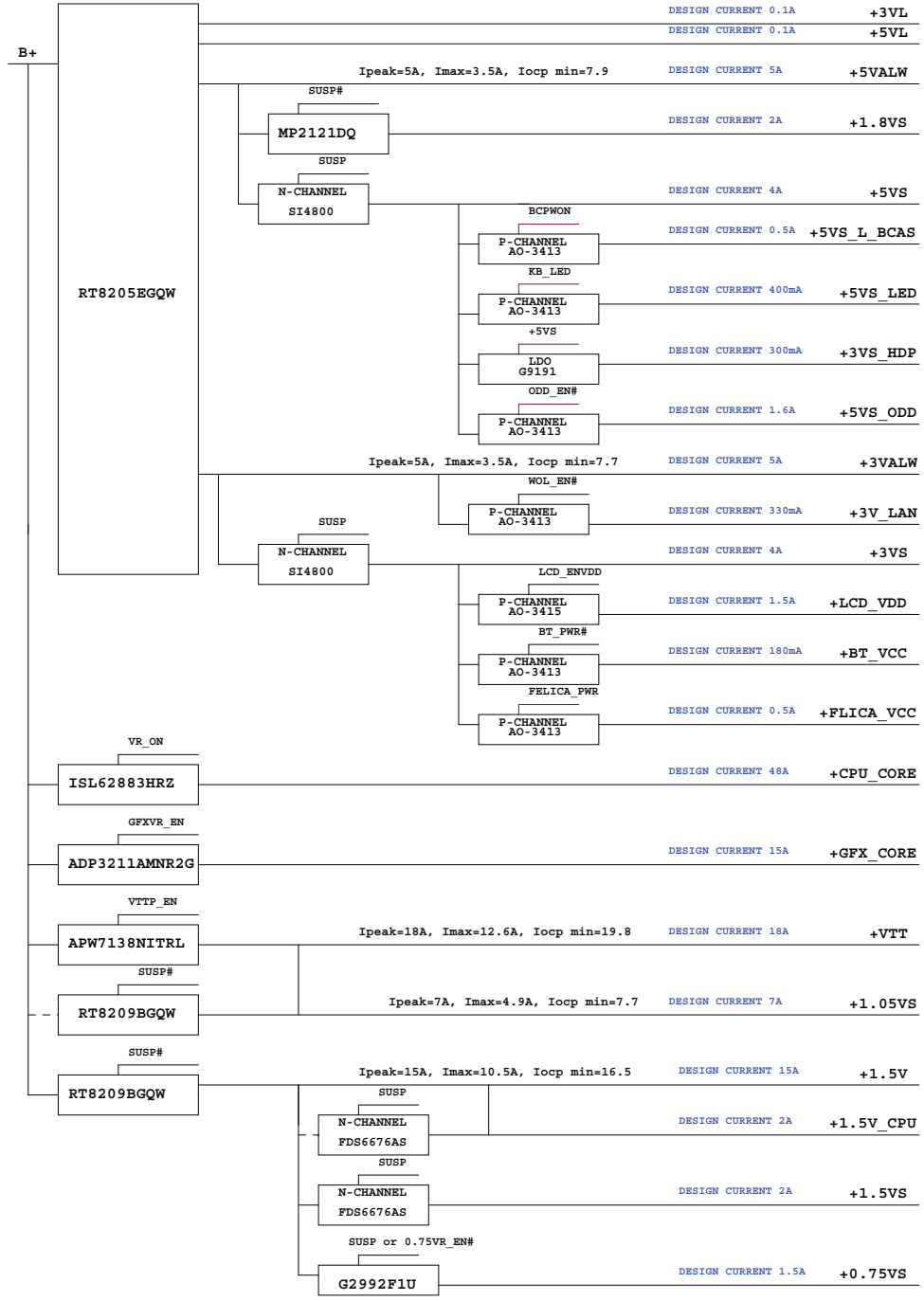

Security Classification	Compal Secret Data		
Issued Date	2009/10/05	Deciphered Date	2010/01/23

THIS SHEET OF ENGINEERING DRAWING IS THE PROPRIETARY PROPERTY OF COMPAL ELECTRONICS, INC. AND CONTAINS CONFIDENTIAL AND TRADE SECRET INFORMATION. THIS SHEET MAY NOT BE TRANSFERED FROM THE CUSTODY OF THE COMPETENT DIVISION OF R&D DEPARTMENT EXCEPT AS AUTHORIZED BY COMPAL ELECTRONICS, INC. NEITHER THIS SHEET NOR THE INFORMATION IT CONTAINS MAY BE USED BY OR DISCLOSED TO ANY THIRD PARTY WITHOUT PRIOR WRITTEN CONSENT OF COMPAL ELECTRONICS, INC.

Compal Electronics, Inc.

Title: **Power Tree**

Size | Document Number: NWQAA LA6061P M/B | Rev: 2.0

Date: Tuesday, March 23, 2010 | Sheet 3 of 45

Voltage Rails

(O MEANS ON X MEANS OFF)

power plane / State	+RTCVCC	+B	+5VL +3VL	+5VALW +3VALW +VSB	+1.5V	+5VS +3VS +1.5VS +VGA_CORE +CPU_CORE +VTT +1.05VS +1.8VS +1.1VS +0.75VS
S0	O	O	O	O	O	O
S1	O	O	O	O	O	O
S3	O	O	O	O	O	X
S5 S4/AC	O	O	O	O	X	X
S5 S4/ Battery only	O	O	O	X	X	X
S5 S4/AC & Battery don't exist	O	X	X	X	X	X

BTO Option Table

Function	MINI PCI-E SLOT			LAN		Fingerprint	Modem	CIR	KB Light
description	SLOT2		SLOT1	LAN		Fingerprint	Modem	CIR	KB Light
explain	3G	TV Tuner	WIMAX	10/100M	Giga	Fingerprint	Modem	CIR	KB Light
BTO	3G@	TV@	WIMAX@	8105E@	8111E@	FP@	MDC@	CIR@	KBL@

Function	Felica	BLUE TOOTH	G-SENSOR	Camera & Mic	HDMI		Card reader	
description	Felica	BLUE TOOTH	G-SENSOR	Camera & Mic	HDMI		JMB385C/389C	
explain	Felica	BLUE TOOTH	G-SENSOR	Camera & Mic	UMA	CEC	JMB385C	JMB389C
BTO	FELICA@	BT@	GSENSOR@	CAM@	IHDMI@	CEC@	JMB385@	JMB389@

Function	S3 Power Saving		New Card
description	S3 Power Saving		New Card
explain	No Power Saving	Power Saving	New Card
BTO	NOPS@	PS@	NEW@

PCH SM Bus Address

Power	Device	HEX	Address
+3VS	DDR SO-DIMM 0	A0 H	1010 0000 b
+3VS	DDR SO-DIMM 1	A4 H	1010 0100 b
+3VS	Clock Generator	D2 H	1101 0010 b
+3VS	New Card		
+3VS	WLAN/WIMAX		
+3VS	Clock Generator		
+3VS	3G		

STATE \ SIGNAL	SLP_S3#	SLP_S4#	SLP_S5#
Full ON	HIGH	HIGH	HIGH
S1(Power On Suspend)	HIGH	HIGH	HIGH
S3 (Suspend to RAM)	LOW	HIGH	HIGH
S4 (Suspend to Disk)	LOW	LOW	HIGH
S5 (Soft OFF)	LOW	LOW	LOW
G3	LOW	LOW	LOW

EC SM Bus1 Address

Power	Device	HEX	Address
+3VL	Smart Battery	16 H	0001 0110 b
+3VL	HDMI-CEC	34 H	0011 0100 b

Power	Device	HEX	Address
+3VL	Cap. Sensor		Virtual I2C

EC SM Bus2 Address

Power	Device	HEX	Address
+3VS	PCH	96 H	1001 0110 b
+3VS	G-Sensor	40 H	0100 0000 b
+3VS	Light Sensor	52 H	0101 0010 b

Security Classification	Compal Secret Data		
Issued Date	2009/10/05	Deciphered Date	2010/01/23

THIS SHEET OF ENGINEERING DRAWING IS THE PROPRIETARY PROPERTY OF COMPAL ELECTRONICS, INC. AND CONTAINS CONFIDENTIAL AND TRADE SECRET INFORMATION. THIS SHEET MAY NOT BE TRANSFERED FROM THE CUSTODY OF THE COMPETENT DIVISION OF R&D DEPARTMENT EXCEPT AS AUTHORIZED BY COMPAL ELECTRONICS, INC. NEITHER THIS SHEET NOR THE INFORMATION IT CONTAINS MAY BE USED BY OR DISCLOSED TO ANY THIRD PARTY WITHOUT PRIOR WRITTEN CONSENT OF COMPAL ELECTRONICS, INC.

Compal Electronics, Inc.

Title: **Notes List**

Size: Custom | Document Number: **NWQAA LA6061P M/B** | Rev: 2.0

Date: Tuesday, March 23, 2010 | Sheet 4 of 45

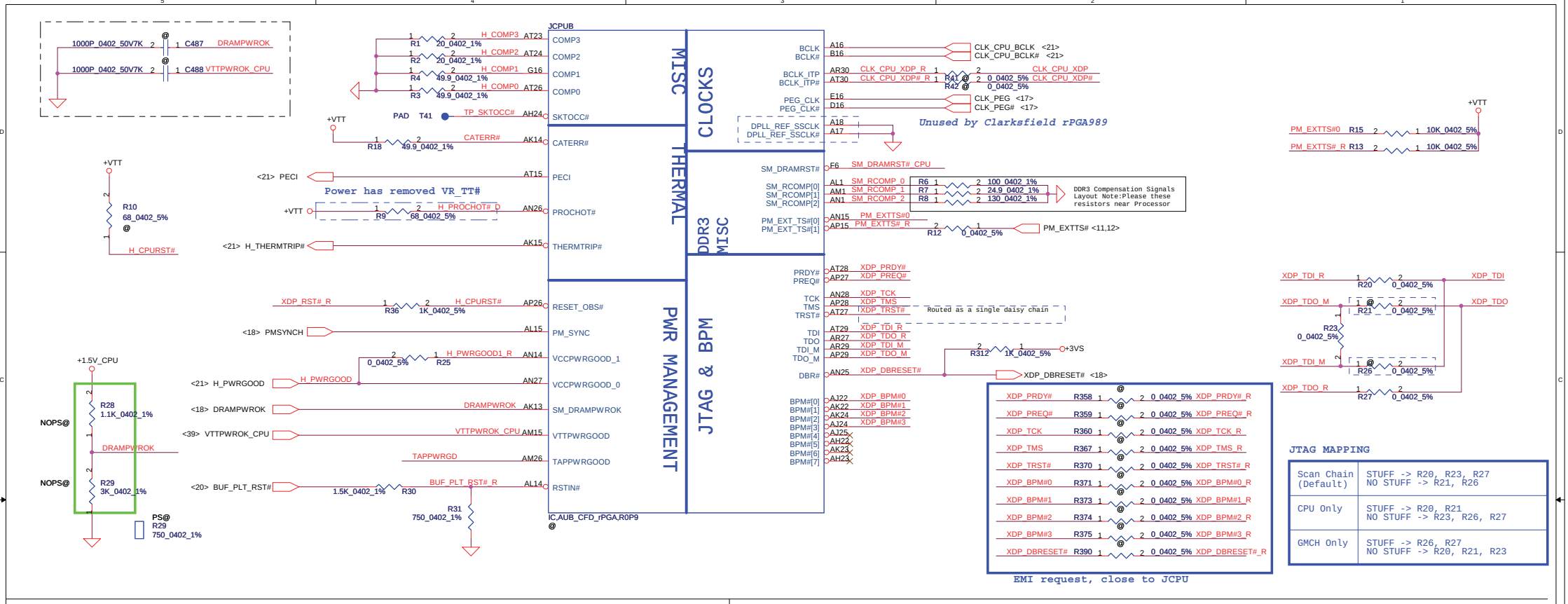

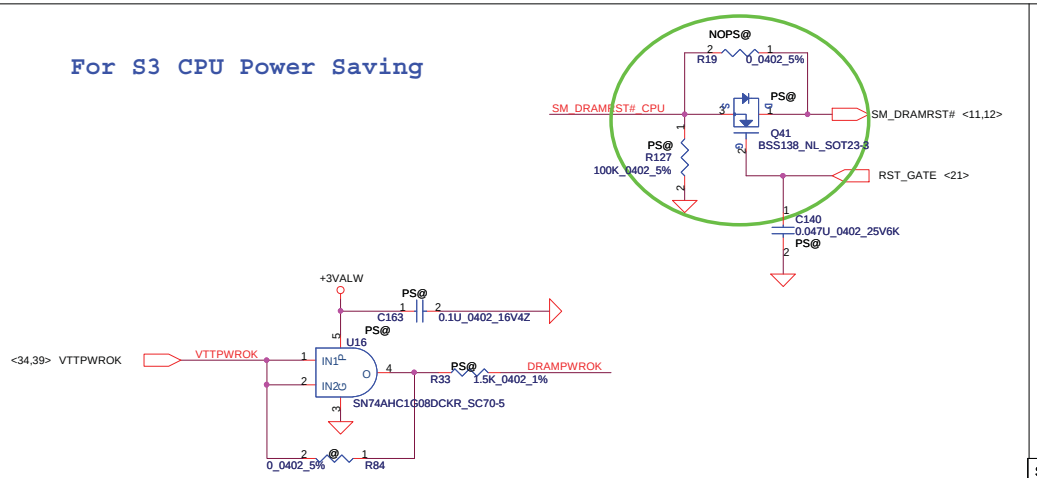

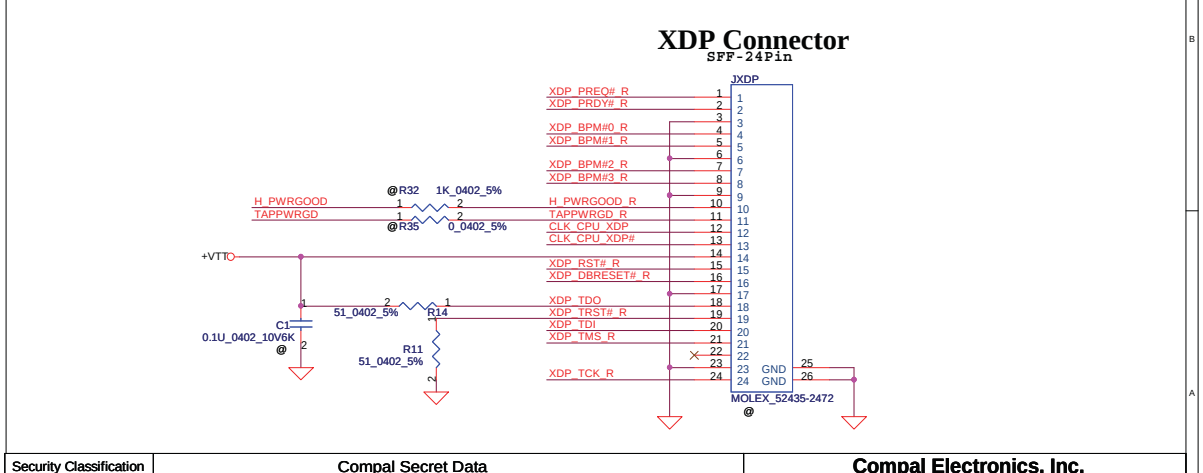

Security Classification	Compal Secret Data		
Issued Date	2009/10/05	Deciphered Date	2010/01/23

THIS SHEET OF ENGINEERING DRAWING IS THE PROPRIETARY PROPERTY OF COMPAL ELECTRONICS, INC. AND CONTAINS CONFIDENTIAL AND TRADE SECRET INFORMATION. THIS SHEET MAY NOT BE TRANSFERED FROM THE CUSTODY OF THE COMPETENT DIVISION OF R&D DEPARTMENT EXCEPT AS AUTHORIZED BY COMPAL ELECTRONICS, INC. NEITHER THIS SHEET NOR THE INFORMATION IT CONTAINS MAY BE USED BY OR DISCLOSED TO ANY THIRD PARTY WITHOUT PRIOR WRITTEN CONSENT OF COMPAL ELECTRONICS, INC.

Compal Electronics, Inc.

Title: CPU CLK/MISC/JTAG

Size: Custom | Document Number: NWQAA LA6061P M/B | Rev: 2.0

Date: Wednesday, March 24, 2010 | Sheet 5 of 45

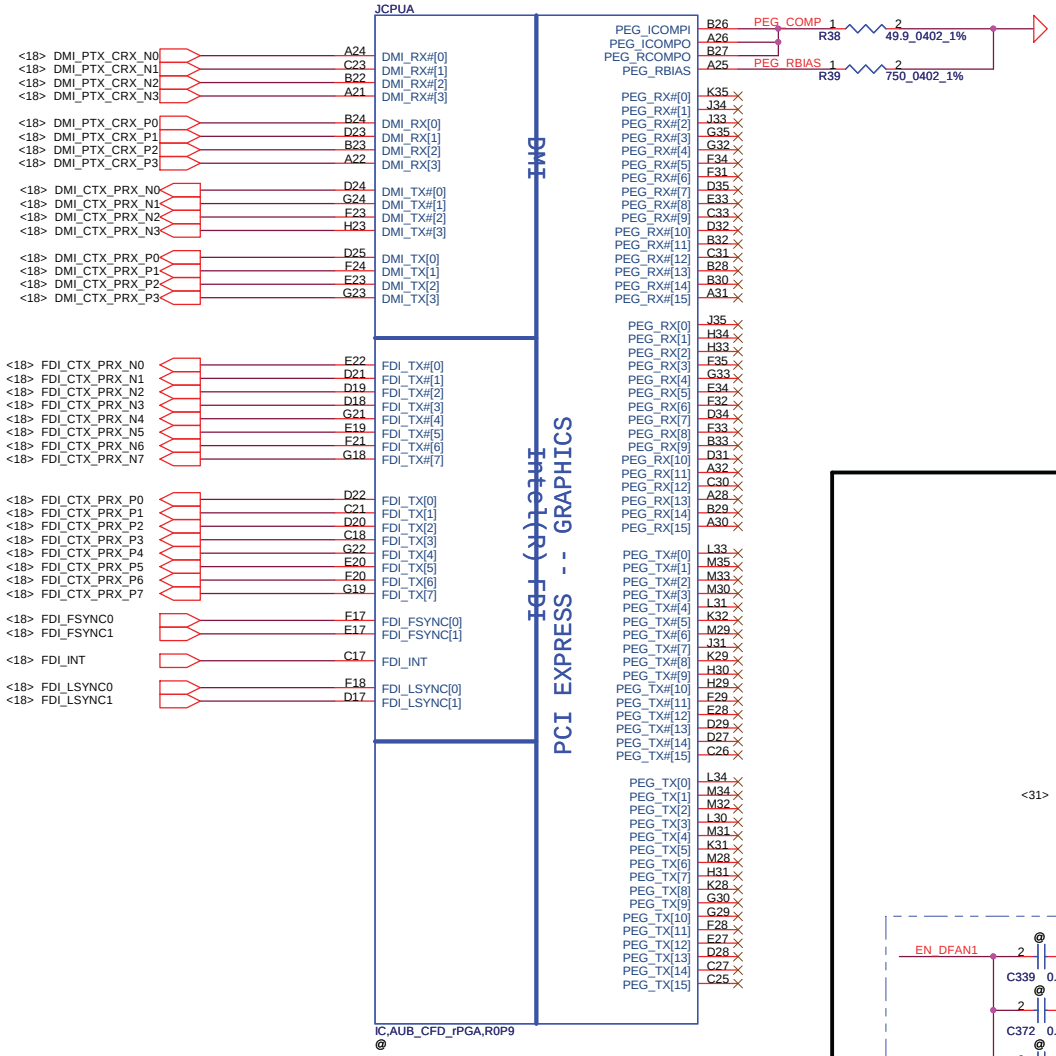

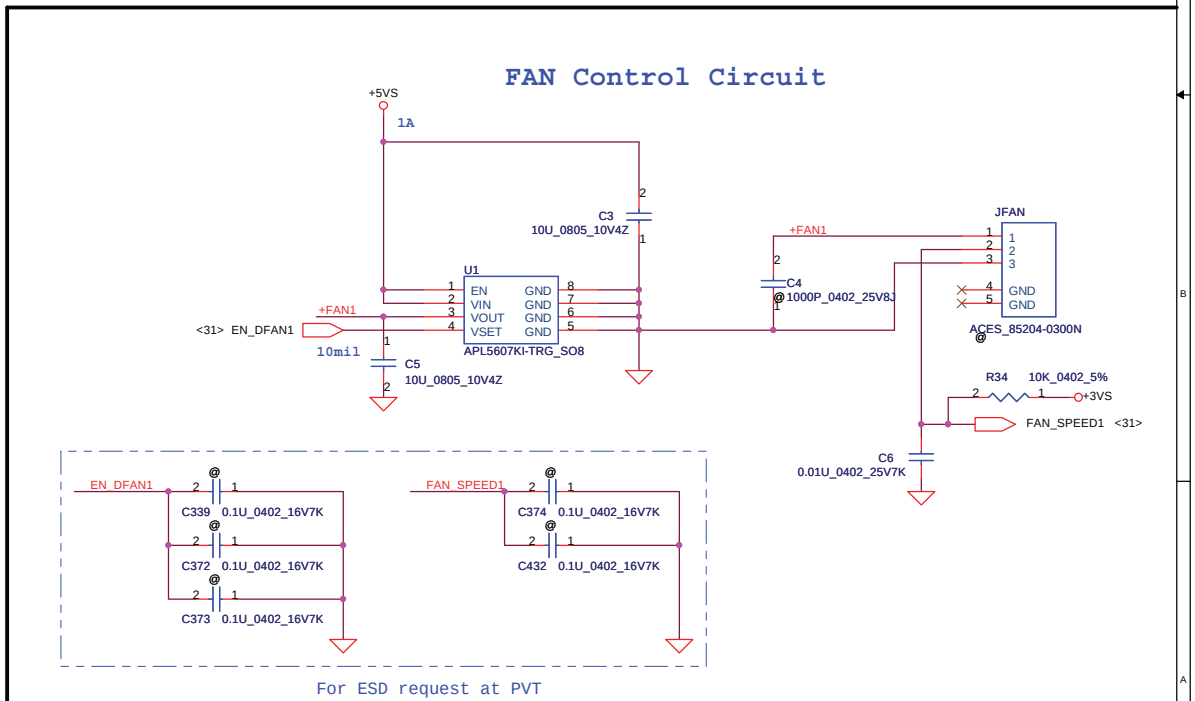

Security Classification	Compal Secret Data		
Issued Date	2009/10/05	Deciphered Date	2010/01/23

THIS SHEET OF ENGINEERING DRAWING IS THE PROPRIETARY PROPERTY OF COMPAL ELECTRONICS, INC. AND CONTAINS CONFIDENTIAL AND TRADE SECRET INFORMATION. THIS SHEET MAY NOT BE TRANSFERED FROM THE CUSTODY OF THE COMPETENT DIVISION OF R&D DEPARTMENT EXCEPT AS AUTHORIZED BY COMPAL ELECTRONICS, INC. NEITHER THIS SHEET NOR THE INFORMATION IT CONTAINS MAY BE USED BY OR DISCLOSED TO ANY THIRD PARTY WITHOUT PRIOR WRITTEN CONSENT OF COMPAL ELECTRONICS, INC.

Compal Electronics, Inc.

Title: **CPU DMI/FDI/PEG**

Size: B | Document Number: **NWQAA LA6061P M/B** | Rev: 2.0

Date: Wednesday, March 24, 2010 | Sheet 6 of 45

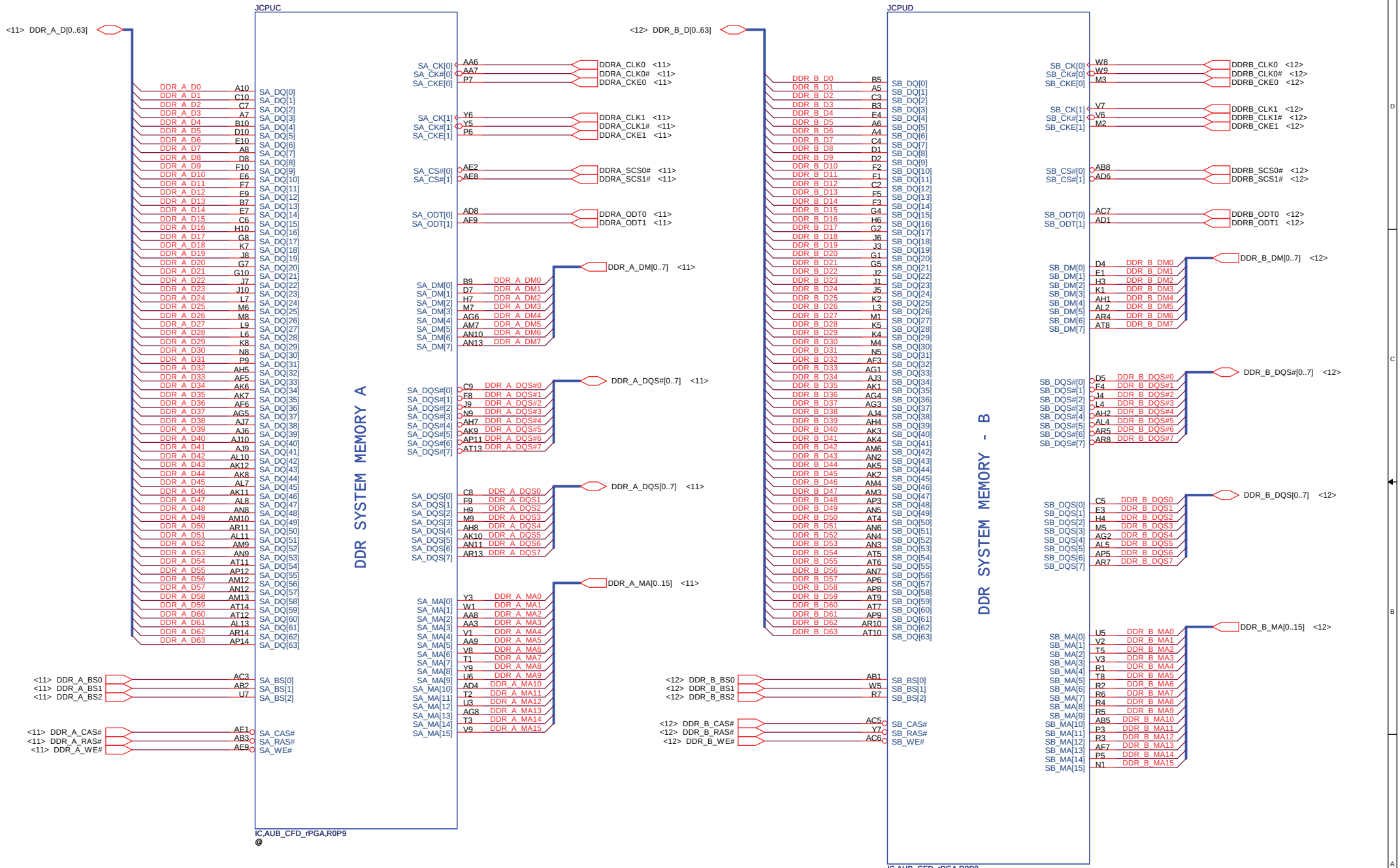

Security Classification	Compal Secret Data			Compal Electronics, Inc.
Issued Date	2009/10/05	Deciphered Date	2010/01/23	Title: CPU DDRIII
				Size: B; Document Number: NWQAA LA6061P M/B; Rev: 2.0
				Date: Wednesday, March 24, 2010; Sheet 7 of 45

THIS SHEET OF ENGINEERING DRAWING IS THE PROPRIETARY PROPERTY OF COMPAL ELECTRONICS, INC. AND CONTAINS CONFIDENTIAL AND TRADE SECRET INFORMATION. THIS SHEET MAY NOT BE TRANSFERED FROM THE CUSTODY OF THE COMPETENT DIVISION OF R&D DEPARTMENT EXCEPT AS AUTHORIZED BY COMPAL ELECTRONICS, INC. NEITHER THIS SHEET NOR THE INFORMATION IT CONTAINS MAY BE USED BY OR DISCLOSED TO ANY THIRD PARTY WITHOUT PRIOR WRITTEN CONSENT OF COMPAL ELECTRONICS, INC.

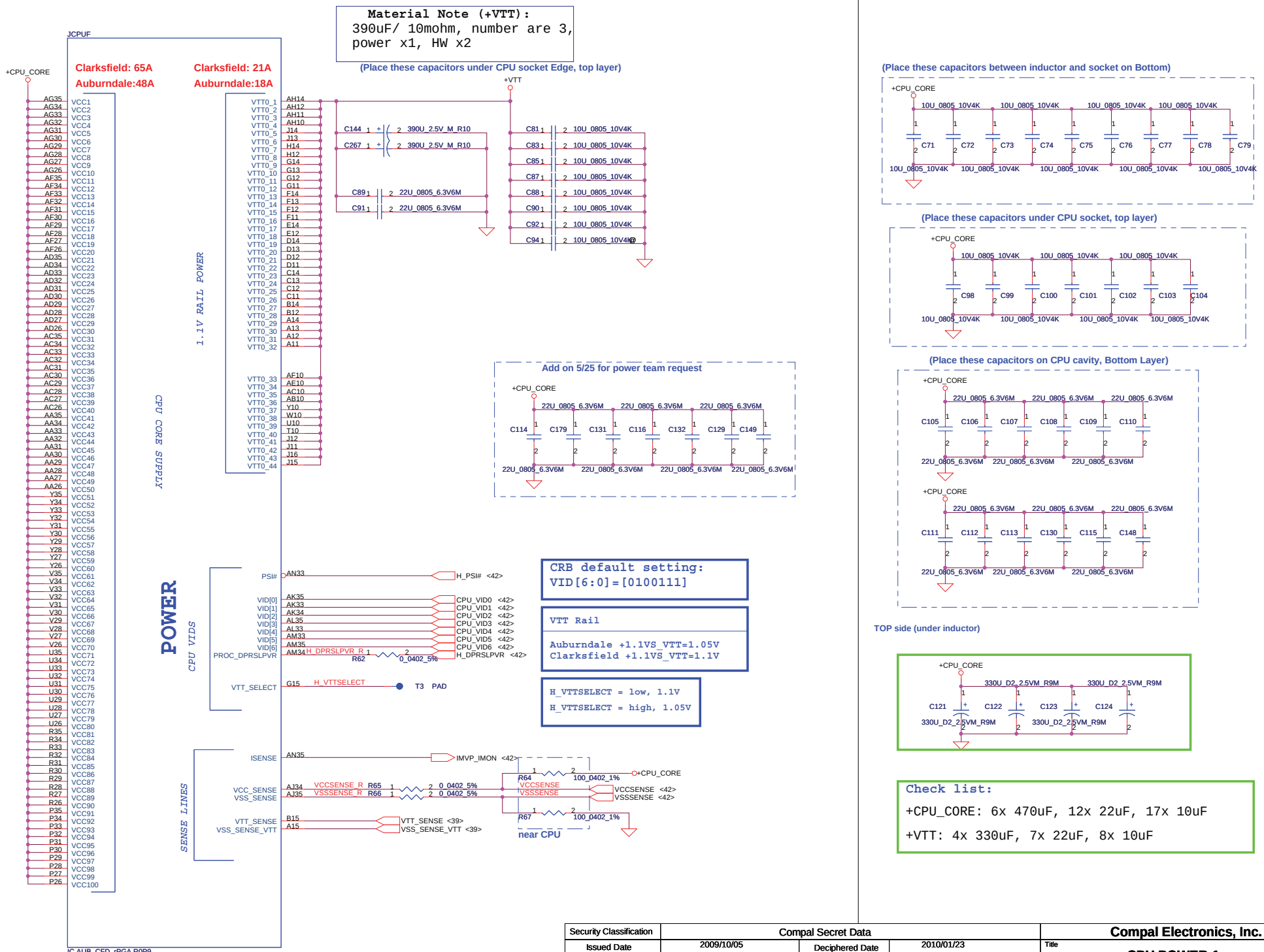

Security Classification	Compal Secret Data			Compal Electronics, Inc.
Issued Date	2009/10/05	Deciphered Date	2010/01/23	Title: CPU POWER-1
				Size: Custom; Document Number: NWQAA LA6061P M/B; Rev: 2.0
				Date: Wednesday, March 24, 2010; Sheet 8 of 45

THIS SHEET OF ENGINEERING DRAWING IS THE PROPRIETARY PROPERTY OF COMPAL ELECTRONICS, INC. AND CONTAINS CONFIDENTIAL AND TRADE SECRET INFORMATION. THIS SHEET MAY NOT BE TRANSFERED FROM THE CUSTODY OF THE COMPETENT DIVISION OF R&D DEPARTMENT EXCEPT AS AUTHORIZED BY COMPAL ELECTRONICS, INC. NEITHER THIS SHEET NOR THE INFORMATION IT CONTAINS MAY BE USED BY OR DISCLOSED TO ANY THIRD PARTY WITHOUT PRIOR WRITTEN CONSENT OF COMPAL ELECTRONICS, INC.

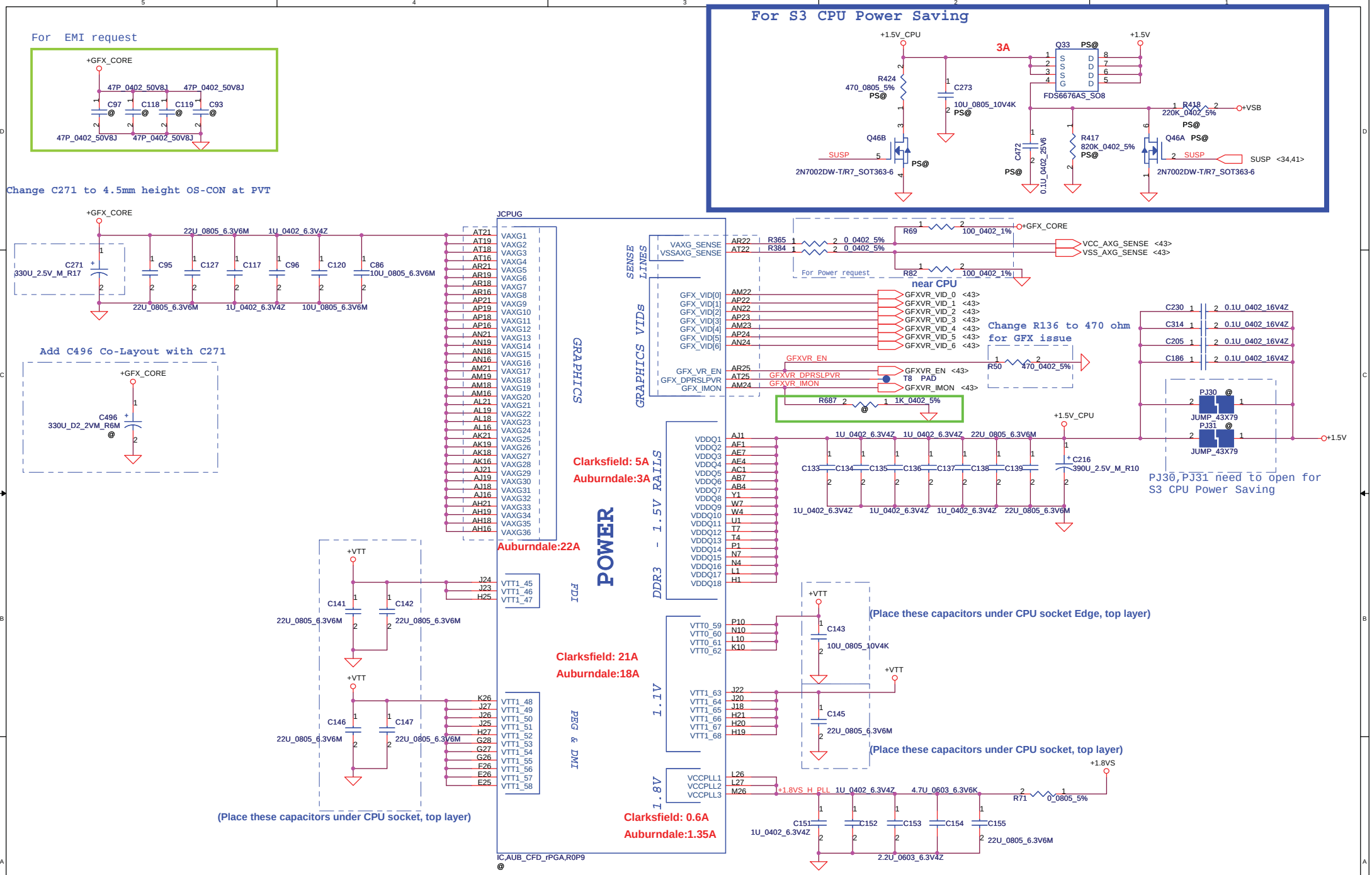

Security Classification	Compal Secret Data		
Issued Date	2009/10/05	Deciphered Date	2010/01/23

THIS SHEET OF ENGINEERING DRAWING IS THE PROPRIETARY PROPERTY OF COMPAL ELECTRONICS, INC. AND CONTAINS CONFIDENTIAL AND TRADE SECRET INFORMATION. THIS SHEET MAY NOT BE TRANSFERED FROM THE CUSTODY OF THE COMPETENT DIVISION OF R&D DEPARTMENT EXCEPT AS AUTHORIZED BY COMPAL ELECTRONICS, INC. NEITHER THIS SHEET NOR THE INFORMATION IT CONTAINS MAY BE USED BY OR DISCLOSED TO ANY THIRD PARTY WITHOUT PRIOR WRITTEN CONSENT OF COMPAL ELECTRONICS, INC.

Compal Electronics, Inc.

Title: **CPU POWER-2**

Size: B | Document Number: **NWQAA LA6061P M/B** | Rev: 2.0

Date: Wednesday, March 24, 2010 | Sheet 9 of 45

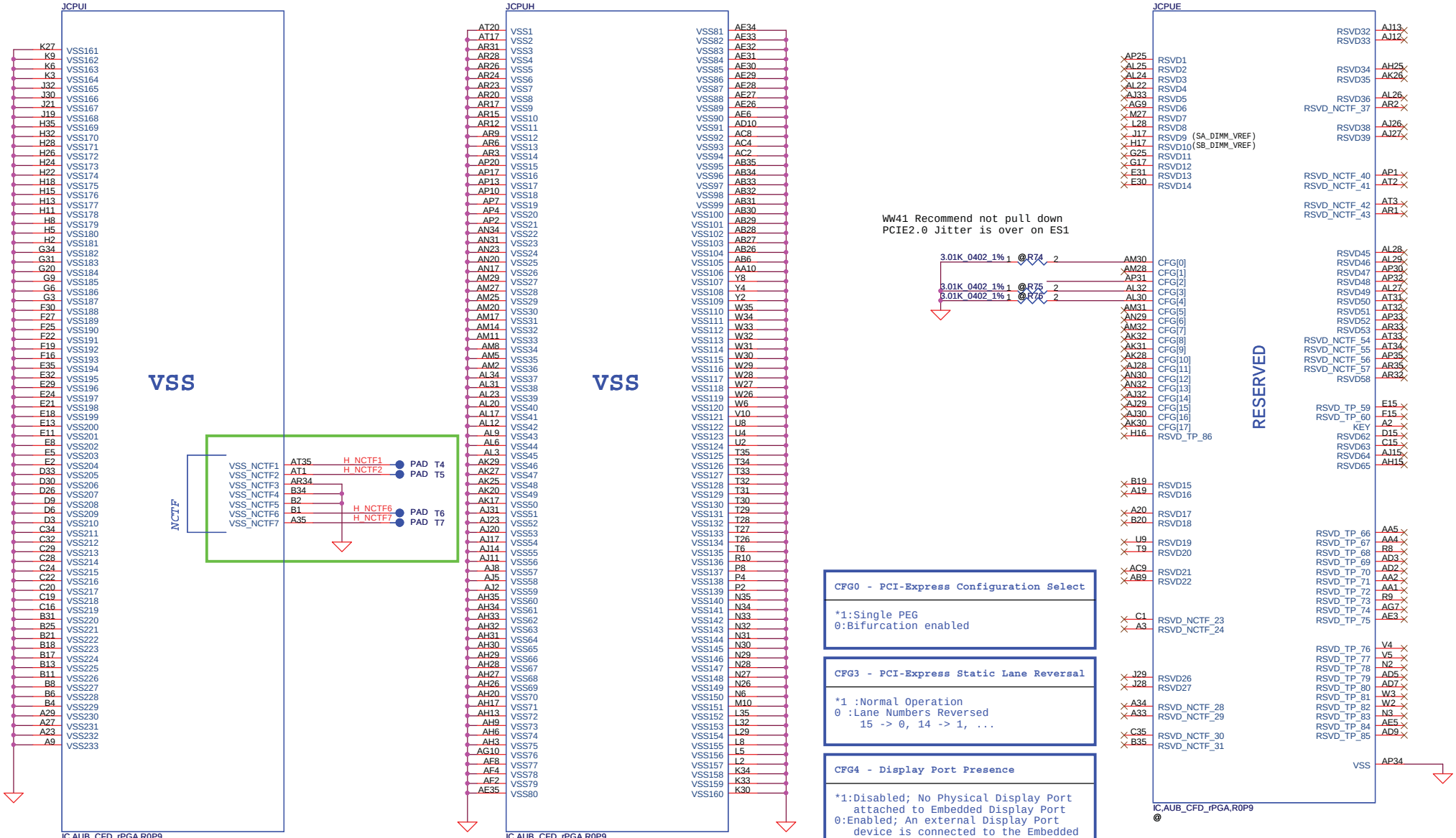

CFG0 - PCI-Express Configuration Select

*1:Single PEG
0:Bifurcation enabled

CFG3 - PCI-Express Static Lane Reversal

*1 :Normal Operation
0 :Lane Numbers Reversed
15 -> 0, 14 -> 1, ...

CFG4 - Display Port Presence

*1:Disabled; No Physical Display Port attached to Embedded Display Port
0:Enabled; An external Display Port device is connected to the Embedded Display Port

*:Default

Security Classification	Compal Secret Data		
Issued Date	2009/10/05	Deciphered Date	2010/01/23

THIS SHEET OF ENGINEERING DRAWING IS THE PROPRIETARY PROPERTY OF COMPAL ELECTRONICS, INC. AND CONTAINS CONFIDENTIAL AND TRADE SECRET INFORMATION. THIS SHEET MAY NOT BE TRANSFERED FROM THE CUSTODY OF THE COMPETENT DIVISION OF R&D DEPARTMENT EXCEPT AS AUTHORIZED BY COMPAL ELECTRONICS, INC. NEITHER THIS SHEET NOR THE INFORMATION IT CONTAINS MAY BE USED BY OR DISCLOSED TO ANY THIRD PARTY WITHOUT PRIOR WRITTEN CONSENT OF COMPAL ELECTRONICS, INC.

Compal Electronics, Inc.

Title: **CPU GND/RESERVED/XDP**

Size: Custom | Document Number: **NWQAA LA6061P M/B** | Rev: 2.0

Date: Tuesday, March 23, 2010 | Sheet 10 of 45

DDR3 SO-DIMM A
Standard Type

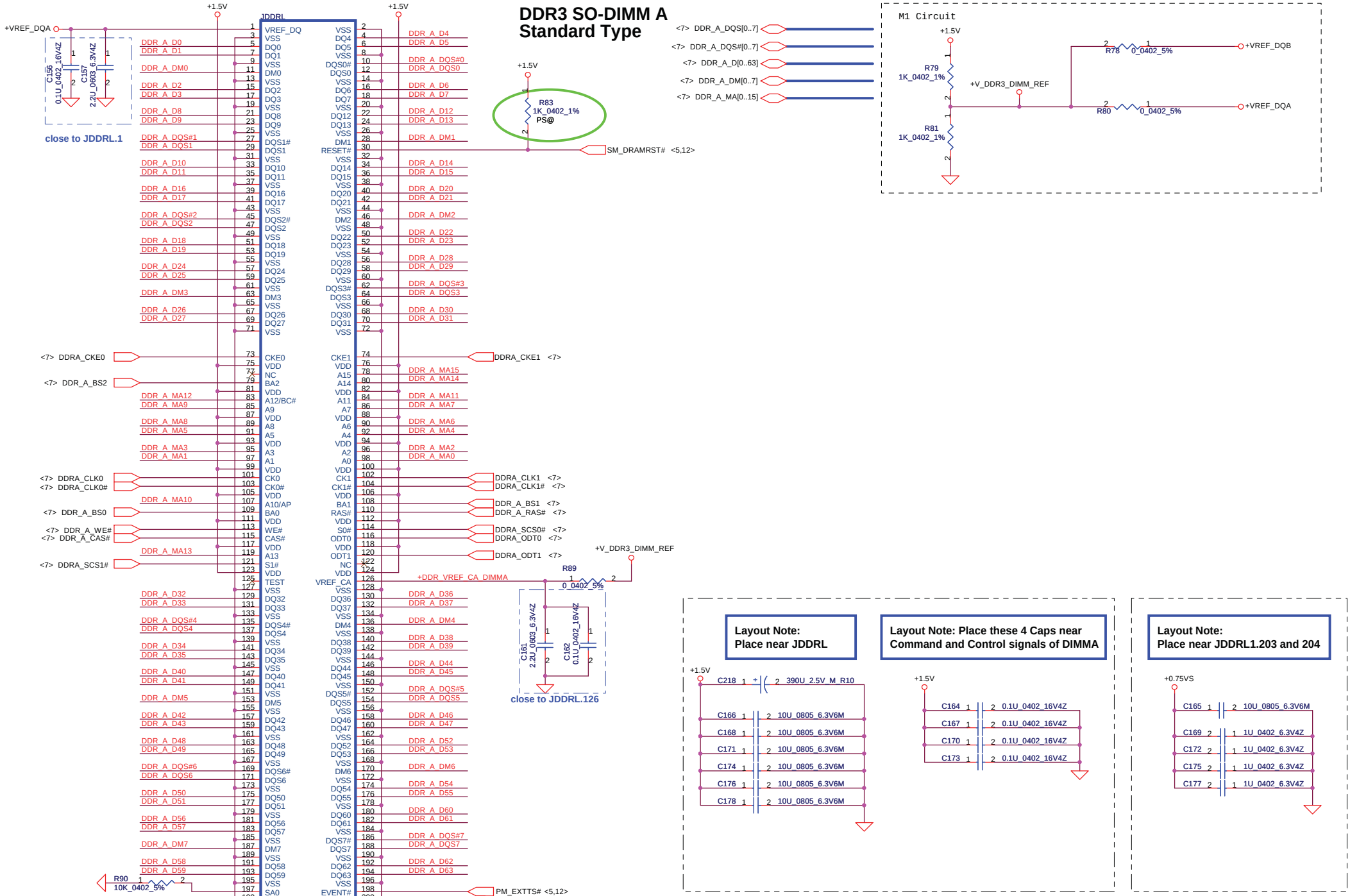

Security Classification	Compal Secret Data		
Issued Date	2009/10/05	Deciphered Date	2010/01/23

THIS SHEET OF ENGINEERING DRAWING IS THE PROPRIETARY PROPERTY OF COMPAL ELECTRONICS, INC. AND CONTAINS CONFIDENTIAL AND TRADE SECRET INFORMATION. THIS SHEET MAY NOT BE TRANSFERED FROM THE CUSTODY OF THE COMPETENT DIVISION OF R&D DEPARTMENT EXCEPT AS AUTHORIZED BY COMPAL ELECTRONICS, INC. NEITHER THIS SHEET NOR THE INFORMATION IT CONTAINS MAY BE USED BY OR DISCLOSED TO ANY THIRD PARTY WITHOUT PRIOR WRITTEN CONSENT OF COMPAL ELECTRONICS, INC.

Compal Electronics, Inc.

Title: **DDRIII-SODIMM0**

Size: Custom | Document Number: **NWQAA LA6061P M/B** | Rev: 2.0

Date: Wednesday, March 24, 2010 | Sheet 11 of 45

Standard Type
DDR3 SO-DIMM B

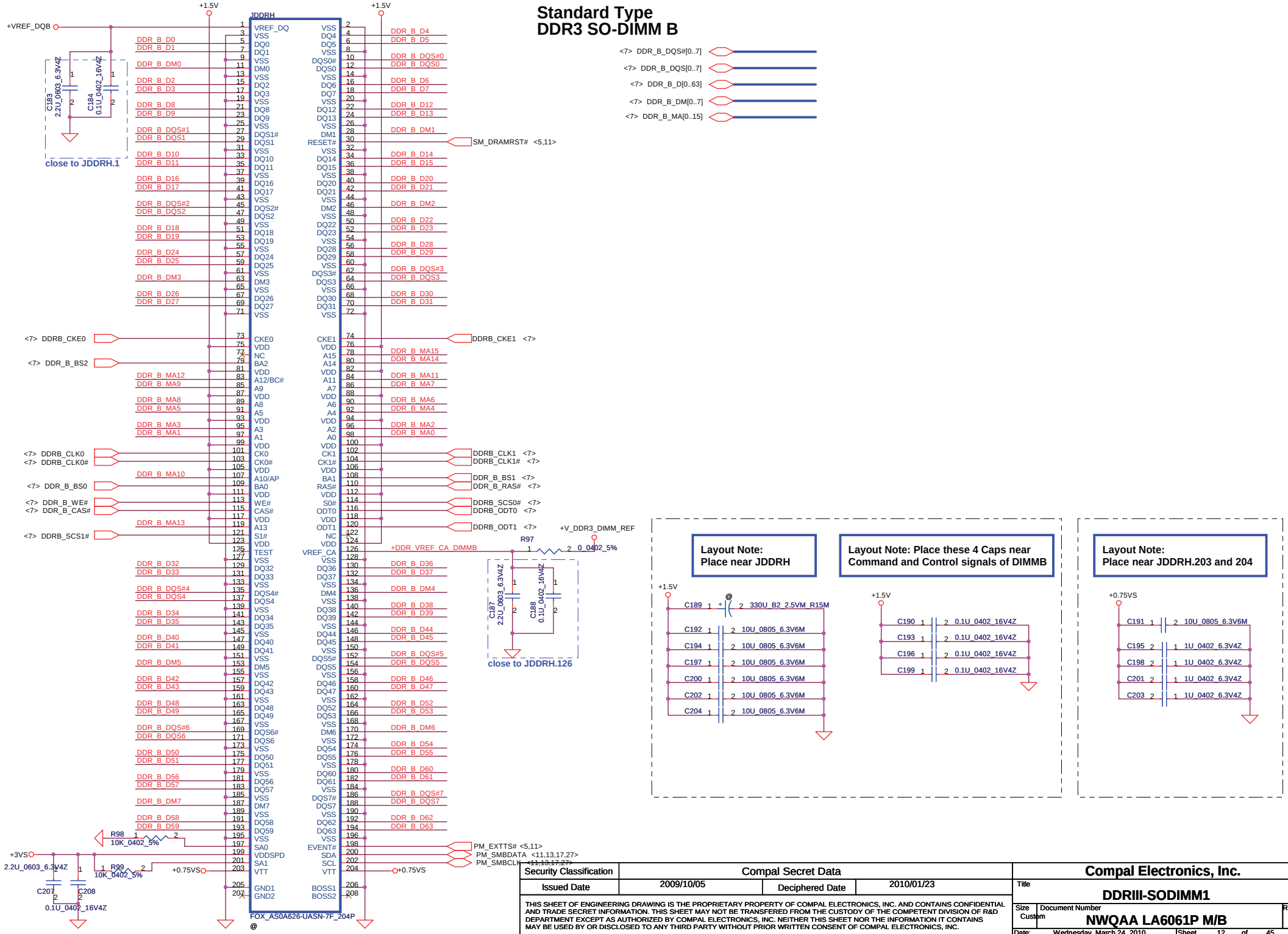

Security Classification	Compal Secret Data		
Issued Date	2009/10/05	Deciphered Date	2010/01/23

THIS SHEET OF ENGINEERING DRAWING IS THE PROPRIETARY PROPERTY OF COMPAL ELECTRONICS, INC. AND CONTAINS CONFIDENTIAL AND TRADE SECRET INFORMATION. THIS SHEET MAY NOT BE TRANSFERED FROM THE CUSTODY OF THE COMPETENT DIVISION OF R&D DEPARTMENT EXCEPT AS AUTHORIZED BY COMPAL ELECTRONICS, INC. NEITHER THIS SHEET NOR THE INFORMATION IT CONTAINS MAY BE USED BY OR DISCLOSED TO ANY THIRD PARTY WITHOUT PRIOR WRITTEN CONSENT OF COMPAL ELECTRONICS, INC.

Compal Electronics, Inc.

Title: **DDRIII-SODIMM1**

Size: Custom | Document Number: **NWQAA LA6061P M/B** | Rev: 2.0

Date: Wednesday, March 24, 2010 | Sheet 12 of 45

Clock Generator

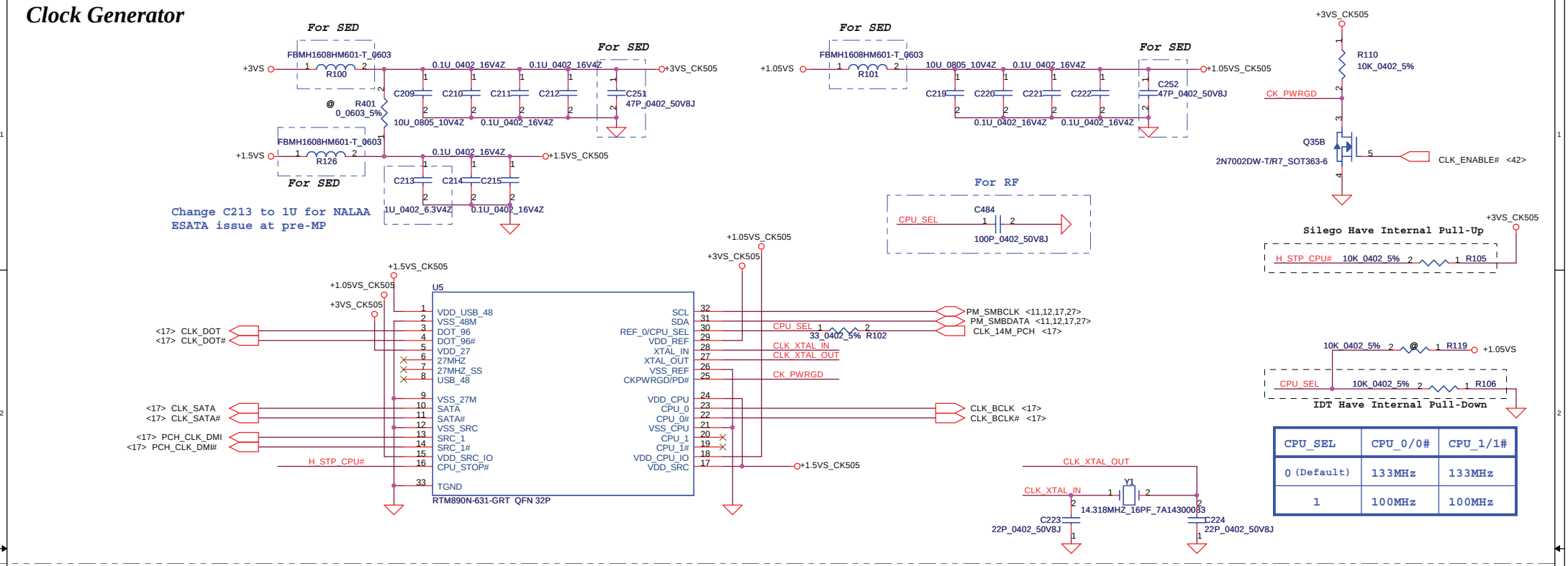

CPU_SEL	CPU_0/0#	CPU_1/1#
0 (Default)	133MHz	133MHz
1	100MHz	100MHz

LCD/PANEL BD. Conn.

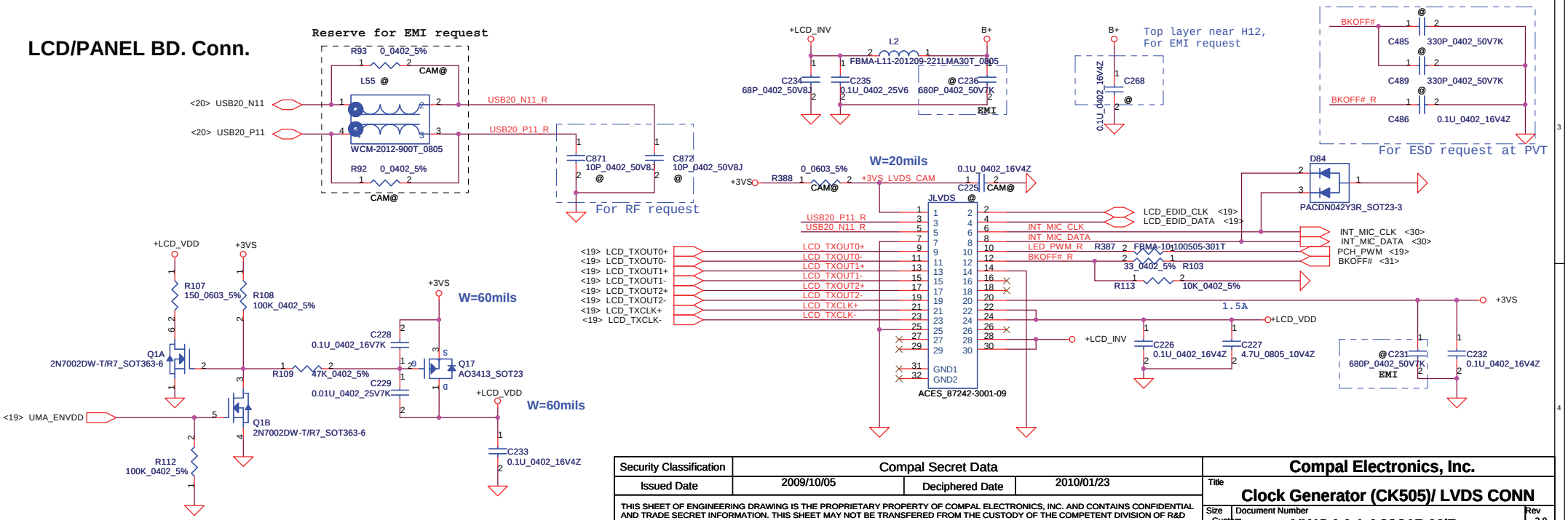

Security Classification	Compal Secret Data		
Issued Date	2009/10/05	Deciphered Date	2010/01/23

THIS SHEET OF ENGINEERING DRAWING IS THE PROPRIETARY PROPERTY OF COMPAL ELECTRONICS, INC. AND CONTAINS CONFIDENTIAL AND TRADE SECRET INFORMATION. THIS SHEET MAY NOT BE TRANSFERED FROM THE CUSTODY OF THE COMPETENT DIVISION OF R&D DEPARTMENT EXCEPT AS AUTHORIZED BY COMPAL ELECTRONICS, INC. NEITHER THIS SHEET NOR THE INFORMATION IT CONTAINS MAY BE USED BY OR DISCLOSED TO ANY THIRD PARTY WITHOUT PRIOR WRITTEN CONSENT OF COMPAL ELECTRONICS, INC.

Compal Electronics, Inc.

Title: **Clock Generator (CK505)/ LVDS CONN**

Size: Custom | Document Number: **NWQAA LA6061P M/B** | Rev: 2.0

Date: Wednesday, March 24, 2010 | Sheet 13 of 45

CRT CONNECTOR

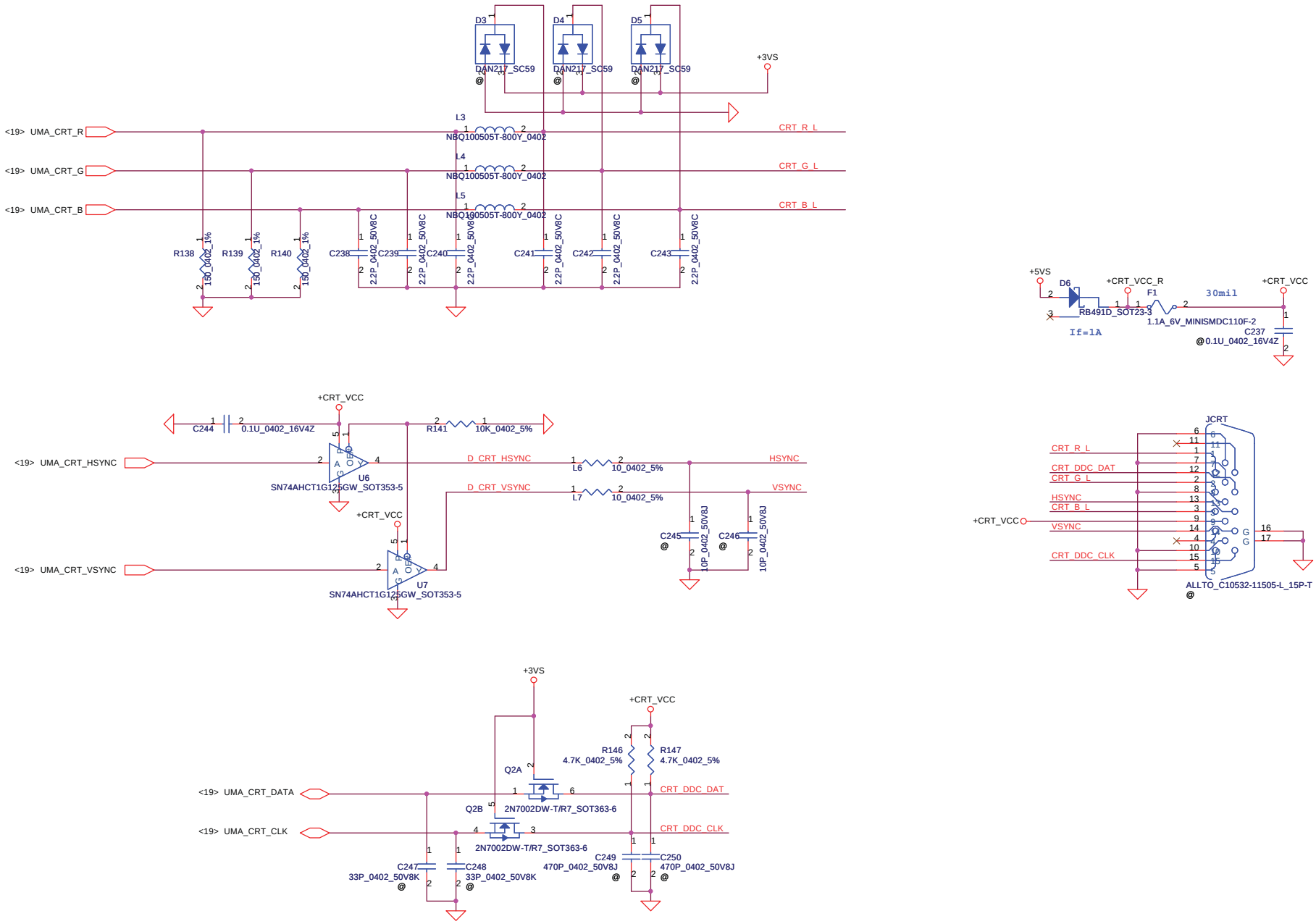

Security Classification	Compal Secret Data		
Issued Date	2009/10/05	Deciphered Date	2010/01/23

THIS SHEET OF ENGINEERING DRAWING IS THE PROPRIETARY PROPERTY OF COMPAL ELECTRONICS, INC. AND CONTAINS CONFIDENTIAL AND TRADE SECRET INFORMATION. THIS SHEET MAY NOT BE TRANSFERED FROM THE CUSTODY OF THE COMPETENT DIVISION OF R&D DEPARTMENT EXCEPT AS AUTHORIZED BY COMPAL ELECTRONICS, INC. NEITHER THIS SHEET NOR THE INFORMATION IT CONTAINS MAY BE USED BY OR DISCLOSED TO ANY THIRD PARTY WITHOUT PRIOR WRITTEN CONSENT OF COMPAL ELECTRONICS, INC.

Compal Electronics, Inc.

Title: CRT\TV\LVDS

Size | Document Number: NWQAA LA6061P M/B | Rev: 2.0

Date: Wednesday, March 24, 2010 | Sheet 14 of 45

HDMI CEC Controller

Address:0011010X

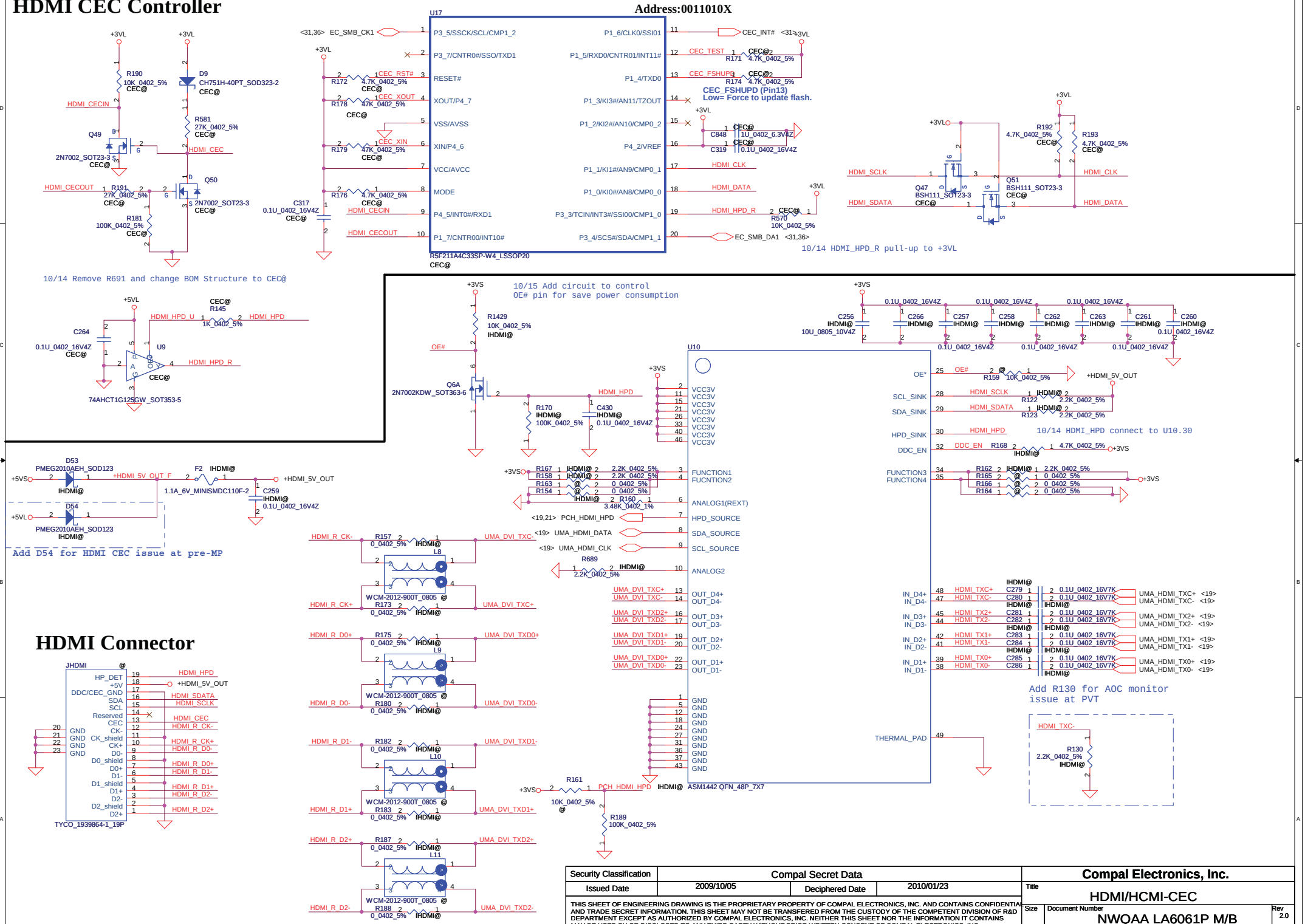

Security Classification	Compal Secret Data		
Issued Date	2009/10/05	Deciphered Date	2010/01/23

THIS SHEET OF ENGINEERING DRAWING IS THE PROPRIETARY PROPERTY OF COMPAL ELECTRONICS, INC. AND CONTAINS CONFIDENTIAL AND TRADE SECRET INFORMATION. THIS SHEET MAY NOT BE TRANSFERED FROM THE CUSTODY OF THE COMPETENT DIVISION OF R&D DEPARTMENT EXCEPT AS AUTHORIZED BY COMPAL ELECTRONICS, INC. NEITHER THIS SHEET NOR THE INFORMATION IT CONTAINS MAY BE USED BY OR DISCLOSED TO ANY THIRD PARTY WITHOUT PRIOR WRITTEN CONSENT OF COMPAL ELECTRONICS, INC.

Compal Electronics, Inc.

Title: HDMI/HCMI-CEC

Size | Document Number: NWQAA LA6061P M/B | Rev 2.0

Date: Wednesday, March 24, 2010 | Sheet 15 of 45

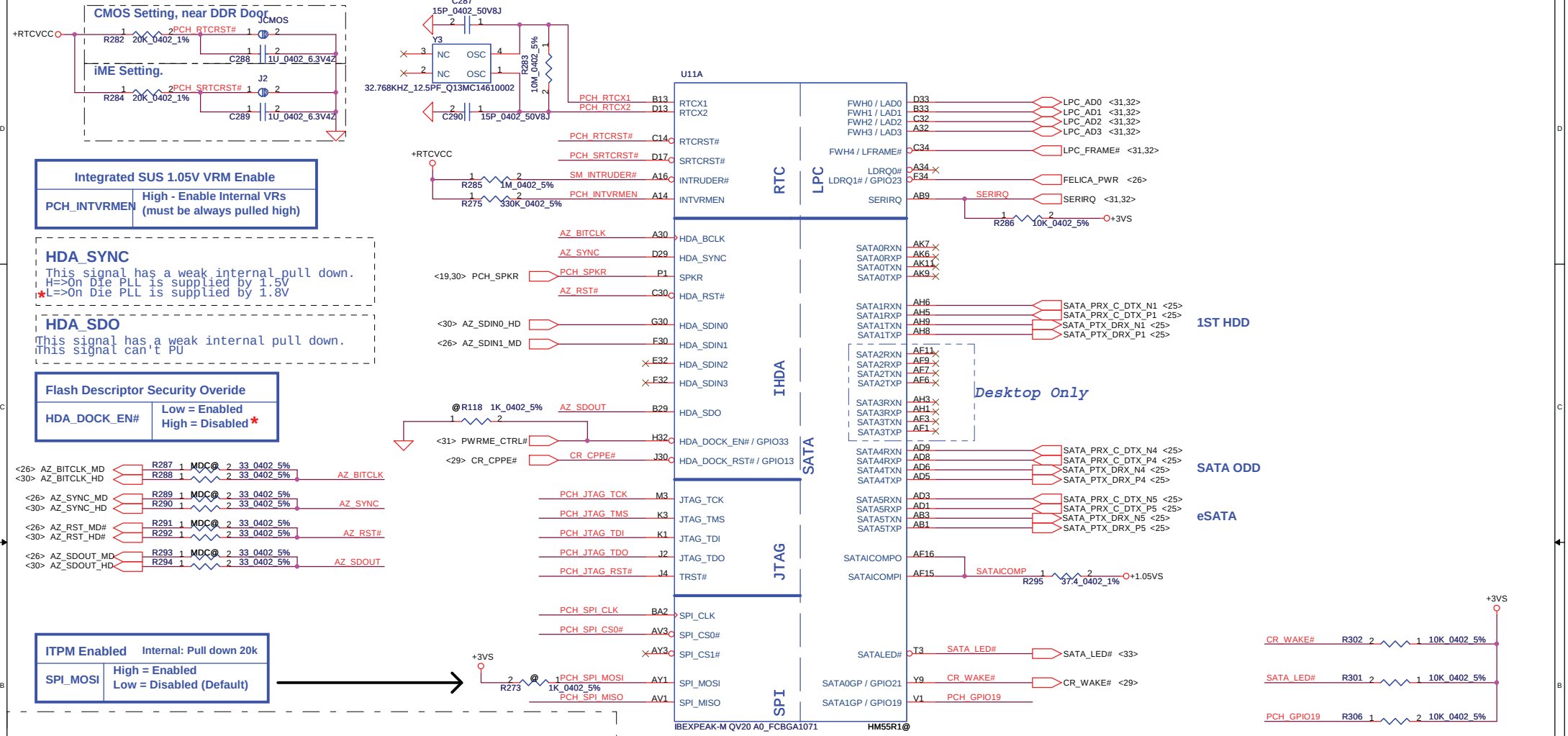

Integrated SUS 1.05V VRM Enable

PCH_INTVRMEN	High - Enable Internal VRs (must be always pulled high)

HDA_SYNC

This signal has a weak internal pull down.
H=>On Die PLL is supplied by 1.5V
*L=>On Die PLL is supplied by 1.8V

HDA_SDO

This signal has a weak internal pull down.
This signal can't PU

Flash Descriptor Security Overide

HDA_DOCK_EN#	Low = Enabled High = Disabled *

<26> AZ_BITCLK_MD <30> AZ_BITCLK_HD	R287 MDC@ 33_0402_5% R288 33_0402_5% AZ_BITCLK
<26> AZ_SYNC_MD <30> AZ_SYNC_HD	R289 MDC@ 33_0402_5% R290 33_0402_5% AZ_SYNC
<26> AZ_RST_MD# <30> AZ_RST_HD#	R291 MDC@ 33_0402_5% R292 33_0402_5% AZ_RST#
<26> AZ_SDOUT_MD <30> AZ_SDOUT_HD	R293 MDC@ 33_0402_5% R294 33_0402_5% AZ_SDOUT

PCH Pin	RefDes	PCH JTAG Enable ES1	PCH JTAG Enable ES2	PCH JTAG Disable (Default) ES1	PCH JTAG Disable (Default) ES2
PCH_JTAG_TDO	R358	No Install	200ohm	No Install	No Install
	R535	No Install	100ohm	No Install	No Install
PCH_JTAG_TMS	R355	200ohm	200ohm	No Install	No Install
	R354	100ohm	100ohm	No Install	No Install
PCH_JTAG_TDI	R536	200ohm	200ohm	20Kohm	No Install
	R537	100ohm	100ohm	10Kohm	No Install
PCH_JTAG_TCK	R156	51ohm	51ohm	51ohm	51ohm
PCH_JTAG_RST#	R643	20Kohm	20Kohm	No Install	No Install
	R353	10Kohm	10Kohm	No Install	No Install

Security Classification	Compal Secret Data		
Issued Date	2009/10/05	Deciphered Date	2010/01/23

THIS SHEET OF ENGINEERING DRAWING IS THE PROPRIETARY PROPERTY OF COMPAL ELECTRONICS, INC. AND CONTAINS CONFIDENTIAL AND TRADE SECRET INFORMATION. THIS SHEET MAY NOT BE TRANSFERED FROM THE CUSTODY OF THE COMPETENT DIVISION OF R&D DEPARTMENT EXCEPT AS AUTHORIZED BY COMPAL ELECTRONICS, INC. NEITHER THIS SHEET NOR THE INFORMATION IT CONTAINS MAY BE USED BY OR DISCLOSED TO ANY THIRD PARTY WITHOUT PRIOR WRITTEN CONSENT OF COMPAL ELECTRONICS, INC.

Compal Electronics, Inc.

Title: **PCH-SPI/SATA/LPC/RTC/HDA**

Size: B | Document Number: **NWQAA LA6061P M/B** | Rev: 2.0

Date: Wednesday, March 24, 2010 | Sheet 16 of 45

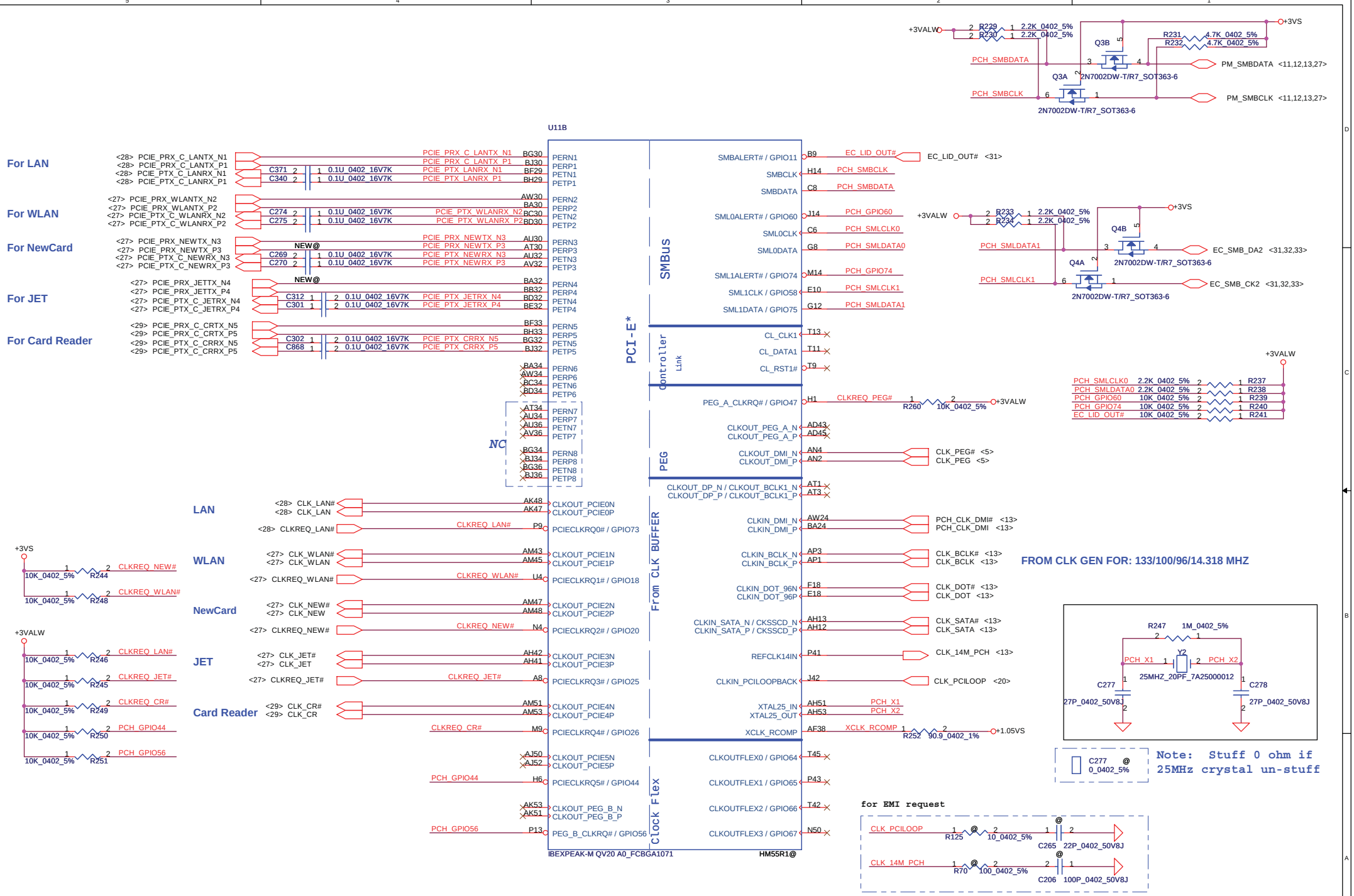

Security Classification	Compal Secret Data		
Issued Date	2009/10/05	Deciphered Date	2010/01/23

THIS SHEET OF ENGINEERING DRAWING IS THE PROPRIETARY PROPERTY OF COMPAL ELECTRONICS, INC. AND CONTAINS CONFIDENTIAL AND TRADE SECRET INFORMATION. THIS SHEET MAY NOT BE TRANSFERED FROM THE CUSTODY OF THE COMPETENT DIVISION OF R&D DEPARTMENT EXCEPT AS AUTHORIZED BY COMPAL ELECTRONICS, INC. NEITHER THIS SHEET NOR THE INFORMATION IT CONTAINS MAY BE USED BY OR DISCLOSED TO ANY THIRD PARTY WITHOUT PRIOR WRITTEN CONSENT OF COMPAL ELECTRONICS, INC.

Compal Electronics, Inc.

Title: **CLK/PCIE/SMBUS**

Size: B | Document Number: **NWQAA LA6061P M/B** | Rev: 2.0

Date: Wednesday, March 24, 2010 | Sheet 17 of 45

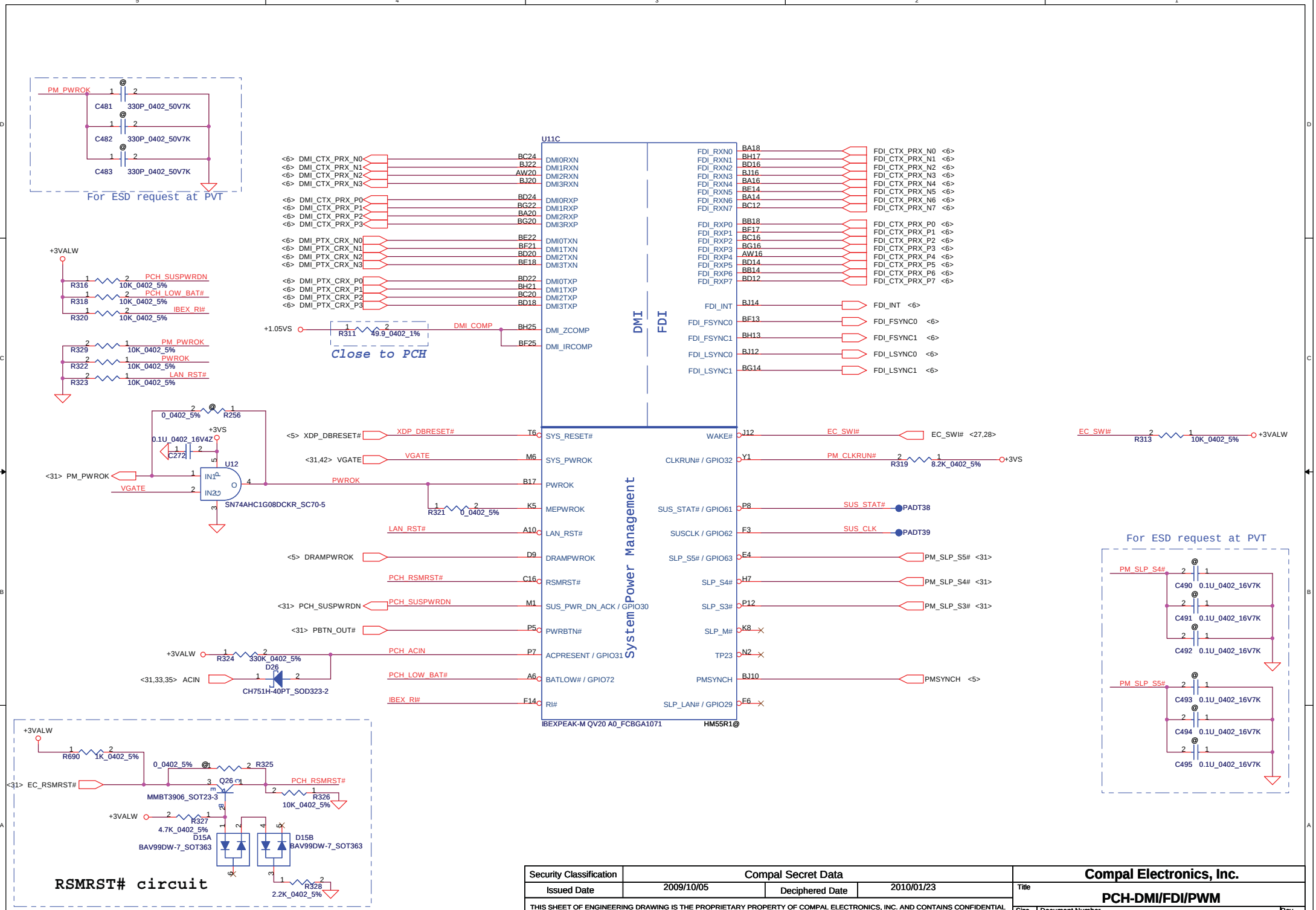

Security Classification	Compal Secret Data		
Issued Date	2009/10/05	Deciphered Date	2010/01/23

THIS SHEET OF ENGINEERING DRAWING IS THE PROPRIETARY PROPERTY OF COMPAL ELECTRONICS, INC. AND CONTAINS CONFIDENTIAL AND TRADE SECRET INFORMATION. THIS SHEET MAY NOT BE TRANSFERED FROM THE CUSTODY OF THE COMPETENT DIVISION OF R&D DEPARTMENT EXCEPT AS AUTHORIZED BY COMPAL ELECTRONICS, INC. NEITHER THIS SHEET NOR THE INFORMATION IT CONTAINS MAY BE USED BY OR DISCLOSED TO ANY THIRD PARTY WITHOUT PRIOR WRITTEN CONSENT OF COMPAL ELECTRONICS, INC.

Compal Electronics, Inc.

Title: **PCH-DMI/FDI/PWM**

Size: B | Document Number: **NWQAA LA6061P M/B** | Rev: 2.0

Date: Wednesday, March 24, 2010 | Sheet 18 of 45

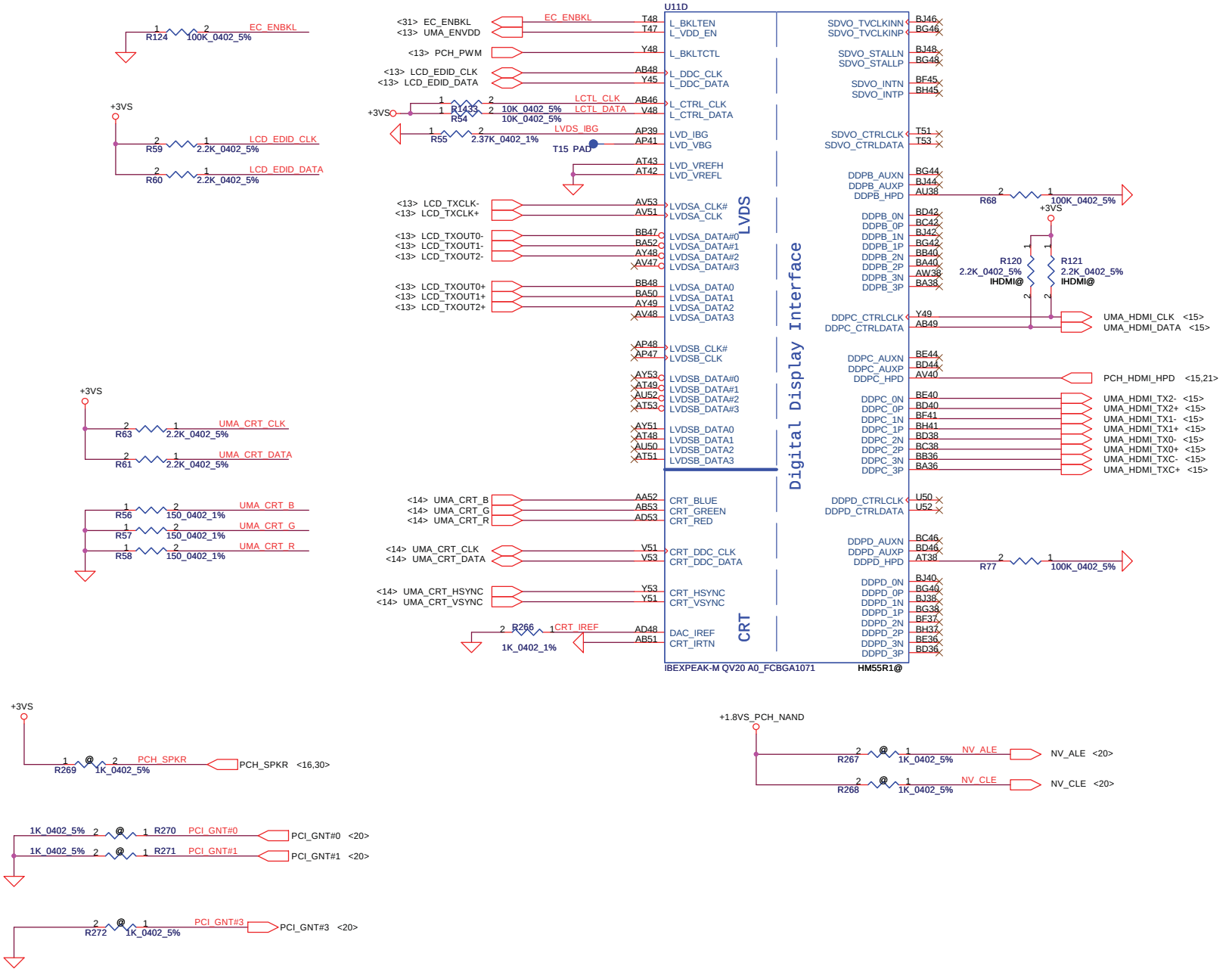

Security Classification	Compal Secret Data		
Issued Date	2009/10/05	Deciphered Date	2010/01/23

THIS SHEET OF ENGINEERING DRAWING IS THE PROPRIETARY PROPERTY OF COMPAL ELECTRONICS, INC. AND CONTAINS CONFIDENTIAL AND TRADE SECRET INFORMATION. THIS SHEET MAY NOT BE TRANSFERED FROM THE CUSTODY OF THE COMPETENT DIVISION OF R&D DEPARTMENT EXCEPT AS AUTHORIZED BY COMPAL ELECTRONICS, INC. NEITHER THIS SHEET NOR THE INFORMATION IT CONTAINS MAY BE USED BY OR DISCLOSED TO ANY THIRD PARTY WITHOUT PRIOR WRITTEN CONSENT OF COMPAL ELECTRONICS, INC.

Compal Electronics, Inc.

Title: **PCH-CRT/LVDS/HDMI**

Size: Custom | Document Number: **NWQAA LA6061P M/B** | Rev: 2.0

Date: Wednesday, March 24, 2010 | Sheet 19 of 45

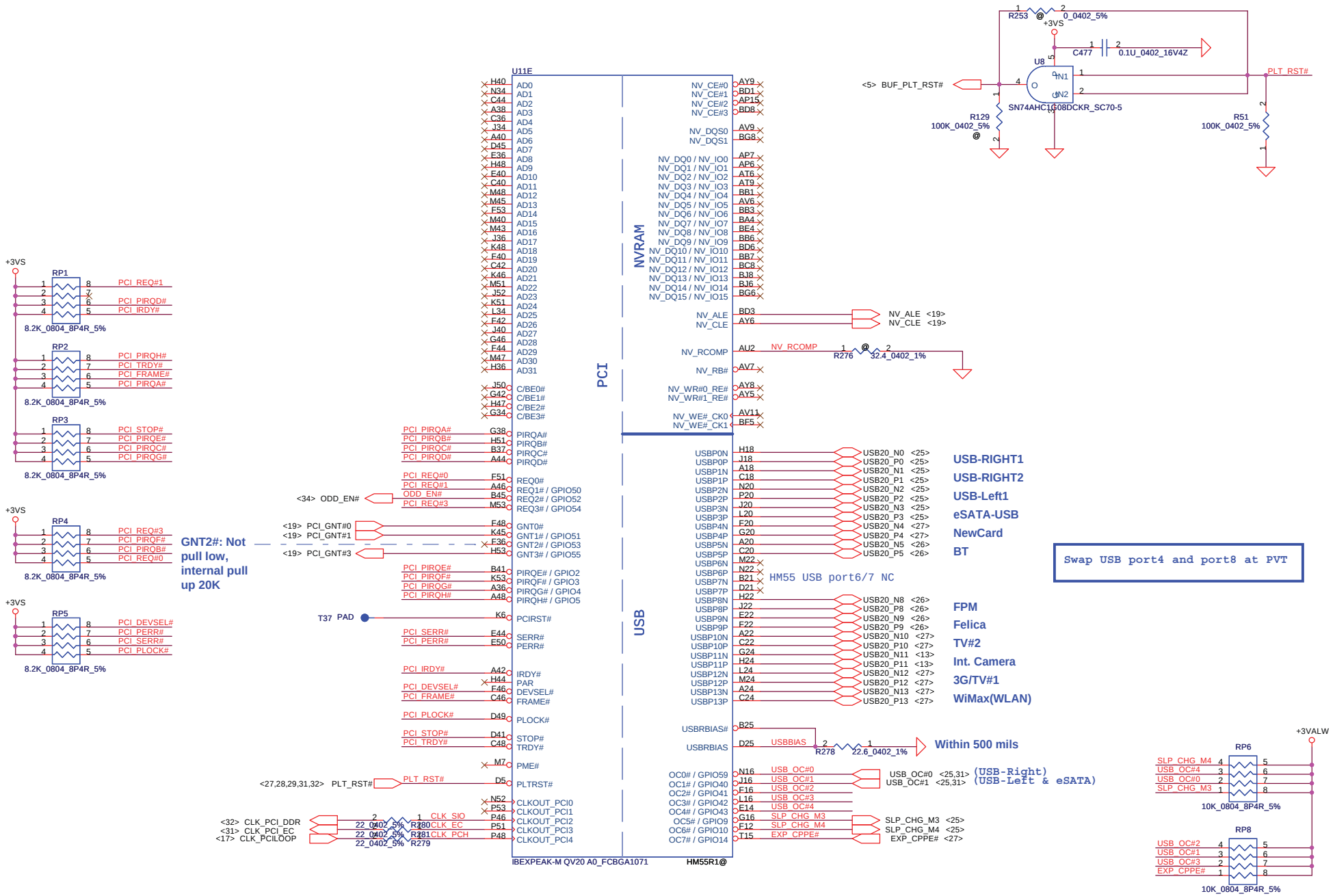

Security Classification	Compal Secret Data		
Issued Date	2009/10/05	Deciphered Date	2010/01/23

THIS SHEET OF ENGINEERING DRAWING IS THE PROPRIETARY PROPERTY OF COMPAL ELECTRONICS, INC. AND CONTAINS CONFIDENTIAL AND TRADE SECRET INFORMATION. THIS SHEET MAY NOT BE TRANSFERED FROM THE CUSTODY OF THE COMPETENT DIVISION OF R&D DEPARTMENT EXCEPT AS AUTHORIZED BY COMPAL ELECTRONICS, INC. NEITHER THIS SHEET NOR THE INFORMATION IT CONTAINS MAY BE USED BY OR DISCLOSED TO ANY THIRD PARTY WITHOUT PRIOR WRITTEN CONSENT OF COMPAL ELECTRONICS, INC.

Compal Electronics, Inc.

Title: **PCH USB/PCI/NAND**

Size: B | Document Number: **NWQAA LA6061P M/B** | Rev: 2.0

Date: Wednesday, March 24, 2010 | Sheet 20 of 45

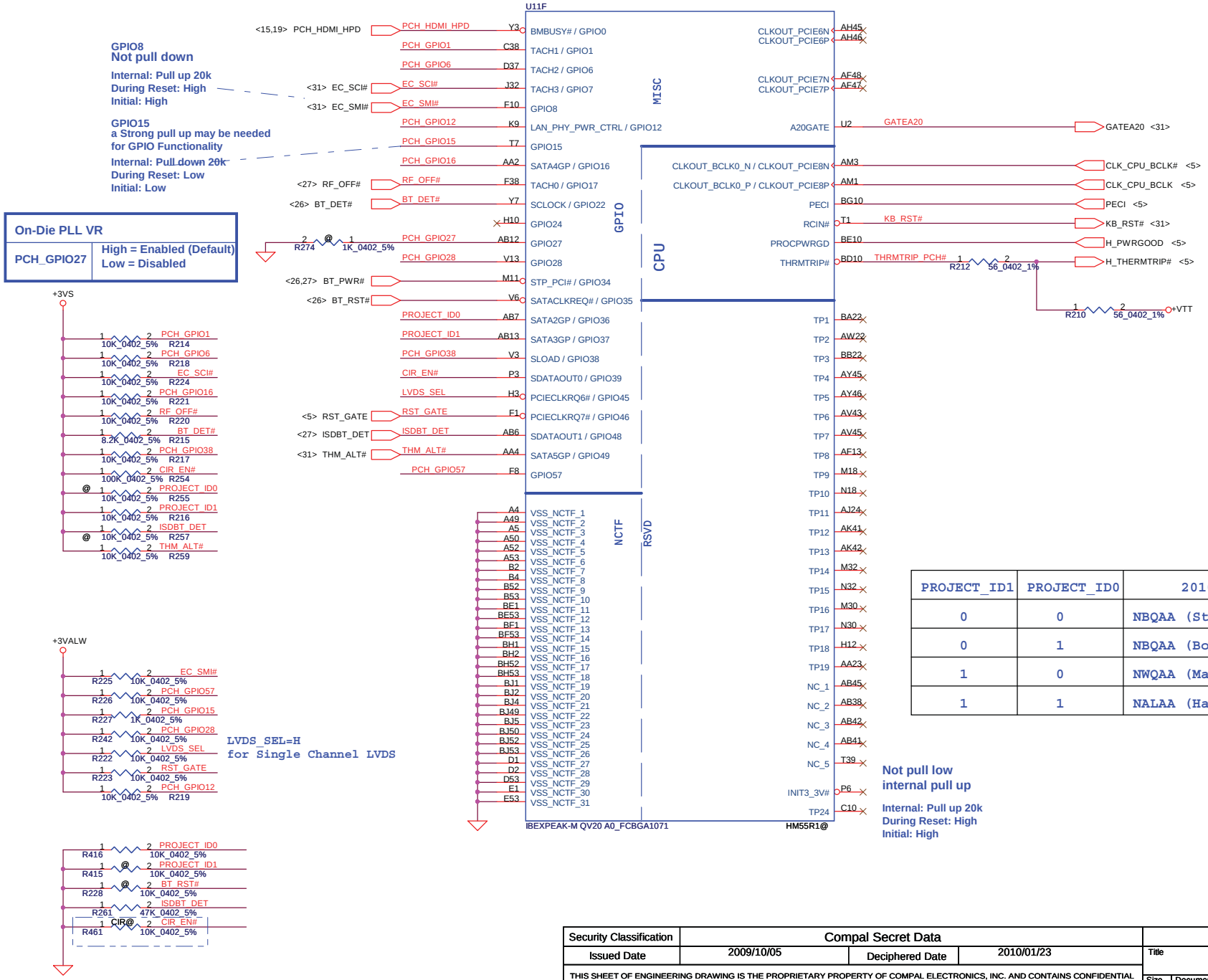

PROJECT_ID1	PROJECT_ID0	2010 Project ID setting
0	0	NBQAA (Streamline-M/-S 11.6/13.3")
0	1	NBQAA (Bordeuax 14")
1	0	NWQAA (Marseille 16")
1	1	NALAA (Hamburg 17.3")

Security Classification	Compal Secret Data		
Issued Date	2009/10/05	Deciphered Date	2010/01/23

THIS SHEET OF ENGINEERING DRAWING IS THE PROPRIETARY PROPERTY OF COMPAL ELECTRONICS, INC. AND CONTAINS CONFIDENTIAL AND TRADE SECRET INFORMATION. THIS SHEET MAY NOT BE TRANSFERED FROM THE CUSTODY OF THE COMPETENT DIVISION OF R&D DEPARTMENT EXCEPT AS AUTHORIZED BY COMPAL ELECTRONICS, INC. NEITHER THIS SHEET NOR THE INFORMATION IT CONTAINS MAY BE USED BY OR DISCLOSED TO ANY THIRD PARTY WITHOUT PRIOR WRITTEN CONSENT OF COMPAL ELECTRONICS, INC.

Compal Electronics, Inc.

Title: **PCH CPU/GPIO**

Size: B | Document Number: **NWQAA LA6061P M/B** | Rev: 2.0

Date: Wednesday, March 24, 2010 | Sheet 21 of 45

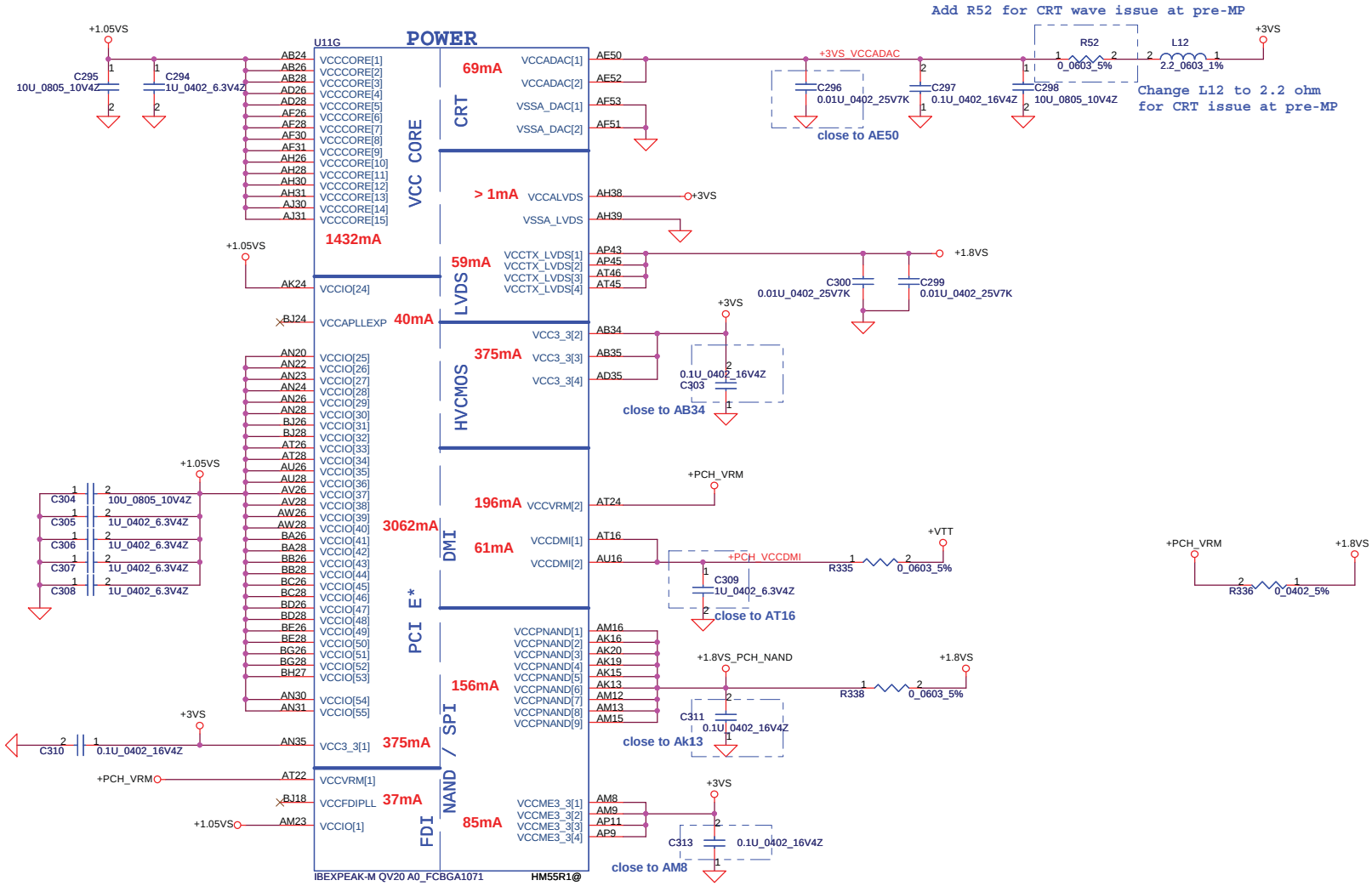

Security Classification	Compal Secret Data		
Issued Date	2009/10/05	Deciphered Date	2010/01/23

THIS SHEET OF ENGINEERING DRAWING IS THE PROPRIETARY PROPERTY OF COMPAL ELECTRONICS, INC. AND CONTAINS CONFIDENTIAL AND TRADE SECRET INFORMATION. THIS SHEET MAY NOT BE TRANSFERED FROM THE CUSTODY OF THE COMPETENT DIVISION OF R&D DEPARTMENT EXCEPT AS AUTHORIZED BY COMPAL ELECTRONICS, INC. NEITHER THIS SHEET NOR THE INFORMATION IT CONTAINS MAY BE USED BY OR DISCLOSED TO ANY THIRD PARTY WITHOUT PRIOR WRITTEN CONSENT OF COMPAL ELECTRONICS, INC.

Compal Electronics, Inc.

Title: **PCH POWER-1**

Size: B | Document Number: **NWQAA LA6061P M/B** | Rev: 2.0

Date: Tuesday, March 23, 2010 | Sheet 22 of 45

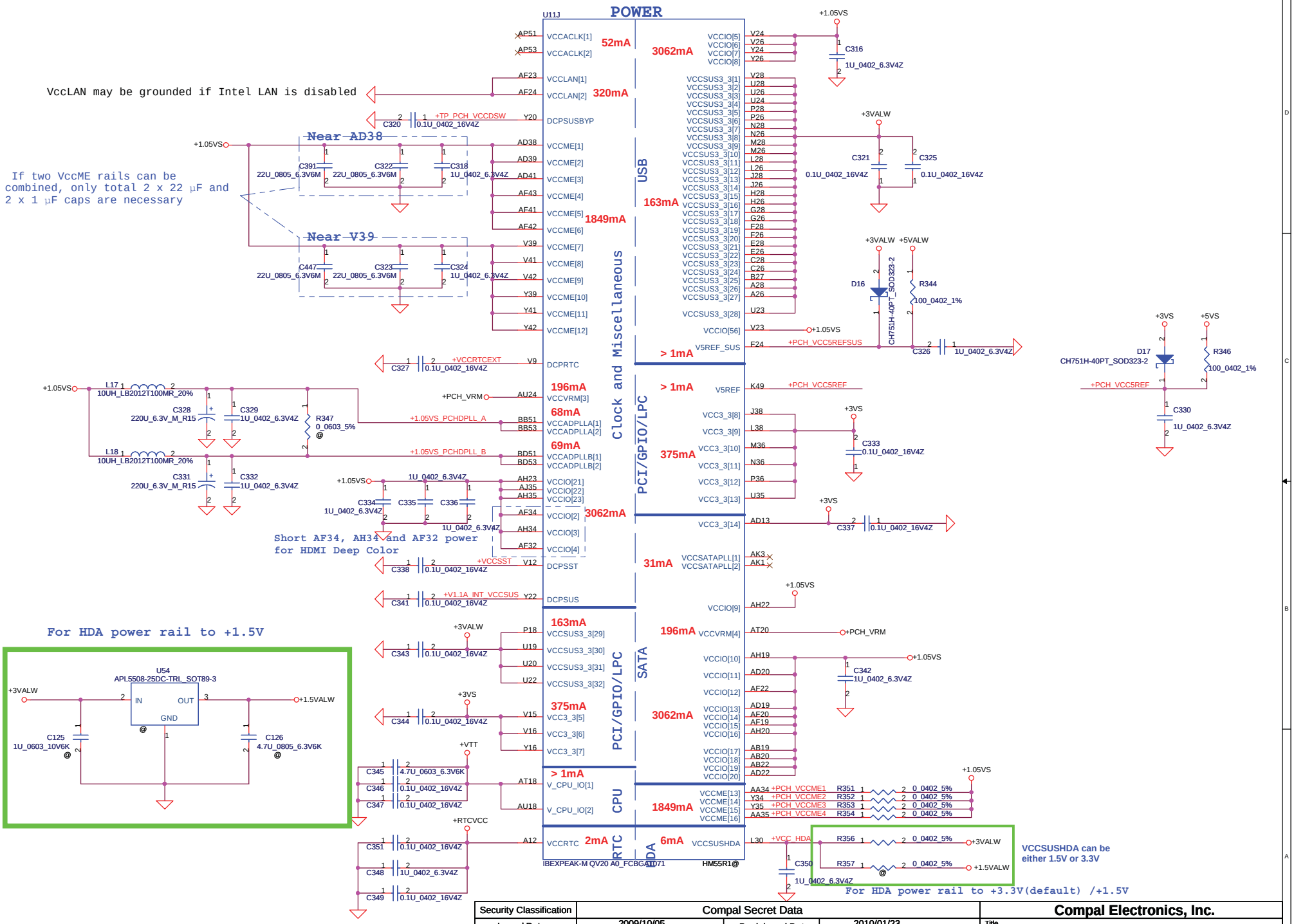

Security Classification	Compal Secret Data			Compal Electronics, Inc.
Issued Date	2009/10/05	Deciphered Date	2010/01/23	Title: PCH POWER-2
				Size: Custom; Document Number: NWQAA LA6061P M/B; Rev: 2.0
				Date: Tuesday, March 23, 2010; Sheet 23 of 45

THIS SHEET OF ENGINEERING DRAWING IS THE PROPRIETARY PROPERTY OF COMPAL ELECTRONICS, INC. AND CONTAINS CONFIDENTIAL AND TRADE SECRET INFORMATION. THIS SHEET MAY NOT BE TRANSFERED FROM THE CUSTODY OF THE COMPETENT DIVISION OF R&D DEPARTMENT EXCEPT AS AUTHORIZED BY COMPAL ELECTRONICS, INC. NEITHER THIS SHEET NOR THE INFORMATION IT CONTAINS MAY BE USED BY OR DISCLOSED TO ANY THIRD PARTY WITHOUT PRIOR WRITTEN CONSENT OF COMPAL ELECTRONICS, INC.

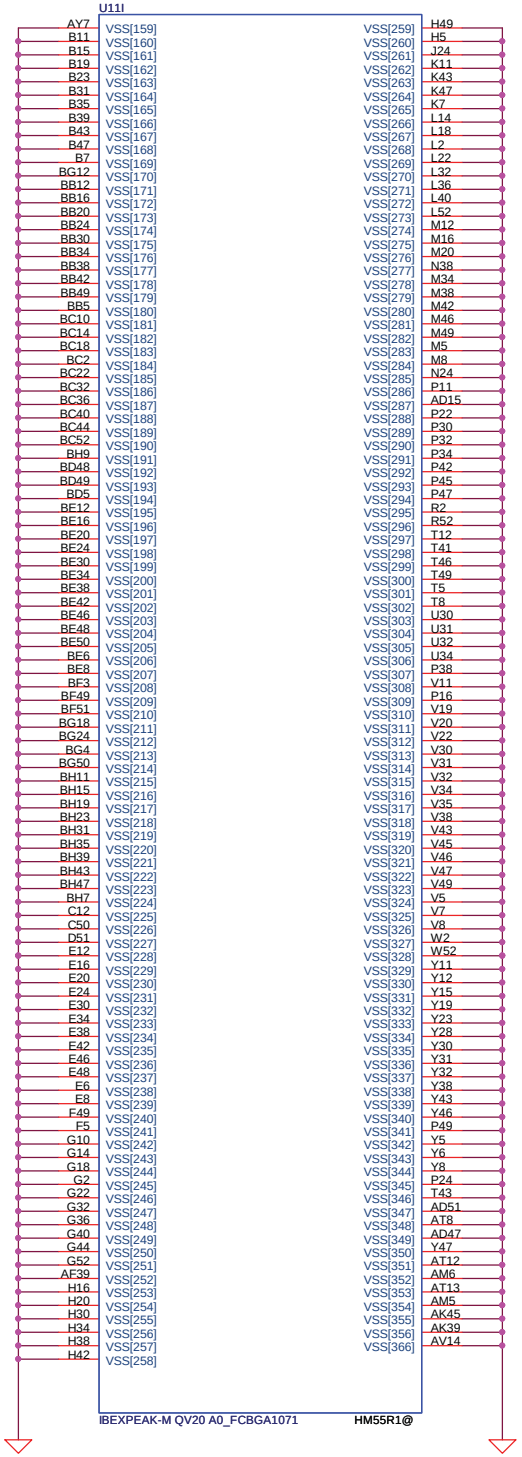

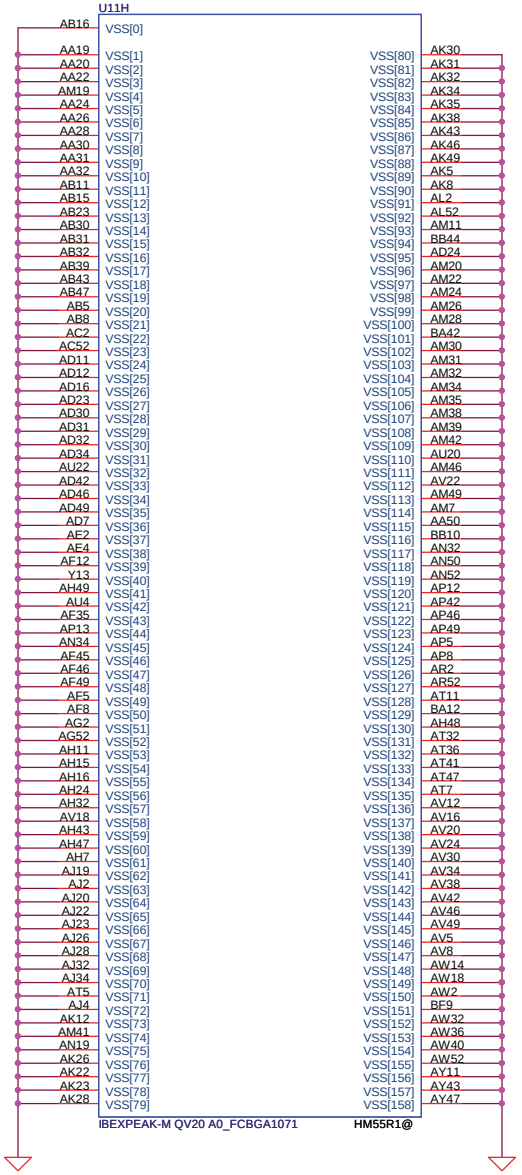

Security Classification	Compal Secret Data		
Issued Date	2009/10/05	Deciphered Date	2010/01/23

THIS SHEET OF ENGINEERING DRAWING IS THE PROPRIETARY PROPERTY OF COMPAL ELECTRONICS, INC. AND CONTAINS CONFIDENTIAL AND TRADE SECRET INFORMATION. THIS SHEET MAY NOT BE TRANSFERED FROM THE CUSTODY OF THE COMPETENT DIVISION OF R&D DEPARTMENT EXCEPT AS AUTHORIZED BY COMPAL ELECTRONICS, INC. NEITHER THIS SHEET NOR THE INFORMATION IT CONTAINS MAY BE USED BY OR DISCLOSED TO ANY THIRD PARTY WITHOUT PRIOR WRITTEN CONSENT OF COMPAL ELECTRONICS, INC.

Compal Electronics, Inc.

Title: **PCH-GND**

Size: Custom | Document Number: **NWQAA LA6061P M/B** | Rev: 2.0

Date: Tuesday, March 23, 2010 | Sheet 24 of 45

SATA HDD Conn.

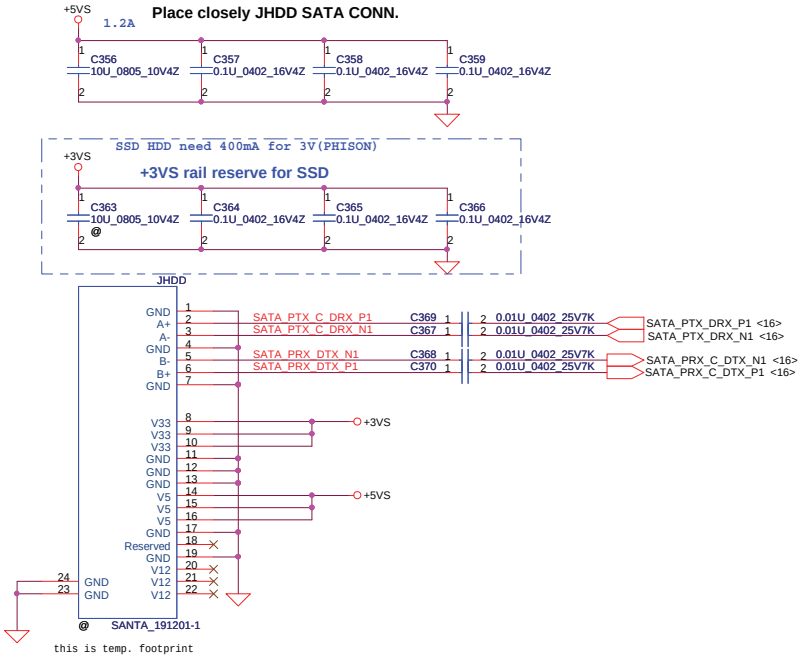

SATA ODD Conn

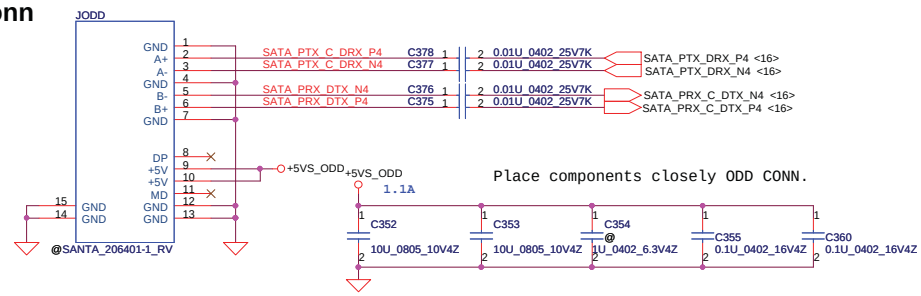

USB Board@ Right Side

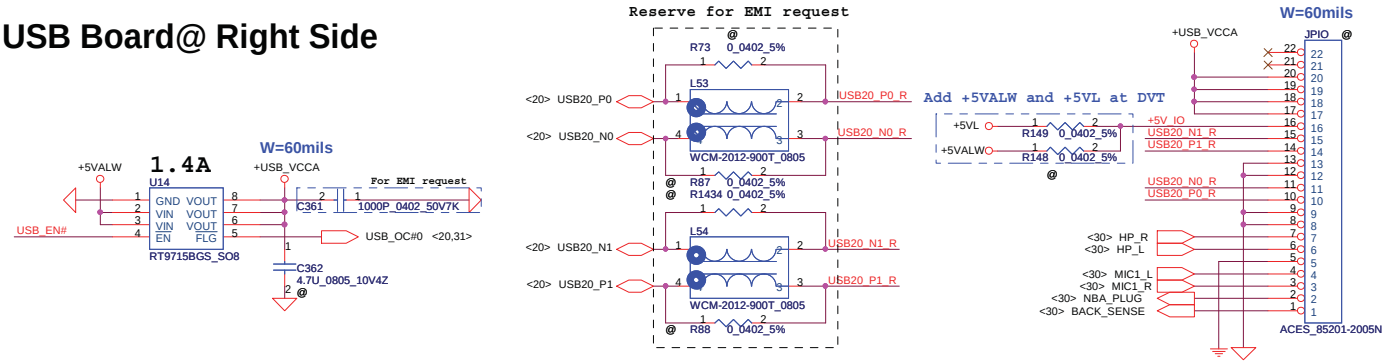

eSATA/USB Combo

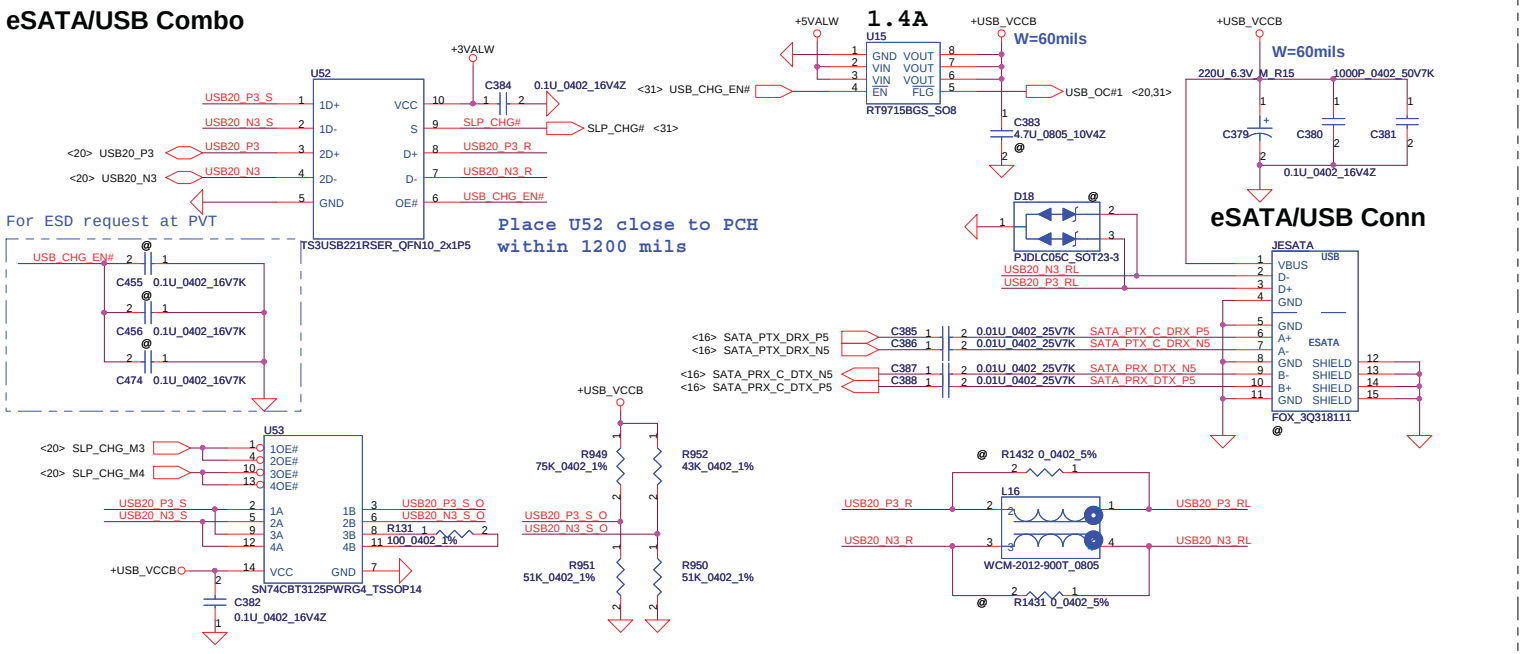

SLP_CHG	FUNCTION
LOW	D=1D
HIGH	D=2D

	SLP_CHG_M3	SLP_CHG_M4
Mode 3	HIGH	LOW
Mode 4	LOW	HIGH

USB Board@ Left Side

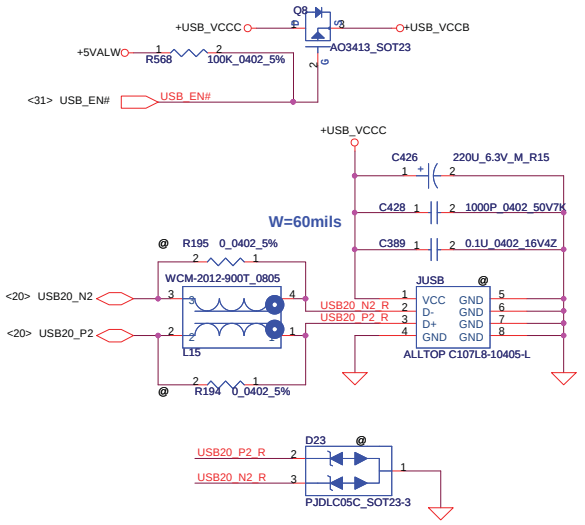

Security Classification	Compal Secret Data		
Issued Date	2009/10/05	Deciphered Date	2010/01/23

THIS SHEET OF ENGINEERING DRAWING IS THE PROPRIETARY PROPERTY OF COMPAL ELECTRONICS, INC. AND CONTAINS CONFIDENTIAL AND TRADE SECRET INFORMATION. THIS SHEET MAY NOT BE TRANSFERED FROM THE CUSTODY OF THE COMPETENT DIVISION OF R&D DEPARTMENT EXCEPT AS AUTHORIZED BY COMPAL ELECTRONICS, INC. NEITHER THIS SHEET NOR THE INFORMATION IT CONTAINS MAY BE USED BY OR DISCLOSED TO ANY THIRD PARTY WITHOUT PRIOR WRITTEN CONSENT OF COMPAL ELECTRONICS, INC.

Compal Electronics, Inc.

Title: SATA-HDD/ODD/USB

Size | Document Number: NWQAA LA6061P M/B | Rev: 2.0

Date: Wednesday, March 24, 2010 | Sheet 25 of 45

BlueTooth Interface

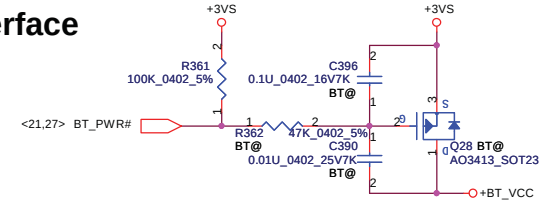

Bluetooth Connector

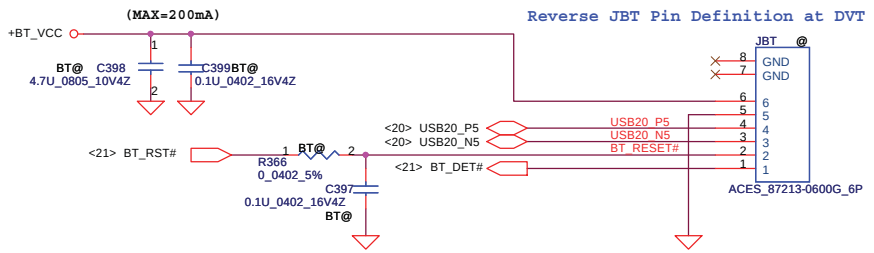

MDC 1.5 Conn.

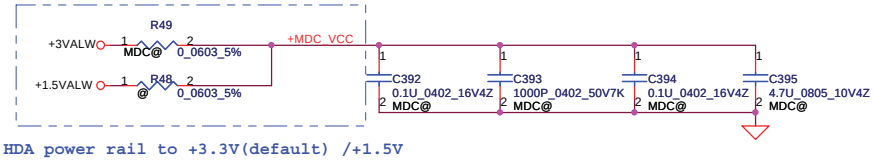

For HDA power rail to +3.3V(default) /+1.5V

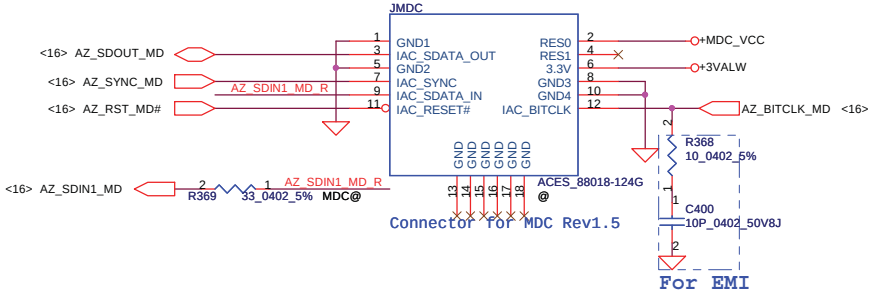

B-CAS Circuit

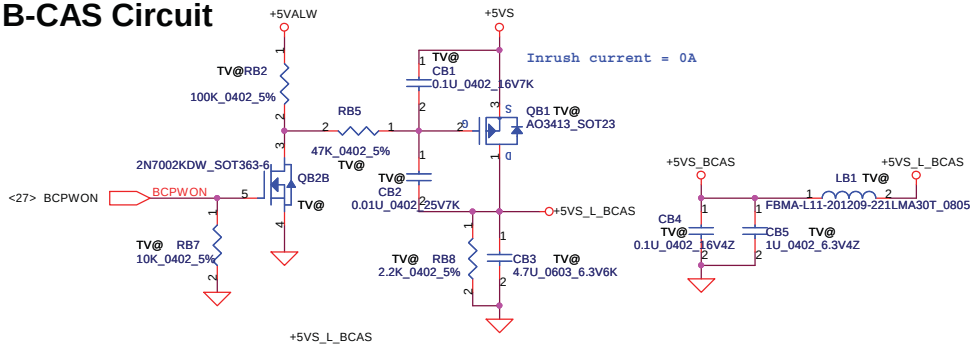

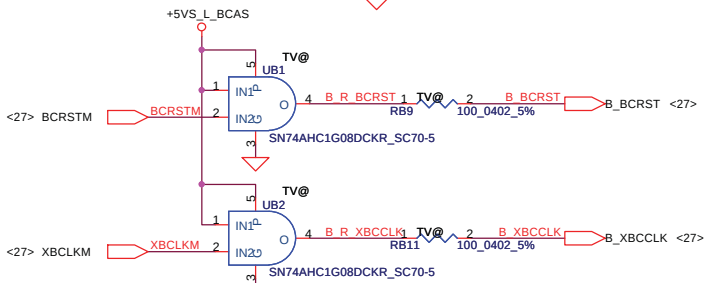

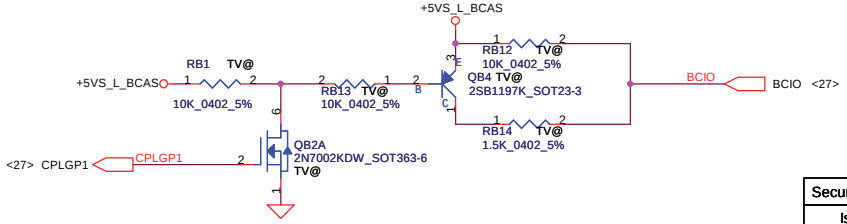

Felica

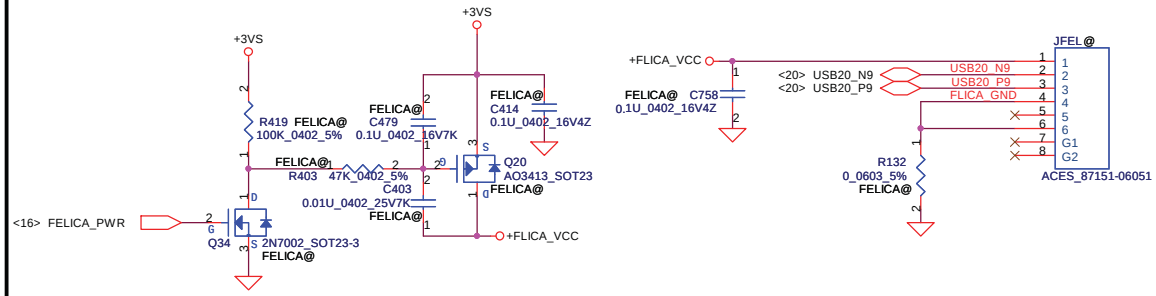

Finger printer

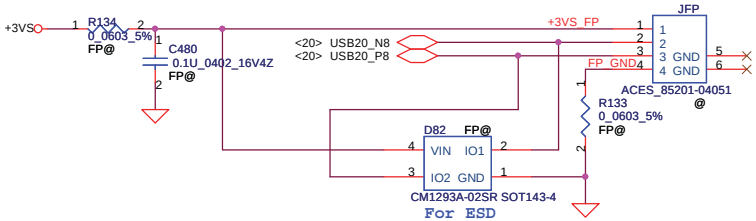

Security Classification	Compal Secret Data		
Issued Date	2009/10/05	Deciphered Date	2010/01/23

THIS SHEET OF ENGINEERING DRAWING IS THE PROPRIETARY PROPERTY OF COMPAL ELECTRONICS, INC. AND CONTAINS CONFIDENTIAL AND TRADE SECRET INFORMATION. THIS SHEET MAY NOT BE TRANSFERED FROM THE CUSTODY OF THE COMPETENT DIVISION OF R&D DEPARTMENT EXCEPT AS AUTHORIZED BY COMPAL ELECTRONICS, INC. NEITHER THIS SHEET NOR THE INFORMATION IT CONTAINS MAY BE USED BY OR DISCLOSED TO ANY THIRD PARTY WITHOUT PRIOR WRITTEN CONSENT OF COMPAL ELECTRONICS, INC.

Compal Electronics, Inc.

Title: BT/FP/Felica/B-CAS

Size | Document Number: NWQAA LA6061P M/B | Rev 2.0

Date: Wednesday, March 24, 2010 | Sheet 26 of 45

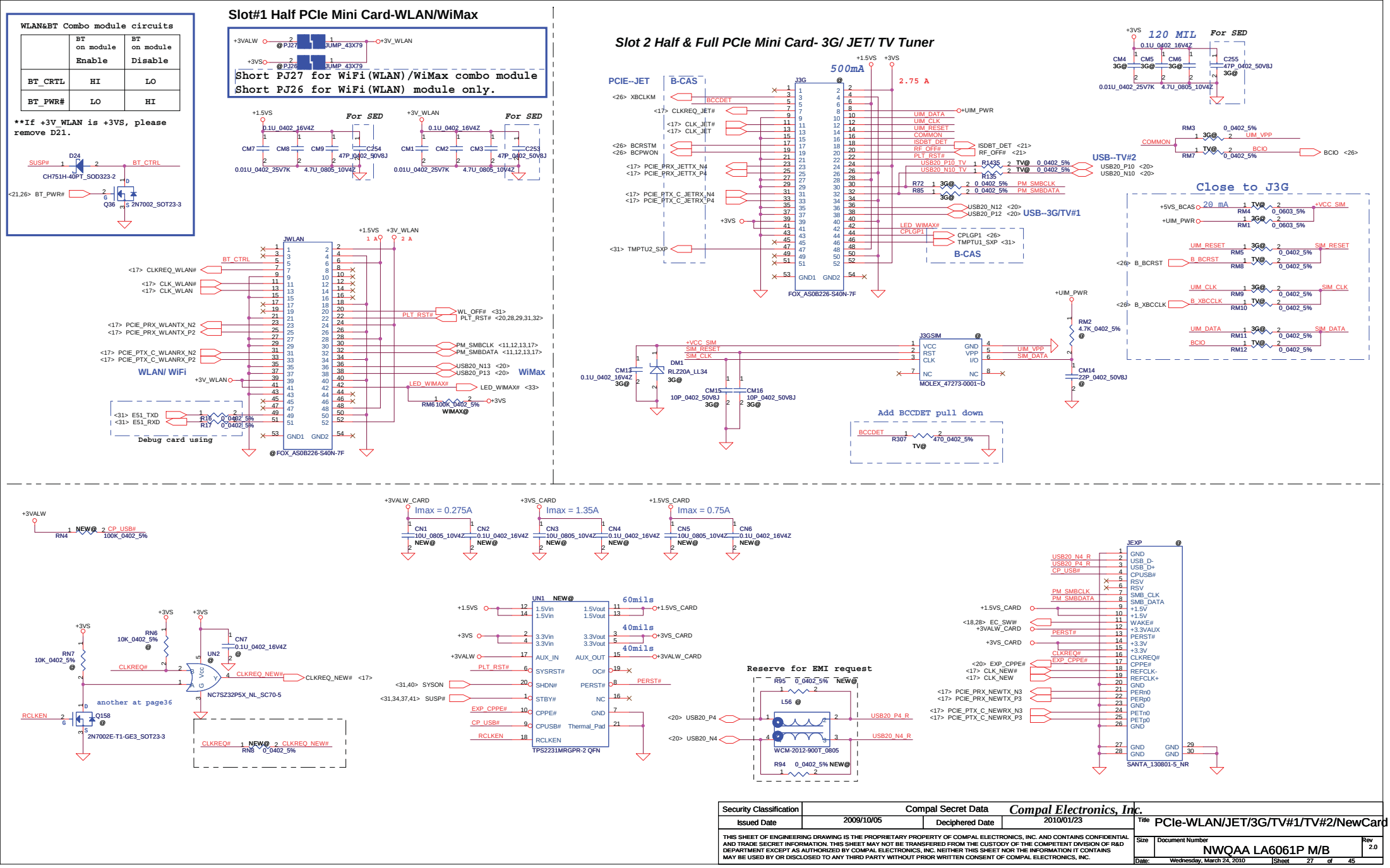
WLAN&BT Combo module circuits
BT on module Enable
BT on module Disable
BT_CRTL HI LO
BT_PWR# LO HI
**If +3V_WLAN is +3VS, please remove D21.
Slot#1 Half PCIe Mini Card-WLAN/WiMax
Short PJ27 for WiFi(WLAN)/WiMax combo module
Short PJ26 for WiFi(WLAN) module only.
Slot 2 Half & Full PCIe Mini Card- 3G/ JET/ TV Tuner
PCIE--JET
B-CAS
500mA
2.75 A
USB--TV#2
USB--3G/TV#1
Close to J3G
WLAN/ WiFi
WiMax
Debug card using
Add BCCDET pull down
Imax = 0.275A
Imax = 1.35A
Imax = 0.75A
Reserve for EMI request
another at page36
FOX_AS0B226-S40N-7F
MOLEX_47273-0001~D
TPS2231MRGPR-2 QFN
SANTA_130801-5_NR
Security Classification
Compal Secret Data
Compal Electronics, Inc.
Issued Date 2009/10/05
Deciphered Date 2010/01/23
Title PCIe-WLAN/JET/3G/TV#1/TV#2/NewCard
Size
Document Number NWQAA LA6061P M/B
Rev 2.0
Date: Wednesday, March 24, 2010
Sheet 27 of 45

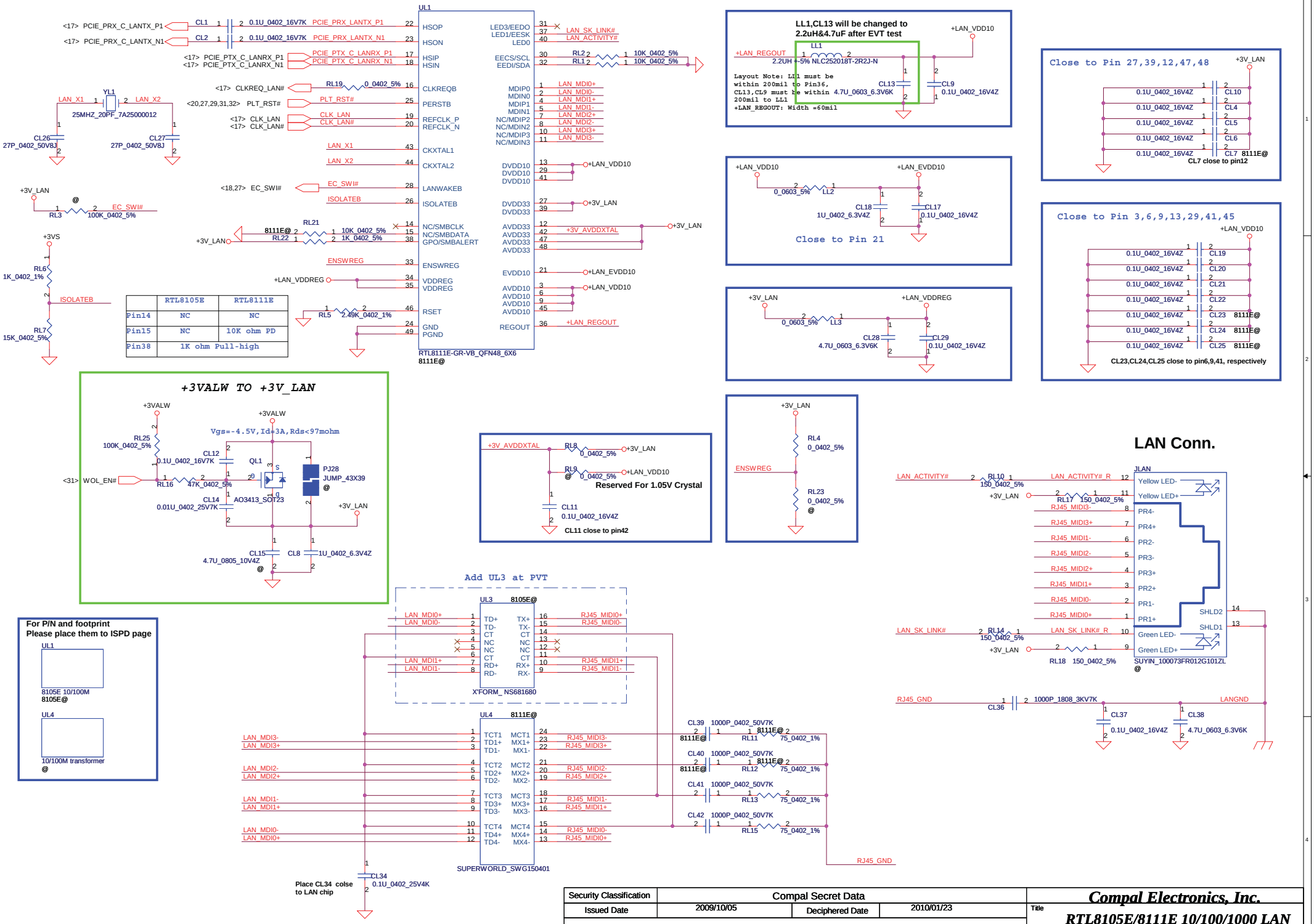

	RTL8105E	RTL8111E
Pin14	NC	NC
Pin15	NC	10K ohm PD
Pin38	1K ohm Pull-high	

Security Classification	Compal Secret Data		
Issued Date	2009/10/05	Deciphered Date	2010/01/23

THIS SHEET OF ENGINEERING DRAWING IS THE PROPRIETARY PROPERTY OF COMPAL ELECTRONICS, INC. AND CONTAINS CONFIDENTIAL AND TRADE SECRET INFORMATION. THIS SHEET MAY NOT BE TRANSFERED FROM THE CUSTODY OF THE COMPETENT DIVISION OF R&D DEPARTMENT EXCEPT AS AUTHORIZED BY COMPAL ELECTRONICS, INC. NEITHER THIS SHEET NOR THE INFORMATION IT CONTAINS MAY BE USED BY OR DISCLOSED TO ANY THIRD PARTY WITHOUT PRIOR WRITTEN CONSENT OF COMPAL ELECTRONICS, INC.

Compal Electronics, Inc.

Title: **RTL8105E/8111E 10/100/1000 LAN**

Size: Custom | Document Number: NWQAA LA6061P M/B | Rev: 2.0

Date: Wednesday, March 24, 2010 | Sheet 28 of 45

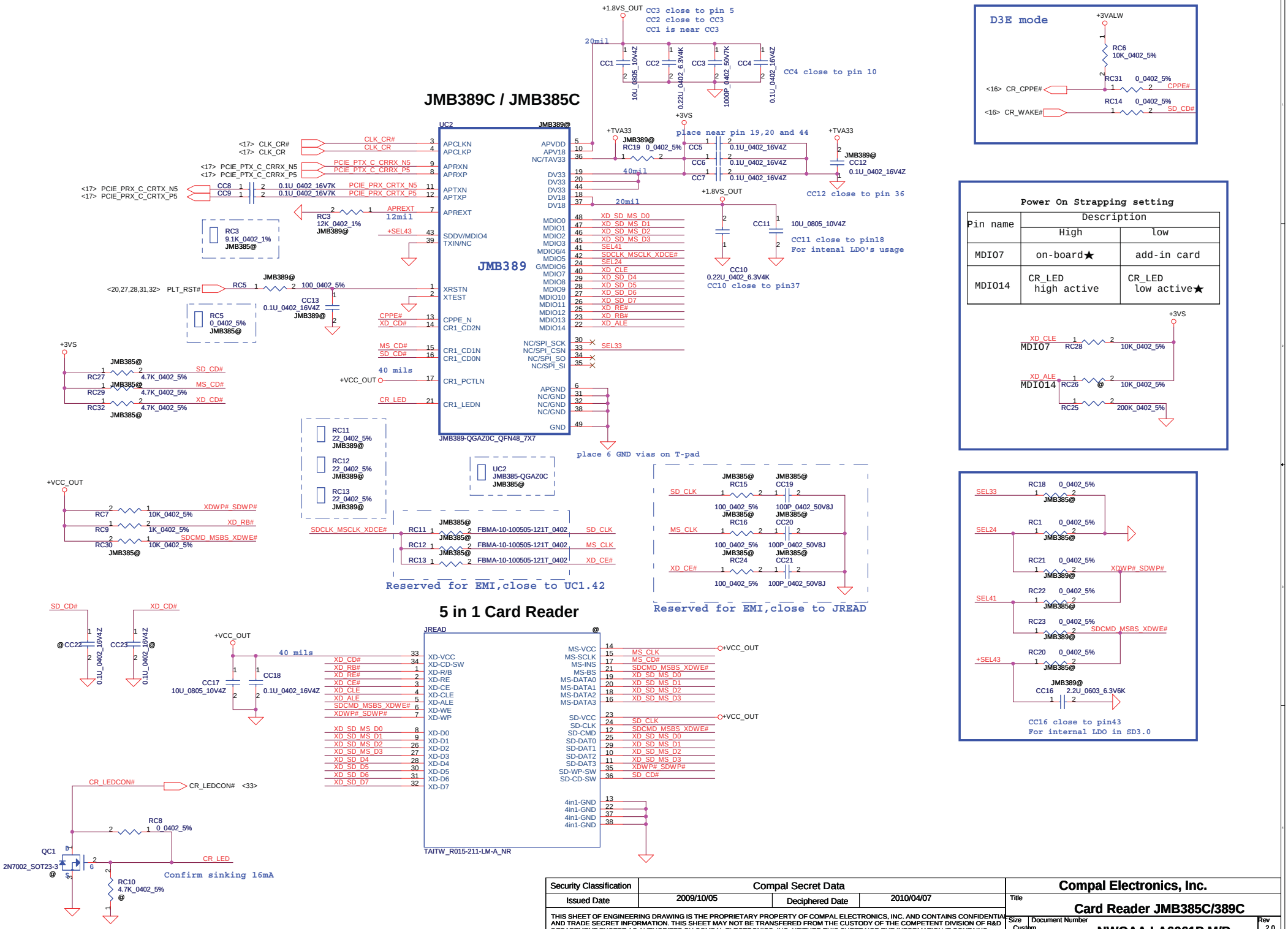

Pin name	Description	
	High	low
MDIO7	on-board★	add-in card
MDIO14	CR_LED high active	CR_LED low active★

Security Classification	Compal Secret Data		
Issued Date	2009/10/05	Deciphered Date	2010/04/07

THIS SHEET OF ENGINEERING DRAWING IS THE PROPRIETARY PROPERTY OF COMPAL ELECTRONICS, INC. AND CONTAINS CONFIDENTIAL AND TRADE SECRET INFORMATION. THIS SHEET MAY NOT BE TRANSFERED FROM THE CUSTODY OF THE COMPETENT DIVISION OF R&D DEPARTMENT EXCEPT AS AUTHORIZED BY COMPAL ELECTRONICS, INC. NEITHER THIS SHEET NOR THE INFORMATION IT CONTAINS MAY BE USED BY OR DISCLOSED TO ANY THIRD PARTY WITHOUT PRIOR WRITTEN CONSENT OF COMPAL ELECTRONICS, INC.

Compal Electronics, Inc.

Title: **Card Reader JMB385C/389C**

Size: Custom | Document Number: **NWQAA LA6061P M/B** | Rev: 2.0

Date: Wednesday, March 24, 2010 | Sheet 29 of 45

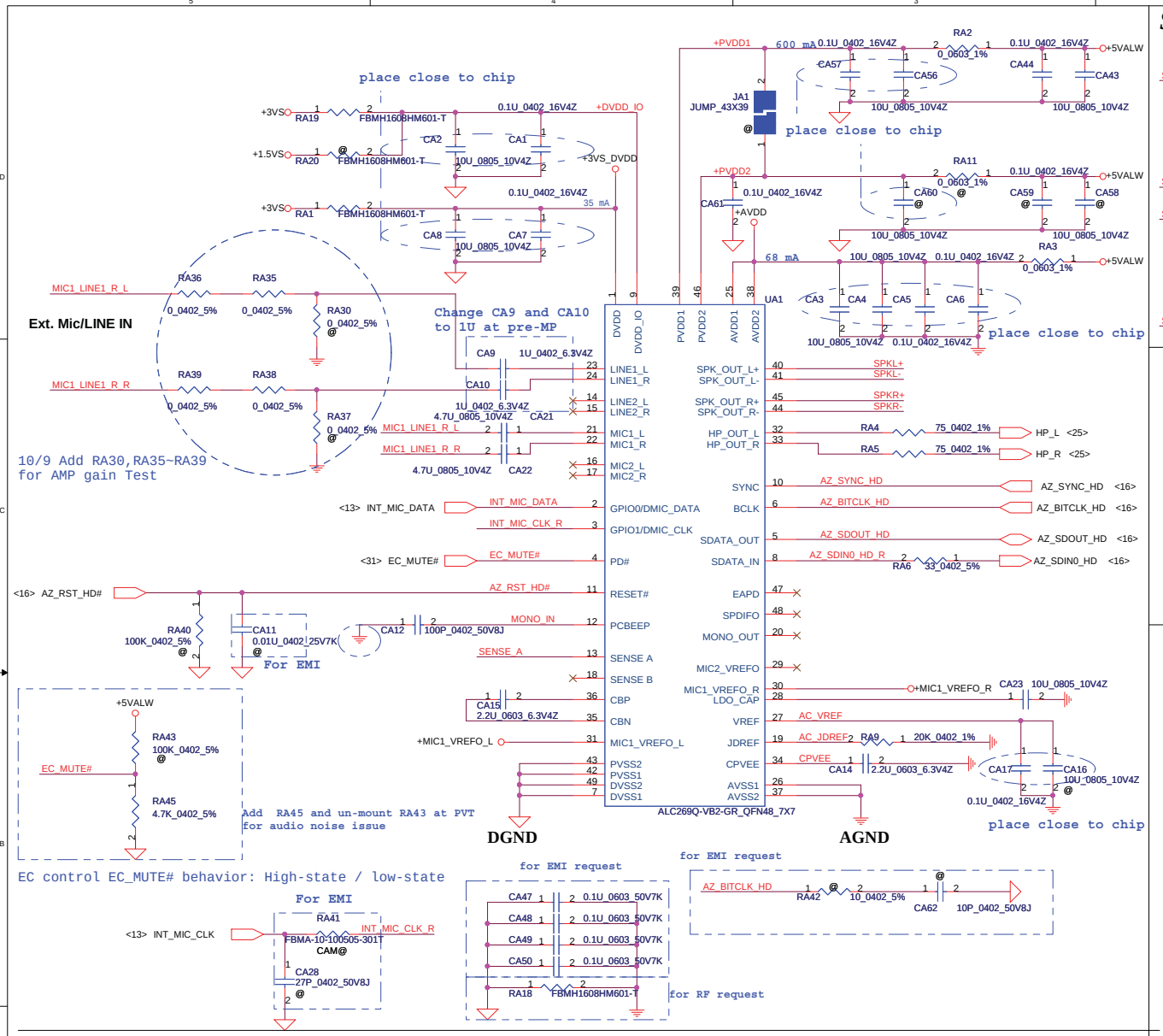

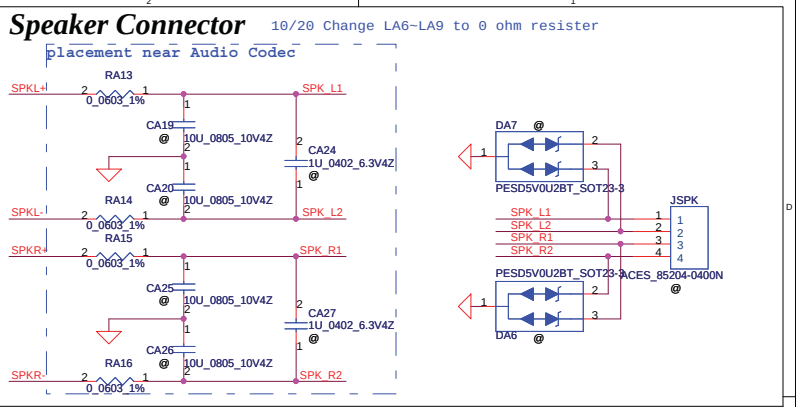

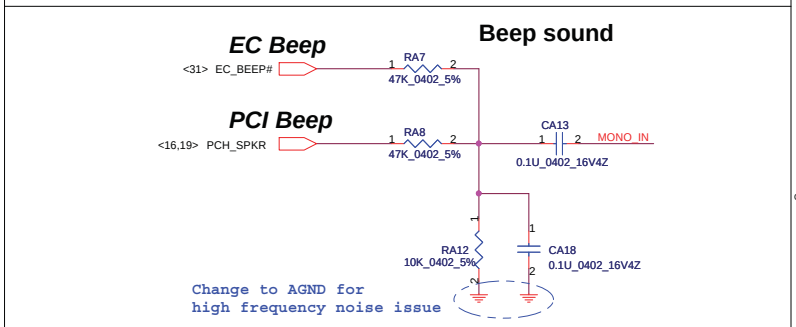

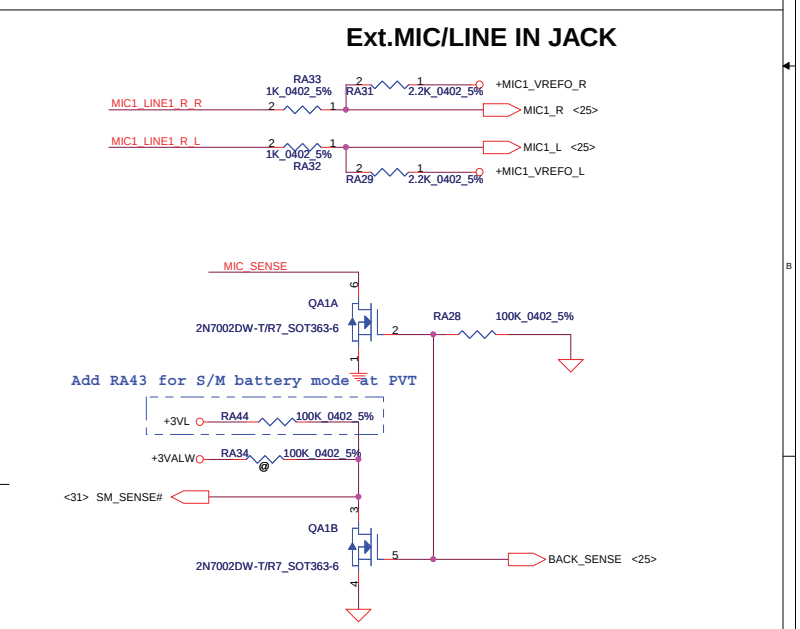

Sense Pin	Impedance	Codec Signals	Function
SENSE A	39.2K	PORT-I (PIN 32, 33)	Headphone out
	20K	PORT-B (PIN 21, 22)	Ext. MIC
	10K	PORT-C (PIN 23, 24)	
	5.1K	(PIN 48)	
SENSE B	39.2K	PORT-E (PIN 14, 15)	
	20K	PORT-F (PIN 16, 17)	
	10K	PORT-H (PIN 20)	

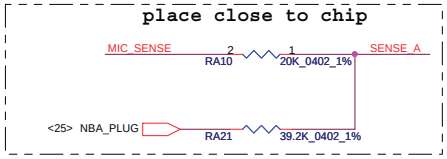

Security Classification	Compal Secret Data		
Issued Date	200910/9	Deciphered Date	2010/01/23

THIS SHEET OF ENGINEERING DRAWING IS THE PROPRIETARY PROPERTY OF COMPAL ELECTRONICS, INC. AND CONTAINS CONFIDENTIAL AND TRADE SECRET INFORMATION. THIS SHEET MAY NOT BE TRANSFERED FROM THE CUSTODY OF THE COMPETENT DIVISION OF R&D DEPARTMENT EXCEPT AS AUTHORIZED BY COMPAL ELECTRONICS, INC. NEITHER THIS SHEET NOR THE INFORMATION IT CONTAINS MAY BE USED BY OR DISCLOSED TO ANY THIRD PARTY WITHOUT PRIOR WRITTEN CONSENT OF COMPAL ELECTRONICS, INC.

Compal Electronics, Inc.

Title: HDA CODEC ALC269

Size | Document Number: NWQAA LA6061P M/B | Rev 2.0

Date: Wednesday, March 24, 2010 | Sheet 30 of 45

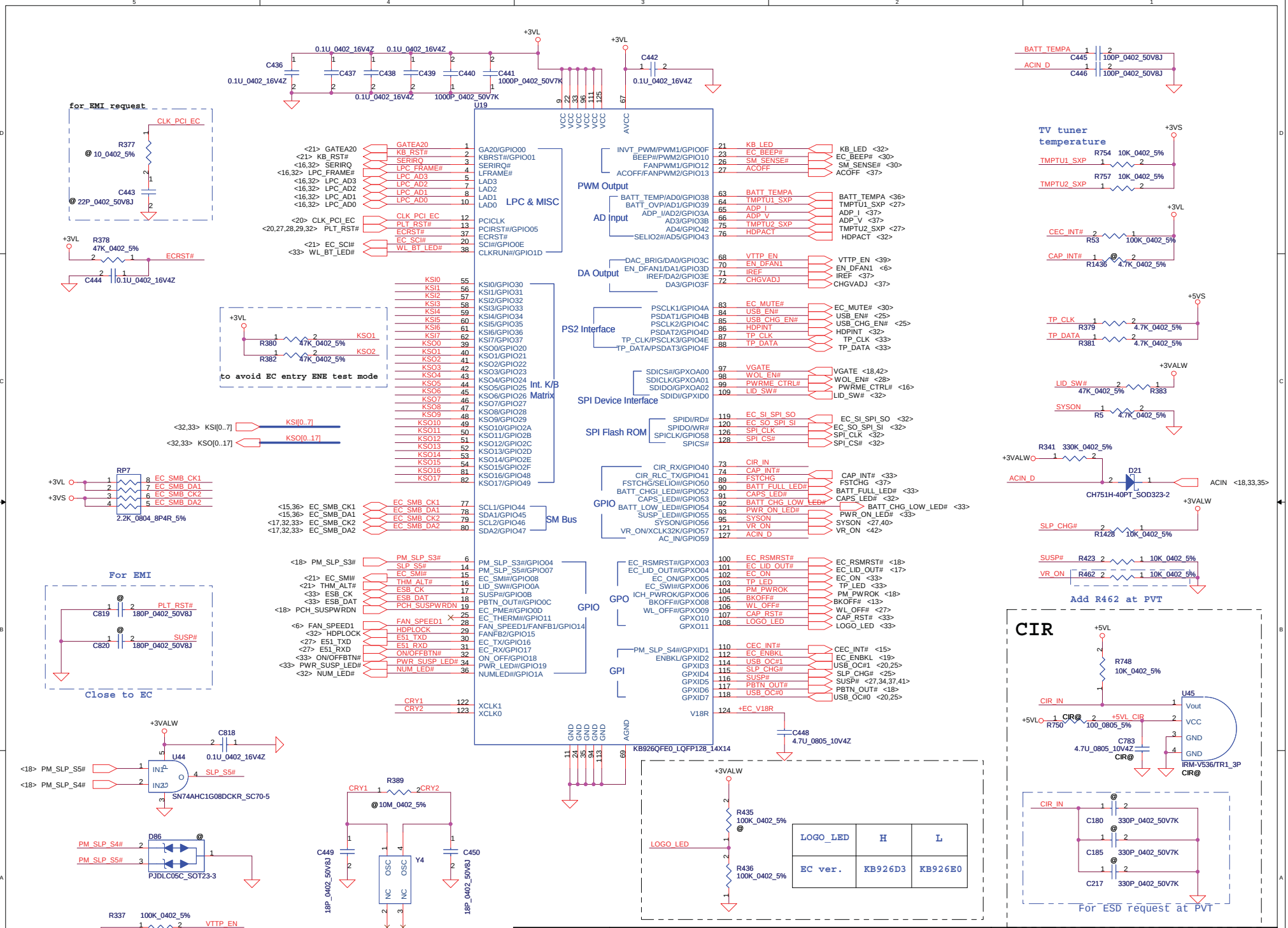

LOGO_LED	H	L
EC ver.	KB926D3	KB926E0

Security Classification	Compal Secret Data		
Issued Date	2009/10/05	Deciphered Date	2010/01/23

THIS SHEET OF ENGINEERING DRAWING IS THE PROPRIETARY PROPERTY OF COMPAL ELECTRONICS, INC. AND CONTAINS CONFIDENTIAL AND TRADE SECRET INFORMATION. THIS SHEET MAY NOT BE TRANSFERED FROM THE CUSTODY OF THE COMPETENT DIVISION OF R&D DEPARTMENT EXCEPT AS AUTHORIZED BY COMPAL ELECTRONICS, INC. NEITHER THIS SHEET NOR THE INFORMATION IT CONTAINS MAY BE USED BY OR DISCLOSED TO ANY THIRD PARTY WITHOUT PRIOR WRITTEN CONSENT OF COMPAL ELECTRONICS, INC.

Compal Electronics, Inc.

Title: ENE-KB926 RevD2

Size | Document Number: NWQAA LA6061P M/B | Rev: 2.0

Date: Wednesday, March 24, 2010 | Sheet 31 of 45

SPI Flash (256KB)

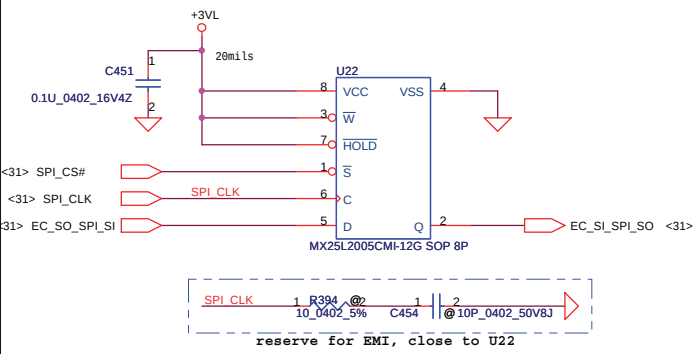

Lid SW

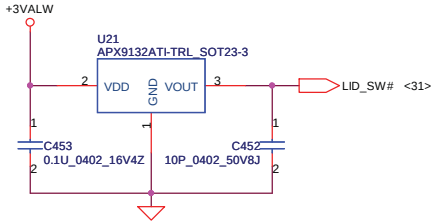

LPC Debug Port

Please place the PAD under DDR DIMM.

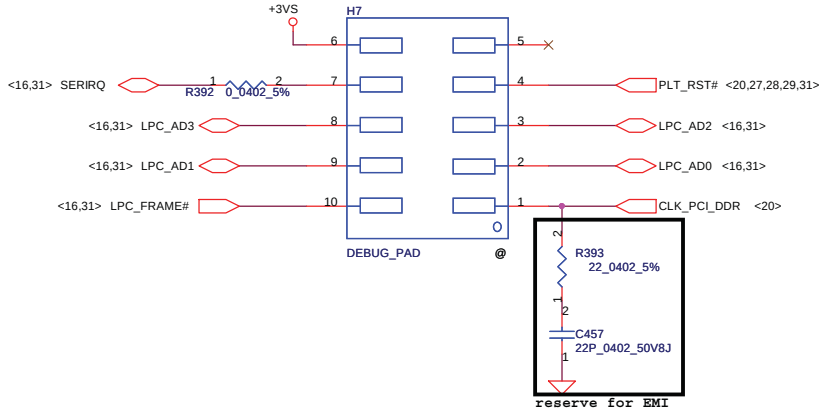

Keyboard LED

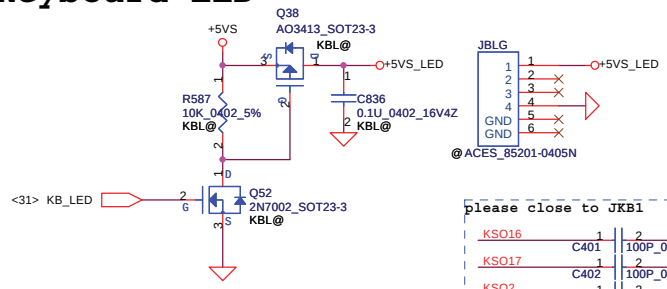

KEYBOARD CONN.

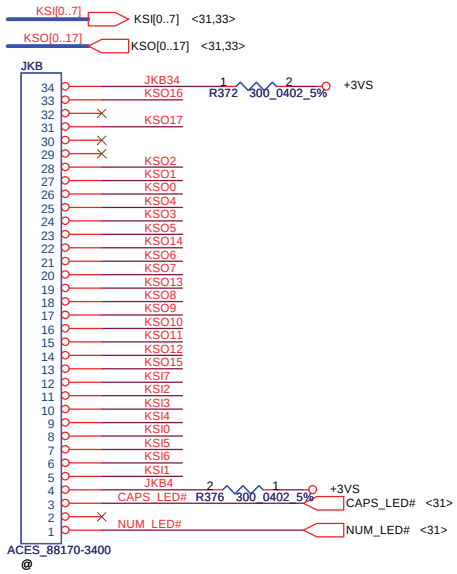

please close to JKB1

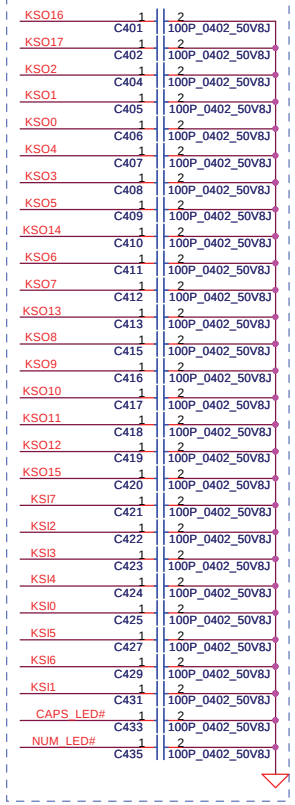

G-Sensor

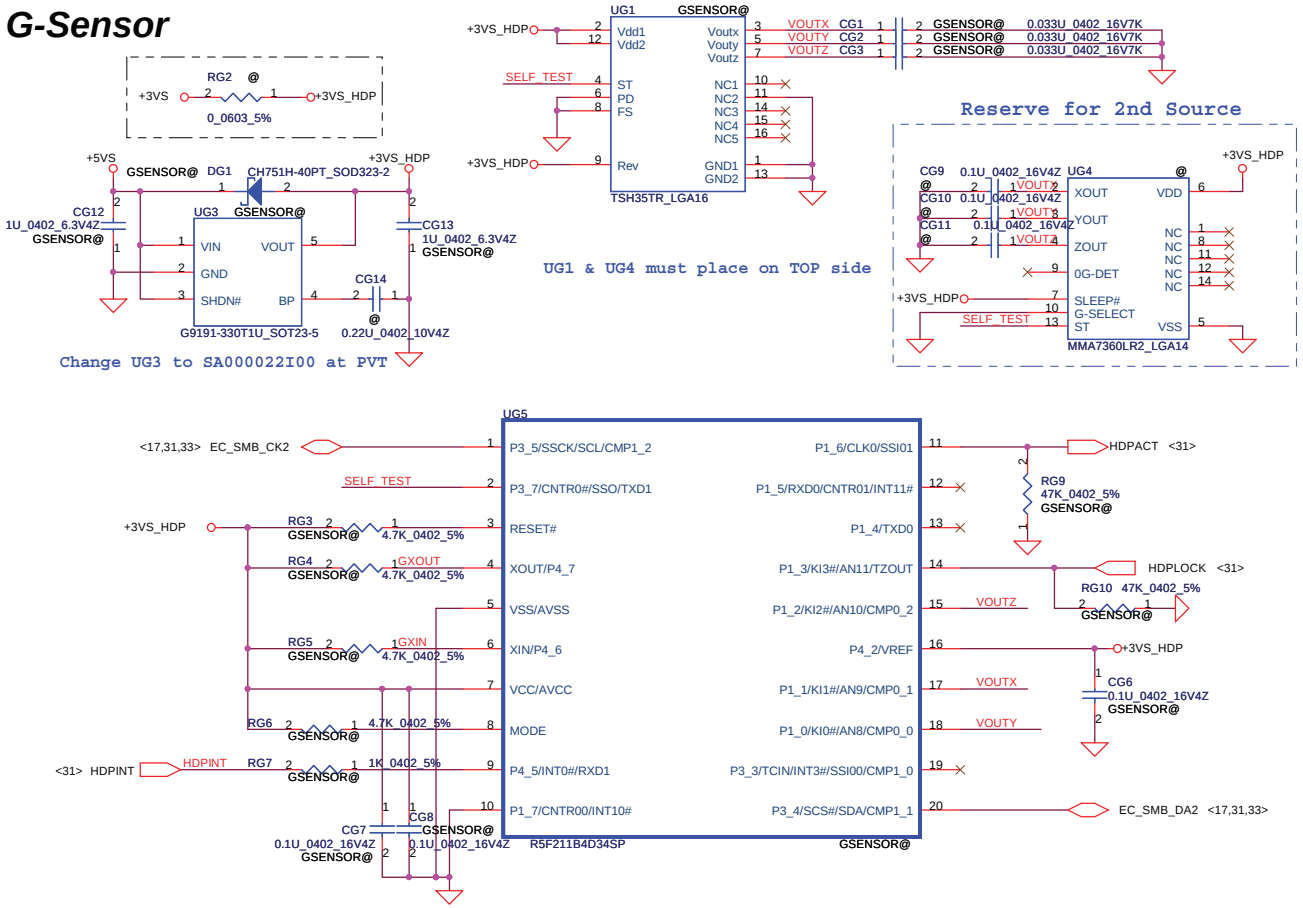

Security Classification	Compal Secret Data		
Issued Date	2009/10/05	Deciphered Date	2010/01/23

THIS SHEET OF ENGINEERING DRAWING IS THE PROPRIETARY PROPERTY OF COMPAL ELECTRONICS, INC. AND CONTAINS CONFIDENTIAL AND TRADE SECRET INFORMATION. THIS SHEET MAY NOT BE TRANSFERED FROM THE CUSTODY OF THE COMPETENT DIVISION OF R&D DEPARTMENT EXCEPT AS AUTHORIZED BY COMPAL ELECTRONICS, INC. NEITHER THIS SHEET NOR THE INFORMATION IT CONTAINS MAY BE USED BY OR DISCLOSED TO ANY THIRD PARTY WITHOUT PRIOR WRITTEN CONSENT OF COMPAL ELECTRONICS, INC.

Compal Electronics, Inc.

Title: SPI ROM/TP/KB/Debug

Size | Document Number: NWQAA LA6061P M/B | Rev 2.0

Date: Wednesday, March 24, 2010 | Sheet 32 of 45

Power Button

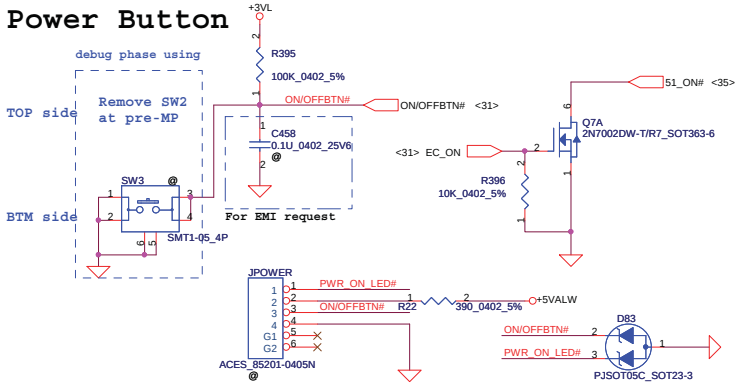

Caps Sensor/Light Sensor Conn.

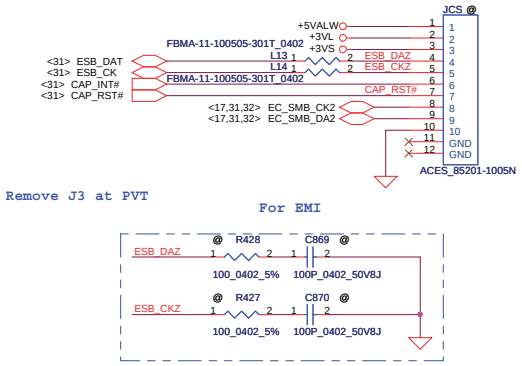

Touchpad & Light Pipe Connector

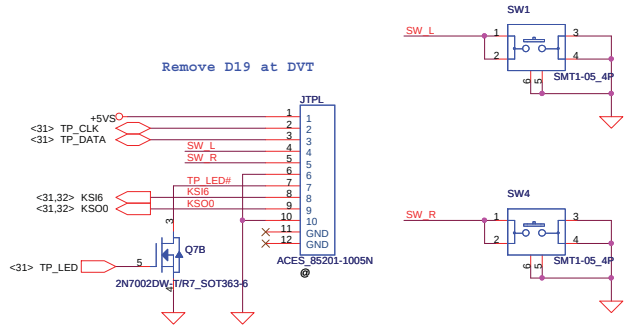

DC-IN LED

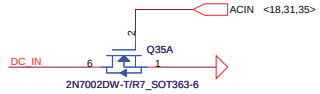

WiMAX LED

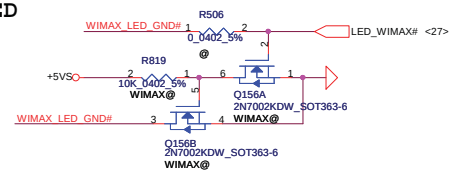

Screw Hole

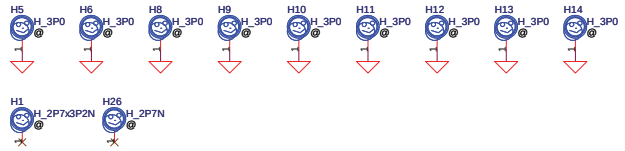

HDD LED

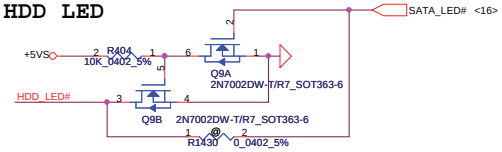

Logo LED

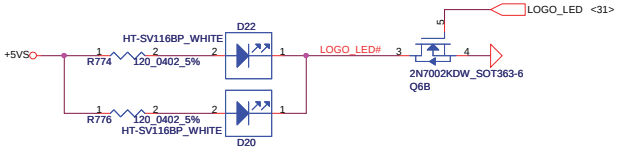

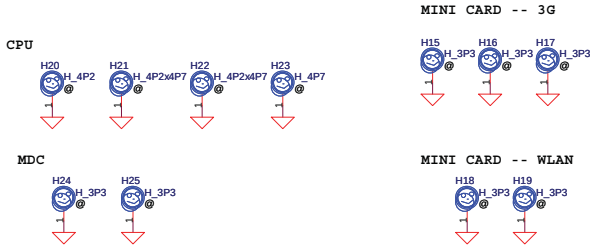

PCB Fedical Mark PAD

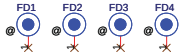

LED/B Connector

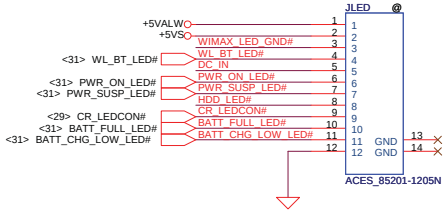

ISPD

Security Classification	Compal Secret Data		Compal Electronics, Inc.
Issued Date	2009/10/05	Deciphered Date	2010/01/23

THIS SHEET OF ENGINEERING DRAWING IS THE PROPRIETARY PROPERTY OF COMPAL ELECTRONICS, INC. AND CONTAINS CONFIDENTIAL AND TRADE SECRET INFORMATION. THIS SHEET MAY NOT BE TRANSFERED FROM THE CUSTODY OF THE COMPETENT DIVISION OF R&D DEPARTMENT EXCEPT AS AUTHORIZED BY COMPAL ELECTRONICS, INC. NEITHER THIS SHEET NOR THE INFORMATION IT CONTAINS MAY BE USED BY OR DISCLOSED TO ANY THIRD PARTY WITHOUT PRIOR WRITTEN CONSENT OF COMPAL ELECTRONICS, INC.

Title	PWR BTN/Can. Sensor/TP/LEDs	
Size	Document Number: NWQAA LA6061P M/B	Rev 2.0
Date: Wednesday, March 24, 2010	Sheet 33 of 45	

+3VALW TO +3VS

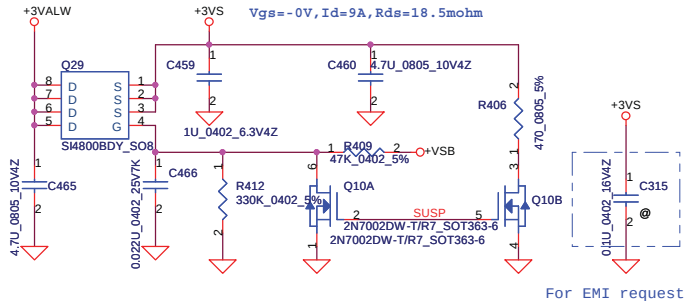

+5VALW TO +5VS

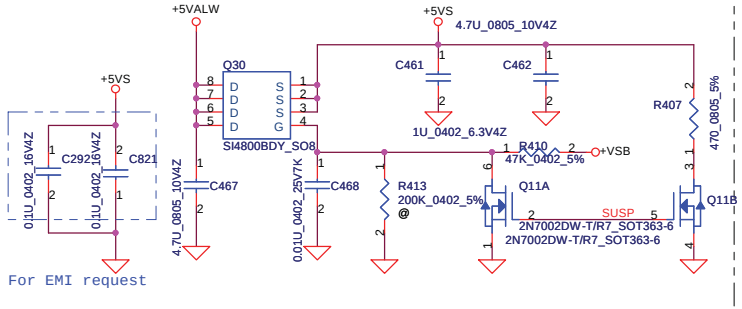

+1.5V to +1.5VS

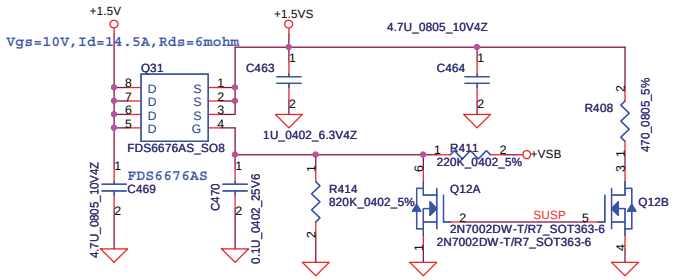

+5VS TO +5VS_ODD

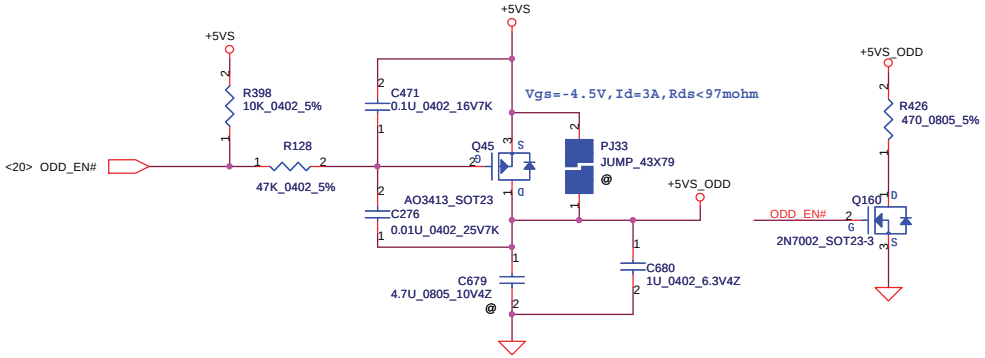

For S3 CPU Power Saving

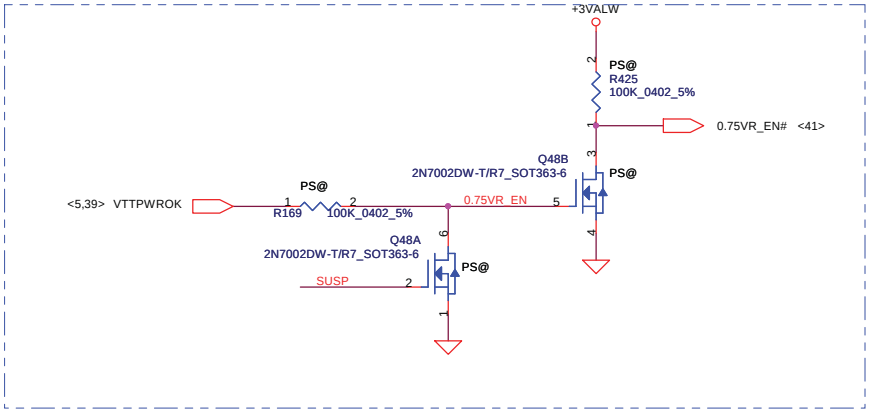

Reserve for EMI test

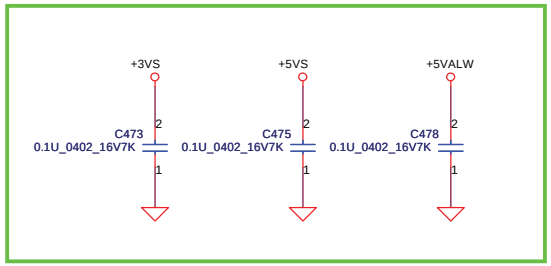

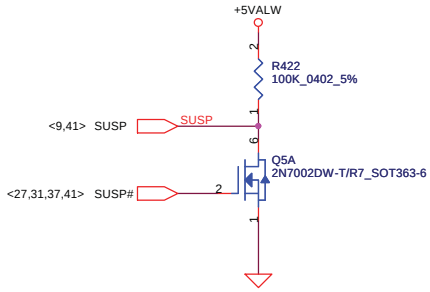

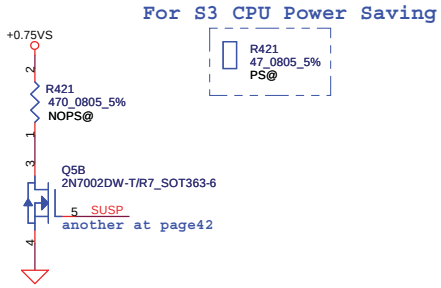

Security Classification	Compal Secret Data		
Issued Date	2009/10/05	Deciphered Date	2010/01/23

THIS SHEET OF ENGINEERING DRAWING IS THE PROPRIETARY PROPERTY OF COMPAL ELECTRONICS, INC. AND CONTAINS CONFIDENTIAL AND TRADE SECRET INFORMATION. THIS SHEET MAY NOT BE TRANSFERED FROM THE CUSTODY OF THE COMPETENT DIVISION OF R&D DEPARTMENT EXCEPT AS AUTHORIZED BY COMPAL ELECTRONICS, INC. NEITHER THIS SHEET NOR THE INFORMATION IT CONTAINS MAY BE USED BY OR DISCLOSED TO ANY THIRD PARTY WITHOUT PRIOR WRITTEN CONSENT OF COMPAL ELECTRONICS, INC.

Compal Electronics, Inc.

Title: DC-DC INTERFACE

Size | Document Number: NWQAA LA6061P M/B | Rev: 2.0

Date: Wednesday, March 24, 2010 | Sheet 34 of 45

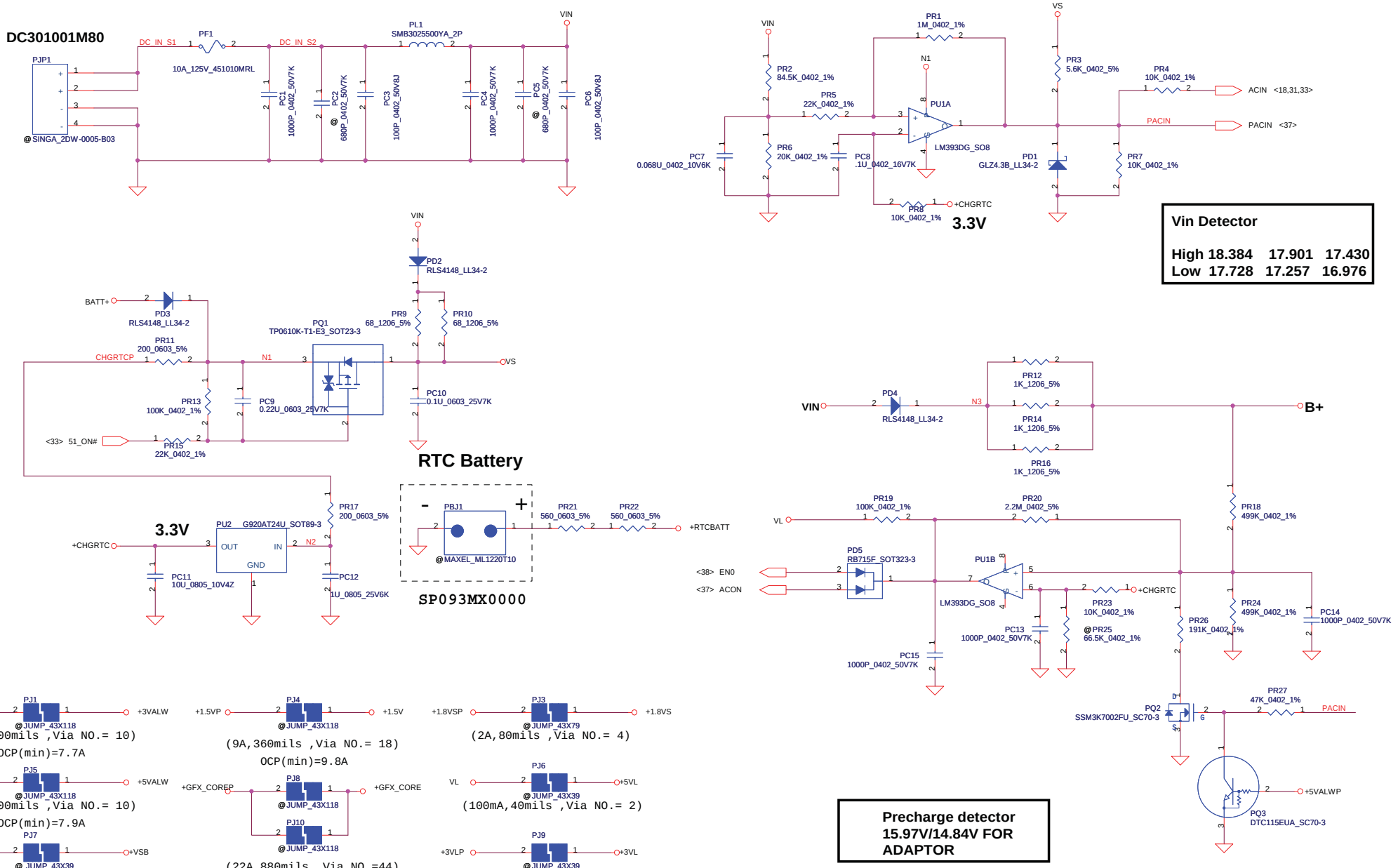

Security Classification	Compal Secret Data			Compal Electronics, Inc.
Issued Date	2009/01/23	Deciphered Date	2010/01/23	Title: DCIN / DETECTOR
				Size: Document Number: NWQAA LA6061P M/B Rev 2.0
				Date: Wednesday, March 24, 2010 Sheet 35 of 45

THIS SHEET OF ENGINEERING DRAWING IS THE PROPRIETARY PROPERTY OF COMPAL ELECTRONICS, INC. AND CONTAINS CONFIDENTIAL AND TRADE SECRET INFORMATION. THIS SHEET MAY NOT BE TRANSFERED FROM THE CUSTODY OF THE COMPETENT DIVISION OF R&D DEPARTMENT EXCEPT AS AUTHORIZED BY COMPAL ELECTRONICS, INC. NEITHER THIS SHEET NOR THE INFORMATION IT CONTAINS MAY BE USED BY OR DISCLOSED TO ANY THIRD PARTY WITHOUT PRIOR WRITTEN CONSENT OF COMPAL ELECTRONICS, INC.

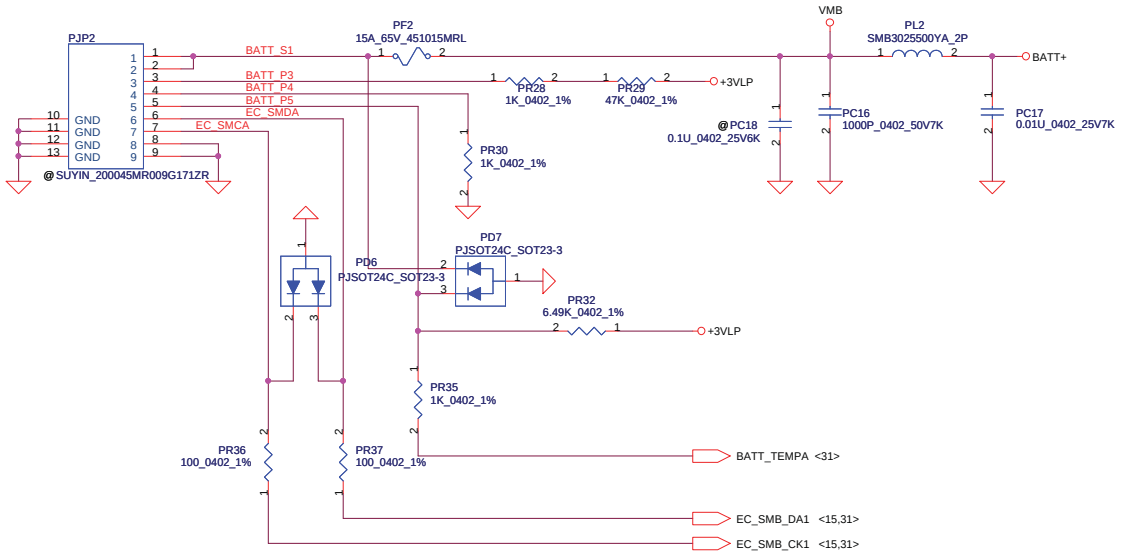

PH1 under CPU botten side :
CPU thermal protection at 95degree C
Recovery at 56 degree C

PH2 near main Battery CONN :
BAT. thermal protection at 95 degree C
Recovery at 48 degree C

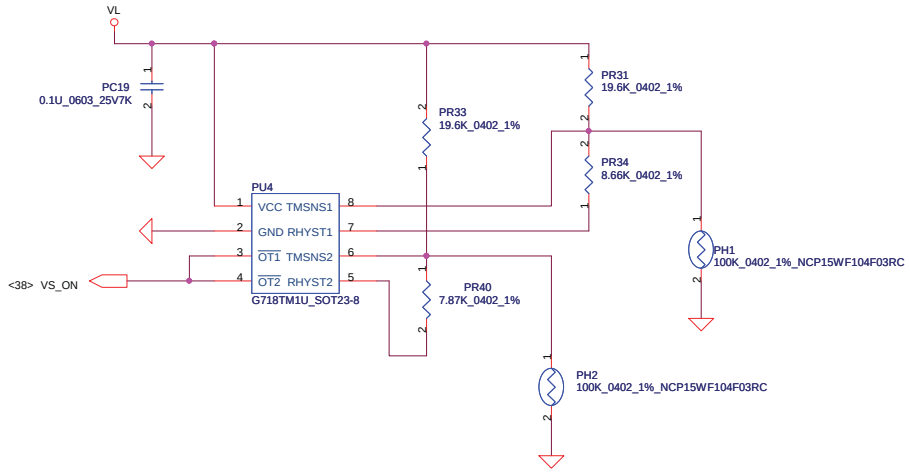

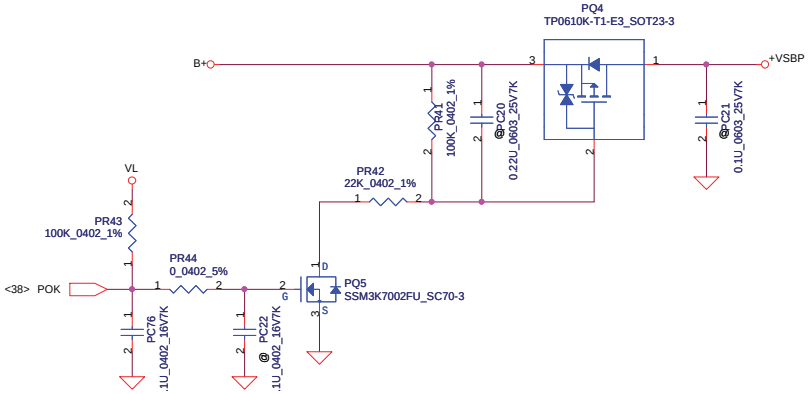

Security Classification	Compal Secret Data		
Issued Date	2009/01/23	Deciphered Date	2010/01/23

THIS SHEET OF ENGINEERING DRAWING IS THE PROPRIETARY PROPERTY OF COMPAL ELECTRONICS, INC. AND CONTAINS CONFIDENTIAL AND TRADE SECRET INFORMATION. THIS SHEET MAY NOT BE TRANSFERED FROM THE CUSTODY OF THE COMPETENT DIVISION OF R&D DEPARTMENT EXCEPT AS AUTHORIZED BY COMPAL ELECTRONICS, INC. NEITHER THIS SHEET NOR THE INFORMATION IT CONTAINS MAY BE USED BY OR DISCLOSED TO ANY THIRD PARTY WITHOUT PRIOR WRITTEN CONSENT OF COMPAL ELECTRONICS, INC.

Compal Electronics, Inc.

Title: BATTERY CONN / OTP

Size | Document Number: NWQAA LA6061P M/B | Rev 2.0

Date: Wednesday, March 24, 2010 | Sheet 36 of 45

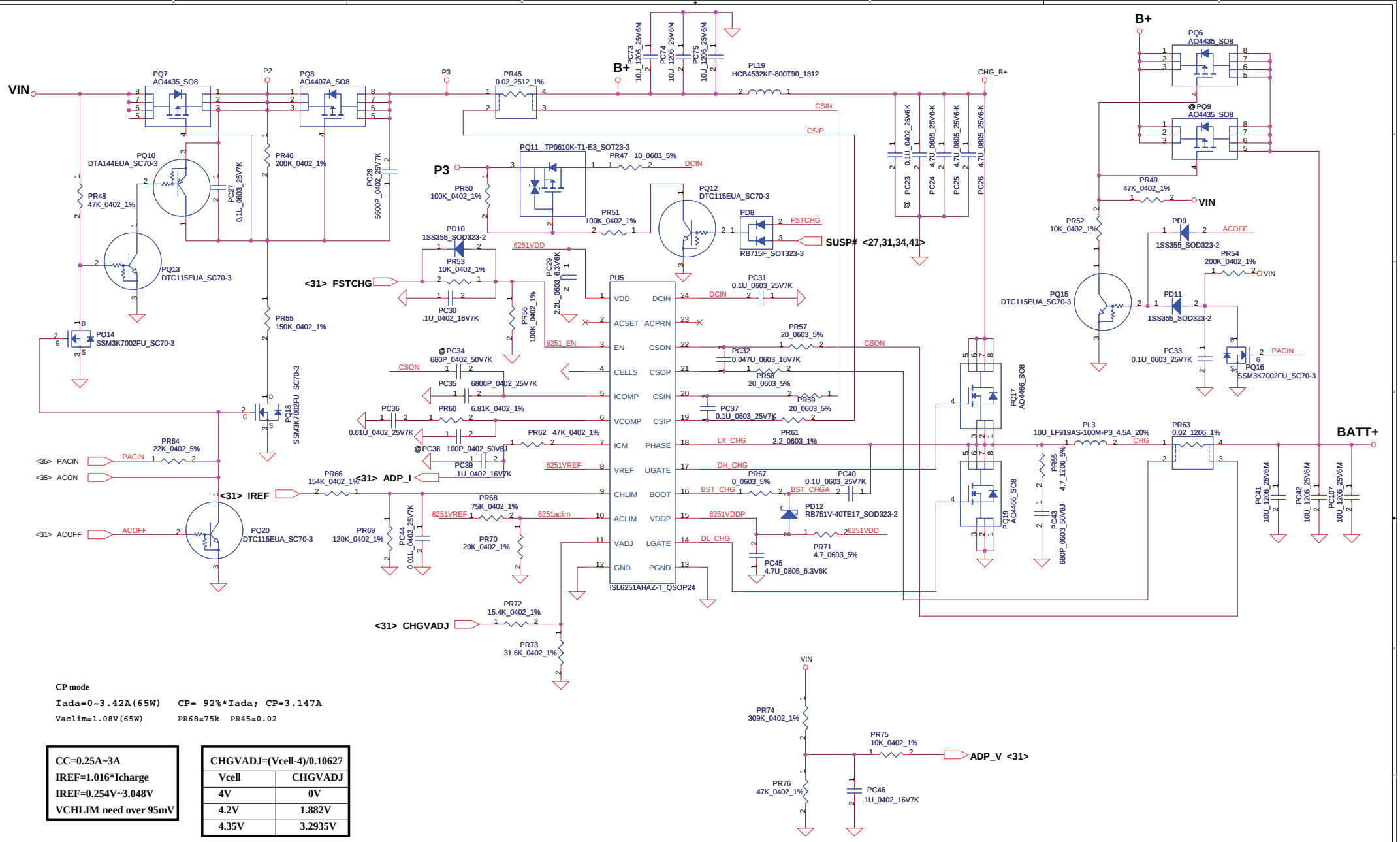

CP mode

Iada=0~3.42A(65W) CP= 92%*Iada; CP=3.147A

Vaclim=1.08V(65W) PR68=75k PR45=0.02

CC=0.25A~3A
IREF=1.016*Icharge
IREF=0.254V~3.048V
VCHLIM need over 95mV

CHGVADJ=(Vcell-4)/0.10627

Vcell	CHGVADJ
4V	0V
4.2V	1.882V
4.35V	3.2935V

Security Classification	Compal Secret Data		
Issued Date	2009/01/23	Deciphered Date	2010/01/23

THIS SHEET OF ENGINEERING DRAWING IS THE PROPRIETARY PROPERTY OF COMPAL ELECTRONICS, INC. AND CONTAINS CONFIDENTIAL AND TRADE SECRET INFORMATION. THIS SHEET MAY NOT BE TRANSFERED FROM THE CUSTODY OF THE COMPETENT DIVISION OF R&D DEPARTMENT EXCEPT AS AUTHORIZED BY COMPAL ELECTRONICS, INC. NEITHER THIS SHEET NOR THE INFORMATION IT CONTAINS MAY BE USED BY OR DISCLOSED TO ANY THIRD PARTY WITHOUT PRIOR WRITTEN CONSENT OF COMPAL ELECTRONICS, INC.

Compal Electronics, Inc.

Title: CHARGER

Size | Document Number: NWQAA LA6061P M/B | Rev 2.0

Date: Wednesday, March 24, 2010 | Sheet 37 of 45

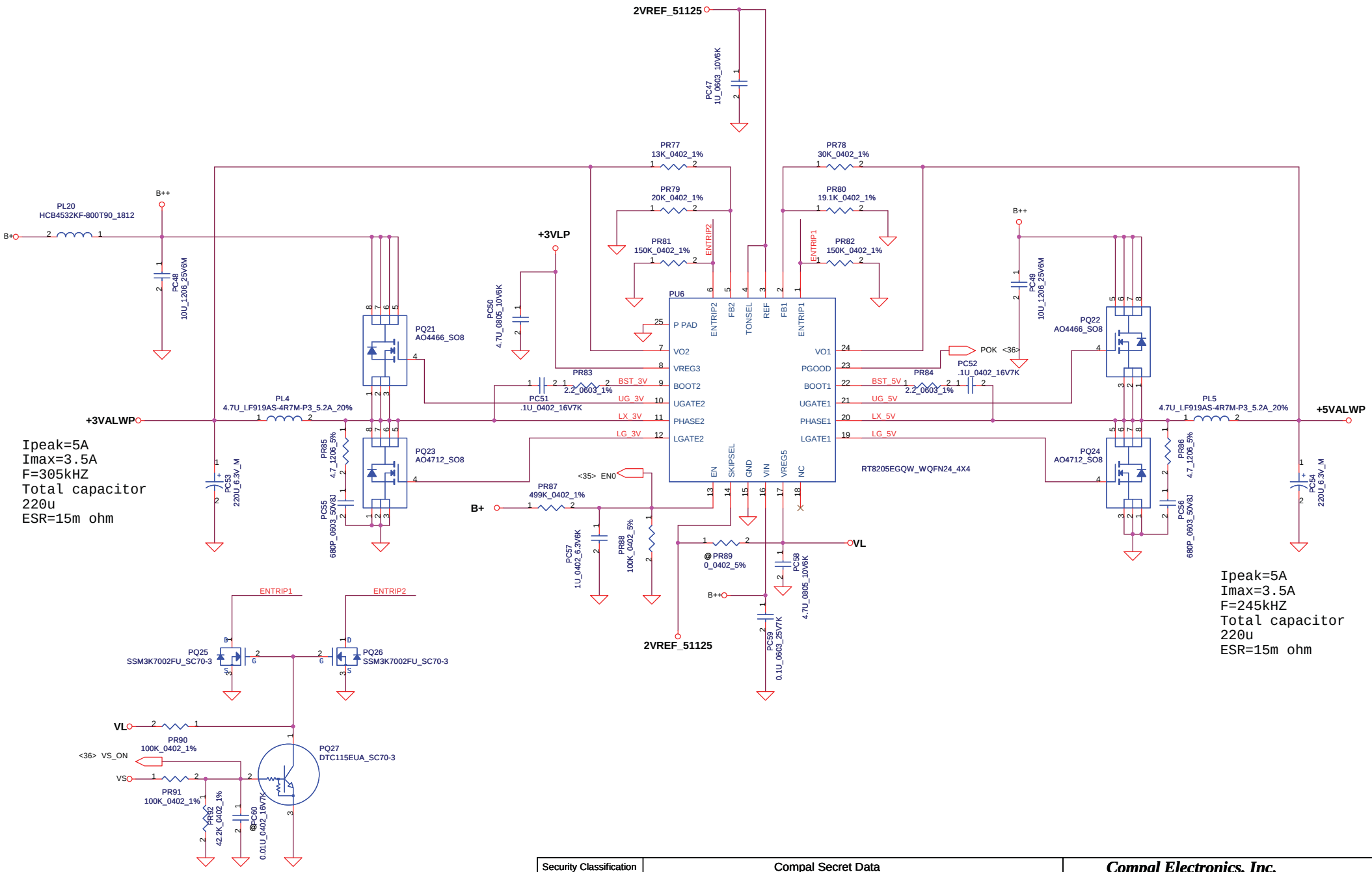

Security Classification	Compal Secret Data		
Issued Date	2009/01/23	Deciphered Date	2010/01/23

THIS SHEET OF ENGINEERING DRAWING IS THE PROPRIETARY PROPERTY OF COMPAL ELECTRONICS, INC. AND CONTAINS CONFIDENTIAL AND TRADE SECRET INFORMATION. THIS SHEET MAY NOT BE TRANSFERED FROM THE CUSTODY OF THE COMPETENT DIVISION OF R&D DEPARTMENT EXCEPT AS AUTHORIZED BY COMPAL ELECTRONICS, INC. NEITHER THIS SHEET NOR THE INFORMATION IT CONTAINS MAY BE USED BY OR DISCLOSED TO ANY THIRD PARTY WITHOUT PRIOR WRITTEN CONSENT OF COMPAL ELECTRONICS, INC.

Compal Electronics, Inc.

Title: 3VALWP/5VALWP

Size: | Document Number: NWQAA LA6061P M/B | Rev: 2.0

Date: Wednesday, March 24, 2010 | Sheet 38 of 45

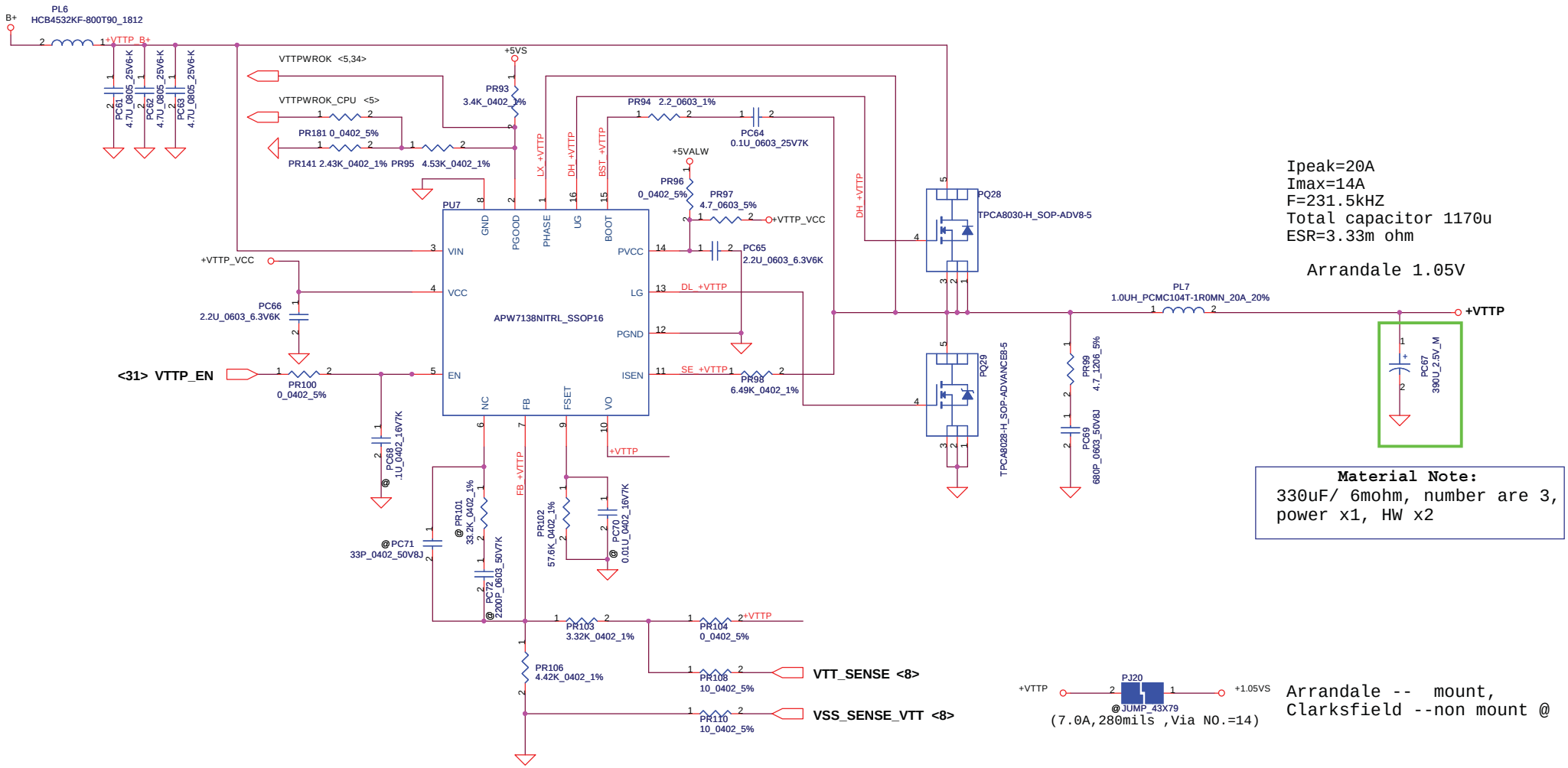

Security Classification	Compal Secret Data		
Issued Date	2009/01/23	Deciphered Date	2010/01/23

THIS SHEET OF ENGINEERING DRAWING IS THE PROPRIETARY PROPERTY OF COMPAL ELECTRONICS, INC. AND CONTAINS CONFIDENTIAL AND TRADE SECRET INFORMATION. THIS SHEET MAY NOT BE TRANSFERED FROM THE CUSTODY OF THE COMPETENT DIVISION OF R&D DEPARTMENT EXCEPT AS AUTHORIZED BY COMPAL ELECTRONICS, INC. NEITHER THIS SHEET NOR THE INFORMATION IT CONTAINS MAY BE USED BY OR DISCLOSED TO ANY THIRD PARTY WITHOUT PRIOR WRITTEN CONSENT OF COMPAL ELECTRONICS, INC.

Compal Electronics, Inc.

Title: +VTTP

Size | Document Number: NWQAA LA6061P M/B | Rev 2.0

Date: Wednesday, March 24, 2010 | Sheet 39 of 45

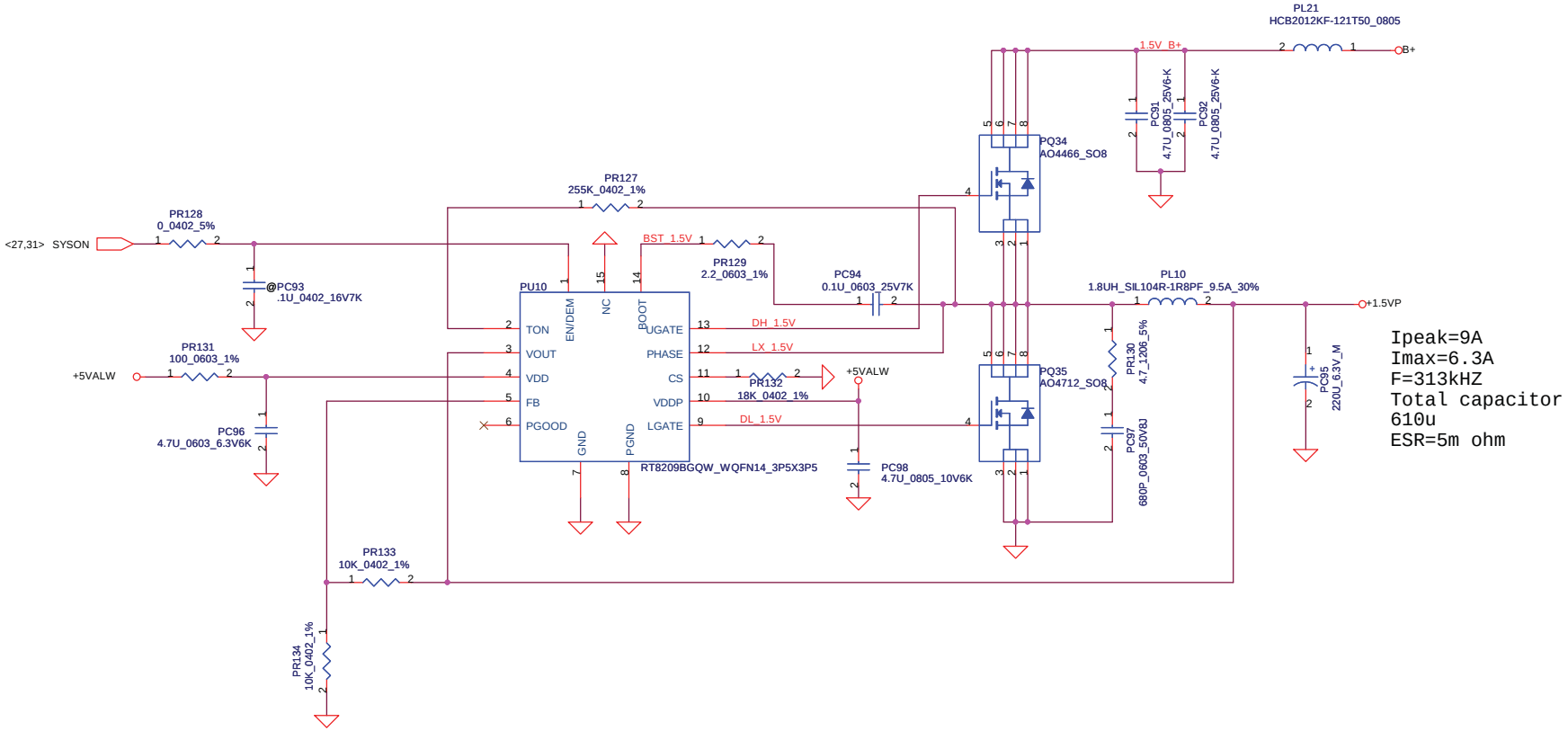

Ipeak=9A
Imax=6.3A
F=313kHZ
Total capacitor
610u
ESR=5m ohm

Security Classification	Compal Secret Data		
Issued Date	2009/01/23	Deciphered Date	2010/01/23

THIS SHEET OF ENGINEERING DRAWING IS THE PROPRIETARY PROPERTY OF COMPAL ELECTRONICS, INC. AND CONTAINS CONFIDENTIAL AND TRADE SECRET INFORMATION. THIS SHEET MAY NOT BE TRANSFERED FROM THE CUSTODY OF THE COMPETENT DIVISION OF R&D DEPARTMENT EXCEPT AS AUTHORIZED BY COMPAL ELECTRONICS, INC. NEITHER THIS SHEET NOR THE INFORMATION IT CONTAINS MAY BE USED BY OR DISCLOSED TO ANY THIRD PARTY WITHOUT PRIOR WRITTEN CONSENT OF COMPAL ELECTRONICS, INC.

Compal Electronics, Inc.

Title: **+1.5VP**

Size: Custom | Document Number: NWQAA LA6061P M/B | Rev: 2.0

Date: Wednesday, March 24, 2010 | Sheet 40 of 45

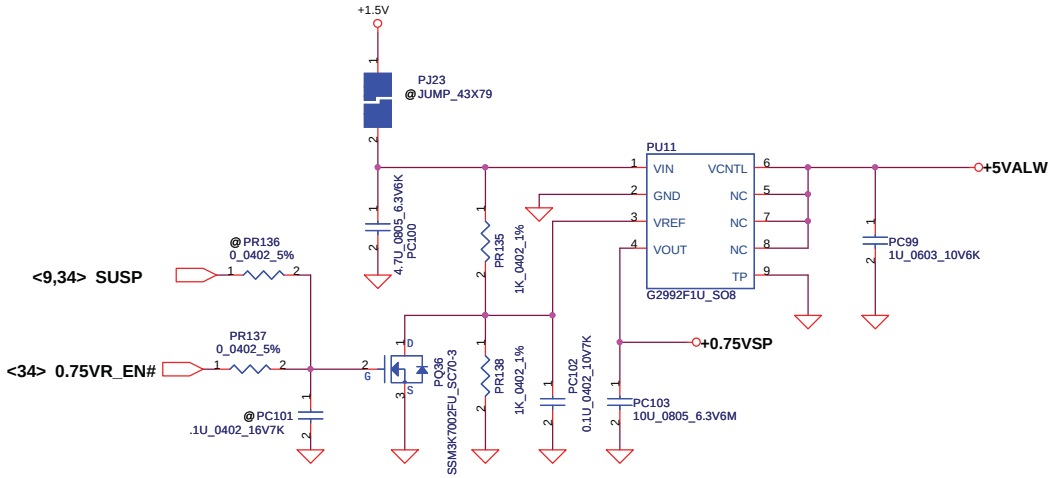

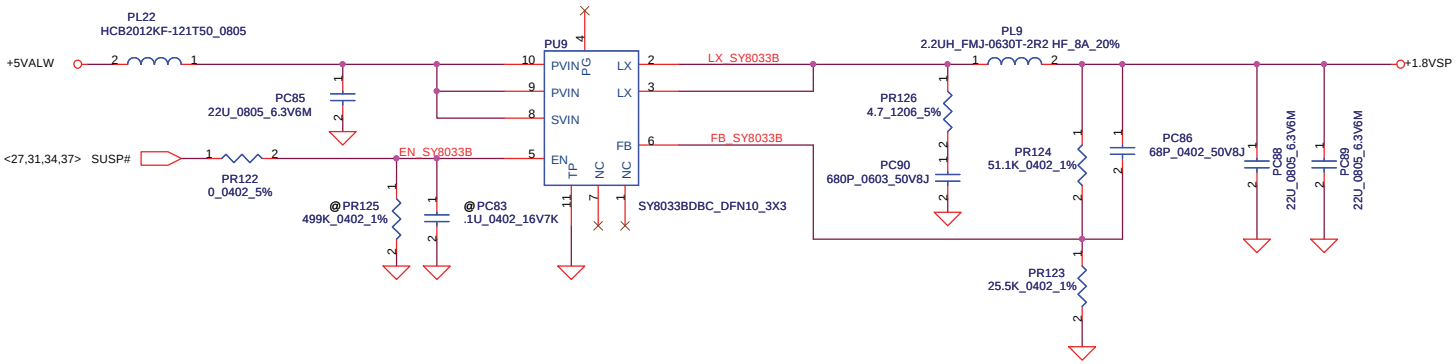

Security Classification	Compal Secret Data		
Issued Date	2009/01/23	Deciphered Date	2010/01/23

THIS SHEET OF ENGINEERING DRAWING IS THE PROPRIETARY PROPERTY OF COMPAL ELECTRONICS, INC. AND CONTAINS CONFIDENTIAL AND TRADE SECRET INFORMATION. THIS SHEET MAY NOT BE TRANSFERED FROM THE CUSTODY OF THE COMPETENT DIVISION OF R&D DEPARTMENT EXCEPT AS AUTHORIZED BY COMPAL ELECTRONICS, INC. NEITHER THIS SHEET NOR THE INFORMATION IT CONTAINS MAY BE USED BY OR DISCLOSED TO ANY THIRD PARTY WITHOUT PRIOR WRITTEN CONSENT OF COMPAL ELECTRONICS, INC.

Compal Electronics, Inc.

Title: 0.75VSP/+1.8VSP

Size | Document Number: NWQAA LA6061P M/B | Rev 2.0

Date: Wednesday, March 24, 2010 | Sheet 41 of 45

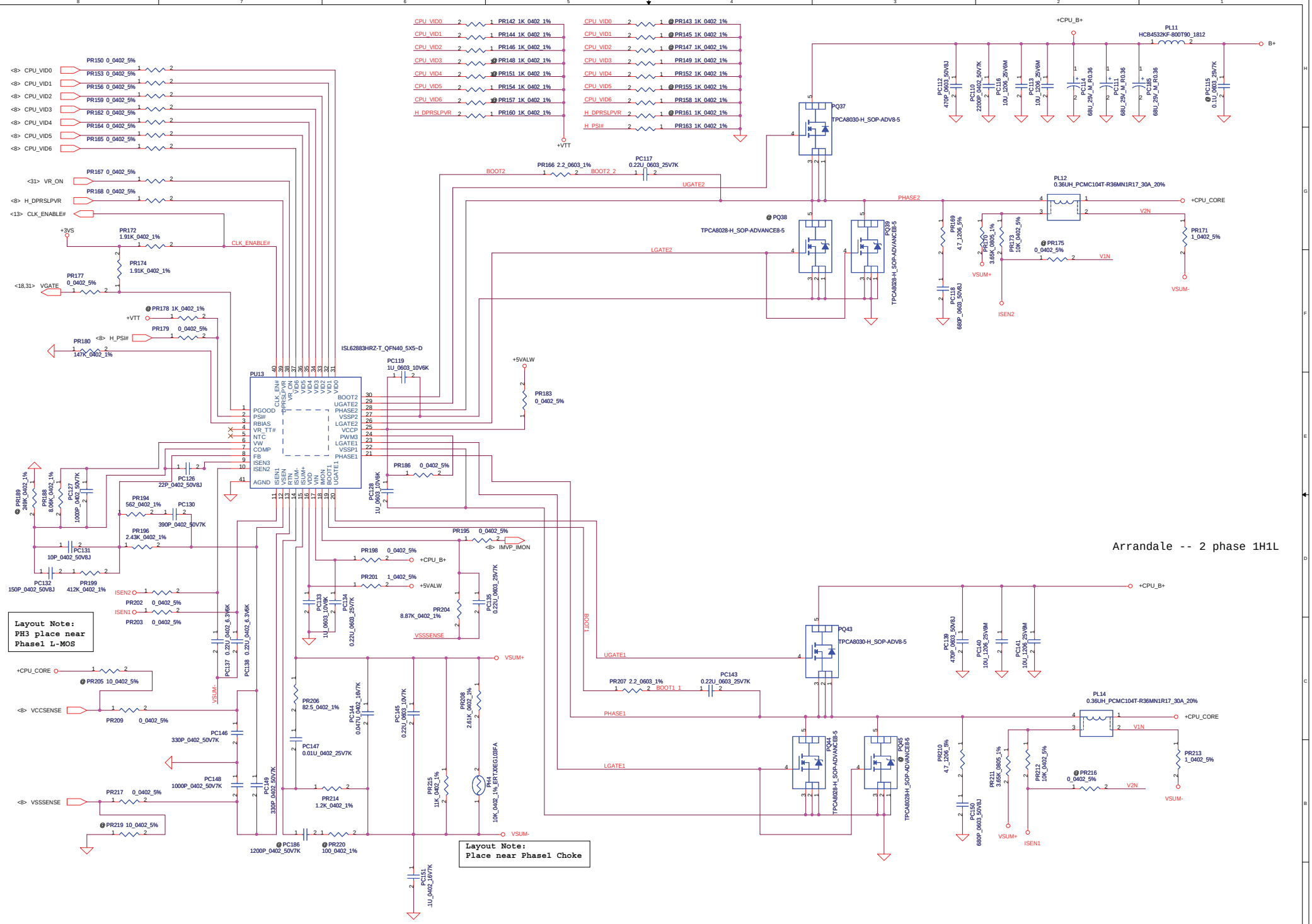

Security Classification	Compal Secret Data			Compal Electronics, Inc.
Issued Date	2009/01/23	Deciphered Date	2010/01/23	Title: +CPU_CORE
				Size: C; Document Number: NWQAA LA6061P M/B; Rev: 2.0
				Date: Wednesday, March 24, 2010; Sheet 42 of 45

THIS SHEET OF ENGINEERING DRAWING IS THE PROPRIETARY PROPERTY OF COMPAL ELECTRONICS, INC. AND CONTAINS CONFIDENTIAL AND TRADE SECRET INFORMATION. THIS SHEET MAY NOT BE TRANSFERED FROM THE CUSTODY OF THE COMPETENT DIVISION OF R&D DEPARTMENT EXCEPT AS AUTHORIZED BY COMPAL ELECTRONICS, INC. NEITHER THIS SHEET NOR THE INFORMATION IT CONTAINS MAY BE USED BY OR DISCLOSED TO ANY THIRD PARTY WITHOUT PRIOR WRITTEN CONSENT OF COMPAL ELECTRONICS, INC.

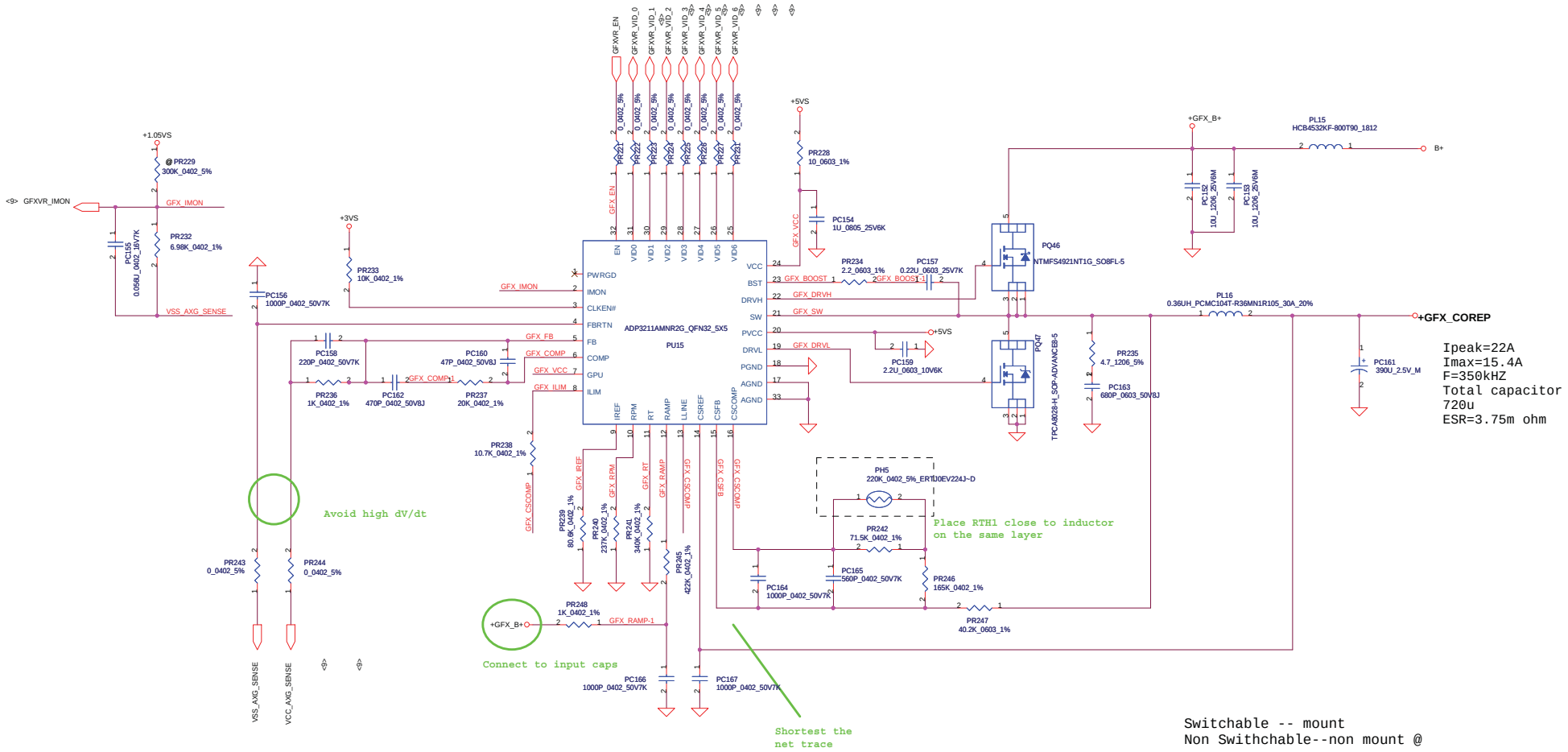

Security Classification	Compal Secret Data			Compal Electronics, Inc.
Issued Date	2009/10/02	Deciphered Date	2010/10/02	Title: +GFX_COREP
				Size / Document Number: NWQAA LA6061P M/B — Rev 2.0
				Date: Wednesday, March 24, 2010 — Sheet 43 of 45

THIS SHEET OF ENGINEERING DRAWING IS THE PROPRIETARY PROPERTY OF COMPAL ELECTRONICS, INC. AND CONTAINS CONFIDENTIAL AND TRADE SECRET INFORMATION. THIS SHEET MAY NOT BE TRANSFERED FROM THE CUSTODY OF THE COMPETENT DIVISION OF R&D DEPARTMENT EXCEPT AS AUTHORIZED BY COMPAL ELECTRONICS, INC. NEITHER THIS SHEET NOR THE INFORMATION IT CONTAINS MAY BE USED BY OR DISCLOSED TO ANY THIRD PARTY WITHOUT PRIOR WRITTEN CONSENT OF COMPAL ELECTRONICS, INC.

NO	DATE	PAGE	MODIFICATION LIST	PURPOSE
EVT		P39-PWR_+VTTP	Change PR141 2.26k to 2.43k	Modify VTTPWROK voltage (2009/11/25)
EVT		P39-PWR_+VTTP	Remove PC71 33P, PC72 2200P, PR101 33.2k	APW7138 not use this function (2009/11/25)
EVT		P38-PWR_3VALWP/5VALWP	Change PR92 49.9k to 42.2k	Modify VS divider voltage to drive MOS (2009/11/25)
EVT		P42-PWR_CPU_CORE	Change PL12,PL14 SH000005680 to SH00000IK00	Use 5% DCR choke (2009/11/25)
EVT		P43-PWR_GM VGA_CORE	Change PH5 SL20000058L to SL200000500	Use Compal PN (2009/11/25)
DVT		P48-PWR_BATTERY CONN / OTP	Add PD6, PD7 ESD diode	For ESD solution(2009/12/28)
DVT		P43-PWR_GM VGA_CORE	Change PL16 SH00000HK00 to SH00000IK00	Use same PN choke (2009/12/28)
DVT		P42-PWR_CPU_CORE	Change PC114, PC111, PC185 from SF000000F80 to SF000000W00	Cost down (2009/12/28)
DVT		P43-PWR_GM VGA_CORE	Change PC161 to SGA00002680	For DVT budding(thermal issue), it will change to original type for PVT (2009/12/28)
DVT		P50-PWR_3VALWP/5VALWP	Change PR83,PR84 0 to 2.2	Add boost resistor(For EMI solution)(2009/12/28)
			Add PR85,PR86 4.7 and PC55,PC56 680P	Add snubber(For EMI solution)(2009/12/28)
DVT		P42-PWR_CPU_CORE	Change PR166,PR207 0 to 2.2	
			Add PR169,PR210 4.7 and PC118,PC150 680P	
DVT		P55-PWR_GM VGA_CORE	Change PR234 0 to 2.2	Add boost resistor(For EMI solution)(2009/12/28)
			Add PR235 4.7 and PC163 680P	Add snubber(For EMI solution)(2009/12/28)
DVT		P48-PWR_BATTERY CONN / OTP	Change PR33 10k,PR31 21k to 19.6k, PR34 9.53k to 8.66k, PR40 47k to 7.87k	Adjust OTP setting point(2009/12/28)
DVT		P39-PWR_+VTTP	Change PR98 4.99k to 6.49k	Adjust VTT_DIS OCP to 27.49A (2009/12/31)
DVT		P49-PWR_CHARGER	Add PC73,PC74,PC75 10U	Reserve for EMI solution(2009/12/28)
DVT		P42-PWR_CPU_CORE	Change PR204 8.25k to 8.87k	Adjust resistor for Imon (2009/12/31)
DVT		P55-PWR_GM VGA_CORE	Change PR247 34.8k to 40.2k	Adjust GFX load line (2009/12/31)
DVT		P41-PWR_0.75VSP/1.8VSP	Change PC90 SE025681K80 to SE024681J80	Use same PN (2009/12/31)
PVT		P41-PWR_0.75VSP/1.8VSP	Remove PR136, Add PR137 0 Ohm	For S3 power saving function (2010/02/03)
PVT		P43-PWR_GM VGA_CORE	Change PC161 to SF000002O00	Change to original type for PVT (2010/02/03)
PVT		P49-PWR_CHARGER	Change PC24,PC25,PC26 4.7U to 10U	For EMI solution(ISN test) (2010/02/03)
PVT		P49-PWR_CHARGER	Add PC107 10U	For EMI solution(ISN test) (2010/02/03)
PVT		P49-PWR_CHARGER	Add PC73,PC74,PC75 10U	For EMI solution(ISN test) (2010/02/03)
PVT		P49-PWR_CHARGER	Add PC76 0.1U	For ESD solution (2010/02/03)
PVT		P38-PWR_3VALWP/5VALWP	Change PQ27 from SSMK7002 to DTC115EUA	Use low Vth Transistor (2010/02/03)
PVT		P43-PWR_GM VGA_CORE	Change PQ46 TPCA8030 to NTMFS4921NHT1G	For EMI solution (2010/02/03)
Pre MP		P52-PWR_1.05VSP/1.8VSP	Change PR123 316k to 25.5k,PR124 402k to 51.1k	Adjust 1.8V voltage divided resistor (2010/03/07)
Pre MP		P52-PWR_1.05VSP/1.8VSP	Change PU9 from MP2121 to SY8033	MP2121 ESD fail (2010/03/07)
Pre MP		P52-PWR_1.05VSP/1.8VSP	Delete PR125 0 Ohm	Change for SY8033 solution(2010/03/07)
			Change PC85 from 0.1U to 22U	
			Delete PC87 10UF, PC84 0.1U	
Pre MP		P52-PWR_1.05VSP/1.8VSP	Change PC86 10U to 68P	Improve 1.8V transient under shoot(2010/03/07)
Pre MP		P49-PWR_CHARGER	Change PC24,PC25,PC26 10U to 4.7U	10U 0805 size price too high(2010/03/07)
Pre MP		P47-PWR_DCIN/DECTOR	Change PC12 from SE033105Z80 to SE000001380	Change PN(2010/03/07)

THIS SHEET OF ENGINEERING DRAWING IS THE PROPRIETARY PROPERTY OF COMPAL ELECTRONICS, INC. AND CONTAINS CONFIDENTIAL AND TRADE SECRET INFORMATION. THIS SHEET MAY NOT BE TRANSFERED FROM THE CUSTODY OF THE COMPETENT DIVISION OF R&D DEPARTMENT EXCEPT AS AUTHORIZED BY COMPAL ELECTRONICS, INC. NEITHER THIS SHEET NOR THE INFORMATION IT CONTAINS MAY BE USED BY OR DISCLOSED TO ANY THIRD PARTY WITHOUT PRIOR WRITTEN CONSENT OF COMPAL ELECTRONICS, INC.

PIR (Product Improve Record)

NWQAA LA-6061P SCHEMATIC CHANGE LIST
REVISION CHANGE: 0.1 TO 0.2
GERBER-OUT DATE: 2009/12/30

NO	DATE	PAGE	MODIFICATION LIST	PURPOSE
1	12/7	25	Add +5VALW for JPIO pin5	For BACK_SENSE detect
2	12/7	13	Remove JLVDS pin10 and pin12 for +LCDVDD_R	3D Panel max. current is 1.5A
3	12/8	33	Combine JTOUCH and JLP to JTPL and remove C648	For ME cost down
4	12/17	33	Remove D19	Move D19 to LS-6061P
5	12/18	26	Reverse JBT pin definition	Due to pin reverse
6	12/18	30	Add RA43	For codec EC_MUTE# issue
7	12/21	29	Change JREAD to Push-push type (R015-211-LM-A)	For PRD update
8	12/21	13	Move LED_PWM and BKOFF#_R to JLVDS pin10 and pin12	For avoiding +LCD_INV short issue
9	12/22	32	Change H7 footprint to "DEBUG_PAD-MB-S"	For debug use
10	12/23	27	Add D24 and Q36 for BT_CTRL	For WLAN & BT combo module
11	12/23	21	Add R461	For CIR_EN#
12	12/24	25	Change JPIO footprint and reverse its pin definition	For ME request
13	12/24	15	Add R145	For U9 ESD damage issue
14	12/24	29	Add F3	For Card reader issue
15	12/29	25	Add R148 and R149	For Sleep & play music
16	12/29	13	Add C871 and C872	For RF request

NWQAA LA-6061P SCHEMATIC CHANGE LIST
REVISION CHANGE: 0.2 TO 0.3
GERBER-OUT DATE: 2010/02/08

NO	DATE	PAGE	MODIFICATION LIST	PURPOSE
1	1/15	30	Add RA43	For sleep & music on battery mode
2	1/21	31	Add R462	Avoid VR_ON floating
3	1/25	32	Change UG3 to SA000022I00	For LDO issue
4	1/25	33	Change SW2 to @	For ME interfere issue
5	2/1	15	Add R130	For AOC monitor issue
6	2/1	31	Change U19 to SA00001J5A0	For KB926 E0 version
7	2/1	29	Remove F3	For UC1 ES2 sample
8	2/1	16	Add D19 and R150	For RTC charge issue
9	2/2	31	Add CAP_RST# to EC	For ESD issue
10	2/3	29	Change RC7 to 33 ohm	For EMI request

NWQAA LA-6061P SCHEMATIC CHANGE LIST
REVISION CHANGE: 0.3 TO 1.0
GERBER-OUT DATE: 2010/03/15

NO	DATE	PAGE	MODIFICATION LIST	PURPOSE
1	3/6	29	Add QC2 and RC16	For O2 B0 workaround
2	3/7	16	Change D13.2 power to +CHGRTC	For RTC issue
3	3/12	33	Change H15~H19 to H_3P3	For ME request
4	3/15	33	Remove SW2	For ESD request
5	3/15	30	Change CA9 and CA10 to 1U	For cut-off frequency
6	3/16	30	Change MONO_IN to AGND	For high frequency noise issue

NWQAA LA-6061P SCHEMATIC CHANGE LIST
REVISION CHANGE: 1.0 TO 2.0
GERBER-OUT DATE: 2010/03/19

NO	DATE	PAGE	MODIFICATION LIST	PURPOSE
1	3/17	29	Change cardreader to JMB385/389	For customer request
2	3/18	31	Remove D86	For ESD request
3	3/18	22	Add R52	For CRT wave issue
4	3/19	22	Change L12 to 2.2 ohm	For CRT wave issue
5	3/22	15	Add D54	For HDMI CEC issue
6	3/24	13	Change C213 to 1U	For NALAA ESATA performance low issue

Security Classification	Compal Secret Data		
Issued Date	2009/10/05	Deciphered Date	2010/01/23

THIS SHEET OF ENGINEERING DRAWING IS THE PROPRIETARY PROPERTY OF COMPAL ELECTRONICS, INC. AND CONTAINS CONFIDENTIAL AND TRADE SECRET INFORMATION. THIS SHEET MAY NOT BE TRANSFERED FROM THE CUSTODY OF THE COMPETENT DIVISION OF R&D DEPARTMENT EXCEPT AS AUTHORIZED BY COMPAL ELECTRONICS, INC. NEITHER THIS SHEET NOR THE INFORMATION IT CONTAINS MAY BE USED BY OR DISCLOSED TO ANY THIRD PARTY WITHOUT PRIOR WRITTEN CONSENT OF COMPAL ELECTRONICS, INC.