# PWWAA

## LC Marseille

# LA-6842P REV 0.2 Schematic

Intel Processor(ARD) /PCH(HM55)

2010-07-22 Rev 0.2

| | | | |
|---|---|---|---|
| Security Classification | Compal Secret Data | | |
| Issued Date | 2010/06/21 | Deciphered Date | 2011/06/21 |

THIS SHEET OF ENGINEERING DRAWING IS THE PROPRIETARY PROPERTY OF COMPAL ELECTRONICS, INC. AND CONTAINS CONFIDENTIAL AND TRADE SECRET INFORMATION. THIS SHEET MAY NOT BE TRANSFERED FROM THE CUSTODY OF THE COMPETENT DIVISION OF R&D DEPARTMENT EXCEPT AS AUTHORIZED BY COMPAL ELECTRONICS, INC. NEITHER THIS SHEET NOR THE INFORMATION IT CONTAINS MAY BE USED BY OR DISCLOSED TO ANY THIRD PARTY WITHOUT PRIOR WRITTEN CONSENT OF COMPAL ELECTRONICS, INC.

| | | |
|---|---|---|
| Compal Electronics, Inc. | | |
| Title: Cover Page | | |
| Size: B | Document Number: PWWAA LA6842P M/B | Rev: 0.2 |
| Date: Wednesday, July 28, 2010 | Sheet 1 of 45 | |

# Compal Confidential

**Model Name : PWWAA**
**File Name : LA-6842P**

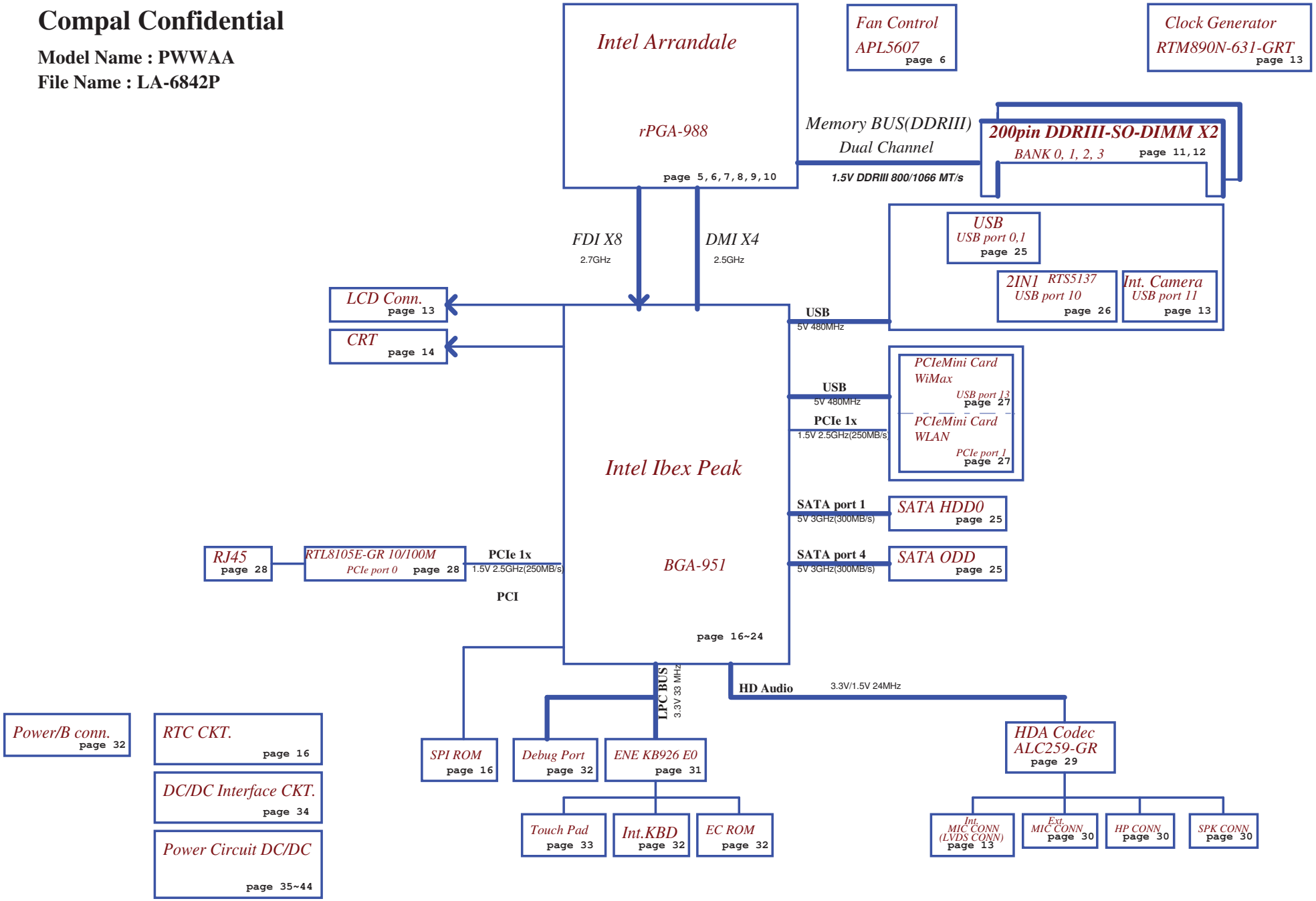


| | | | |
|---|---|---|---|
| Security Classification | Compal Secret Data | | |
| Issued Date | 2010/06/21 | Deciphered Date | 2011/06/21 |

THIS SHEET OF ENGINEERING DRAWING IS THE PROPRIETARY PROPERTY OF COMPAL ELECTRONICS, INC. AND CONTAINS CONFIDENTIAL AND TRADE SECRET INFORMATION. THIS SHEET MAY NOT BE TRANSFERED FROM THE CUSTODY OF THE COMPETENT DIVISION OF R&D DEPARTMENT EXCEPT AS AUTHORIZED BY COMPAL ELECTRONICS, INC. NEITHER THIS SHEET NOR THE INFORMATION IT CONTAINS MAY BE USED BY OR DISCLOSED TO ANY THIRD PARTY WITHOUT PRIOR WRITTEN CONSENT OF COMPAL ELECTRONICS, INC.

**Compal Electronics, Inc.**

Title: Block Diagrams

Size | Document Number: PWWAA LA6842P M/B | Rev: 0.2

Date: Wednesday, July 28, 2010 | Sheet 2 of 45

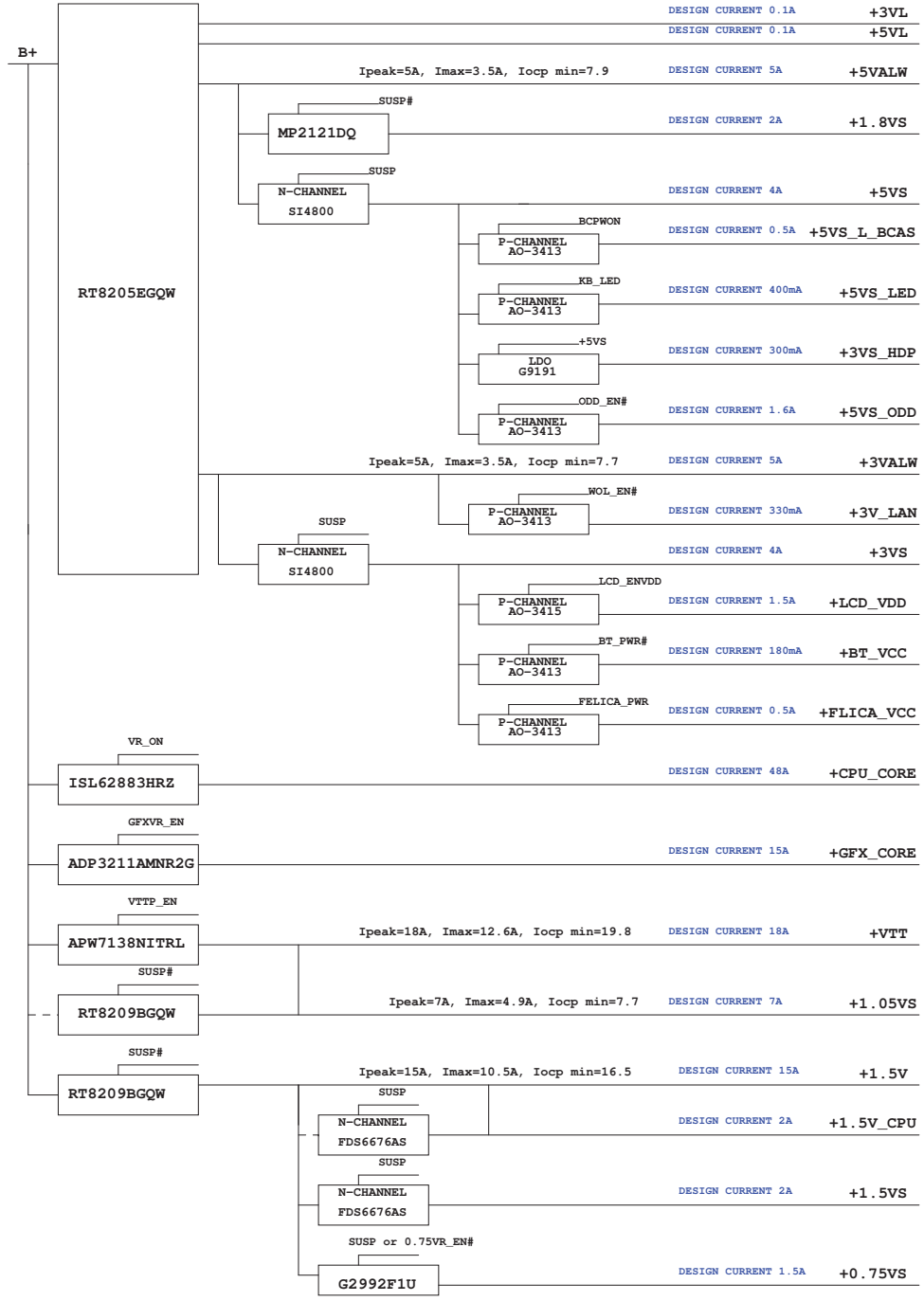


| Security Classification | Compal Secret Data | | |
|---|---|---|---|
| Issued Date | 2010/06/21 | Deciphered Date | 2011/06/21 |

THIS SHEET OF ENGINEERING DRAWING IS THE PROPRIETARY PROPERTY OF COMPAL ELECTRONICS, INC. AND CONTAINS CONFIDENTIAL AND TRADE SECRET INFORMATION. THIS SHEET MAY NOT BE TRANSFERED FROM THE CUSTODY OF THE COMPETENT DIVISION OF R&D DEPARTMENT EXCEPT AS AUTHORIZED BY COMPAL ELECTRONICS, INC. NEITHER THIS SHEET NOR THE INFORMATION IT CONTAINS MAY BE USED BY OR DISCLOSED TO ANY THIRD PARTY WITHOUT PRIOR WRITTEN CONSENT OF COMPAL ELECTRONICS, INC.

*Compal Electronics, Inc.*

Title: **Power Tree**

Size | Document Number: PWWAA LA6842P M/B | Rev: 0.2

Date: Wednesday, July 28, 2010 | Sheet 3 of 45

## Voltage Rails

( O MEANS ON X MEANS OFF )

| power plane / State | +RTCVCC | +B | +5VL<br>+3VL | +5VALW<br>+3VALW<br>+VSB | +1.5V | +5VS<br>+3VS<br>+1.5VS<br>+VGA_CORE<br>+CPU_CORE<br>+VTT<br>+1.05VS<br>+1.8VS<br>+1.1VS<br>+0.75VS |
|---|---|---|---|---|---|---|
| S0 | O | O | O | O | O | O |
| S1 | O | O | O | O | O | O |
| S3 | O | O | O | O | O | X |
| S5 S4/AC | O | O | O | O | X | X |
| S5 S4/ Battery only | O | O | O | X | X | X |
| S5 S4/AC & Battery don't exist | O | X | X | X | X | X |

## BTO Option Table

| | | | | | | | | | |
|---|---|---|---|---|---|---|---|---|---|
| Function | MINI PCI-E SLOT | | | LAN | | | | | |
| description | | | SLOT1 | LAN | | | | | |
| explain | | | WLAN/BT | 10/100M | | | | | |
| BTO | | | | | | | | | |

| | | | | | | | | |
|---|---|---|---|---|---|---|---|---|
| Function | | | | Camera & Mic | | | | |
| description | | | | Camera & Mic | | | | |
| explain | | | | Camera & Mic | | | | |
| BTO | | | | CAM@ | | | | |

| | | | |
|---|---|---|---|
| Function | S3 Power Saving | | |
| description | S3 Power Saving | | |
| explain | | Power Saving | |
| BTO | | | |

## PCH SM Bus Address

| Power | Device | HEX | Address |
|---|---|---|---|
| +3VS | DDR SO-DIMM 0 | A0 H | 1010 0000 b |
| +3VS | DDR SO-DIMM 1 | A4 H | 1010 0100 b |
| +3VS | Clock Generator | D2 H | 1101 0010 b |
| +3VS | New Card | | |
| +3VS | WLAN/WIMAX | | |
| +3VS | Clock Generator | | |

| STATE \ SIGNAL | SLP_S3# | SLP_S4# | SLP_S5# |
|---|---|---|---|
| Full ON | HIGH | HIGH | HIGH |
| S1 (Power On Suspend) | HIGH | HIGH | HIGH |
| S3 (Suspend to RAM) | LOW | HIGH | HIGH |
| S4 (Suspend to Disk) | LOW | LOW | HIGH |
| S5 (Soft OFF) | LOW | LOW | LOW |
| G3 | LOW | LOW | LOW |

## EC SM Bus1 Address

| Power | Device | HEX | Address |
|---|---|---|---|
| +3VL | Smart Battery | 16 H | 0001 0110 b |

| Power | Device | HEX | Address |
|---|---|---|---|

## EC SM Bus2 Address

| Power | Device | HEX | Address |
|---|---|---|---|
| +3VS | PCH | 96 H | 1001 0110 b |

| | | | |
|---|---|---|---|
| Security Classification | Compal Secret Data | | |
| Issued Date | 2010/06/21 | Deciphered Date | 2011/06/21 |

THIS SHEET OF ENGINEERING DRAWING IS THE PROPRIETARY PROPERTY OF COMPAL ELECTRONICS, INC. AND CONTAINS CONFIDENTIAL AND TRADE SECRET INFORMATION. THIS SHEET MAY NOT BE TRANSFERED FROM THE CUSTODY OF THE COMPETENT DIVISION OF R&D DEPARTMENT EXCEPT AS AUTHORIZED BY COMPAL ELECTRONICS, INC. NEITHER THIS SHEET NOR THE INFORMATION IT CONTAINS MAY BE USED BY OR DISCLOSED TO ANY THIRD PARTY WITHOUT PRIOR WRITTEN CONSENT OF COMPAL ELECTRONICS, INC.

**Compal Electronics, Inc.**

Title: **Notes List**

Size: Custom | Document Number: **PWWAA LA6842P M/B** | Rev: 0.2

Date: Wednesday, July 28, 2010 | Sheet 4 of 45

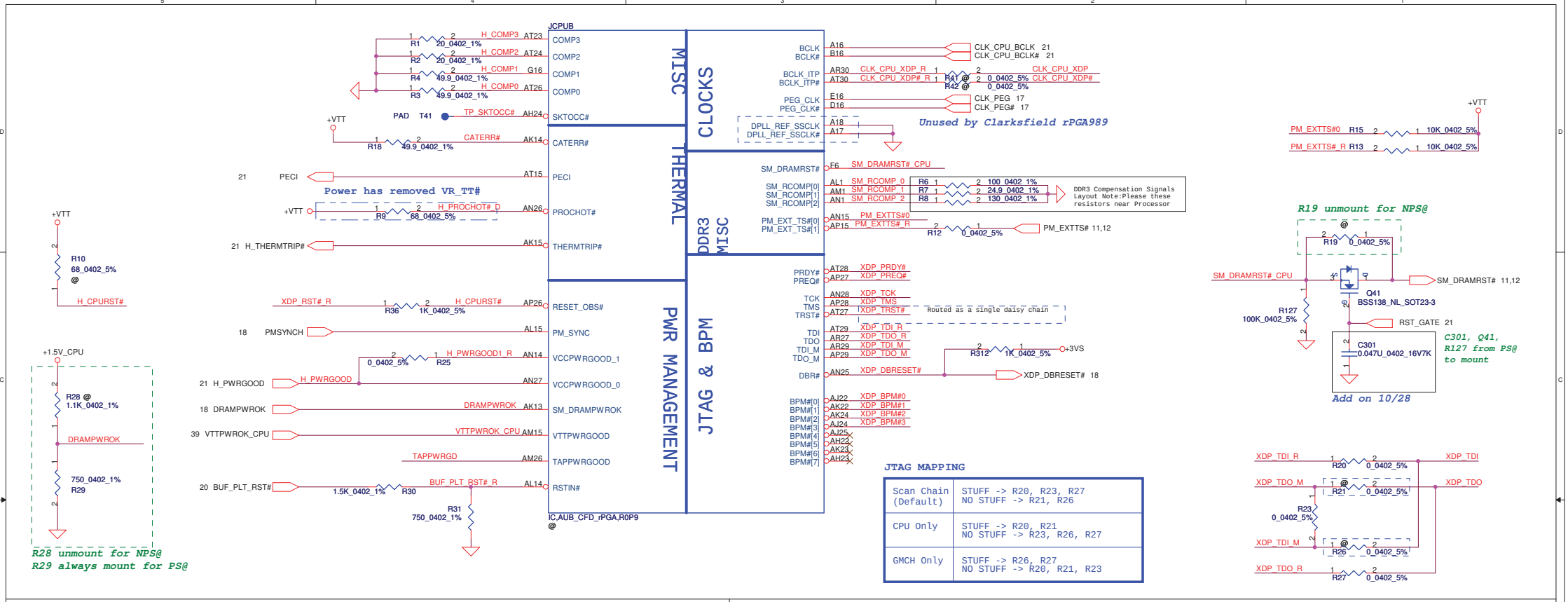


## JTAG MAPPING

| | |
|---|---|
| Scan Chain (Default) | STUFF -> R20, R23, R27<br>NO STUFF -> R21, R26 |
| CPU Only | STUFF -> R20, R21<br>NO STUFF -> R23, R26, R27 |
| GMCH Only | STUFF -> R26, R27<br>NO STUFF -> R20, R21, R23 |

## For S3 CPU Power Saving

place near JCPU

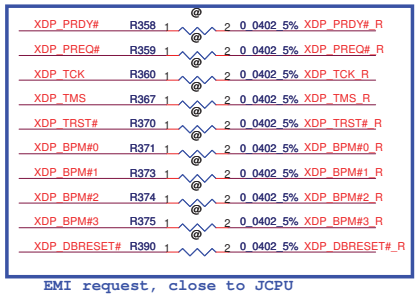


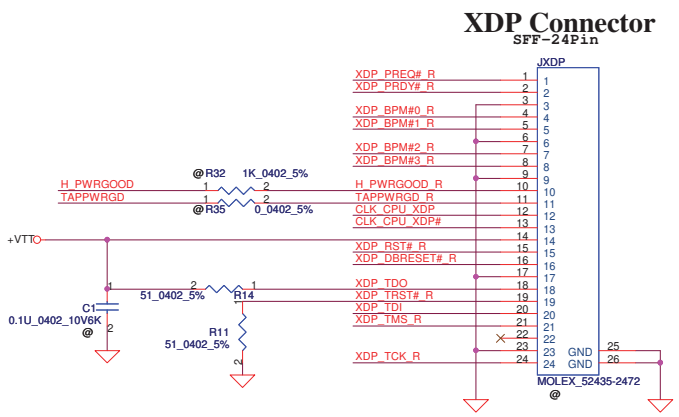


| Security Classification | Compal Secret Data | | |
|---|---|---|---|
| Issued Date | 2010/06/21 | Deciphered Date | 2011/06/21 |

THIS SHEET OF ENGINEERING DRAWING IS THE PROPRIETARY PROPERTY OF COMPAL ELECTRONICS, INC. AND CONTAINS CONFIDENTIAL AND TRADE SECRET INFORMATION. THIS SHEET MAY NOT BE TRANSFERED FROM THE CUSTODY OF THE COMPETENT DIVISION OF R&D DEPARTMENT EXCEPT AS AUTHORIZED BY COMPAL ELECTRONICS, INC. NEITHER THIS SHEET NOR THE INFORMATION IT CONTAINS MAY BE USED BY OR DISCLOSED TO ANY THIRD PARTY WITHOUT PRIOR WRITTEN CONSENT OF COMPAL ELECTRONICS, INC.

**Compal Electronics, Inc.**

Title: CPU CLK/MISC/JTAG

Size: Custom | Document Number: PWWAA LA6842P M/B | Rev: 0.2

Date: Wednesday, July 28, 2010 | Sheet 5 of 45

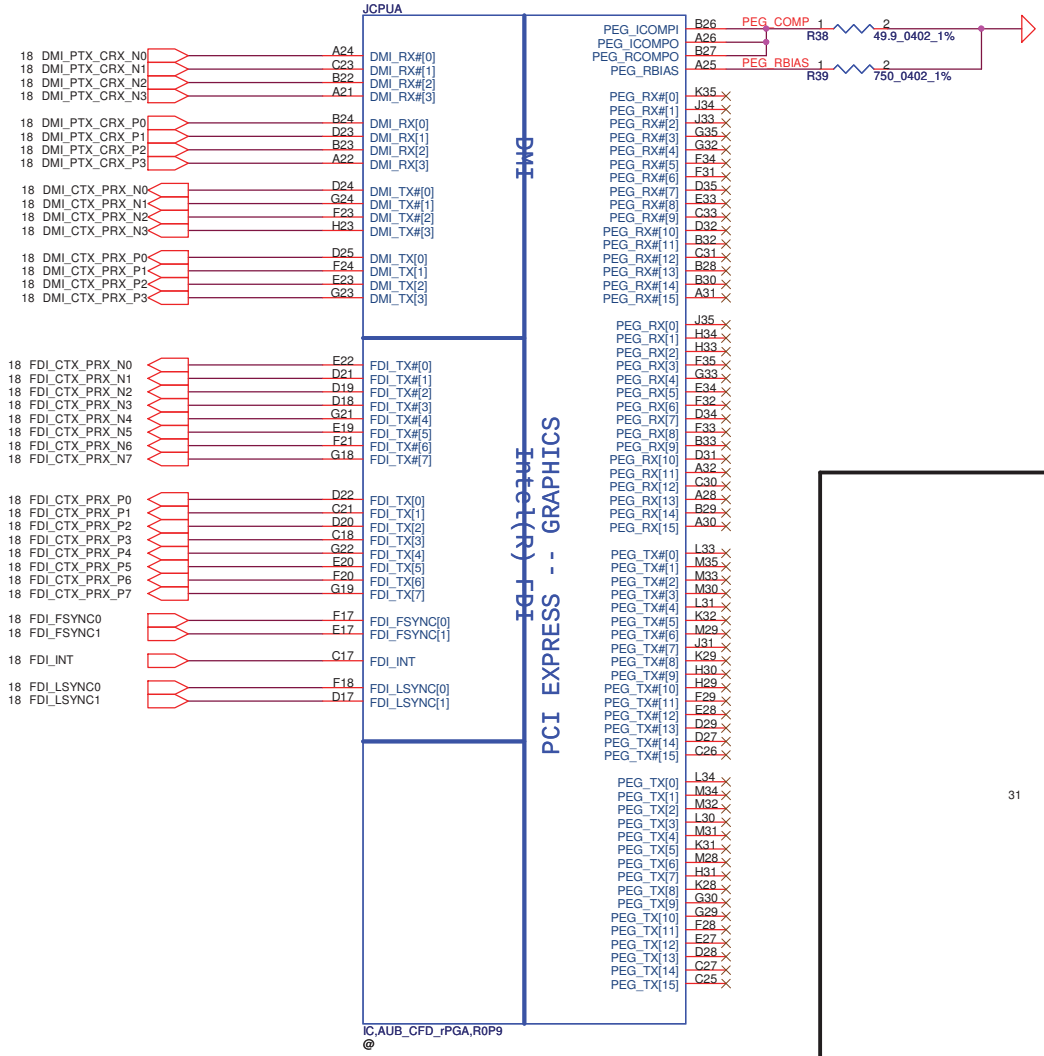


## FAN Control Circuit

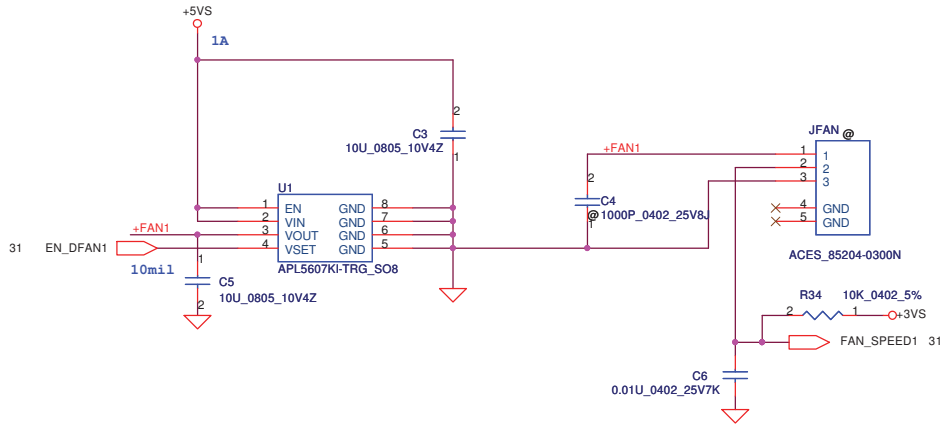


Remove Cap, for EMI

| Security Classification | Compal Secret Data | | |
|---|---|---|---|
| Issued Date | 2010/06/21 | Deciphered Date | 2011/06/21 |

THIS SHEET OF ENGINEERING DRAWING IS THE PROPRIETARY PROPERTY OF COMPAL ELECTRONICS, INC. AND CONTAINS CONFIDENTIAL AND TRADE SECRET INFORMATION. THIS SHEET MAY NOT BE TRANSFERED FROM THE CUSTODY OF THE COMPETENT DIVISION OF R&D DEPARTMENT EXCEPT AS AUTHORIZED BY COMPAL ELECTRONICS, INC. NEITHER THIS SHEET NOR THE INFORMATION IT CONTAINS MAY BE USED BY OR DISCLOSED TO ANY THIRD PARTY WITHOUT PRIOR WRITTEN CONSENT OF COMPAL ELECTRONICS, INC.

**Compal Electronics, Inc.**

Title: **CPU DMI/FDI/PEG**

Size: B | Document Number: **PWWAA LA6842P M/B** | Rev: 0.2

Date: Wednesday, July 28, 2010 | Sheet 6 of 45

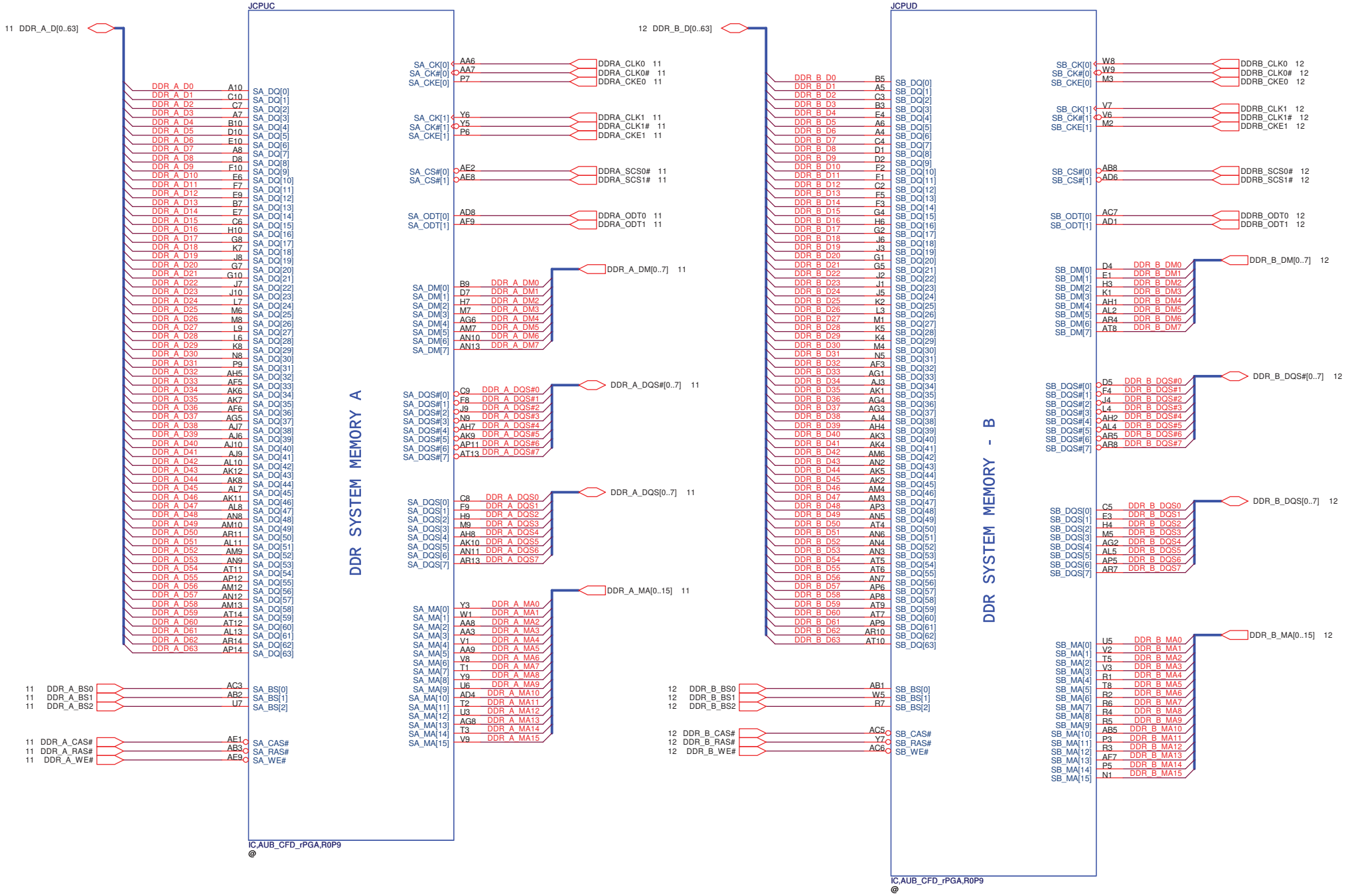


| Security Classification | Compal Secret Data | | |
|---|---|---|---|
| Issued Date | 2010/06/21 | Deciphered Date | 2011/06/21 |

THIS SHEET OF ENGINEERING DRAWING IS THE PROPRIETARY PROPERTY OF COMPAL ELECTRONICS, INC. AND CONTAINS CONFIDENTIAL AND TRADE SECRET INFORMATION. THIS SHEET MAY NOT BE TRANSFERED FROM THE CUSTODY OF THE COMPETENT DIVISION OF R&D DEPARTMENT EXCEPT AS AUTHORIZED BY COMPAL ELECTRONICS, INC. NEITHER THIS SHEET NOR THE INFORMATION IT CONTAINS MAY BE USED BY OR DISCLOSED TO ANY THIRD PARTY WITHOUT PRIOR WRITTEN CONSENT OF COMPAL ELECTRONICS, INC.

**Compal Electronics, Inc.**

Title: **CPU DDRIII**

Size: B | Document Number: **PWWAA LA6842P M/B** | Rev: 0.2

Date: Wednesday, July 28, 2010 | Sheet 7 of 45

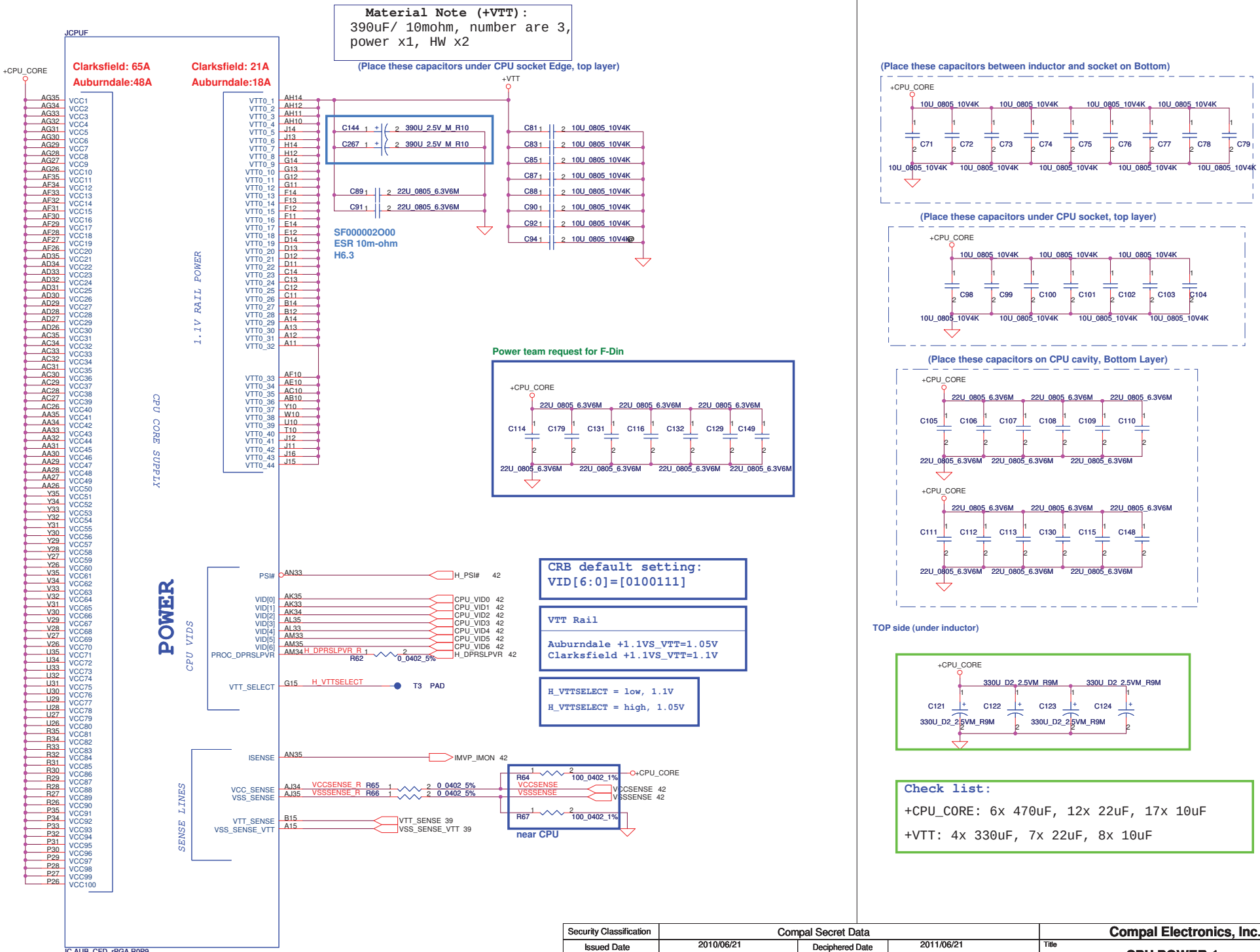


| Security Classification | Compal Secret Data | | |
|---|---|---|---|
| Issued Date | 2010/06/21 | Deciphered Date | 2011/06/21 |

THIS SHEET OF ENGINEERING DRAWING IS THE PROPRIETARY PROPERTY OF COMPAL ELECTRONICS, INC. AND CONTAINS CONFIDENTIAL AND TRADE SECRET INFORMATION. THIS SHEET MAY NOT BE TRANSFERED FROM THE CUSTODY OF THE COMPETENT DIVISION OF R&D DEPARTMENT EXCEPT AS AUTHORIZED BY COMPAL ELECTRONICS, INC. NEITHER THIS SHEET NOR THE INFORMATION IT CONTAINS MAY BE USED BY OR DISCLOSED TO ANY THIRD PARTY WITHOUT PRIOR WRITTEN CONSENT OF COMPAL ELECTRONICS, INC.

**Compal Electronics, Inc.**

Title: **CPU POWER-1**

Size: Custom | Document Number: **PWWAA LA6842P M/B** | Rev: 0.2

Date: Wednesday, July 28, 2010 | Sheet 8 of 45

For EMI request

+GFX_CORE
47P_0402_50V8J 47P_0402_50V8J
C97 @ C118 @ C119 @ C93 @
47P_0402_50V8J 47P_0402_50V8J

+1.5V_CPU +1.5VS
PJ32 @
JUMP_43X79

7/22 modified for cost down.

form PS@ to mount

+1.5V_CPU 3A Q33 +1.5V
R424 470_0805_5% C273 10U_0805_10V4K FDS6676AS_SO8
R418 220K_0402_5% +VSB
Q46B SUSP 2N7002DW-T/R7_SOT363-6
C472 0.1U_0402_25V6 R417 820K_0402_5% Q46A SUSP 2N7002DW-T/R7_SOT363-6 SUSP 34,41

Change C271 to 4.5mm height OS-CON at PVT

+GFX_CORE
C271 330U_2.5V_M_R17
22U_0805_6.3V6M 1U_0402_6.3V4Z C95 C127 C117 C96 C120 C86 10U_0805_6.3V6M
22U_0805_6.3V6M 1U_0402_6.3V4Z 10U_0805_6.3V6M

Add C496 Co-Layout with C271

+GFX_CORE
@ C496 330U_D2_2VM_R6M

For POLY Cap.

0714 --> C271 mount,
C496 unmount

JCPUG

GRAPHICS: VAXG1 VAXG2 VAXG3 VAXG4 VAXG5 VAXG6 VAXG7 VAXG8 VAXG9 VAXG10 VAXG11 VAXG12 VAXG13 VAXG14 VAXG15 VAXG16 VAXG17 VAXG18 VAXG19 VAXG20 VAXG21 VAXG22 VAXG23 VAXG24 VAXG25 VAXG26 VAXG27 VAXG28 VAXG29 VAXG30 VAXG31 VAXG32 VAXG33 VAXG34 VAXG35 VAXG36

Auburndale:22A

SENSE LINES: VAXG_SENSE AR22, VSSAXG_SENSE AT22
VCC_AXG_SENSE_R R365 0_0402_5%, VSS_AXG_SENSE_R R384 0_0402_5%
R69 100_0402_1% +GFX_CORE
VCC_AXG_SENSE 43, VSS_AXG_SENSE 43
For Power request R82 100_0402_1%
near CPU

GRAPHICS VIDS: GFX_VID[0] AM22, GFX_VID[1] AP22, GFX_VID[2] AN22, GFX_VID[3] AP23, GFX_VID[4] AM23, GFX_VID[5] AP24, GFX_VID[6] AN24
GFXVR_VID_0 43, GFXVR_VID_1 43, GFXVR_VID_2 43, GFXVR_VID_3 43, GFXVR_VID_4 43, GFXVR_VID_5 43, GFXVR_VID_6 43

Change R136 to 470 ohm for GFX issue

GFXVR_EN
GFX_VR_EN AR25, GFX_DPRSLPVR AT25, GFX_IMON AM24
GFXVR_DPRSLPVR, GFXVR_IMON
GFXVR_EN 43, T8 PAD, GFXVR_IMON 43
R50 470_0402_5%
R687 @ 1K_0402_5%

C230 C314 C205 C186 0.1U_0402_16V4Z

remove PJ30

PJ31 @ JUMP_43X79 +1.5V

Clarksfield: 5A
Auburndale:3A

DDR3 - 1.5V RAILS: VDDQ1 AJ1, VDDQ2 AF1, VDDQ3 AE7, VDDQ4 AE4, VDDQ5 AC1, VDDQ6 AB7, VDDQ7 AB4, VDDQ8 Y1, VDDQ9 W7, VDDQ10 W4, VDDQ11 U1, VDDQ12 T7, VDDQ13 T4, VDDQ14 P1, VDDQ15 N7, VDDQ16 N4, VDDQ17 L1, VDDQ18 H1

+1.5V_CPU
1U_0402_6.3V4Z 1U_0402_6.3V4Z 22U_0805_6.3V6M
C133 C134 C135 C136 C137 C138 C139 C216 390U_2.5V_M_R10
1U_0402_6.3V4Z 1U_0402_6.3V4Z 1U_0402_6.3V4Z 22U_0805_6.3V6M

PJ31 need to open for S3 CPU Power Saving

POWER

FDI: VTT1_45 J24, VTT1_46 J23, VTT1_47 H25

+VTT
C141 22U_0805_6.3V6M C142 22U_0805_6.3V6M

Clarksfield: 21A
Auburndale:18A

1.1V: VTT0_59 P10, VTT0_60 N10, VTT0_61 L10, VTT0_62 K10

+VTT
C143 10U_0805_10V4K

(Place these capacitors under CPU socket Edge, top layer)

PEG & DMI: VTT1_48 K26, VTT1_49 J27, VTT1_50 J26, VTT1_51 J25, VTT1_52 H27, VTT1_53 G28, VTT1_54 G27, VTT1_55 G26, VTT1_56 F26, VTT1_57 E26, VTT1_58 E25

+VTT
C146 22U_0805_6.3V6M C147 22U_0805_6.3V6M

VTT1_63 J22, VTT1_64 J20, VTT1_65 J18, VTT1_66 H21, VTT1_67 H20, VTT1_68 H19

+VTT
C145 22U_0805_6.3V6M

(Place these capacitors under CPU socket, top layer)

(Place these capacitors under CPU socket, top layer)

1.8V: VCCPLL1 L26, VCCPLL2 L27, VCCPLL3 M26

Clarksfield: 0.6A
Auburndale:1.35A

+1.8VS_H_PLL 1U_0402_6.3V4Z 4.7U_0603_6.3V6K +1.8VS
R71 0_0805_5%
C151 1U_0402_6.3V4Z C152 C153 2.2U_0603_6.3V4Z C154 C155 22U_0805_6.3V6M

IC,AUB_CFD_rPGA,R0P9
@

| Security Classification | Compal Secret Data | | |
|---|---|---|---|
| Issued Date | 2010/06/21 | Deciphered Date | 2011/06/21 |

THIS SHEET OF ENGINEERING DRAWING IS THE PROPRIETARY PROPERTY OF COMPAL ELECTRONICS, INC. AND CONTAINS CONFIDENTIAL AND TRADE SECRET INFORMATION. THIS SHEET MAY NOT BE TRANSFERED FROM THE CUSTODY OF THE COMPETENT DIVISION OF R&D DEPARTMENT EXCEPT AS AUTHORIZED BY COMPAL ELECTRONICS, INC. NEITHER THIS SHEET NOR THE INFORMATION IT CONTAINS MAY BE USED BY OR DISCLOSED TO ANY THIRD PARTY WITHOUT PRIOR WRITTEN CONSENT OF COMPAL ELECTRONICS, INC.

Compal Electronics, Inc.

Title: CPU POWER-2

Size: B | Document Number: PWWAA LA6842P M/B | Rev: 0.2

Date: Wednesday, July 28, 2010 | Sheet 9 of 45

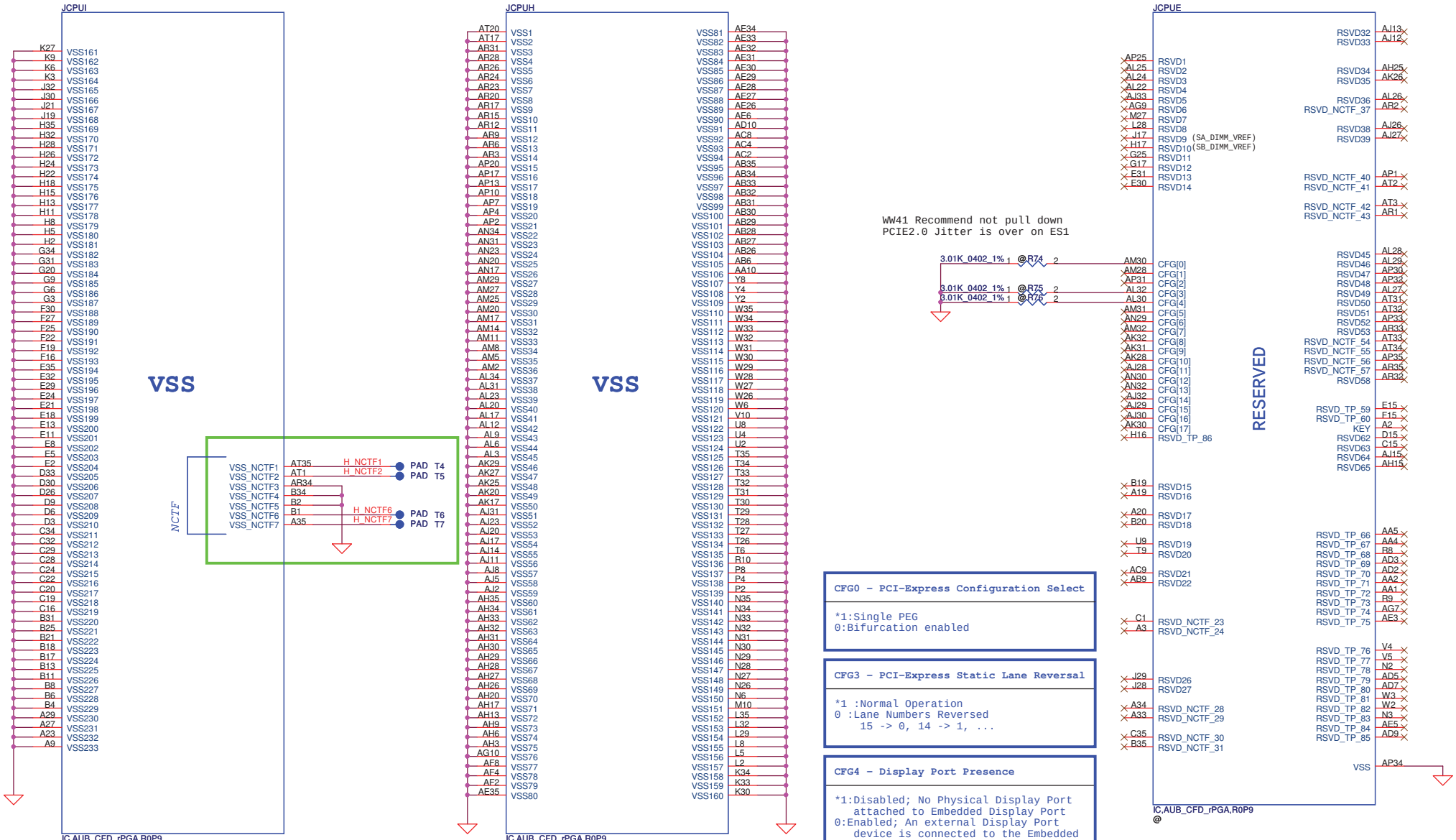


**CFG0 - PCI-Express Configuration Select**

*1:Single PEG
0:Bifurcation enabled

**CFG3 - PCI-Express Static Lane Reversal**

*1 :Normal Operation
0 :Lane Numbers Reversed
15 -> 0, 14 -> 1, ...

**CFG4 - Display Port Presence**

*1:Disabled; No Physical Display Port attached to Embedded Display Port
0:Enabled; An external Display Port device is connected to the Embedded Display Port

*:Default

| Security Classification | Compal Secret Data | | |
|---|---|---|---|
| Issued Date | 2010/06/21 | Deciphered Date | 2011/06/21 |

THIS SHEET OF ENGINEERING DRAWING IS THE PROPRIETARY PROPERTY OF COMPAL ELECTRONICS, INC. AND CONTAINS CONFIDENTIAL AND TRADE SECRET INFORMATION. THIS SHEET MAY NOT BE TRANSFERED FROM THE CUSTODY OF THE COMPETENT DIVISION OF R&D DEPARTMENT EXCEPT AS AUTHORIZED BY COMPAL ELECTRONICS, INC. NEITHER THIS SHEET NOR THE INFORMATION IT CONTAINS MAY BE USED BY OR DISCLOSED TO ANY THIRD PARTY WITHOUT PRIOR WRITTEN CONSENT OF COMPAL ELECTRONICS, INC.

**Compal Electronics, Inc.**

Title: **CPU GND/RESERVED/XDP**

Size: Custom | Document Number: **PWWAA LA6842P M/B** | Rev: 0.2

Date: Wednesday, July 28, 2010 | Sheet 10 of 45

# DDR3 SO-DIMM A
## Standard Type

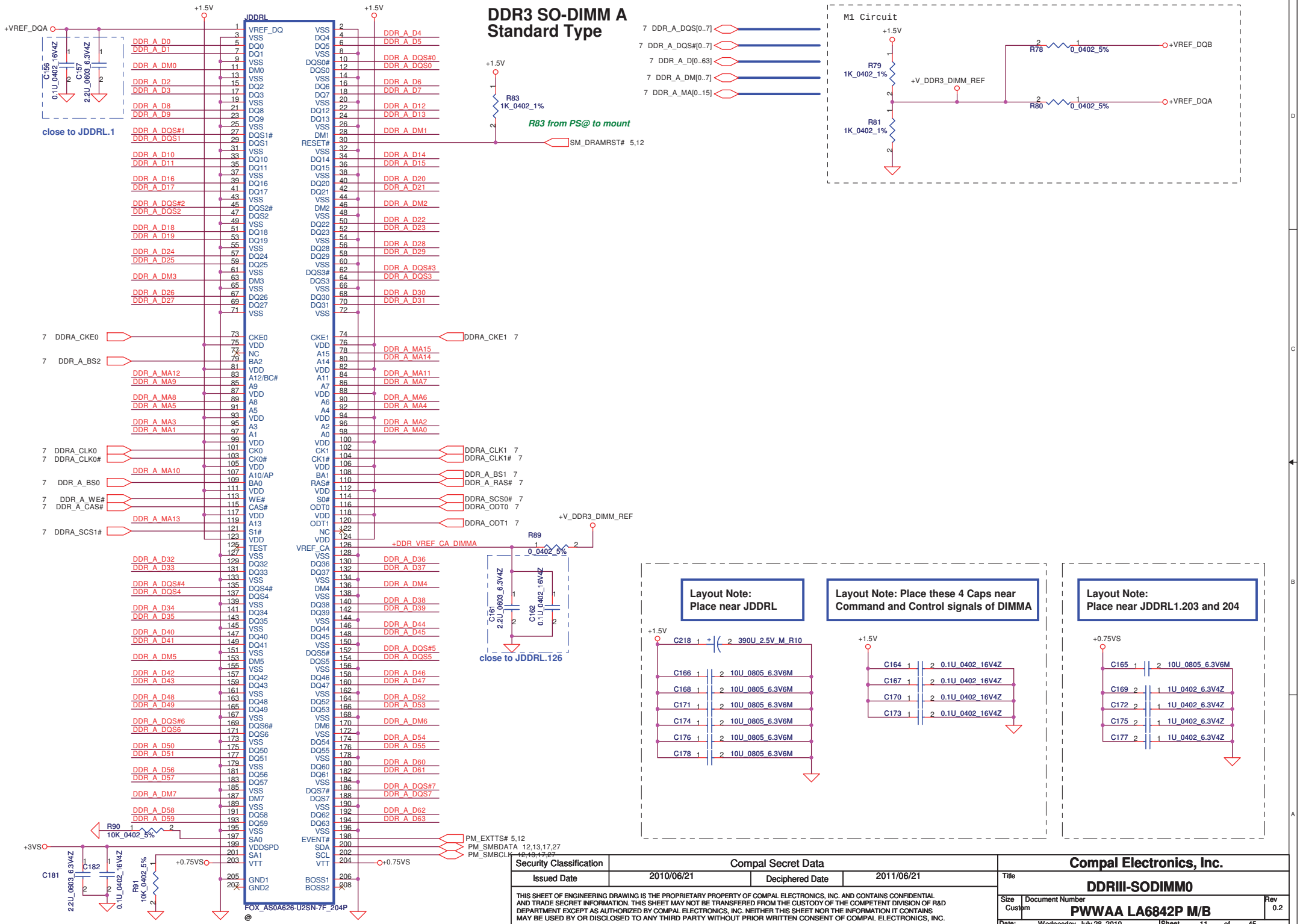


| Security Classification | Compal Secret Data | | |
|---|---|---|---|
| Issued Date | 2010/06/21 | Deciphered Date | 2011/06/21 |

THIS SHEET OF ENGINEERING DRAWING IS THE PROPRIETARY PROPERTY OF COMPAL ELECTRONICS, INC. AND CONTAINS CONFIDENTIAL AND TRADE SECRET INFORMATION. THIS SHEET MAY NOT BE TRANSFERED FROM THE CUSTODY OF THE COMPETENT DIVISION OF R&D DEPARTMENT EXCEPT AS AUTHORIZED BY COMPAL ELECTRONICS, INC. NEITHER THIS SHEET NOR THE INFORMATION IT CONTAINS MAY BE USED BY OR DISCLOSED TO ANY THIRD PARTY WITHOUT PRIOR WRITTEN CONSENT OF COMPAL ELECTRONICS, INC.

**Compal Electronics, Inc.**

Title: **DDRIII-SODIMM0**

Size: Custom | Document Number: **PWWAA LA6842P M/B** | Rev: 0.2

Date: Wednesday, July 28, 2010 | Sheet 11 of 45

# Standard Type
# DDR3 SO-DIMM B

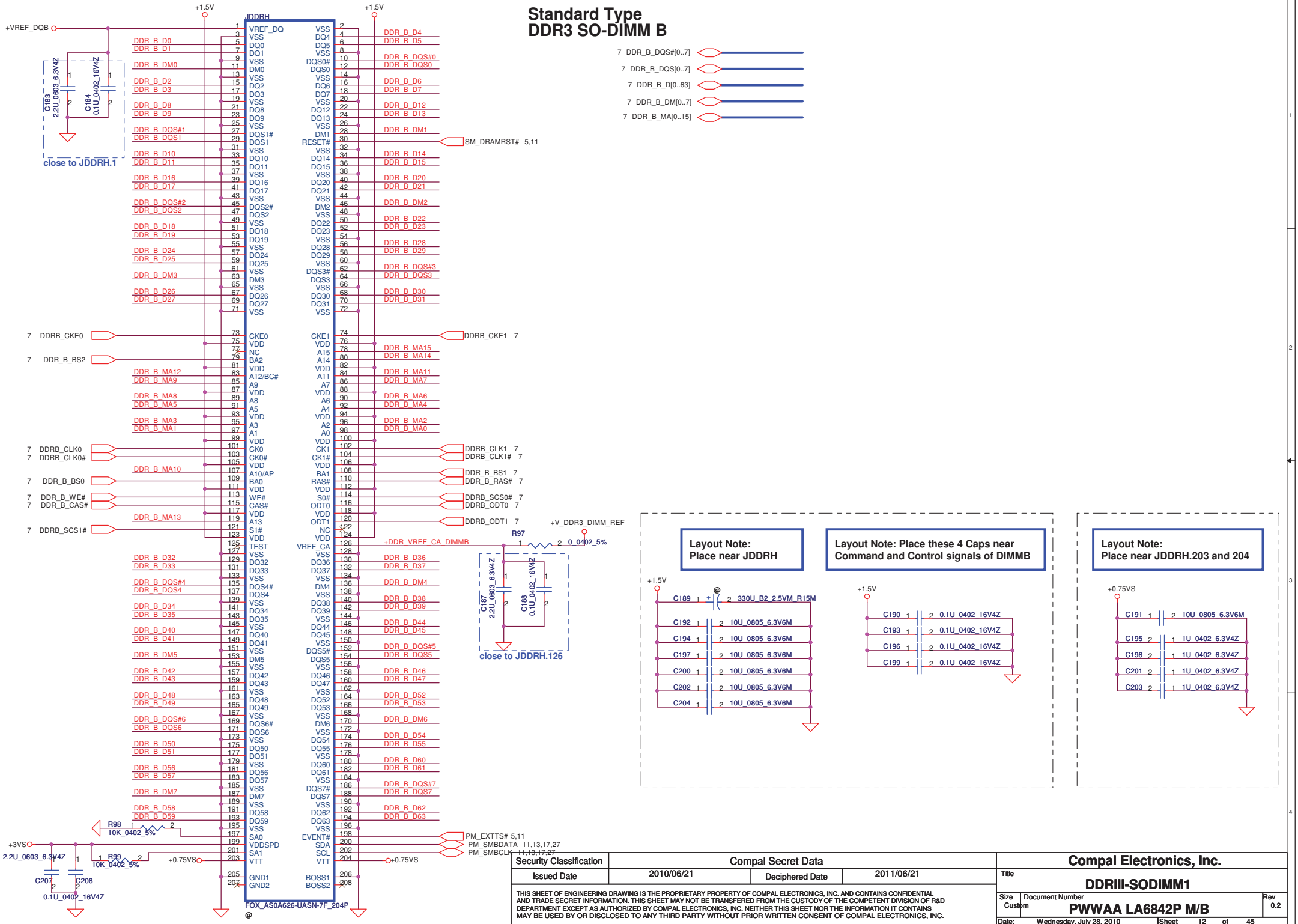


| Security Classification | Compal Secret Data | | |
|---|---|---|---|
| Issued Date | 2010/06/21 | Deciphered Date | 2011/06/21 |

THIS SHEET OF ENGINEERING DRAWING IS THE PROPRIETARY PROPERTY OF COMPAL ELECTRONICS, INC. AND CONTAINS CONFIDENTIAL AND TRADE SECRET INFORMATION. THIS SHEET MAY NOT BE TRANSFERED FROM THE CUSTODY OF THE COMPETENT DIVISION OF R&D DEPARTMENT EXCEPT AS AUTHORIZED BY COMPAL ELECTRONICS, INC. NEITHER THIS SHEET NOR THE INFORMATION IT CONTAINS MAY BE USED BY OR DISCLOSED TO ANY THIRD PARTY WITHOUT PRIOR WRITTEN CONSENT OF COMPAL ELECTRONICS, INC.

**Compal Electronics, Inc.**

Title: **DDRIII-SODIMM1**

Size: Custom | Document Number: **PWWAA LA6842P M/B** | Rev: 0.2

Date: Wednesday, July 28, 2010 | Sheet 12 of 45

# Clock Generator

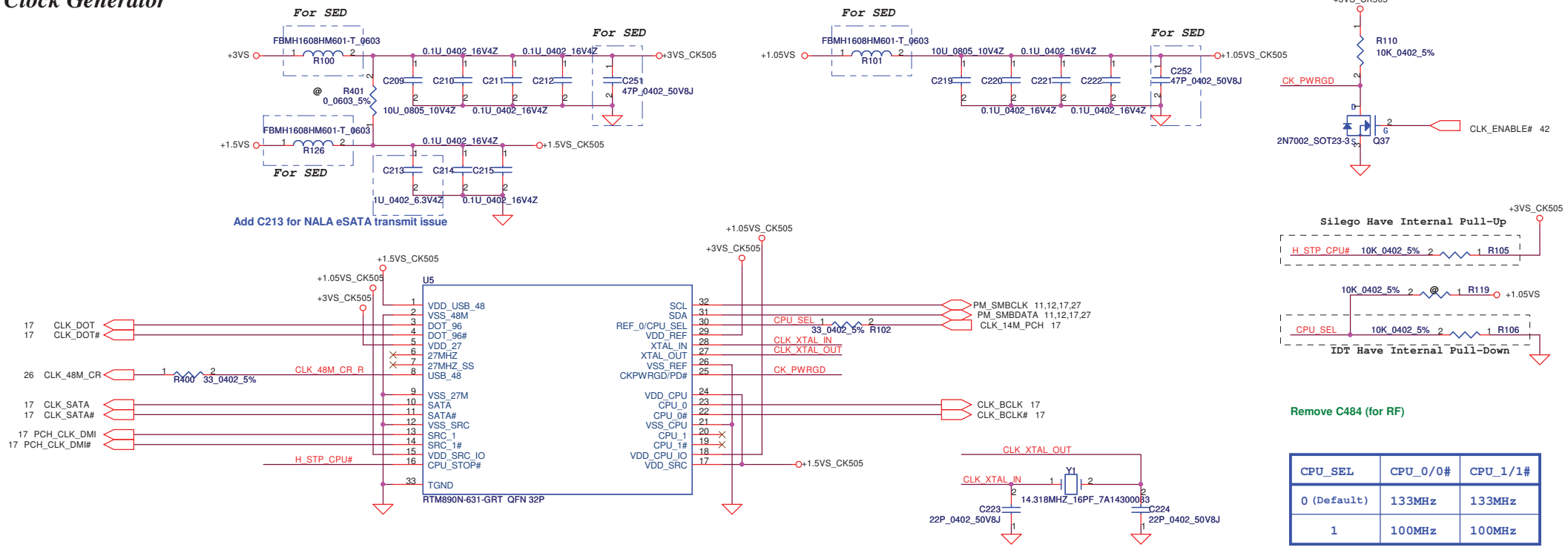


Remove C484 (for RF)

| CPU_SEL | CPU_0/0# | CPU_1/1# |
|---|---|---|
| 0 (Default) | 133MHz | 133MHz |
| 1 | 100MHz | 100MHz |

# LVDS / Int.Camera / Int.MIC Conn

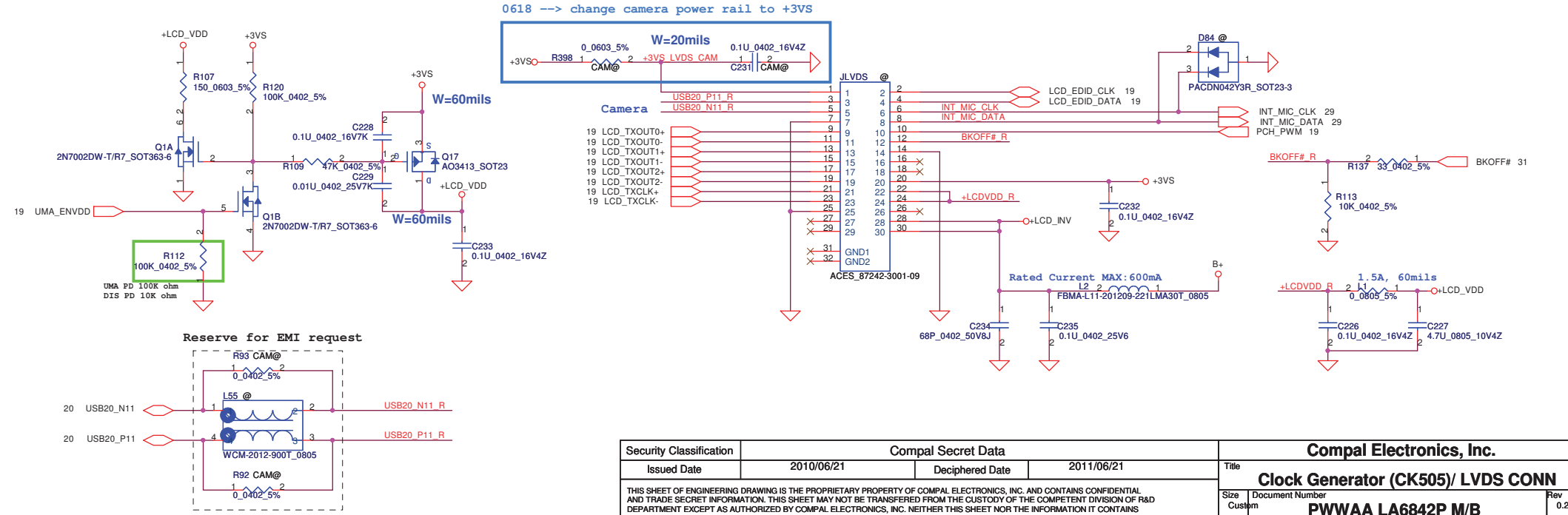


| Security Classification | Compal Secret Data | | |
|---|---|---|---|
| Issued Date | 2010/06/21 | Deciphered Date | 2011/06/21 |

THIS SHEET OF ENGINEERING DRAWING IS THE PROPRIETARY PROPERTY OF COMPAL ELECTRONICS, INC. AND CONTAINS CONFIDENTIAL AND TRADE SECRET INFORMATION. THIS SHEET MAY NOT BE TRANSFERED FROM THE CUSTODY OF THE COMPETENT DIVISION OF R&D DEPARTMENT EXCEPT AS AUTHORIZED BY COMPAL ELECTRONICS, INC. NEITHER THIS SHEET NOR THE INFORMATION IT CONTAINS MAY BE USED BY OR DISCLOSED TO ANY THIRD PARTY WITHOUT PRIOR WRITTEN CONSENT OF COMPAL ELECTRONICS, INC.

**Compal Electronics, Inc.**

Title: **Clock Generator (CK505)/ LVDS CONN**

Size: Custom | Document Number: **PWWAA LA6842P M/B** | Rev: 0.2

Date: Wednesday, July 28, 2010 | Sheet 13 of 45

# CRT CONNECTOR

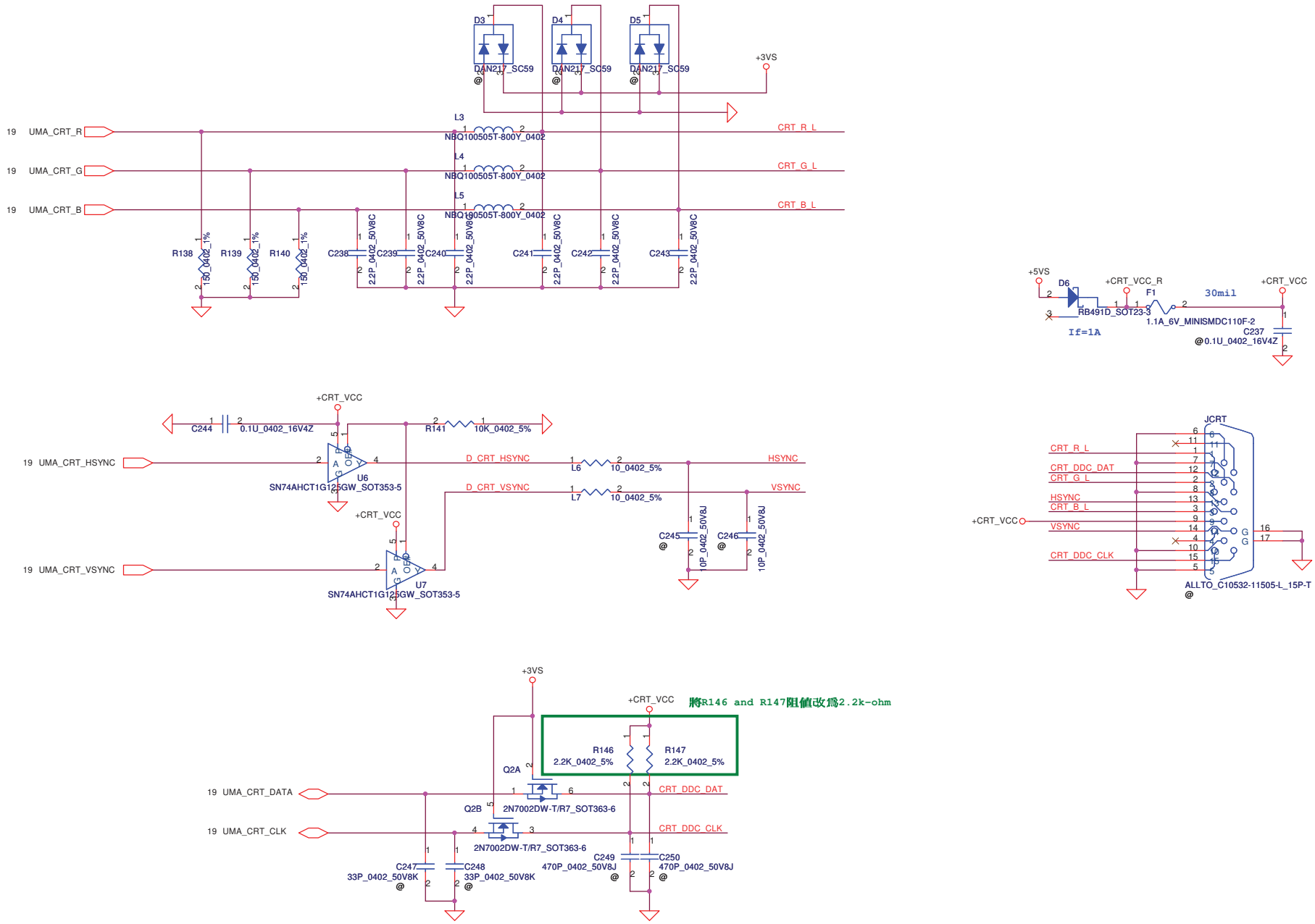


| Security Classification | Compal Secret Data | | |
|---|---|---|---|
| Issued Date | 2010/06/21 | Deciphered Date | 2011/06/21 |

THIS SHEET OF ENGINEERING DRAWING IS THE PROPRIETARY PROPERTY OF COMPAL ELECTRONICS, INC. AND CONTAINS CONFIDENTIAL AND TRADE SECRET INFORMATION. THIS SHEET MAY NOT BE TRANSFERED FROM THE CUSTODY OF THE COMPETENT DIVISION OF R&D DEPARTMENT EXCEPT AS AUTHORIZED BY COMPAL ELECTRONICS, INC. NEITHER THIS SHEET NOR THE INFORMATION IT CONTAINS MAY BE USED BY OR DISCLOSED TO ANY THIRD PARTY WITHOUT PRIOR WRITTEN CONSENT OF COMPAL ELECTRONICS, INC.

**Compal Electronics, Inc.**

Title: CRT\TV\LVDS

Size | Document Number: PWWAA LA6842P M/B | Rev: 0.2

Date: Wednesday, July 28, 2010 | Sheet 14 of 45

## 0624 --> Remove BIOS ROM Debug Circuit

| | | | |
|---|---|---|---|
| Security Classification | Compal Secret Data | | |
| Issued Date | 2010/06/21 | Deciphered Date | 2011/06/21 |

THIS SHEET OF ENGINEERING DRAWING IS THE PROPRIETARY PROPERTY OF COMPAL ELECTRONICS, INC. AND CONTAINS CONFIDENTIAL AND TRADE SECRET INFORMATION. THIS SHEET MAY NOT BE TRANSFERED FROM THE CUSTODY OF THE COMPETENT DIVISION OF R&D DEPARTMENT EXCEPT AS AUTHORIZED BY COMPAL ELECTRONICS, INC. NEITHER THIS SHEET NOR THE INFORMATION IT CONTAINS MAY BE USED BY OR DISCLOSED TO ANY THIRD PARTY WITHOUT PRIOR WRITTEN CONSENT OF COMPAL ELECTRONICS, INC.

**Compal Electronics, Inc.**

Title: BIOS ROM Debug

Size | Document Number: PWWAA LA6842P M/B | Rev: 0.2

Date: Wednesday, July 28, 2010 | Sheet 15 of 45

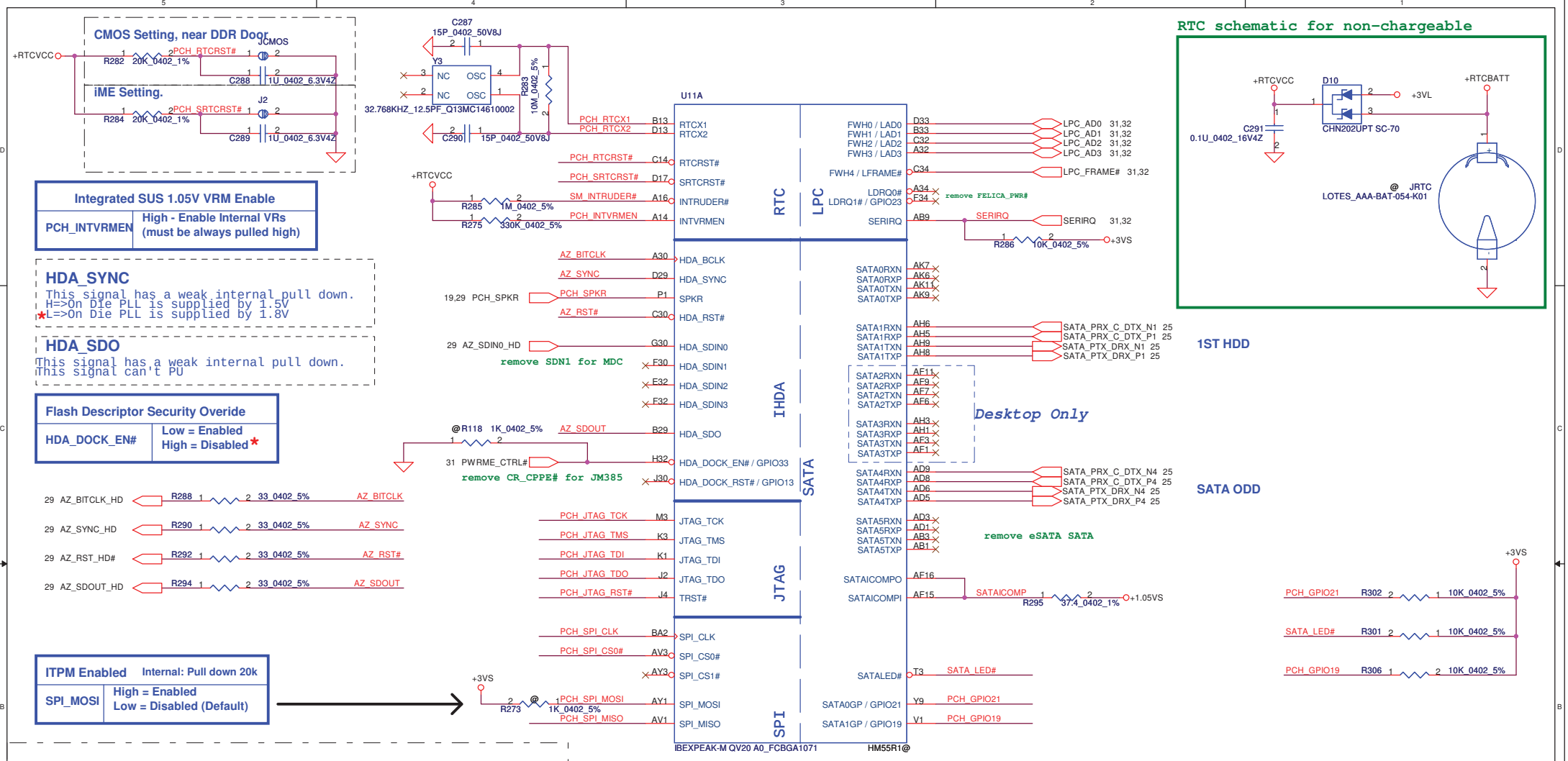


| PCH Pin | RefDes | PCH JTAG Enable ES1 | PCH JTAG Enable ES2 | PCH JTAG Disable (Default) ES1 | PCH JTAG Disable (Default) ES2 |
|---|---|---|---|---|---|
| PCH_JTAG_TDO | R358 | No Install | 200ohm | No Install | No Install |
| | R535 | No Install | 100ohm | No Install | No Install |
| PCH_JTAG_TMS | R355 | 200ohm | 200ohm | No Install | No Install |
| | R354 | 100ohm | 100ohm | No Install | No Install |
| PCH_JTAG_TDI | R536 | 200ohm | 200ohm | 20Kohm | No Install |
| | R537 | 100ohm | 100ohm | 10Kohm | No Install |
| PCH_JTAG_TCK | R156 | 51ohm | 51ohm | 51ohm | 51ohm |
| PCH_JTAG_RST# | R643 | 20Kohm | 20Kohm | No Install | No Install |
| | R353 | 10Kohm | 10Kohm | No Install | No Install |

| | | | |
|---|---|---|---|
| Security Classification | Compal Secret Data | | |
| Issued Date | 2010/06/21 | Deciphered Date | 2011/06/21 |

THIS SHEET OF ENGINEERING DRAWING IS THE PROPRIETARY PROPERTY OF COMPAL ELECTRONICS, INC. AND CONTAINS CONFIDENTIAL AND TRADE SECRET INFORMATION. THIS SHEET MAY NOT BE TRANSFERED FROM THE CUSTODY OF THE COMPETENT DIVISION OF R&D DEPARTMENT EXCEPT AS AUTHORIZED BY COMPAL ELECTRONICS, INC. NEITHER THIS SHEET NOR THE INFORMATION IT CONTAINS MAY BE USED BY OR DISCLOSED TO ANY THIRD PARTY WITHOUT PRIOR WRITTEN CONSENT OF COMPAL ELECTRONICS, INC.

**Compal Electronics, Inc.**

Title: **PCH-SPI/SATA/LPC/RTC/HDA**

Size: B | Document Number: **PWWAA LA6842P M/B** | Rev: 0.2

Date: Wednesday, July 28, 2010 | Sheet 16 of 45

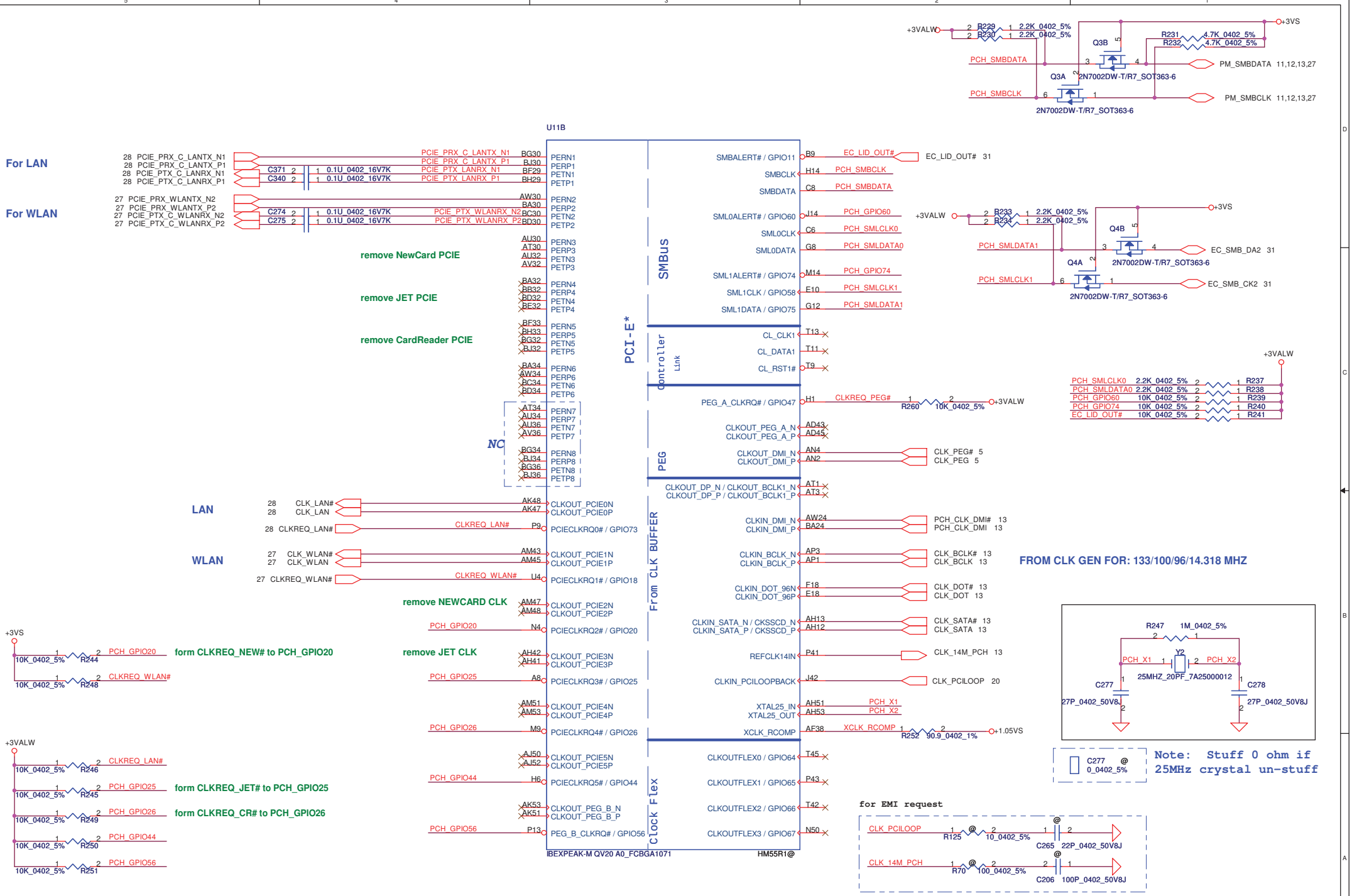


| Security Classification | Compal Secret Data | | |
|---|---|---|---|
| Issued Date | 2010/06/21 | Deciphered Date | 2011/06/21 |

THIS SHEET OF ENGINEERING DRAWING IS THE PROPRIETARY PROPERTY OF COMPAL ELECTRONICS, INC. AND CONTAINS CONFIDENTIAL AND TRADE SECRET INFORMATION. THIS SHEET MAY NOT BE TRANSFERED FROM THE CUSTODY OF THE COMPETENT DIVISION OF R&D DEPARTMENT EXCEPT AS AUTHORIZED BY COMPAL ELECTRONICS, INC. NEITHER THIS SHEET NOR THE INFORMATION IT CONTAINS MAY BE USED BY OR DISCLOSED TO ANY THIRD PARTY WITHOUT PRIOR WRITTEN CONSENT OF COMPAL ELECTRONICS, INC.

**Compal Electronics, Inc.**

Title: **CLK/PCIE/SMBUS**

Size: B | Document Number: **PWWAA LA6842P M/B** | Rev: 0.2

Date: Wednesday, July 28, 2010 | Sheet 17 of 45

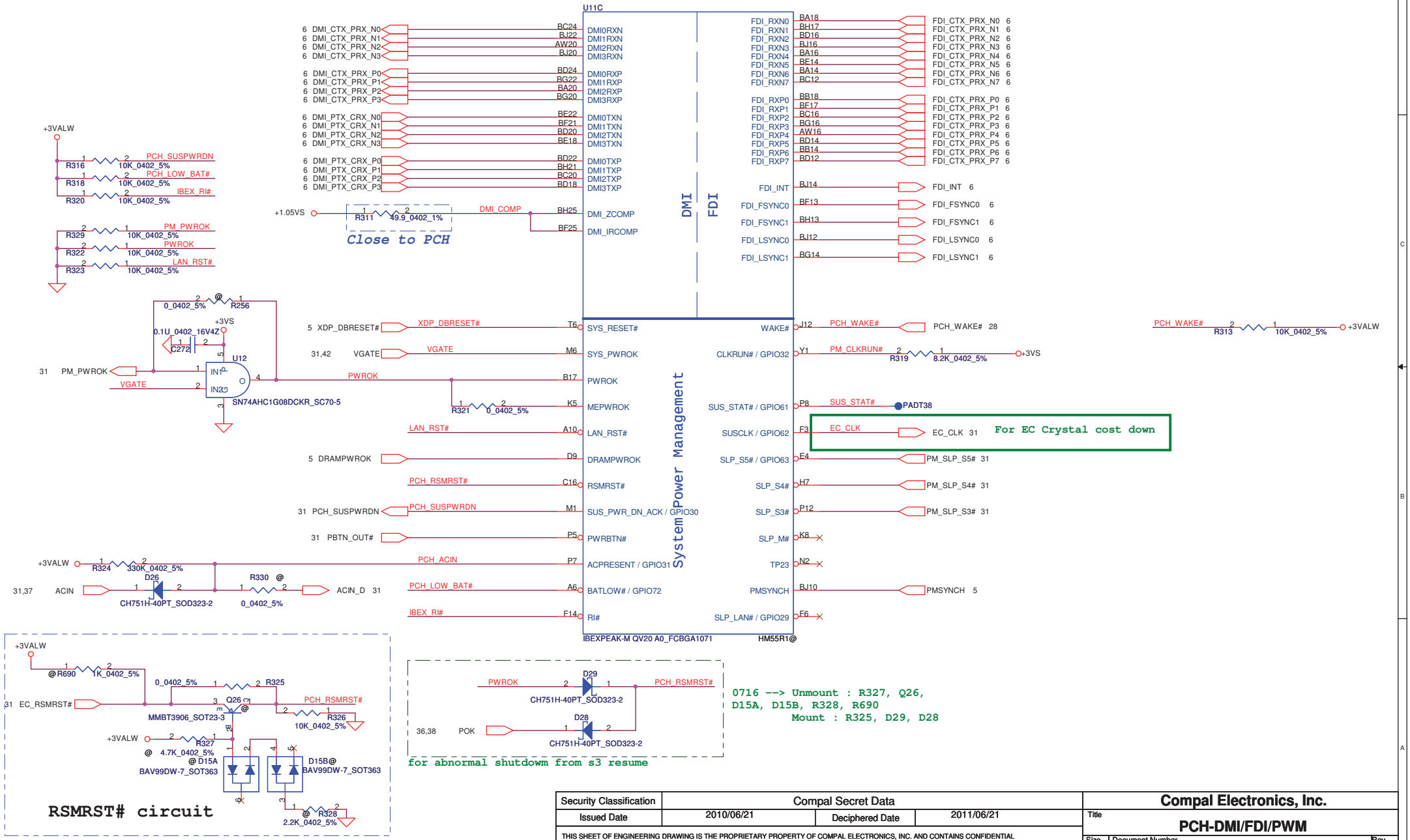


| Security Classification | Compal Secret Data | | |
|---|---|---|---|
| Issued Date | 2010/06/21 | Deciphered Date | 2011/06/21 |

THIS SHEET OF ENGINEERING DRAWING IS THE PROPRIETARY PROPERTY OF COMPAL ELECTRONICS, INC. AND CONTAINS CONFIDENTIAL AND TRADE SECRET INFORMATION. THIS SHEET MAY NOT BE TRANSFERED FROM THE CUSTODY OF THE COMPETENT DIVISION OF R&D DEPARTMENT EXCEPT AS AUTHORIZED BY COMPAL ELECTRONICS, INC. NEITHER THIS SHEET NOR THE INFORMATION IT CONTAINS MAY BE USED BY OR DISCLOSED TO ANY THIRD PARTY WITHOUT PRIOR WRITTEN CONSENT OF COMPAL ELECTRONICS, INC.

**Compal Electronics, Inc.**

Title: **PCH-DMI/FDI/PWM**

Size: B | Document Number: **PWWAA LA6842P M/B** | Rev: 0.2

Date: Wednesday, July 28, 2010 | Sheet 18 of 45

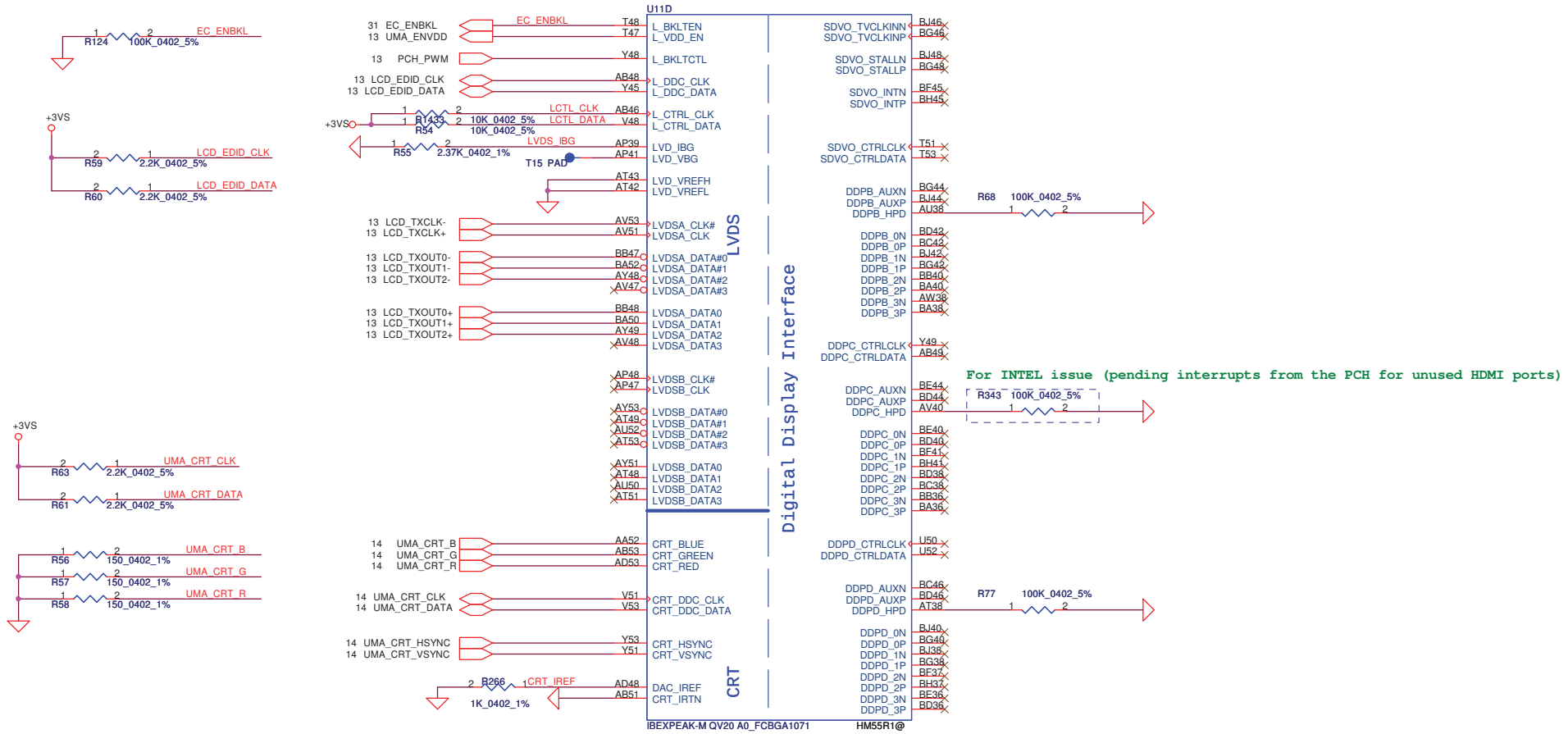


# PCH Strap Pin

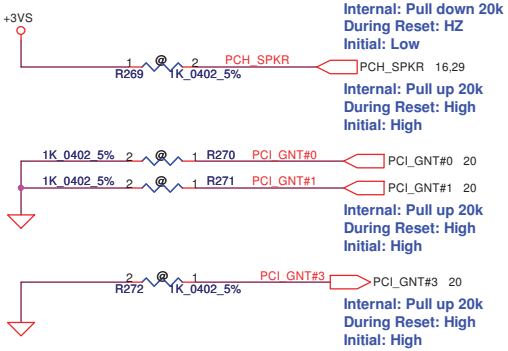


| NO REBOOT Strap | |
|---|---|
| PCH_SPKR | Low= Disable<br>High= Enable |

| Boot BIOS Strap | | |
|---|---|---|
| PCI_GNT#1 | PCI_GNT#0 | Boot BIOS Loaction |
| 0 | 0 | LPC |
| 0 | 1 | Reserved (NAND) |
| 1 | 0 | PCI |
| 1 | 1 | SPI (Default) |

| A16 Swap Override Strap | |
|---|---|
| PCI_GNT#3 | Low= A16 swap override Enable<br>High= A16 swap override Disable |

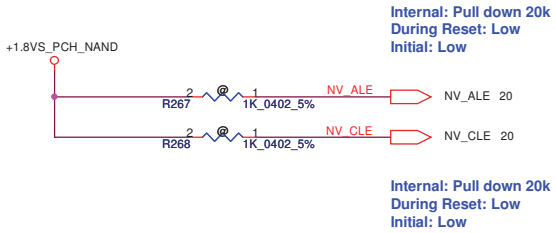


| Danbury Technology Enabled | |
|---|---|
| NV_ALE | High = Enabled<br>Low = Disabled (Default) |

| DMI Termination Voltage | |
|---|---|
| NV_CLE | Low= Set to Vss (Default)<br>High= Set to Vcc |

| Security Classification | Compal Secret Data | | |
|---|---|---|---|
| Issued Date | 2010/06/21 | Deciphered Date | 2011/06/21 |

THIS SHEET OF ENGINEERING DRAWING IS THE PROPRIETARY PROPERTY OF COMPAL ELECTRONICS, INC. AND CONTAINS CONFIDENTIAL AND TRADE SECRET INFORMATION. THIS SHEET MAY NOT BE TRANSFERED FROM THE CUSTODY OF THE COMPETENT DIVISION OF R&D DEPARTMENT EXCEPT AS AUTHORIZED BY COMPAL ELECTRONICS, INC. NEITHER THIS SHEET NOR THE INFORMATION IT CONTAINS MAY BE USED BY OR DISCLOSED TO ANY THIRD PARTY WITHOUT PRIOR WRITTEN CONSENT OF COMPAL ELECTRONICS, INC.

**Compal Electronics, Inc.**

Title: **PCH-CRT/LVDS/HDMI**

Size: Custom | Document Number: **PWWAA LA6842P M/B** | Rev: 0.2

Date: Wednesday, July 28, 2010 | Sheet 19 of 45

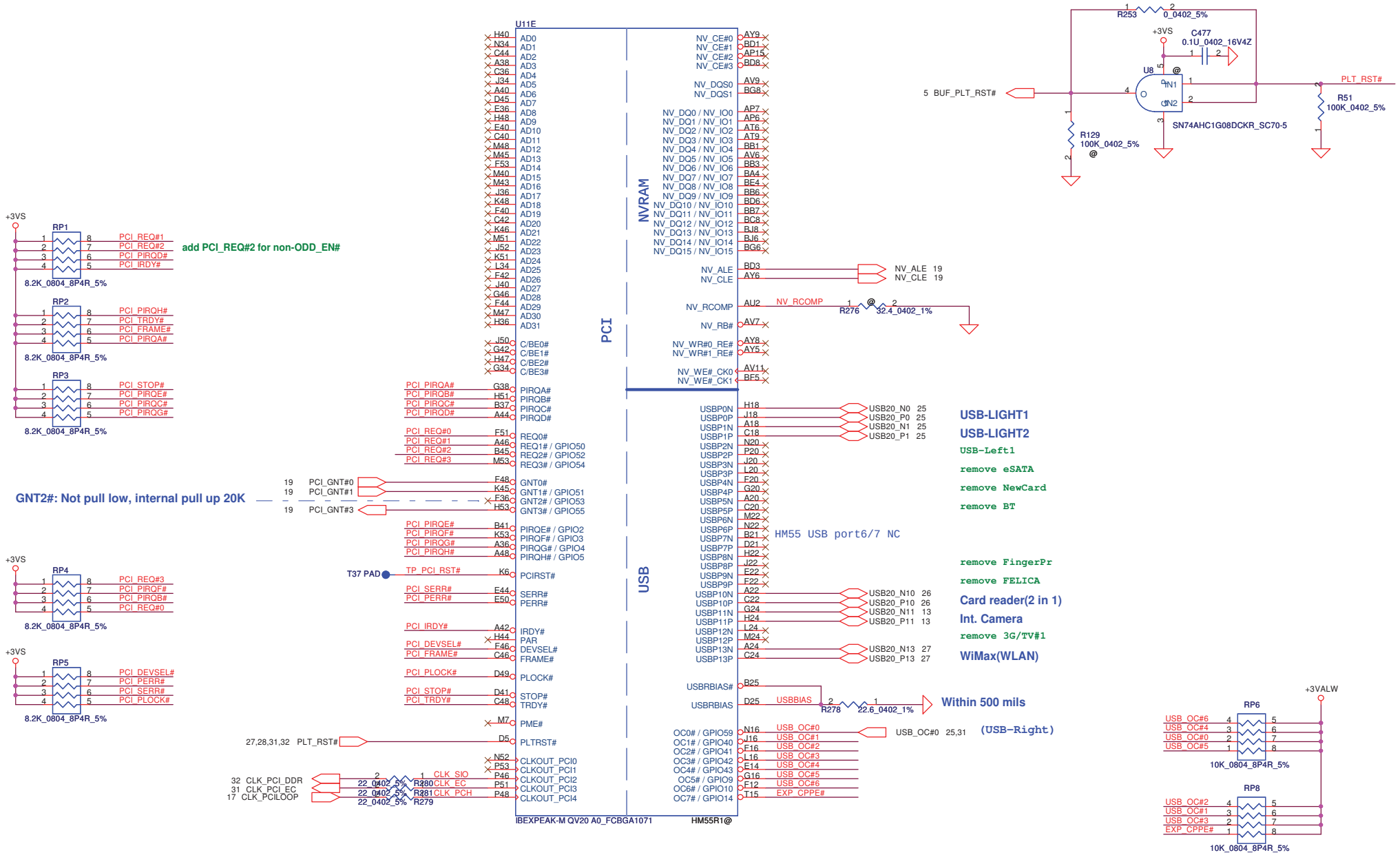


| Security Classification | Compal Secret Data | | |
|---|---|---|---|
| Issued Date | 2010/06/21 | Deciphered Date | 2011/06/21 |

THIS SHEET OF ENGINEERING DRAWING IS THE PROPRIETARY PROPERTY OF COMPAL ELECTRONICS, INC. AND CONTAINS CONFIDENTIAL AND TRADE SECRET INFORMATION. THIS SHEET MAY NOT BE TRANSFERED FROM THE CUSTODY OF THE COMPETENT DIVISION OF R&D DEPARTMENT EXCEPT AS AUTHORIZED BY COMPAL ELECTRONICS, INC. NEITHER THIS SHEET NOR THE INFORMATION IT CONTAINS MAY BE USED BY OR DISCLOSED TO ANY THIRD PARTY WITHOUT PRIOR WRITTEN CONSENT OF COMPAL ELECTRONICS, INC.

**Compal Electronics, Inc.**

Title: **PCH USB/PCI/NAND**

Size: B | Document Number: **PWWAA LA6842P M/B** | Rev: 0.2

Date: Wednesday, July 28, 2010 | Sheet 20 of 45

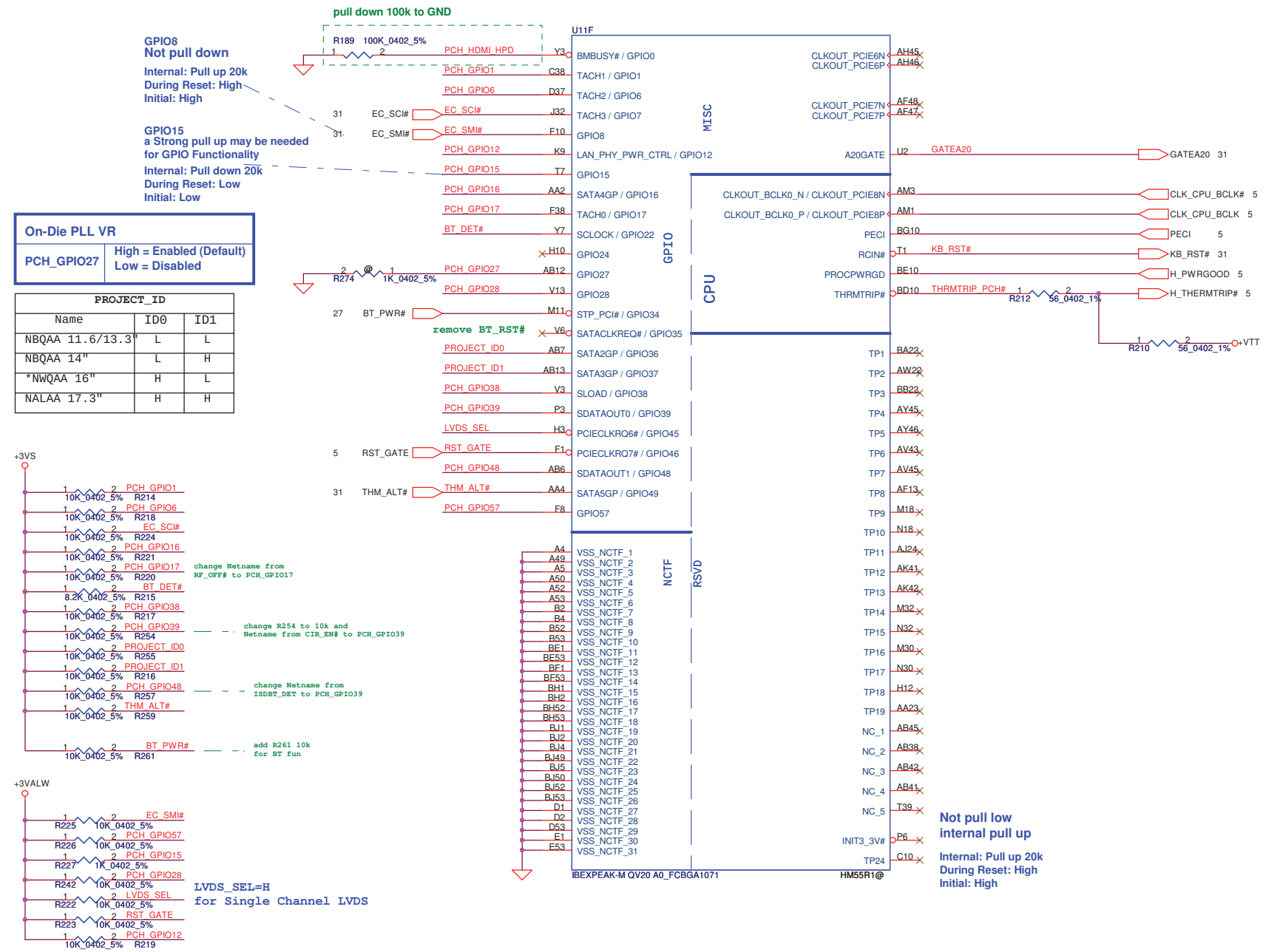


## On-Die PLL VR

| | |
|---|---|
| PCH_GPIO27 | High = Enabled (Default)<br>Low = Disabled |

| PROJECT_ID | | |
|---|---|---|
| Name | ID0 | ID1 |
| NBQAA 11.6/13.3" | L | L |
| NBQAA 14" | L | H |
| *NWQAA 16" | H | L |
| NALAA 17.3" | H | H |

| | | | |
|---|---|---|---|
| Security Classification | Compal Secret Data | | |
| Issued Date | 2010/06/21 | Deciphered Date | 2011/06/21 |

THIS SHEET OF ENGINEERING DRAWING IS THE PROPRIETARY PROPERTY OF COMPAL ELECTRONICS, INC. AND CONTAINS CONFIDENTIAL AND TRADE SECRET INFORMATION. THIS SHEET MAY NOT BE TRANSFERED FROM THE CUSTODY OF THE COMPETENT DIVISION OF R&D DEPARTMENT EXCEPT AS AUTHORIZED BY COMPAL ELECTRONICS, INC. NEITHER THIS SHEET NOR THE INFORMATION IT CONTAINS MAY BE USED BY OR DISCLOSED TO ANY THIRD PARTY WITHOUT PRIOR WRITTEN CONSENT OF COMPAL ELECTRONICS, INC.

**Compal Electronics, Inc.**

Title: **PCH CPU/GPIO**

Size: B | Document Number: **PWWAA LA6842P M/B** | Rev: 0.2

Date: Wednesday, July 28, 2010 | Sheet 21 of 45

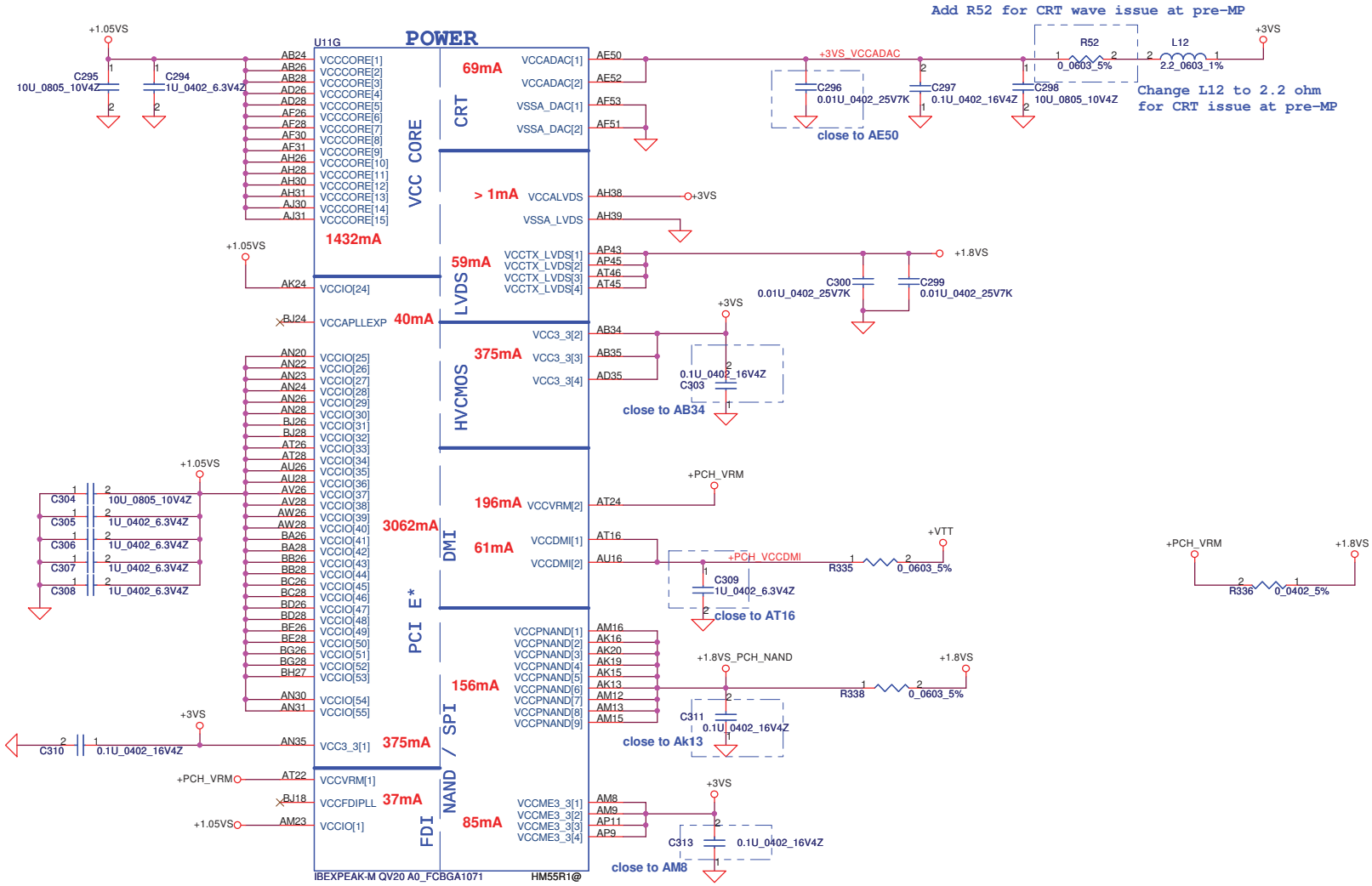


| Security Classification | Compal Secret Data | | |
|---|---|---|---|
| Issued Date | 2010/06/21 | Deciphered Date | 2011/06/21 |

THIS SHEET OF ENGINEERING DRAWING IS THE PROPRIETARY PROPERTY OF COMPAL ELECTRONICS, INC. AND CONTAINS CONFIDENTIAL AND TRADE SECRET INFORMATION. THIS SHEET MAY NOT BE TRANSFERED FROM THE CUSTODY OF THE COMPETENT DIVISION OF R&D DEPARTMENT EXCEPT AS AUTHORIZED BY COMPAL ELECTRONICS, INC. NEITHER THIS SHEET NOR THE INFORMATION IT CONTAINS MAY BE USED BY OR DISCLOSED TO ANY THIRD PARTY WITHOUT PRIOR WRITTEN CONSENT OF COMPAL ELECTRONICS, INC.

**Compal Electronics, Inc.**

Title: **PCH POWER-1**

Size: B | Document Number: **PWWAA LA6842P M/B** | Rev: 0.2

Date: Wednesday, July 28, 2010 | Sheet 22 of 45

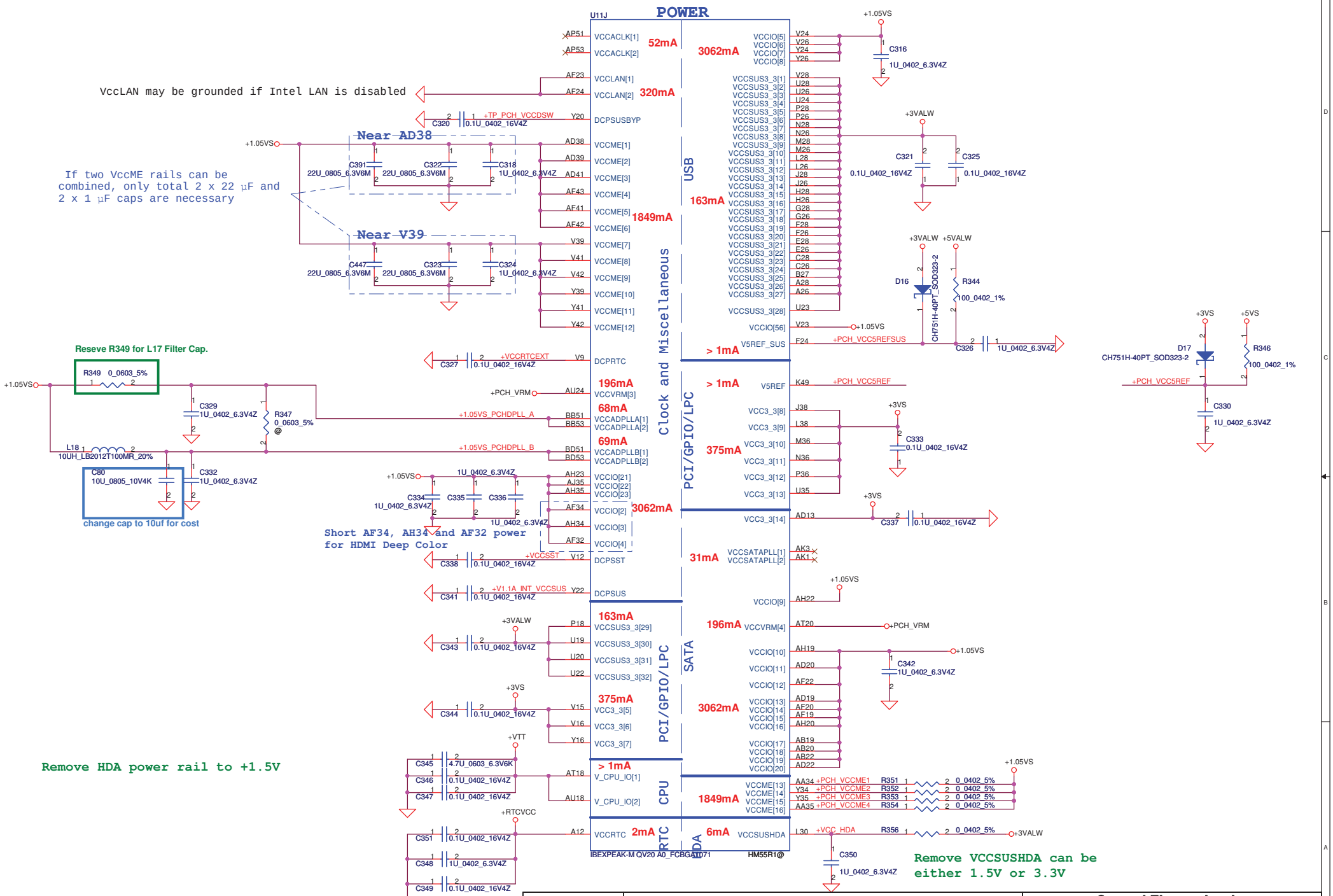


| Security Classification | Compal Secret Data | | |
|---|---|---|---|
| Issued Date | 2010/06/21 | Deciphered Date | 2011/06/21 |

THIS SHEET OF ENGINEERING DRAWING IS THE PROPRIETARY PROPERTY OF COMPAL ELECTRONICS, INC. AND CONTAINS CONFIDENTIAL AND TRADE SECRET INFORMATION. THIS SHEET MAY NOT BE TRANSFERED FROM THE CUSTODY OF THE COMPETENT DIVISION OF R&D DEPARTMENT EXCEPT AS AUTHORIZED BY COMPAL ELECTRONICS, INC. NEITHER THIS SHEET NOR THE INFORMATION IT CONTAINS MAY BE USED BY OR DISCLOSED TO ANY THIRD PARTY WITHOUT PRIOR WRITTEN CONSENT OF COMPAL ELECTRONICS, INC.

**Compal Electronics, Inc.**

Title: **PCH POWER-2**

Size: Custom | Document Number: **PWWAA LA6842P M/B** | Rev: 0.2

Date: Wednesday, July 28, 2010 | Sheet 23 of 45

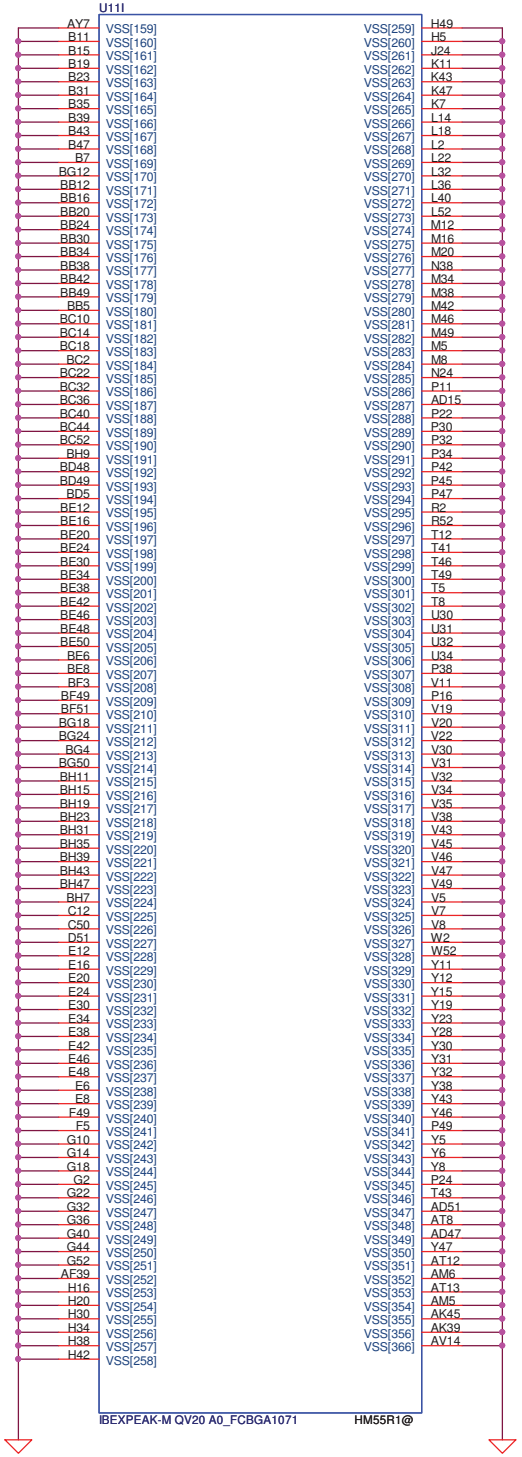


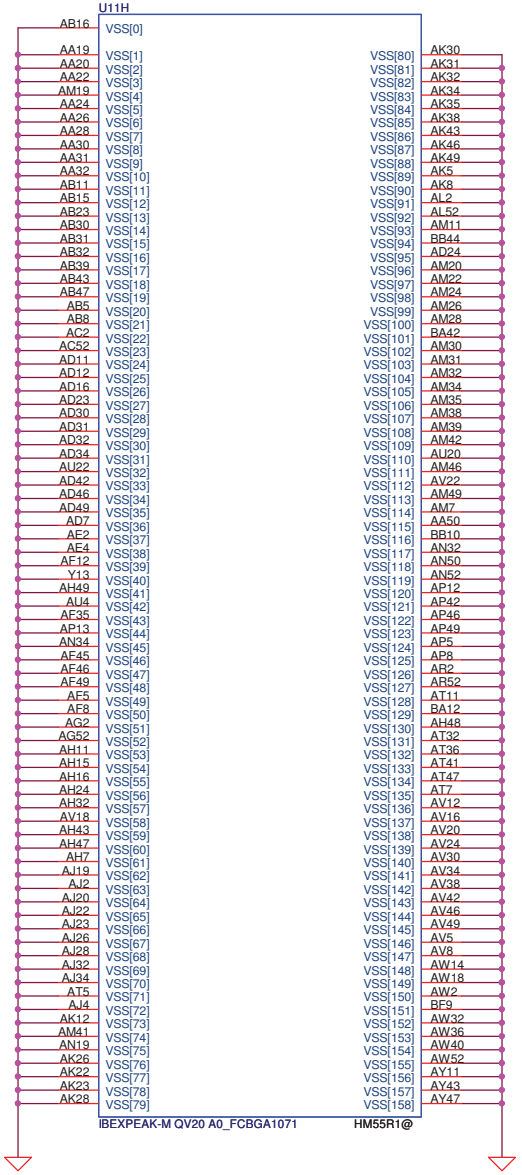


| Security Classification | Compal Secret Data | | |
|---|---|---|---|
| Issued Date | 2010/06/21 | Deciphered Date | 2011/06/21 |

THIS SHEET OF ENGINEERING DRAWING IS THE PROPRIETARY PROPERTY OF COMPAL ELECTRONICS, INC. AND CONTAINS CONFIDENTIAL AND TRADE SECRET INFORMATION. THIS SHEET MAY NOT BE TRANSFERED FROM THE CUSTODY OF THE COMPETENT DIVISION OF R&D DEPARTMENT EXCEPT AS AUTHORIZED BY COMPAL ELECTRONICS, INC. NEITHER THIS SHEET NOR THE INFORMATION IT CONTAINS MAY BE USED BY OR DISCLOSED TO ANY THIRD PARTY WITHOUT PRIOR WRITTEN CONSENT OF COMPAL ELECTRONICS, INC.

**Compal Electronics, Inc.**

Title: **PCH-GND**

Size: Custom | Document Number: **PWWAA LA6842P M/B** | Rev: 0.2

Date: Wednesday, July 28, 2010 | Sheet 24 of 45

# SATA HDD Conn.

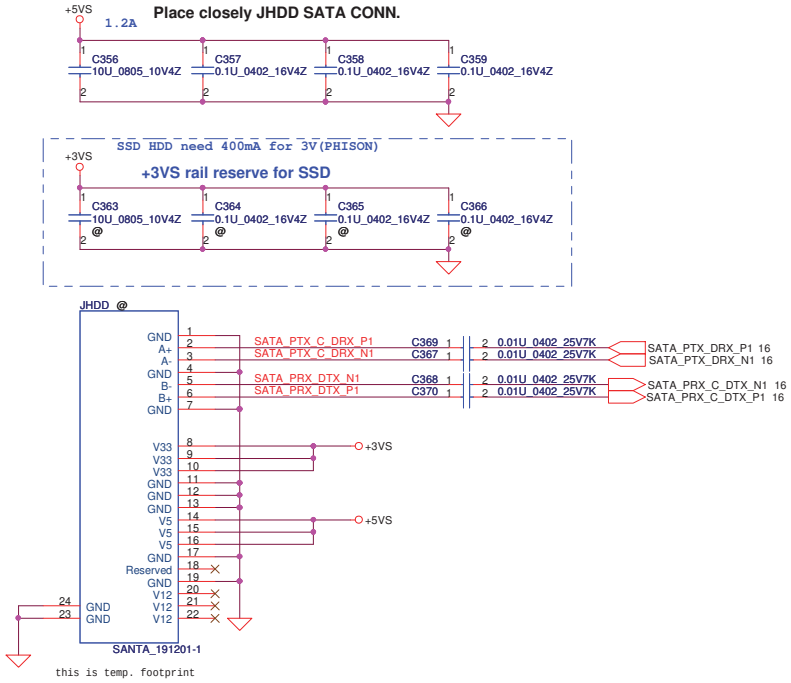


# SATA ODD Conn

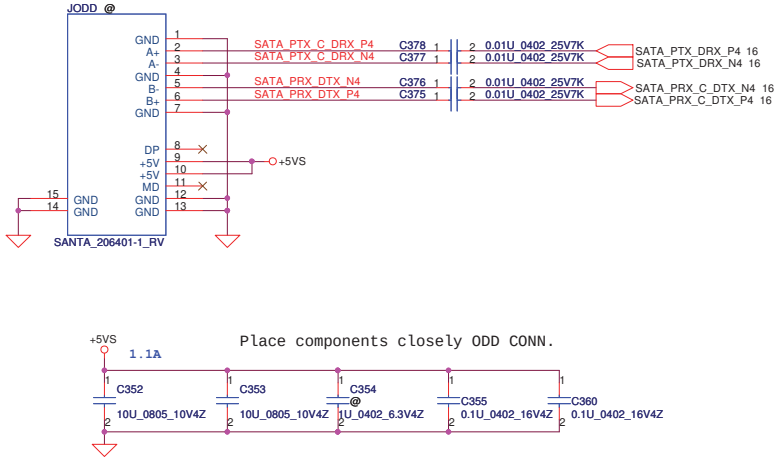


# USB Conn. (2 Port)

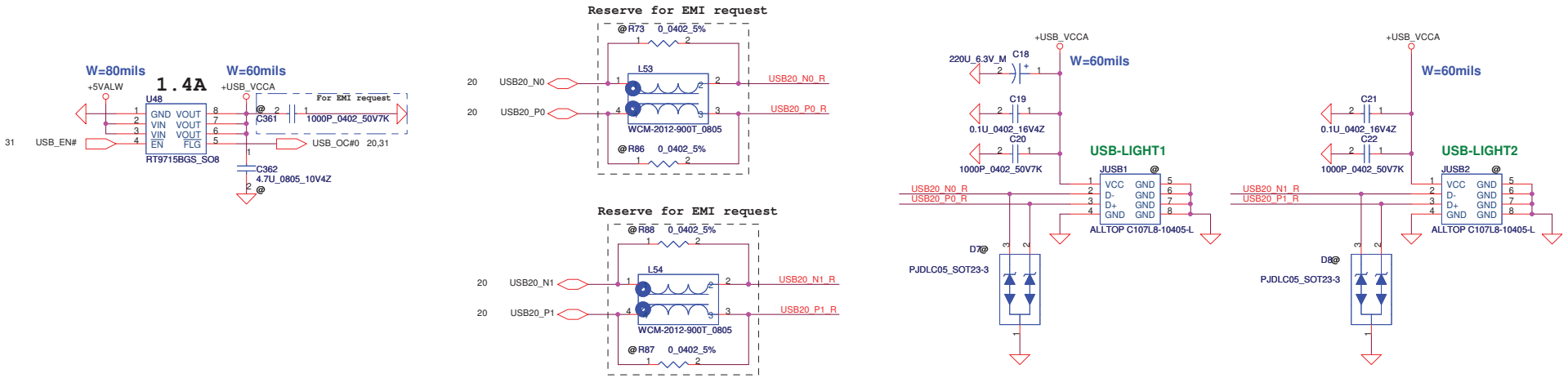


| Security Classification | Compal Secret Data | | |
|---|---|---|---|
| Issued Date | 2010/06/21 | Deciphered Date | 2011/06/21 |

THIS SHEET OF ENGINEERING DRAWING IS THE PROPRIETARY PROPERTY OF COMPAL ELECTRONICS, INC. AND CONTAINS CONFIDENTIAL AND TRADE SECRET INFORMATION. THIS SHEET MAY NOT BE TRANSFERED FROM THE CUSTODY OF THE COMPETENT DIVISION OF R&D DEPARTMENT EXCEPT AS AUTHORIZED BY COMPAL ELECTRONICS, INC. NEITHER THIS SHEET NOR THE INFORMATION IT CONTAINS MAY BE USED BY OR DISCLOSED TO ANY THIRD PARTY WITHOUT PRIOR WRITTEN CONSENT OF COMPAL ELECTRONICS, INC.

**Compal Electronics, Inc.**

Title: SATA-HDD/ODD/USB

Size | Document Number: PWWAA LA6842P M/B | Rev: 0.2

Date: Wednesday, July 28, 2010 | Sheet 25 of 45

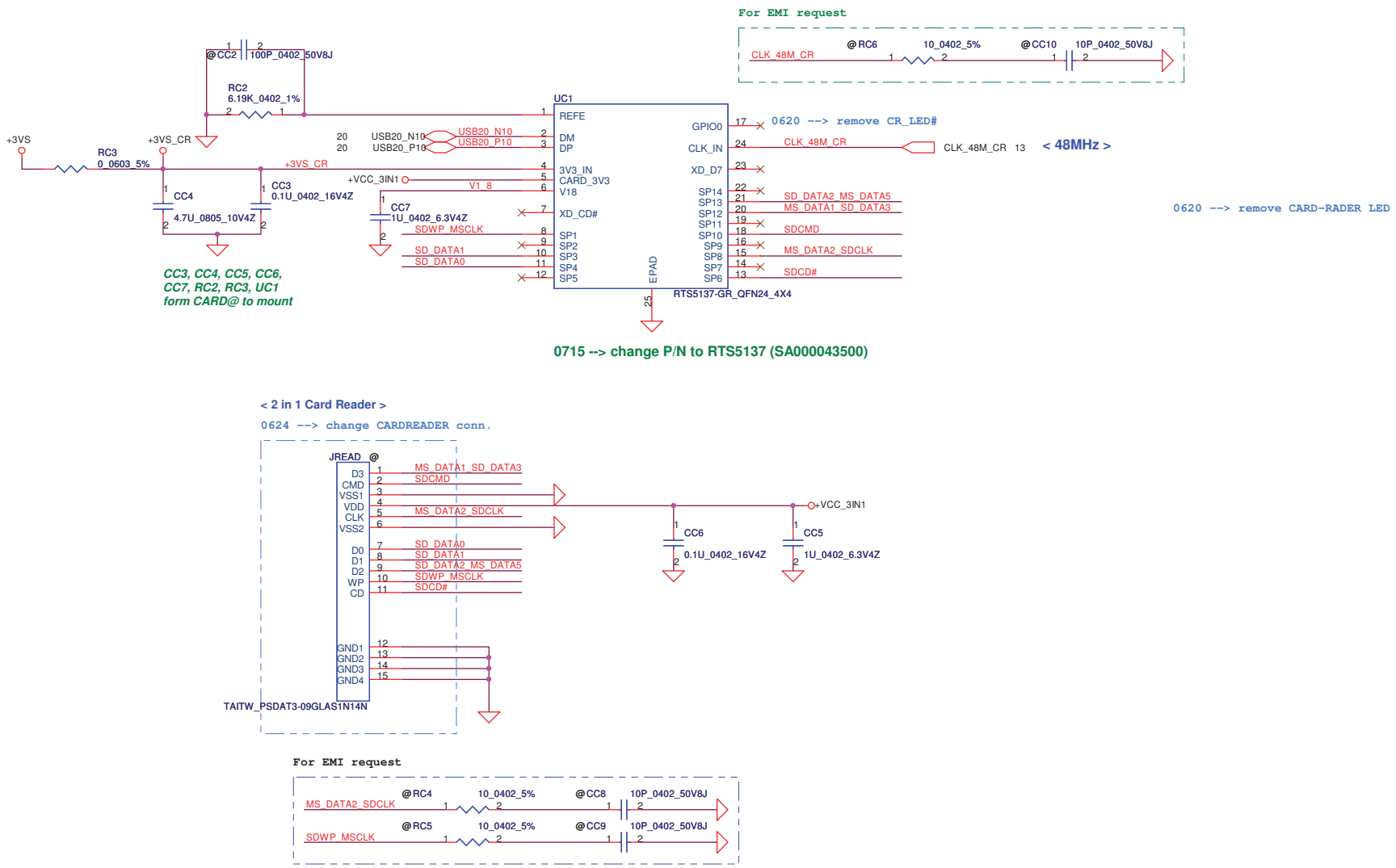


| Security Classification | Compal Secret Data | | |
|---|---|---|---|
| Issued Date | 2010/06/21 | Deciphered Date | 2011/06/21 |

THIS SHEET OF ENGINEERING DRAWING IS THE PROPRIETARY PROPERTY OF COMPAL ELECTRONICS, INC. AND CONTAINS CONFIDENTIAL AND TRADE SECRET INFORMATION. THIS SHEET MAY NOT BE TRANSFERED FROM THE CUSTODY OF THE COMPETENT DIVISION OF R&D DEPARTMENT EXCEPT AS AUTHORIZED BY COMPAL ELECTRONICS, INC. NEITHER THIS SHEET NOR THE INFORMATION IT CONTAINS MAY BE USED BY OR DISCLOSED TO ANY THIRD PARTY WITHOUT PRIOR WRITTEN CONSENT OF COMPAL ELECTRONICS, INC.

**Compal Electronics, Inc.**

Title: RTS5137 2in1 Card Reader

Size | Document Number: PWWAA LA6842P M/B | Rev: 0.2

Date: Wednesday, July 28, 2010 | Sheet 26 of 45

# PCIe Mini Card-WLAN/WiMax

**WLAN&BT Combo module circuits**

| | BT on module Enable | BT on module Disable |
|---|---|---|
| BT_CRTL | HI | LO |
| BT_PWR# | LO | HI |

**If +3V_WLAN is +3VS, please remove D24.

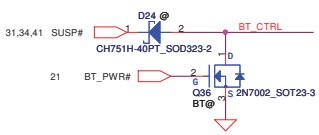


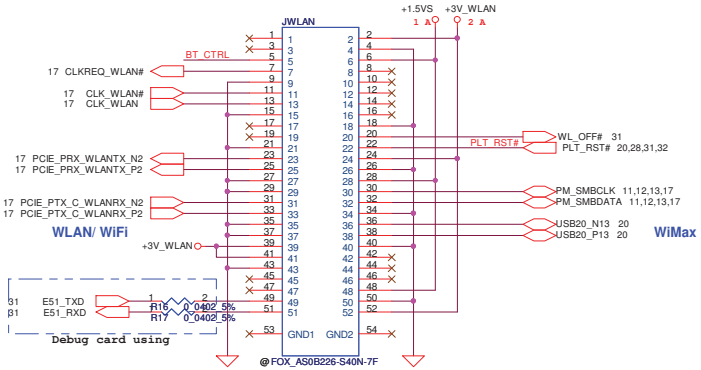


## Slot#1 Half PCIe Mini Card-WLAN/WiMax

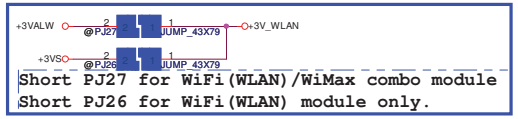


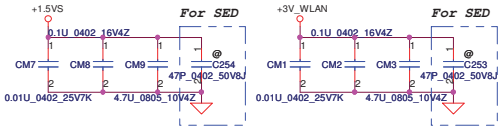


| Security Classification | Compal Secret Data | Compal Electronics, Inc. | |
|---|---|---|---|
| Issued Date | 2010/06/21 | Deciphered Date | 2011/06/21 |

THIS SHEET OF ENGINEERING DRAWING IS THE PROPRIETARY PROPERTY OF COMPAL ELECTRONICS, INC. AND CONTAINS CONFIDENTIAL AND TRADE SECRET INFORMATION. THIS SHEET MAY NOT BE TRANSFERED FROM THE CUSTODY OF THE COMPETENT DIVISION OF R&D DEPARTMENT EXCEPT AS AUTHORIZED BY COMPAL ELECTRONICS, INC. NEITHER THIS SHEET NOR THE INFORMATION IT CONTAINS MAY BE USED BY OR DISCLOSED TO ANY THIRD PARTY WITHOUT PRIOR WRITTEN CONSENT OF COMPAL ELECTRONICS, INC.

| Title | PCIe-WLAN | |
|---|---|---|
| Size | Document Number PWWAA LA6842P M/B | Rev 0.2 |
| Date: Wednesday, July 28, 2010 | Sheet 27 of 45 | |

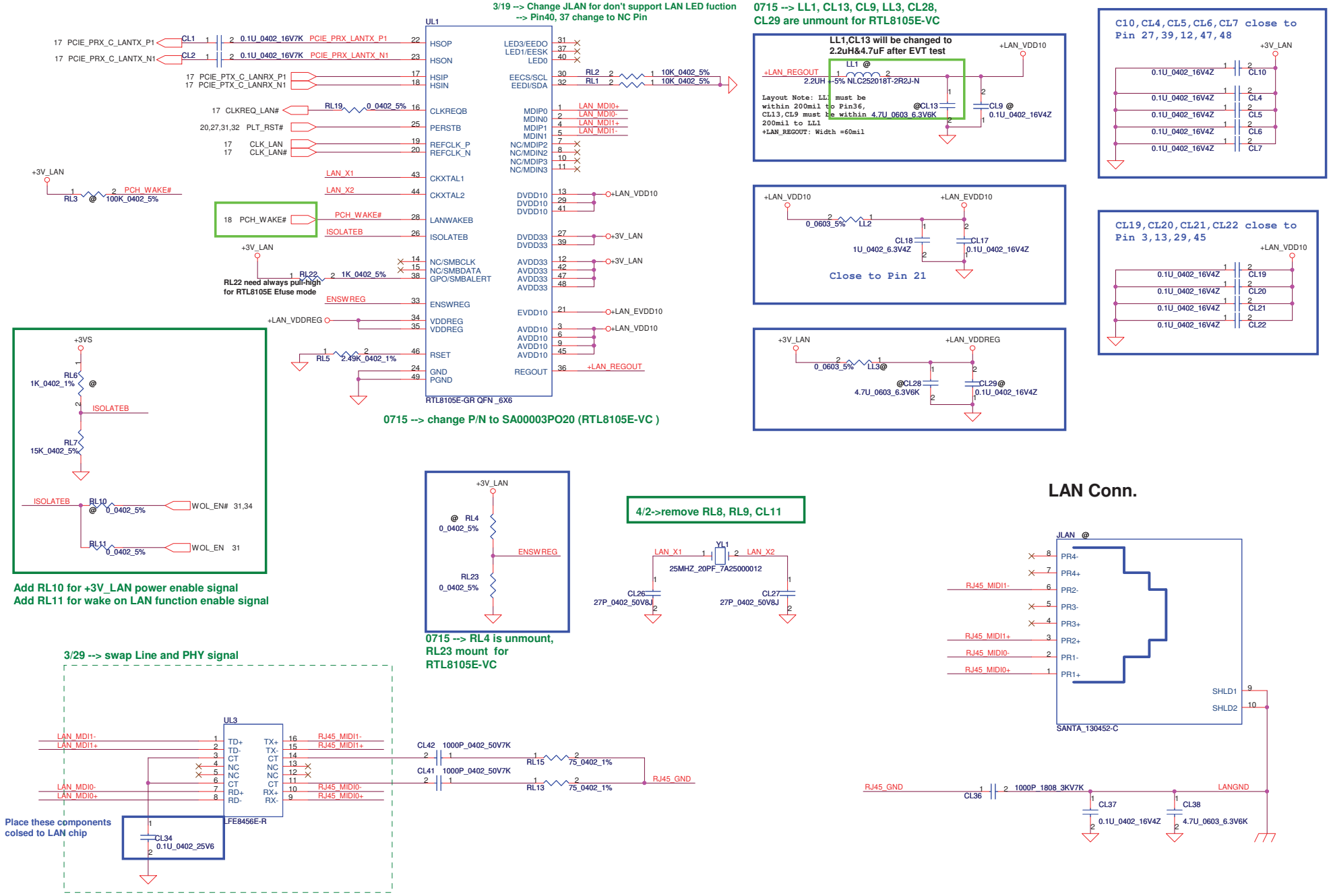


| Security Classification | Compal Secret Data | | |
|---|---|---|---|
| Issued Date | 2010/06/21 | Deciphered Date | 2011/06/21 |

THIS SHEET OF ENGINEERING DRAWING IS THE PROPRIETARY PROPERTY OF COMPAL ELECTRONICS, INC. AND CONTAINS CONFIDENTIAL AND TRADE SECRET INFORMATION. THIS SHEET MAY NOT BE TRANSFERED FROM THE CUSTODY OF THE COMPETENT DIVISION OF R&D DEPARTMENT EXCEPT AS AUTHORIZED BY COMPAL ELECTRONICS, INC. NEITHER THIS SHEET NOR THE INFORMATION IT CONTAINS MAY BE USED BY OR DISCLOSED TO ANY THIRD PARTY WITHOUT PRIOR WRITTEN CONSENT OF COMPAL ELECTRONICS, INC.

**Compal Electronics, Inc.**

Title: **RTL8105E 10/100 LAN**

Size: Custom | Document Number: PWWAA LA6842P M/B | Rev: 0.2

Date: Wednesday, July 28, 2010 | Sheet 28 of 45

# Codec

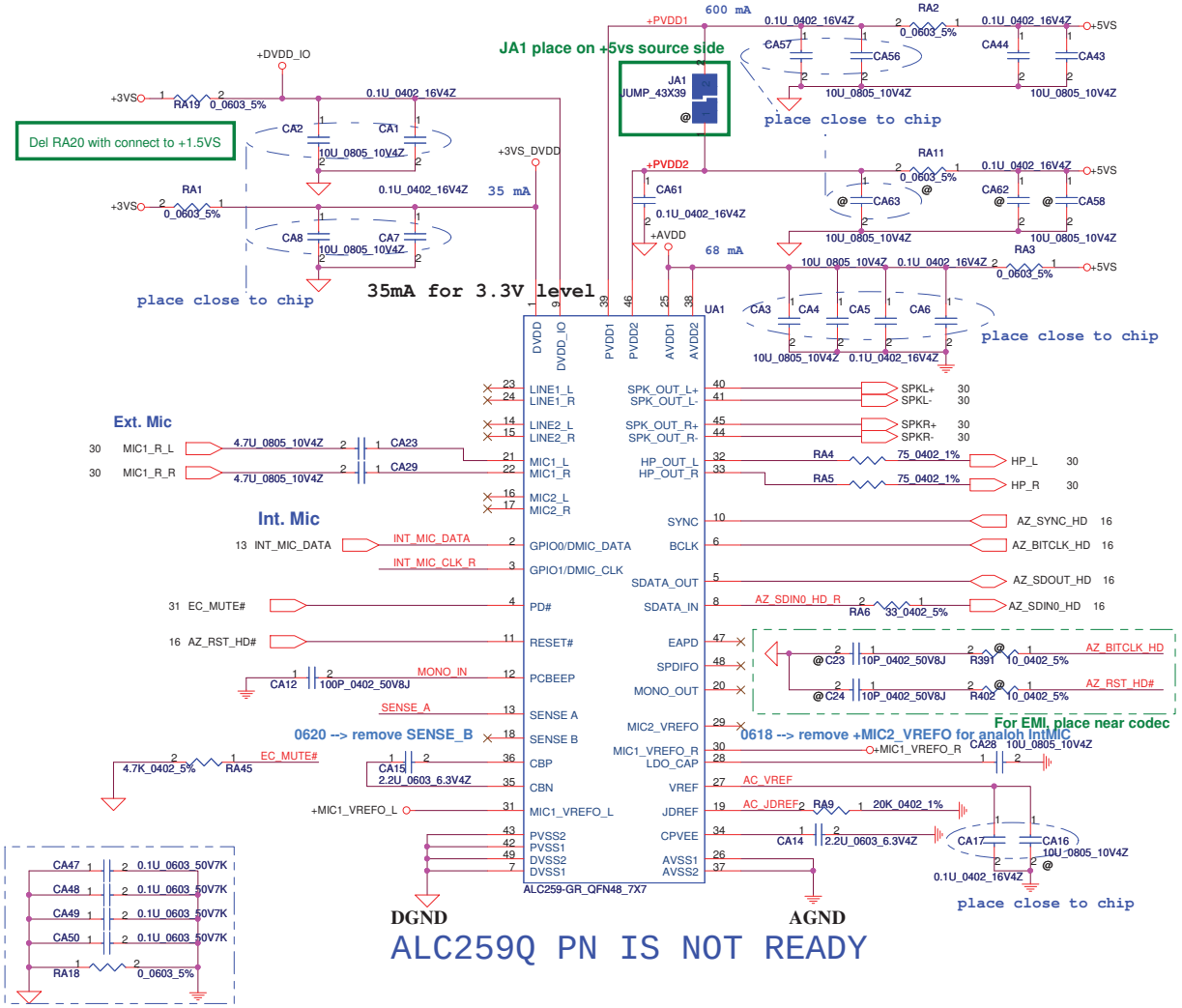


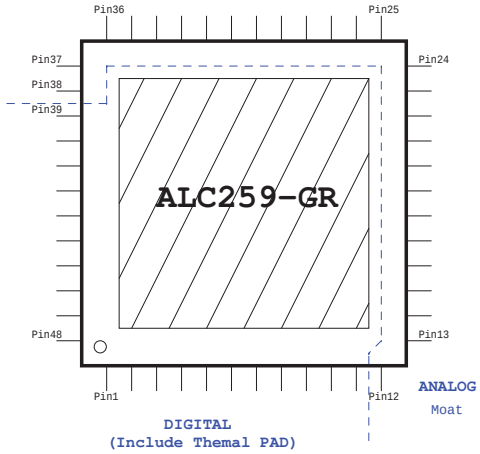


## Beep sound

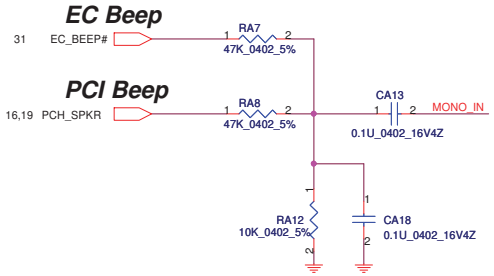


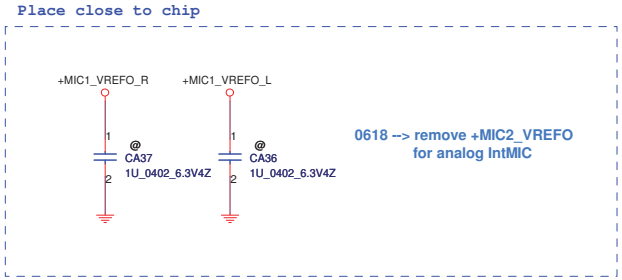


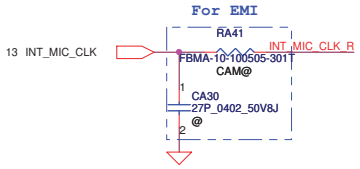


| Sense Pin | Impedance | Codec Signals | Function |
|---|---|---|---|
| SENSE A | 39.2K | PORT-I (PIN 32, 33) | Headphone out |
| | 20K | PORT-B (PIN 21, 22) | Ext. MIC |
| | 10K | PORT-C (PIN 23, 24) | |
| | 5.1K | (PIN 48) | |
| | 39.2K | PORT-E (PIN 14, 15) | |

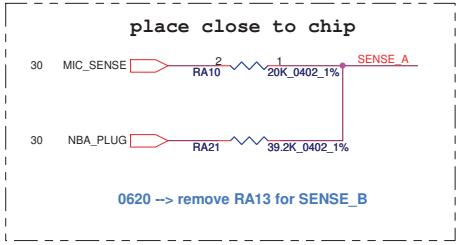


| Security Classification | Compal Secret Data | | |
|---|---|---|---|
| Issued Date | 2010/06/21 | Deciphered Date | 2011/06/21 |

THIS SHEET OF ENGINEERING DRAWING IS THE PROPRIETARY PROPERTY OF COMPAL ELECTRONICS, INC. AND CONTAINS CONFIDENTIAL AND TRADE SECRET INFORMATION. THIS SHEET MAY NOT BE TRANSFERED FROM THE CUSTODY OF THE COMPETENT DIVISION OF R&D DEPARTMENT EXCEPT AS AUTHORIZED BY COMPAL ELECTRONICS, INC. NEITHER THIS SHEET NOR THE INFORMATION IT CONTAINS MAY BE USED BY OR DISCLOSED TO ANY THIRD PARTY WITHOUT PRIOR WRITTEN CONSENT OF COMPAL ELECTRONICS, INC.

Title: HDA CODEC ALC259-GR

Size | Document Number: PWWAA LA6842P M/B | Rev: 0.2

Date: Wednesday, July 28, 2010 | Sheet 29 of 45

## Speaker Connector

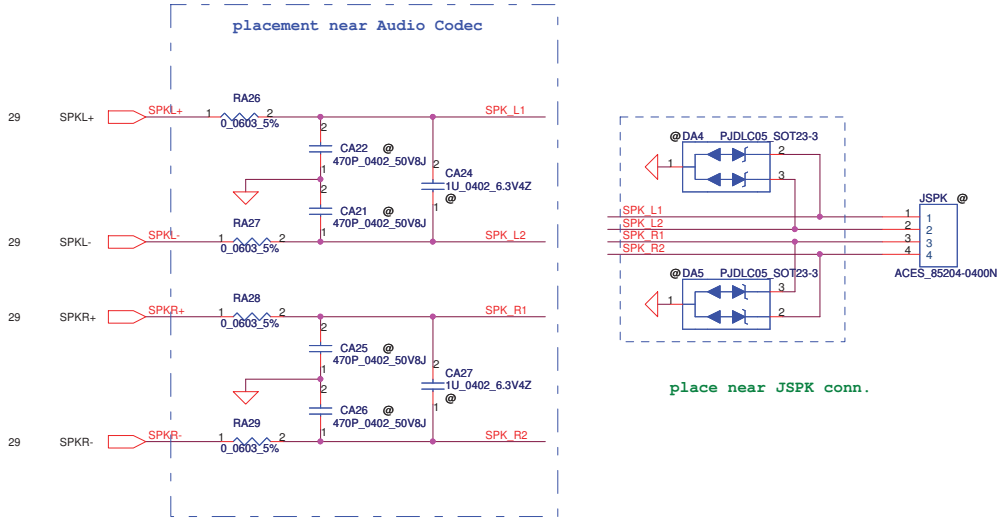





place near JSPK conn.

## Ex.MIC JACK

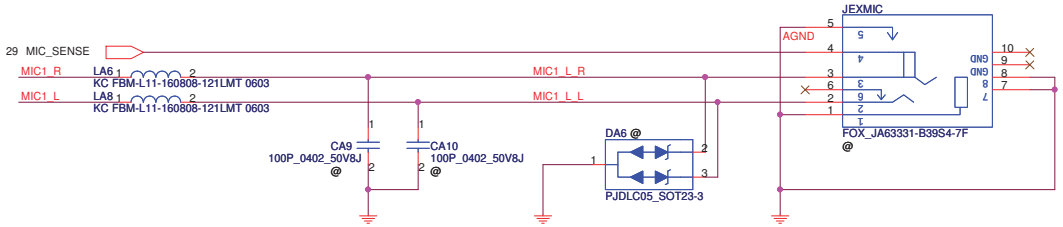


## Head Phone JACK

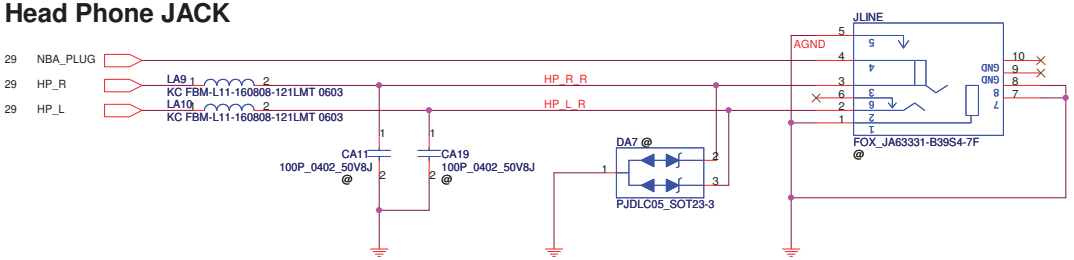


## Ext.MIC/LINE IN

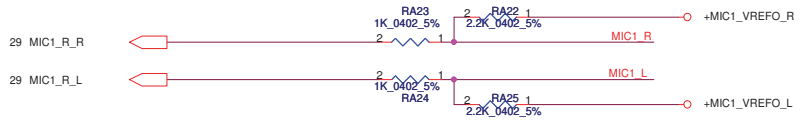


## Int. Mic

0618 --> remove Analog IntMIC, and change to DIGITAL MIC

| Security Classification | Compal Secret Data | | |
|---|---|---|---|
| Issued Date | 2010/06/21 | Deciphered Date | 2011/06/21 |

THIS SHEET OF ENGINEERING DRAWING IS THE PROPRIETARY PROPERTY OF COMPAL ELECTRONICS, INC. AND CONTAINS CONFIDENTIAL AND TRADE SECRET INFORMATION. THIS SHEET MAY NOT BE TRANSFERED FROM THE CUSTODY OF THE COMPETENT DIVISION OF R&D DEPARTMENT EXCEPT AS AUTHORIZED BY COMPAL ELECTRONICS, INC. NEITHER THIS SHEET NOR THE INFORMATION IT CONTAINS MAY BE USED BY OR DISCLOSED TO ANY THIRD PARTY WITHOUT PRIOR WRITTEN CONSENT OF COMPAL ELECTRONICS, INC.

Compal Electronics, Inc.

Title: HDA CODEC ALC259-GR

Size | Document Number: PWWAA LA6842P M/B | Rev: 0.2

Date: Wednesday, July 28, 2010 | Sheet 30 of 45

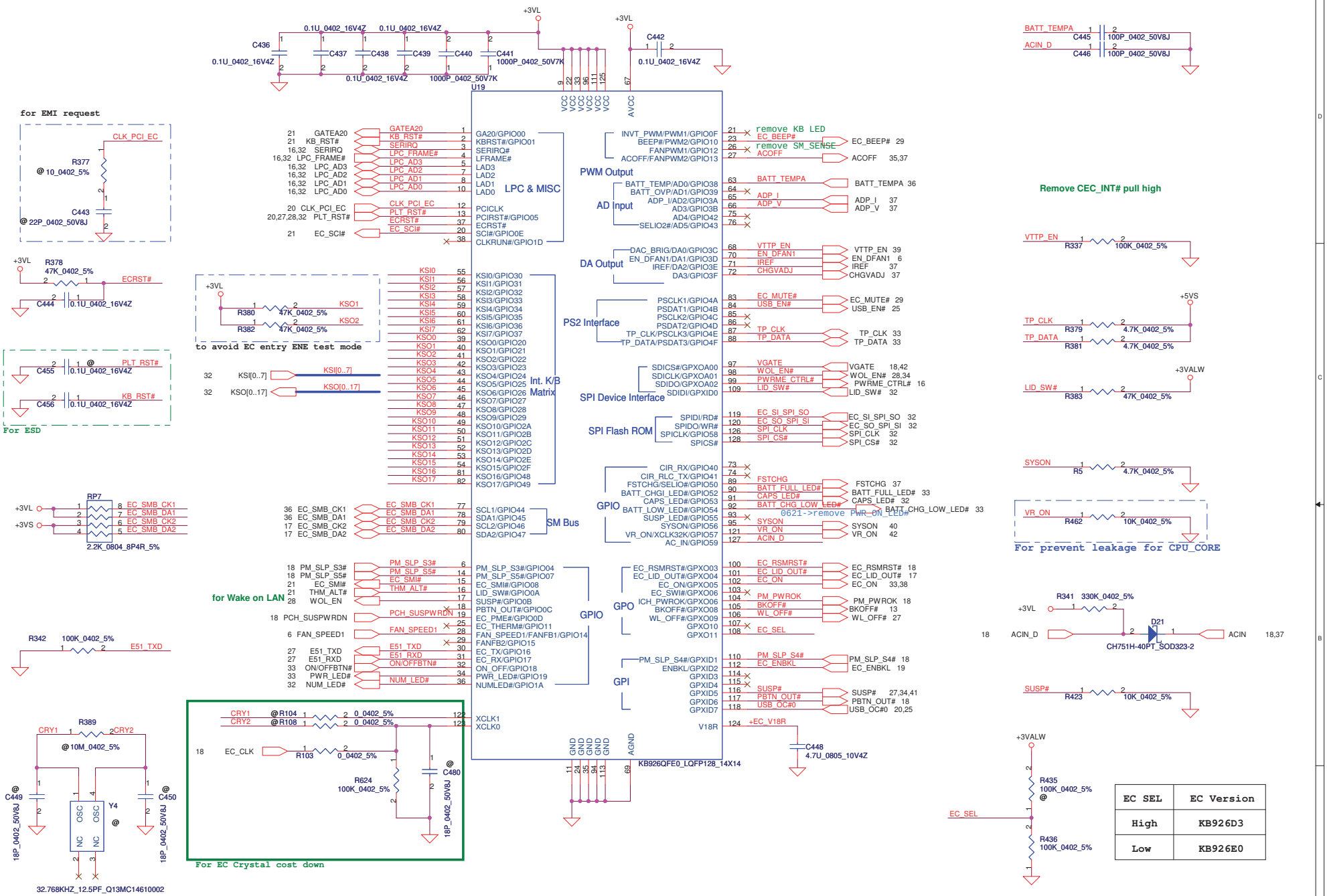


| EC SEL | EC Version |
|---|---|
| High | KB926D3 |
| Low | KB926E0 |

Remove PM_SLP_S4#/S5# AND Gate

| Security Classification | Compal Secret Data | | |
|---|---|---|---|
| Issued Date | 2010/06/21 | Deciphered Date | 2011/06/21 |

THIS SHEET OF ENGINEERING DRAWING IS THE PROPRIETARY PROPERTY OF COMPAL ELECTRONICS, INC. AND CONTAINS CONFIDENTIAL AND TRADE SECRET INFORMATION. THIS SHEET MAY NOT BE TRANSFERED FROM THE CUSTODY OF THE COMPETENT DIVISION OF R&D DEPARTMENT EXCEPT AS AUTHORIZED BY COMPAL ELECTRONICS, INC. NEITHER THIS SHEET NOR THE INFORMATION IT CONTAINS MAY BE USED BY OR DISCLOSED TO ANY THIRD PARTY WITHOUT PRIOR WRITTEN CONSENT OF COMPAL ELECTRONICS, INC.

**Compal Electronics, Inc.**

Title: ENE-KB926 RevD2

Size | Document Number: PWWAA LA6842P M/B | Rev: 0.2

Date: Wednesday, July 28, 2010 | Sheet 31 of 45

## SPI Flash (256KB)

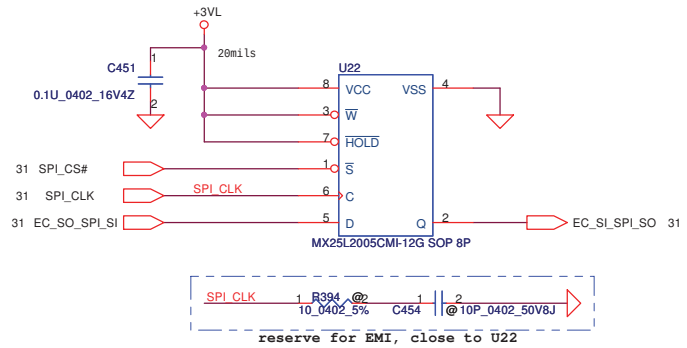


## Lid SW

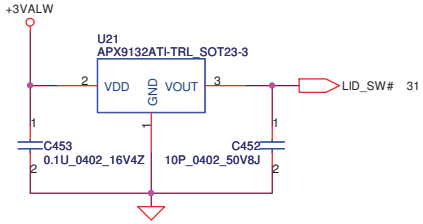


## LPC Debug Port

Please place the PAD under DDR DIMM.

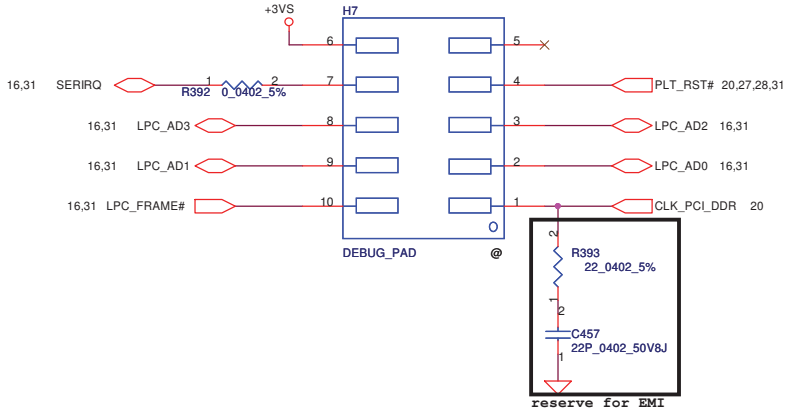


## KEYBOARD CONN.

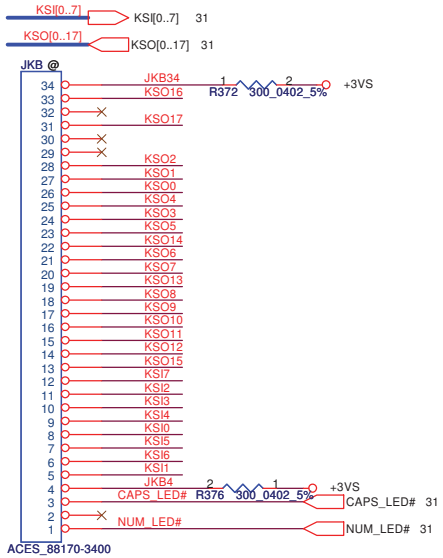


please close to JKB

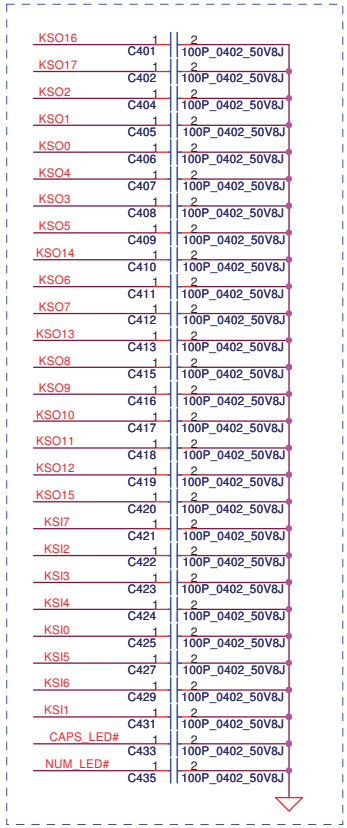


| Security Classification | Compal Secret Data | | |
|---|---|---|---|
| Issued Date | 2010/06/21 | Deciphered Date | 2011/06/21 |

THIS SHEET OF ENGINEERING DRAWING IS THE PROPRIETARY PROPERTY OF COMPAL ELECTRONICS, INC. AND CONTAINS CONFIDENTIAL AND TRADE SECRET INFORMATION. THIS SHEET MAY NOT BE TRANSFERED FROM THE CUSTODY OF THE COMPETENT DIVISION OF R&D DEPARTMENT EXCEPT AS AUTHORIZED BY COMPAL ELECTRONICS, INC. NEITHER THIS SHEET NOR THE INFORMATION IT CONTAINS MAY BE USED BY OR DISCLOSED TO ANY THIRD PARTY WITHOUT PRIOR WRITTEN CONSENT OF COMPAL ELECTRONICS, INC.

*Compal Electronics, Inc.*

Title: SPI ROM/TP/KB/Debug

Size | Document Number: PWWAA LA6842P M/B | Rev 0.2

Date: Wednesday, July 28, 2010 | Sheet 32 of 45

# Power Button

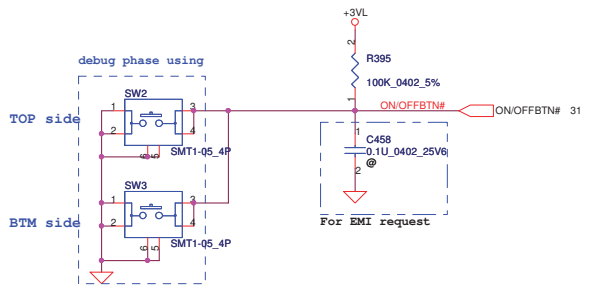


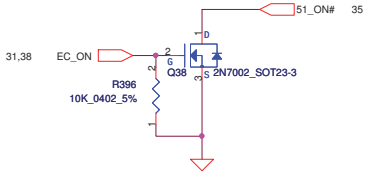


## PWR/B to MB Conn.

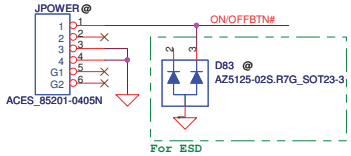


# TP Button/Conn.

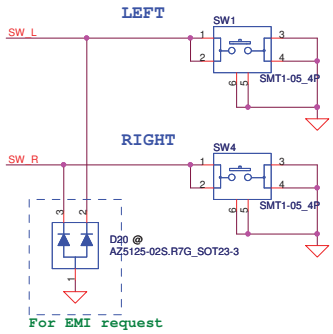


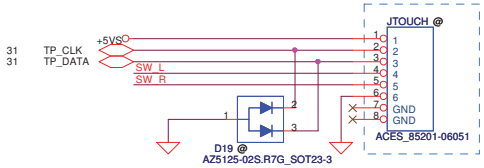


0620->change JTOUCH connector

## POWER/SUSPEND LED

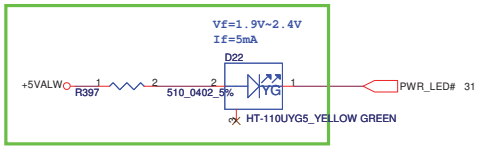


## BATT CHARGE/FULL LED

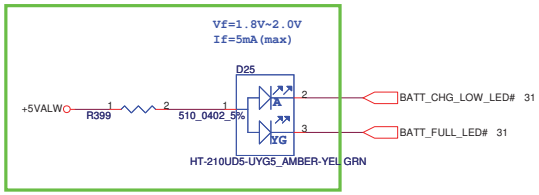


# Screw Hole

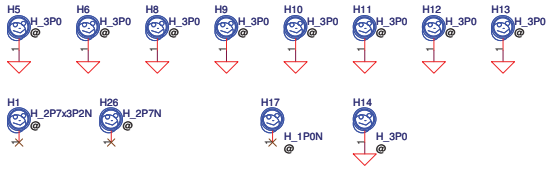


CPU

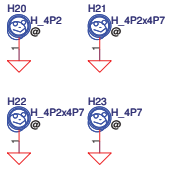


MINI CARD

SB

For Codec AGND
Dummy
3G
MDC

## PCB Fedical Mark PAD

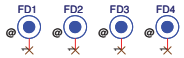


# ISPD

PCB

DC-IN

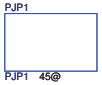


PCH

| Security Classification | Compal Secret Data | | Compal Electronics, Inc. |
|---|---|---|---|
| Issued Date | 2010/06/21 | Deciphered Date | 2011/06/21 |

THIS SHEET OF ENGINEERING DRAWING IS THE PROPRIETARY PROPERTY OF COMPAL ELECTRONICS, INC. AND CONTAINS CONFIDENTIAL AND TRADE SECRET INFORMATION. THIS SHEET MAY NOT BE TRANSFERED FROM THE CUSTODY OF THE COMPETENT DIVISION OF R&D DEPARTMENT EXCEPT AS AUTHORIZED BY COMPAL ELECTRONICS, INC. NEITHER THIS SHEET NOR THE INFORMATION IT CONTAINS MAY BE USED BY OR DISCLOSED TO ANY THIRD PARTY WITHOUT PRIOR WRITTEN CONSENT OF COMPAL ELECTRONICS, INC.

| Title | PWR BTN/Can. Sensor/TP/LEDs | |
|---|---|---|
| Size | Document Number: PWWAA LA6842P M/B | Rev 0.2 |
| Date: Wednesday, July 28, 2010 | Sheet 33 of 45 | |

## +3VALW TO +3VS

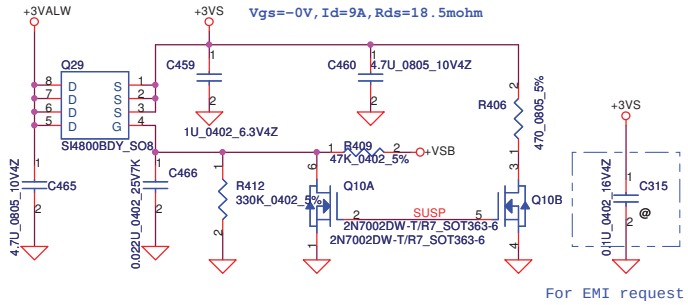


## +5VALW TO +5VS

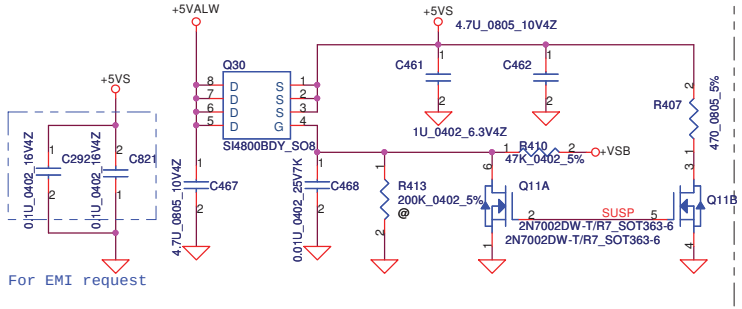


## +1.5V to +1.5VS

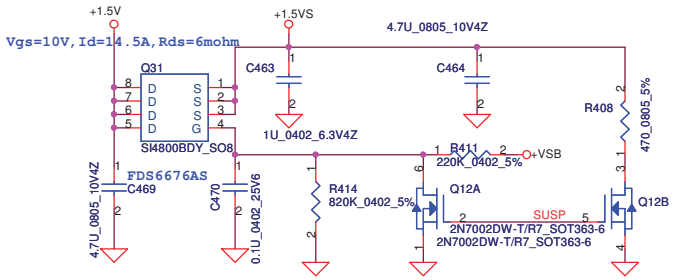


0715 --> Q31 change to SB548000310 the same as +5VS

## +3VALW TO +3V_LAN

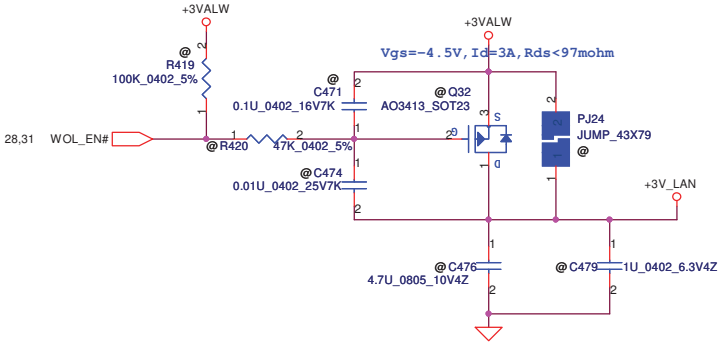


## For S3 CPU Power Saving

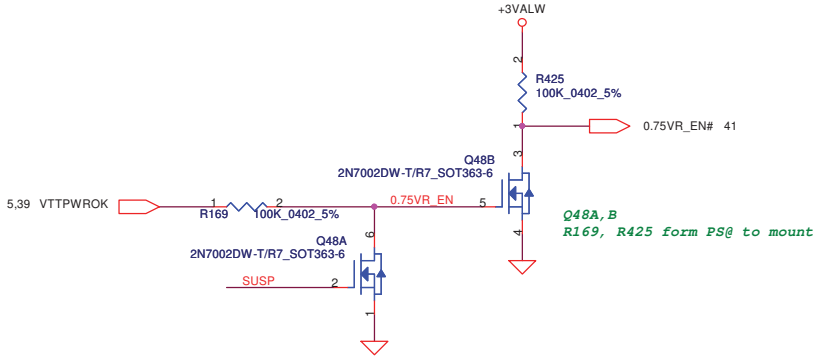


Q48A,B
R169, R425 form PS@ to mount

## Reserve for EMI test

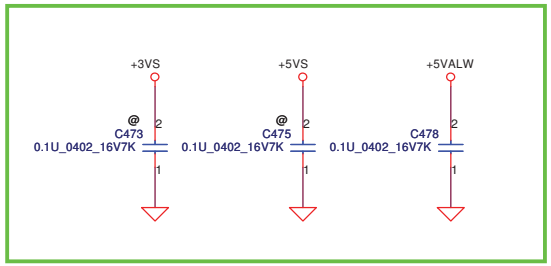


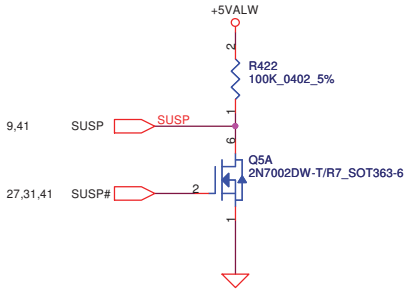


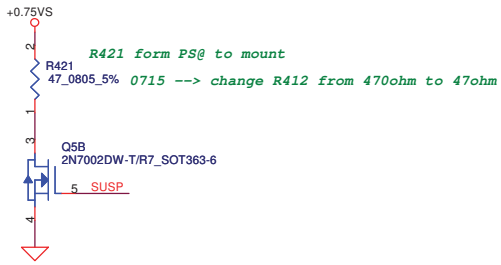


R421 form PS@ to mount
0715 --> change R412 from 470ohm to 47ohm

| Security Classification | Compal Secret Data | | |
|---|---|---|---|
| Issued Date | 2010/06/21 | Deciphered Date | 2011/06/21 |

THIS SHEET OF ENGINEERING DRAWING IS THE PROPRIETARY PROPERTY OF COMPAL ELECTRONICS, INC. AND CONTAINS CONFIDENTIAL AND TRADE SECRET INFORMATION. THIS SHEET MAY NOT BE TRANSFERED FROM THE CUSTODY OF THE COMPETENT DIVISION OF R&D DEPARTMENT EXCEPT AS AUTHORIZED BY COMPAL ELECTRONICS, INC. NEITHER THIS SHEET NOR THE INFORMATION IT CONTAINS MAY BE USED BY OR DISCLOSED TO ANY THIRD PARTY WITHOUT PRIOR WRITTEN CONSENT OF COMPAL ELECTRONICS, INC.

Compal Electronics, Inc.

Title: DC-DC INTERFACE

Size | Document Number: PWWAA LA6842P M/B | Rev: 0.2

Date: Wednesday, July 28, 2010 | Sheet 34 of 45

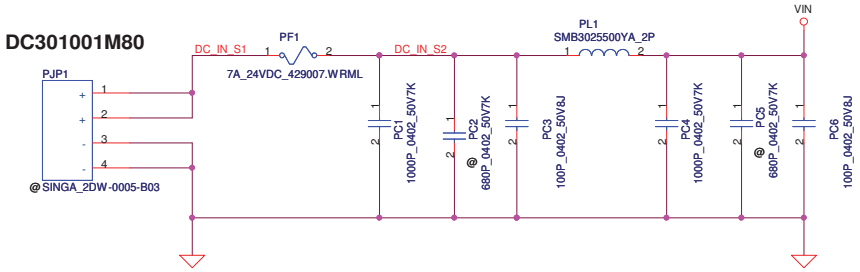


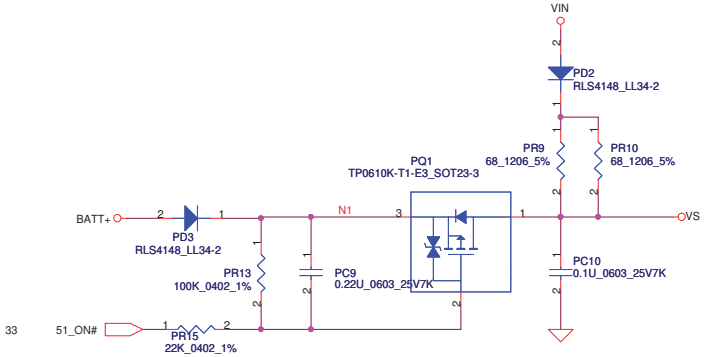


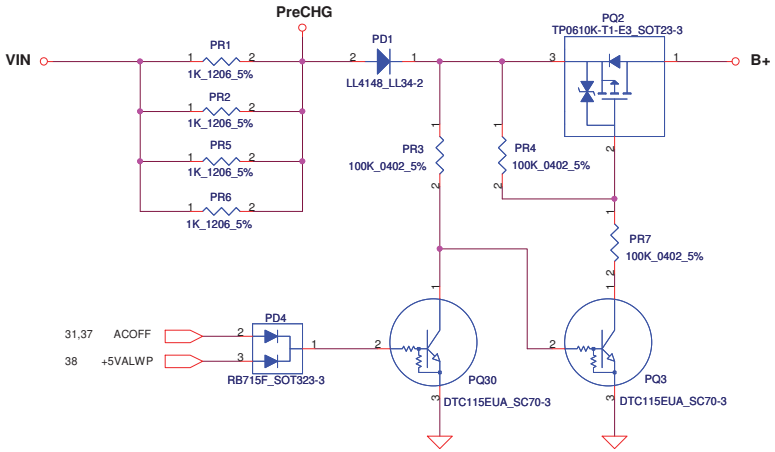


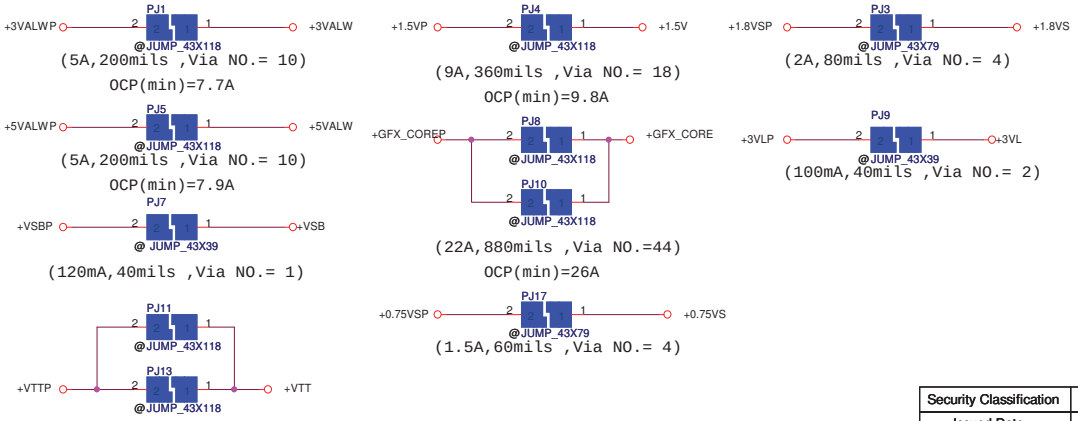


| Security Classification | Compal Secret Data | | |
|---|---|---|---|
| Issued Date | 2009/01/23 | Deciphered Date | 2010/01/23 |

THIS SHEET OF ENGINEERING DRAWING IS THE PROPRIETARY PROPERTY OF COMPAL ELECTRONICS, INC. AND CONTAINS CONFIDENTIAL AND TRADE SECRET INFORMATION. THIS SHEET MAY NOT BE TRANSFERED FROM THE CUSTODY OF THE COMPETENT DIVISION OF R&D DEPARTMENT EXCEPT AS AUTHORIZED BY COMPAL ELECTRONICS, INC. NEITHER THIS SHEET NOR THE INFORMATION IT CONTAINS MAY BE USED BY OR DISCLOSED TO ANY THIRD PARTY WITHOUT PRIOR WRITTEN CONSENT OF COMPAL ELECTRONICS, INC.

**Compal Electronics, Inc.**

Title: DCIN / DETECTOR

Size | Document Number: PWWAA LA6842P M/B | Rev 0.2

Date: Wednesday, July 28, 2010 | Sheet 35 of 45

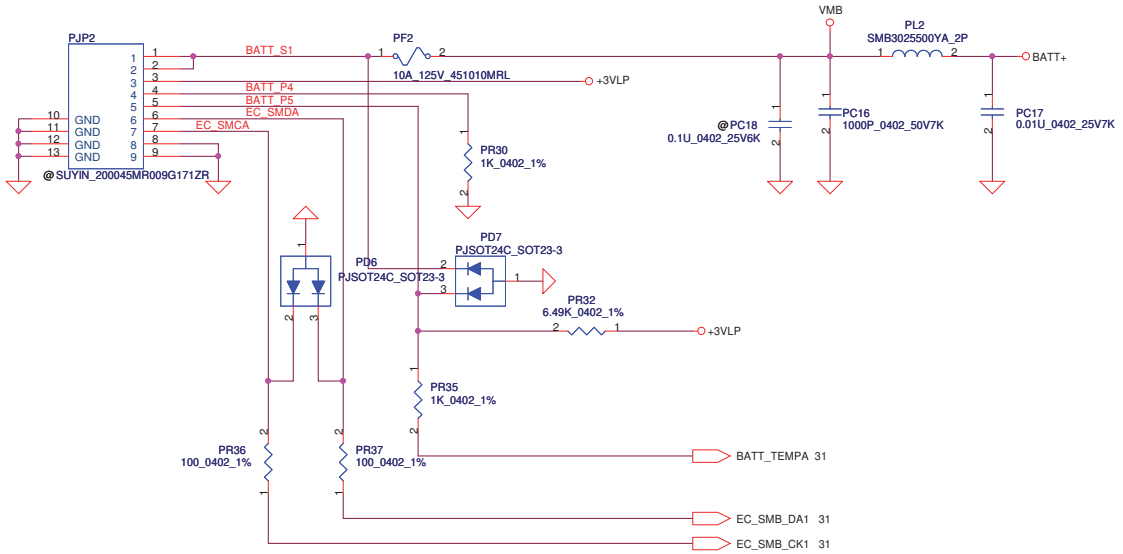


**PH1 under CPU botten side :**
CPU thermal protection at 95degree C
Recovery at 56 degree C

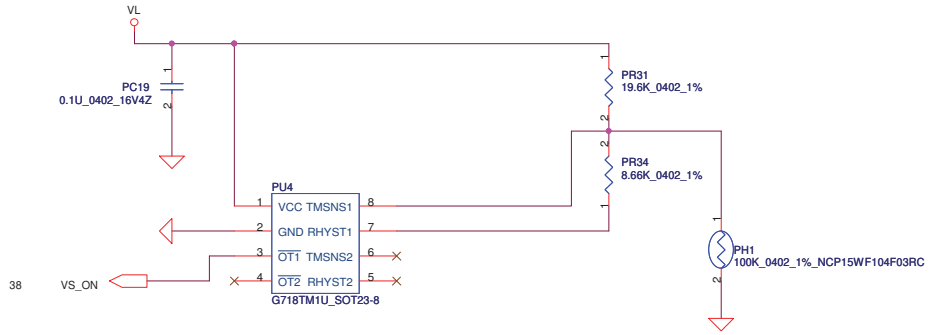


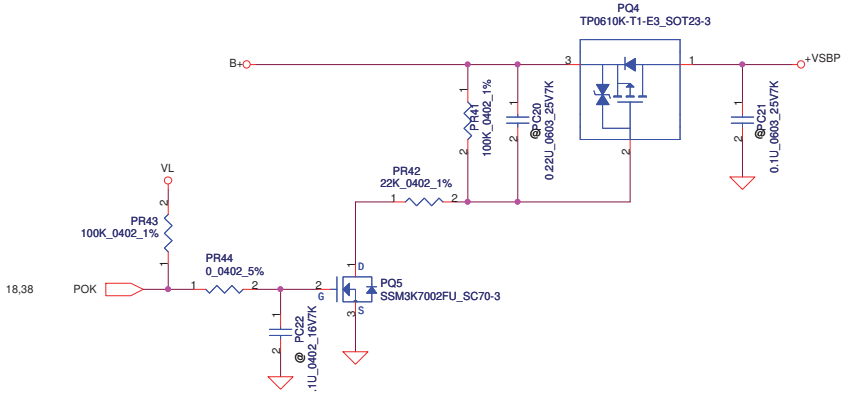


| Security Classification | Compal Secret Data | | |
|---|---|---|---|
| Issued Date | 2009/01/23 | Deciphered Date | 2010/01/23 |

THIS SHEET OF ENGINEERING DRAWING IS THE PROPRIETARY PROPERTY OF COMPAL ELECTRONICS, INC. AND CONTAINS CONFIDENTIAL AND TRADE SECRET INFORMATION. THIS SHEET MAY NOT BE TRANSFERED FROM THE CUSTODY OF THE COMPETENT DIVISION OF R&D DEPARTMENT EXCEPT AS AUTHORIZED BY COMPAL ELECTRONICS, INC. NEITHER THIS SHEET NOR THE INFORMATION IT CONTAINS MAY BE USED BY OR DISCLOSED TO ANY THIRD PARTY WITHOUT PRIOR WRITTEN CONSENT OF COMPAL ELECTRONICS, INC.

**Compal Electronics, Inc.**

Title: BATTERY CONN / OTP

Size | Document Number: PWWAA LA6842P M/B | Rev: 0.2

Date: Wednesday, July 28, 2010 | Sheet 36 of 45

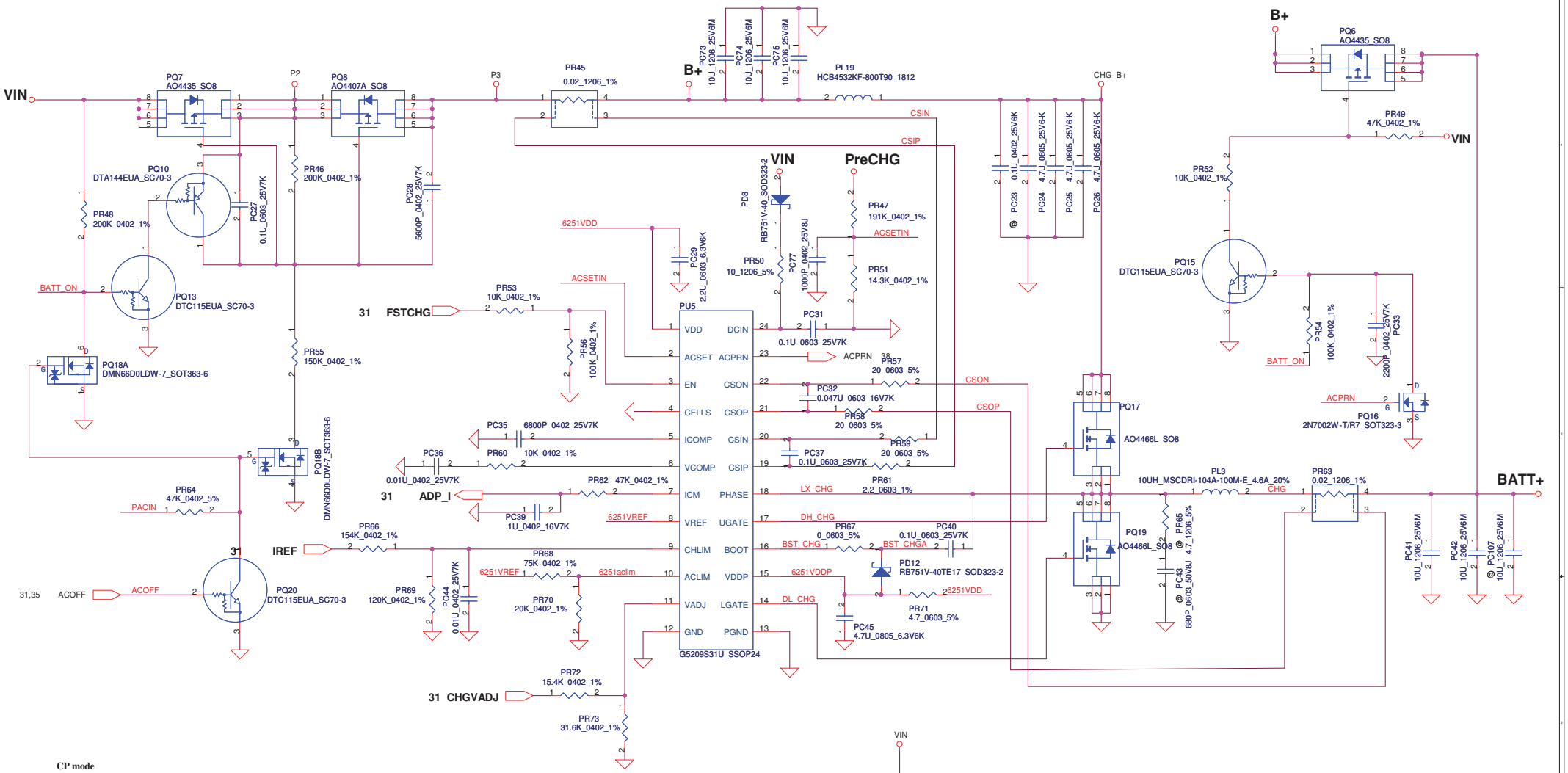


CP mode

Iada=0~3.42A(65W) CP= 92%*Iada; CP=3.147A

Vaclim=1.08V(65W) PR68=75k PR45=0.02

CC=0.25A~3A
IREF=1.016*Icharge
IREF=0.254V~3.048V
VCHLIM need over 95mV

| CHGVADJ=(Vcell-4)/0.10627 | |
|---|---|
| Vcell | CHGVADJ |
| 4V | 0V |
| 4.2V | 1.882V |
| 4.35V | 3.2935V |

**Vin Detector**

High 18.089V
Low 17.44V

| Security Classification | Compal Secret Data | | |
|---|---|---|---|
| Issued Date | 2009/01/23 | Deciphered Date | 2010/01/23 |

THIS SHEET OF ENGINEERING DRAWING IS THE PROPRIETARY PROPERTY OF COMPAL ELECTRONICS, INC. AND CONTAINS CONFIDENTIAL AND TRADE SECRET INFORMATION. THIS SHEET MAY NOT BE TRANSFERED FROM THE CUSTODY OF THE COMPETENT DIVISION OF R&D DEPARTMENT EXCEPT AS AUTHORIZED BY COMPAL ELECTRONICS, INC. NEITHER THIS SHEET NOR THE INFORMATION IT CONTAINS MAY BE USED BY OR DISCLOSED TO ANY THIRD PARTY WITHOUT PRIOR WRITTEN CONSENT OF COMPAL ELECTRONICS, INC.

**Compal Electronics, Inc.**

Title: CHARGER

Size | Document Number: PWWAA LA6842P M/B | Rev: 0.2

Date: Wednesday, July 28, 2010 | Sheet 37 of 45

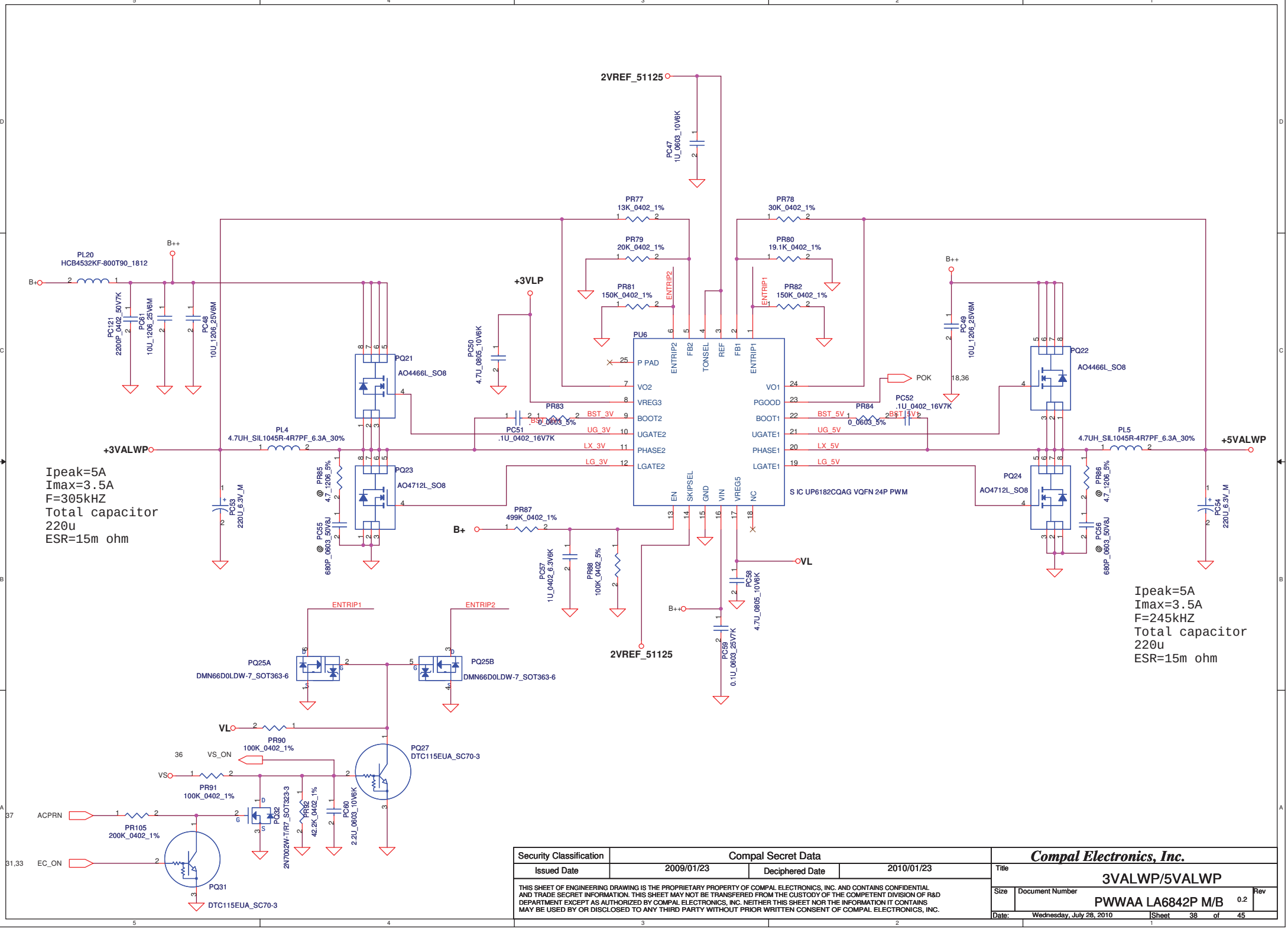


| Security Classification | Compal Secret Data | | |
|---|---|---|---|
| Issued Date | 2009/01/23 | Deciphered Date | 2010/01/23 |

THIS SHEET OF ENGINEERING DRAWING IS THE PROPRIETARY PROPERTY OF COMPAL ELECTRONICS, INC. AND CONTAINS CONFIDENTIAL AND TRADE SECRET INFORMATION. THIS SHEET MAY NOT BE TRANSFERED FROM THE CUSTODY OF THE COMPETENT DIVISION OF R&D DEPARTMENT EXCEPT AS AUTHORIZED BY COMPAL ELECTRONICS, INC. NEITHER THIS SHEET NOR THE INFORMATION IT CONTAINS MAY BE USED BY OR DISCLOSED TO ANY THIRD PARTY WITHOUT PRIOR WRITTEN CONSENT OF COMPAL ELECTRONICS, INC.

**Compal Electronics, Inc.**

Title: 3VALWP/5VALWP

Size | Document Number: PWWAA LA6842P M/B | Rev: 0.2

Date: Wednesday, July 28, 2010 | Sheet 38 of 45

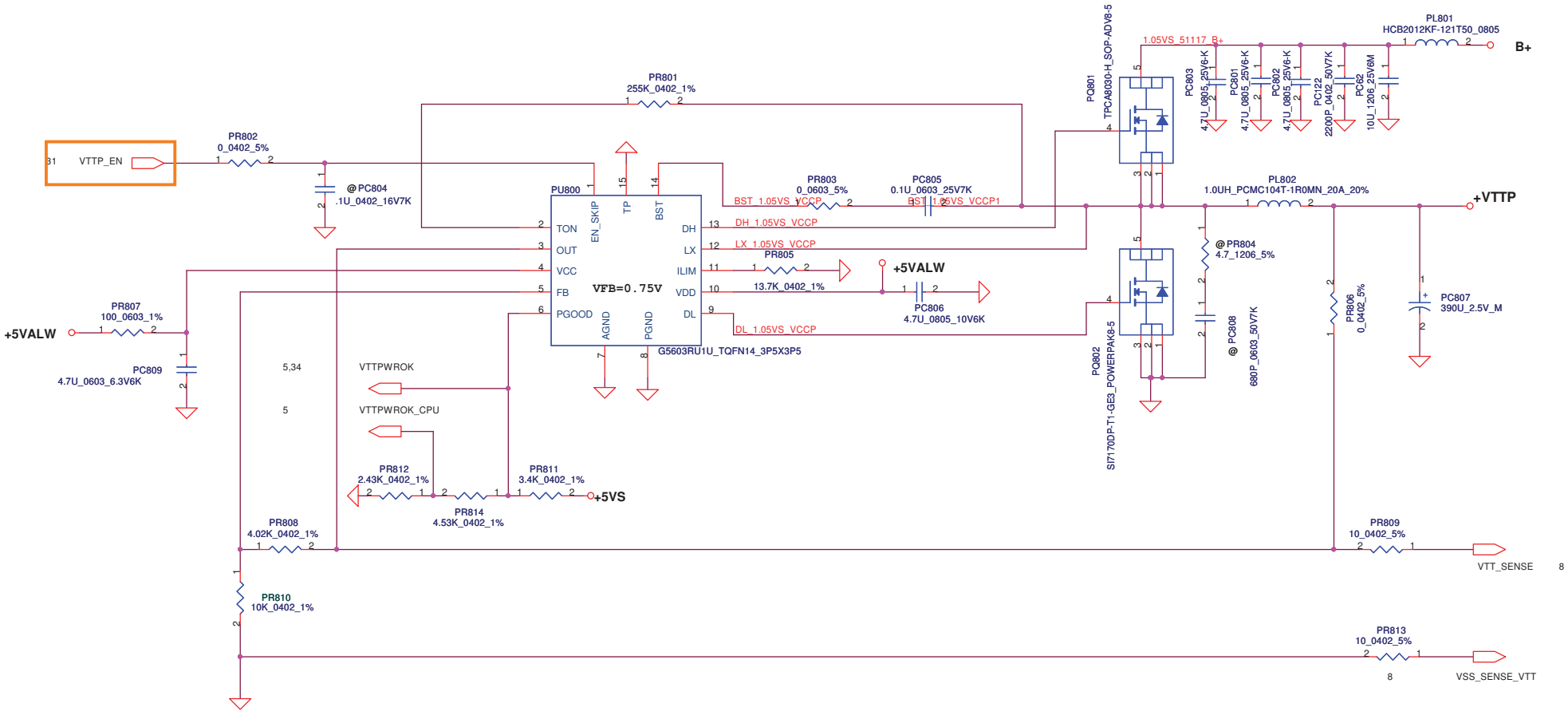


| Security Classification | Compal Secret Data | | |
|---|---|---|---|
| Issued Date | 2009/01/23 | Deciphered Date | 2010/01/23 |

THIS SHEET OF ENGINEERING DRAWING IS THE PROPRIETARY PROPERTY OF COMPAL ELECTRONICS, INC. AND CONTAINS CONFIDENTIAL AND TRADE SECRET INFORMATION. THIS SHEET MAY NOT BE TRANSFERED FROM THE CUSTODY OF THE COMPETENT DIVISION OF R&D DEPARTMENT EXCEPT AS AUTHORIZED BY COMPAL ELECTRONICS, INC. NEITHER THIS SHEET NOR THE INFORMATION IT CONTAINS MAY BE USED BY OR DISCLOSED TO ANY THIRD PARTY WITHOUT PRIOR WRITTEN CONSENT OF COMPAL ELECTRONICS, INC.

**Compal Electronics, Inc.**

Title: +VTTP

Size | Document Number: PWWAA LA6842P M/B | Rev: 0.2

Date: Wednesday, July 28, 2010 | Sheet 39 of 45

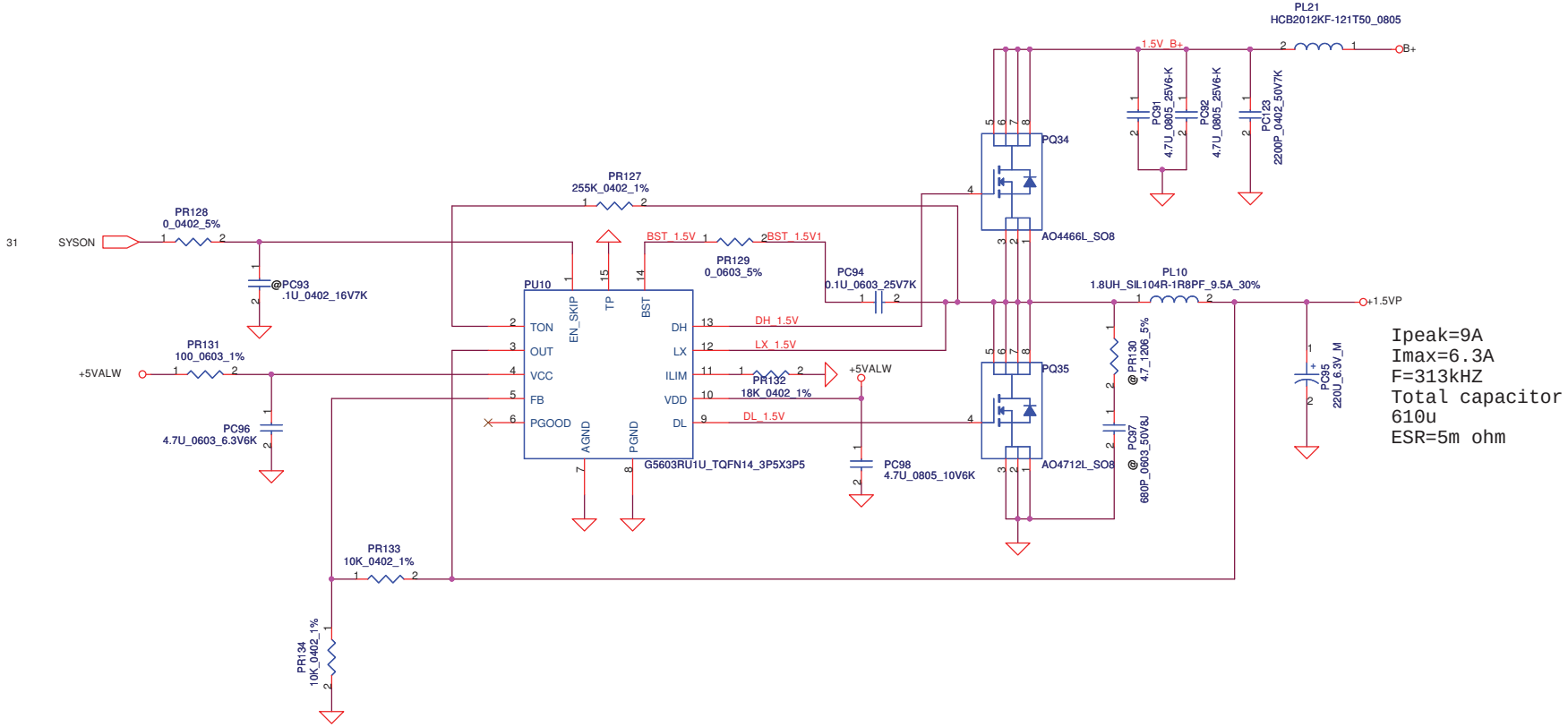


Ipeak=9A
Imax=6.3A
F=313kHZ
Total capacitor
610u
ESR=5m ohm

| Security Classification | Compal Secret Data | | |
|---|---|---|---|
| Issued Date | 2009/01/23 | Deciphered Date | 2010/01/23 |

THIS SHEET OF ENGINEERING DRAWING IS THE PROPRIETARY PROPERTY OF COMPAL ELECTRONICS, INC. AND CONTAINS CONFIDENTIAL AND TRADE SECRET INFORMATION. THIS SHEET MAY NOT BE TRANSFERED FROM THE CUSTODY OF THE COMPETENT DIVISION OF R&D DEPARTMENT EXCEPT AS AUTHORIZED BY COMPAL ELECTRONICS, INC. NEITHER THIS SHEET NOR THE INFORMATION IT CONTAINS MAY BE USED BY OR DISCLOSED TO ANY THIRD PARTY WITHOUT PRIOR WRITTEN CONSENT OF COMPAL ELECTRONICS, INC.

**Compal Electronics, Inc.**

Title: **+1.5VP**

Size: Custom | Document Number: PWWAA LA6842P M/B | Rev: 0.2

Date: Wednesday, July 28, 2010 | Sheet 40 of 45

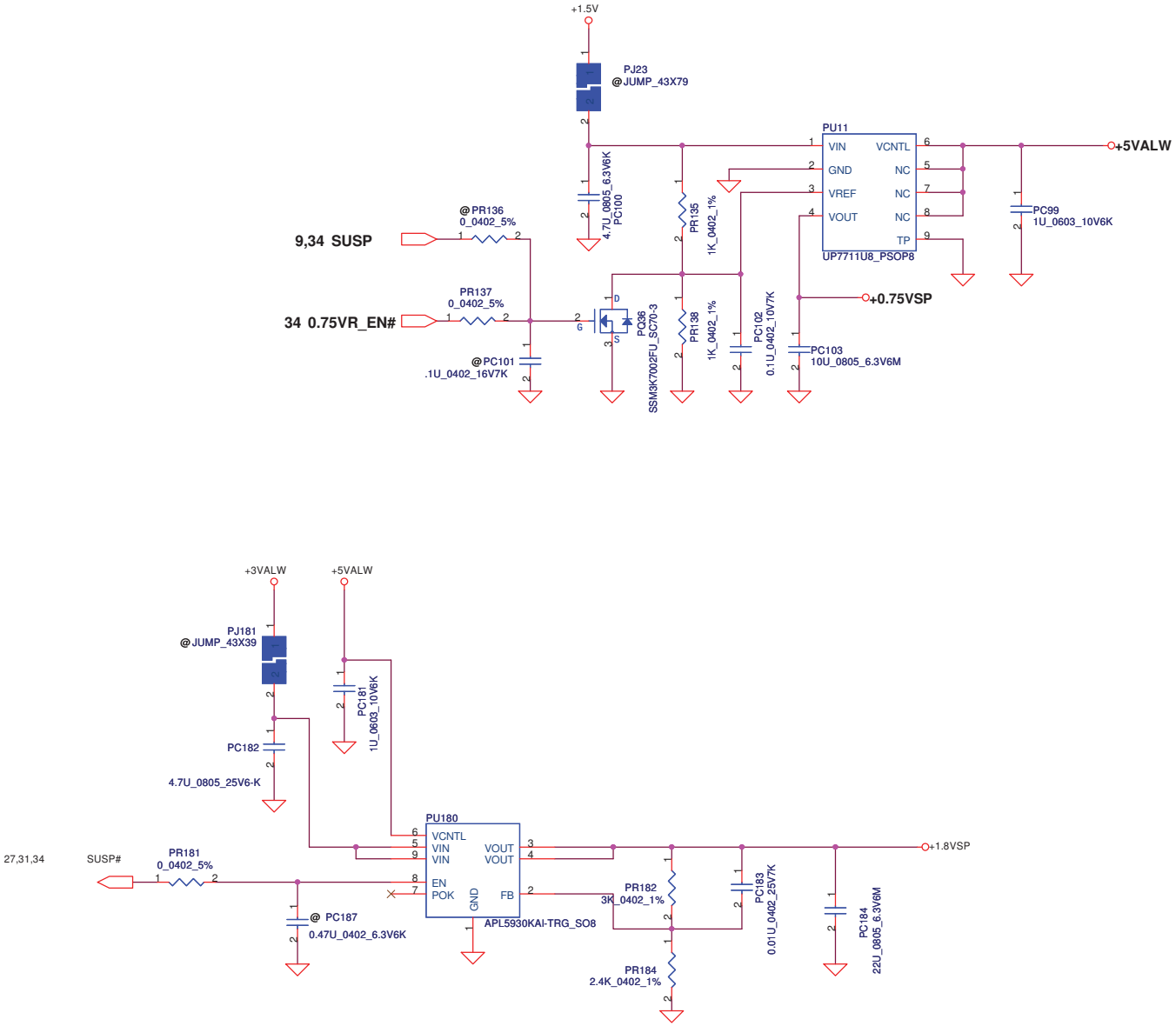


| Security Classification | Compal Secret Data | | |
|---|---|---|---|
| Issued Date | 2009/01/23 | Deciphered Date | 2010/01/23 |

THIS SHEET OF ENGINEERING DRAWING IS THE PROPRIETARY PROPERTY OF COMPAL ELECTRONICS, INC. AND CONTAINS CONFIDENTIAL AND TRADE SECRET INFORMATION. THIS SHEET MAY NOT BE TRANSFERED FROM THE CUSTODY OF THE COMPETENT DIVISION OF R&D DEPARTMENT EXCEPT AS AUTHORIZED BY COMPAL ELECTRONICS, INC. NEITHER THIS SHEET NOR THE INFORMATION IT CONTAINS MAY BE USED BY OR DISCLOSED TO ANY THIRD PARTY WITHOUT PRIOR WRITTEN CONSENT OF COMPAL ELECTRONICS, INC.

**Compal Electronics, Inc.**

Title: 0.75VSP/+1.8VSP

Size | Document Number: PWWAA LA6842P M/B | Rev: 0.2

Date: Wednesday, July 28, 2010 | Sheet 41 of 45

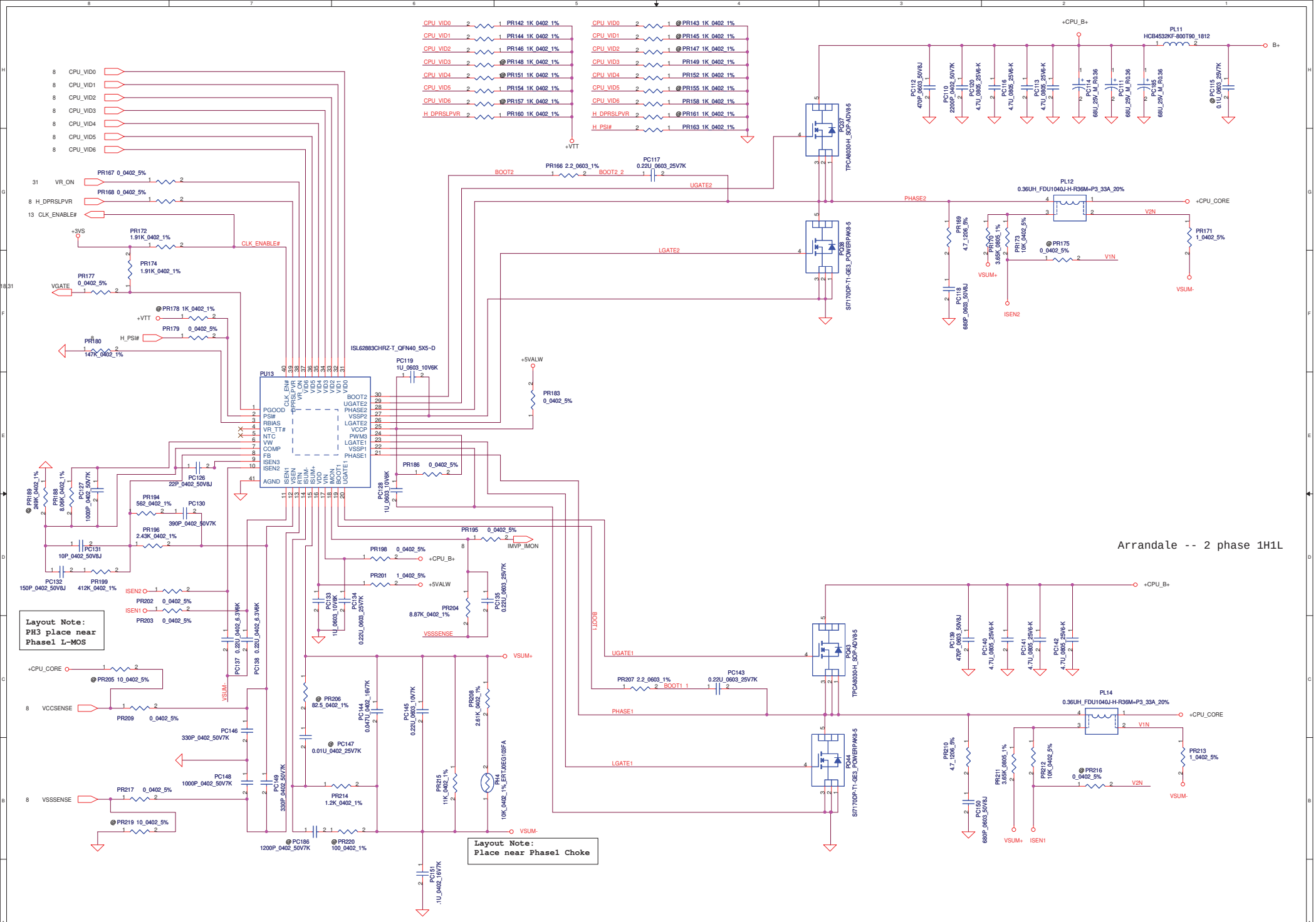


| Security Classification | Compal Secret Data | | |
|---|---|---|---|
| Issued Date | 2009/01/23 | Deciphered Date | 2010/01/23 |

THIS SHEET OF ENGINEERING DRAWING IS THE PROPRIETARY PROPERTY OF COMPAL ELECTRONICS, INC. AND CONTAINS CONFIDENTIAL AND TRADE SECRET INFORMATION. THIS SHEET MAY NOT BE TRANSFERED FROM THE CUSTODY OF THE COMPETENT DIVISION OF R&D DEPARTMENT EXCEPT AS AUTHORIZED BY COMPAL ELECTRONICS, INC. NEITHER THIS SHEET NOR THE INFORMATION IT CONTAINS MAY BE USED BY OR DISCLOSED TO ANY THIRD PARTY WITHOUT PRIOR WRITTEN CONSENT OF COMPAL ELECTRONICS, INC.

**Compal Electronics, Inc.**

Title: +CPU_CORE

Size: C | Document Number: PWWAA LA6842P M/B | Rev: 0.2

Date: Wednesday, July 28, 2010 | Sheet 42 of 45

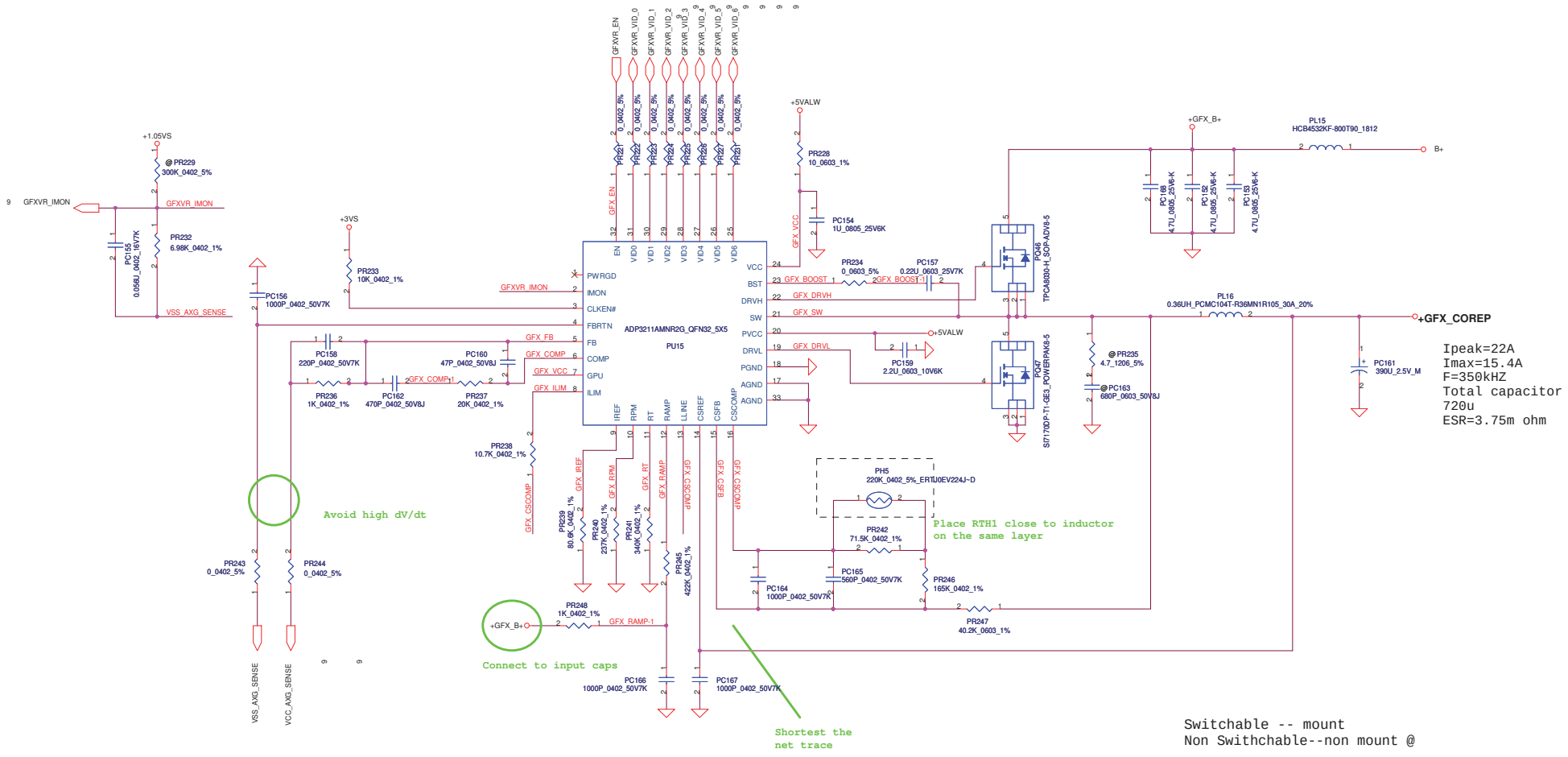


| Security Classification | Compal Secret Data | | | Compal Electronics, Inc. |
|---|---|---|---|---|
| Issued Date | 2009/10/02 | Deciphered Date | 2010/10/02 | Title: +GFX_COREP |
| | | | | Size / Document Number: PWWAA LA6842P M/B — Rev 0.2 |
| | | | | Date: Wednesday, July 28, 2010 — Sheet 43 of 45 |

THIS SHEET OF ENGINEERING DRAWING IS THE PROPRIETARY PROPERTY OF COMPAL ELECTRONICS, INC. AND CONTAINS CONFIDENTIAL AND TRADE SECRET INFORMATION. THIS SHEET MAY NOT BE TRANSFERED FROM THE CUSTODY OF THE COMPETENT DIVISION OF R&D DEPARTMENT EXCEPT AS AUTHORIZED BY COMPAL ELECTRONICS, INC. NEITHER THIS SHEET NOR THE INFORMATION IT CONTAINS MAY BE USED BY OR DISCLOSED TO ANY THIRD PARTY WITHOUT PRIOR WRITTEN CONSENT OF COMPAL ELECTRONICS, INC.

| NO DATE | PAGE | MODIFICATION LIST | PURPOSE |
|---|---|---|---|
| 2010/07/13 | 42 | Change PL12,PL14 to SH00000IN00 | BOM modify |
| 2010/07/13 | 43 | Change PL16 to SH00000IN00 | BOM modify |
| 2010/07/23 | 36 | Change PC19 to SE070104Z80 | BOM modify |
| 2010/07/26 | 36 | Add PD6,PD7 | EMI request |
| 2010/07/26 | 37 | Add PC73,PC74,PC75(10U_1206) | EMI request |
| 2010/07/26 | 38 | Add PC121(2200P_0402),PC61(10U_1206) | EMI request |
| 2010/07/26 | 39 | Add PC122(2200P_0402),PC62(10U_1206) | EMI request |
| 2010/07/26 | 40 | Add PC123(2200P_0402) | EMI request |


| Security Classification | Compal Secret Data | | |
|---|---|---|---|
| Issued Date | 2009/01/23 | Deciphered Date | 2010/01/23 |

THIS SHEET OF ENGINEERING DRAWING IS THE PROPRIETARY PROPERTY OF COMPAL ELECTRONICS, INC. AND CONTAINS CONFIDENTIAL AND TRADE SECRET INFORMATION. THIS SHEET MAY NOT BE TRANSFERED FROM THE CUSTODY OF THE COMPETENT DIVISION OF R&D DEPARTMENT EXCEPT AS AUTHORIZED BY COMPAL ELECTRONICS, INC. NEITHER THIS SHEET NOR THE INFORMATION IT CONTAINS MAY BE USED BY OR DISCLOSED TO ANY THIRD PARTY WITHOUT PRIOR WRITTEN CONSENT OF COMPAL ELECTRONICS, INC.


**Compal Electronics, Inc.**

Title: **Power PIR**

Size | Document Number: **PWWAA LA6842P M/B** | Rev 0.2

Date: Wednesday, July 28, 2010 | Sheet 44 of 45

# PIR (Product Improve Record)

PWWAA LA-6842P SCHEMATIC CHANGE LIST
REVISION CHANGE: 0.1 TO 0.2
GERBER-OUT DATE: 2010/07/31

| NO | DATE | PAGE | MODIFICATION LIST | PURPOSE |
|---|---|---|---|---|
| 1. 20100714 / Page13 --> add 10u Cap to +1.5VS_CK505 | | | | For eSATA transmit issue ---> not add 10u Cap into schematic yet |

NWQAA LA-6061P SCHEMATIC CHANGE LIST
REVISION CHANGE: 1.0 TO 2.0
GERBER-OUT DATE: 2010/03/19

| NO | DATE | PAGE | MODIFICATION LIST | PURPOSE |
|---|---|---|---|---|
| 1 | 3/17 | 29 | Change cardreader to JMB385/389 | For customer request |
| 2 | 3/18 | 31 | Remove D86 | For ESD request |
| 3 | 3/18 | 22 | Add R52 | For CRT wave issue |
| 4 | 3/19 | 22 | Change L12 to 2.2 ohm | For CRT wave issue |
| 5 | 3/22 | 15 | Add D54 | For HDMI CEC issue |
| 6 | 3/24 | 13 | Change C213 to 1U | For NALAA ESATA performance low issue |


| Security Classification | Compal Secret Data | | |
|---|---|---|---|
| Issued Date | 2010/06/21 | Deciphered Date | 2011/06/21 |

THIS SHEET OF ENGINEERING DRAWING IS THE PROPRIETARY PROPERTY OF COMPAL ELECTRONICS, INC. AND CONTAINS CONFIDENTIAL AND TRADE SECRET INFORMATION. THIS SHEET MAY NOT BE TRANSFERED FROM THE CUSTODY OF THE COMPETENT DIVISION OF R&D DEPARTMENT EXCEPT AS AUTHORIZED BY COMPAL ELECTRONICS, INC. NEITHER THIS SHEET NOR THE INFORMATION IT CONTAINS MAY BE USED BY OR DISCLOSED TO ANY THIRD PARTY WITHOUT PRIOR WRITTEN CONSENT OF COMPAL ELECTRONICS, INC.


Compal Electronics, Inc.

Title: HW-PIR

Size: Custom | Document Number: PWWAA LA6842P M/B | Rev: 0.2

Date: Wednesday, July 28, 2010 | Sheet 45 of 45