Sakhir 10, 10C, 10G

LA-2491 Schematics Document

Intel Dothan / Alviso GM(PM) / DDR-1 / ICH6-M / Fix Bay

(nVIDIA NV43M / NV44M / ATi M22 / M24)

2004 / 11 /28

Rev:1.0

THIS SHEET OF ENGINEERING DRAWING IS THE PROPRIETARY PROPERTY OF COMPAL ELECTRONICS, INC. AND CONTAINS CONFIDENTIAL AND TRADE SECRET INFORMATION. THIS SHEET MAY NOT BE TRANSFERED FROM THE CUSTODY OF THE COMPETENT DIVISION OF R&D DEPARTMENT EXCEPT AS AUTHORIZED BY COMPAL ELECTRONICS, INC. NEITHER THIS SHEET NOR THE INFORMATION IT CONTAINS MAY BE USED BY OR DISCLOSED TO ANY THIRD PARTY WITHOUT PRIOR WRITTEN CONSENT OF COMPAL ELECTRONICS, INC.

Compal Electronics, Inc.		
Title: Cover Sheet		
Size: A3	Document Number: Sakhir LA-2491	Rev: 1.0
Date: 星期一, 十二月 06, 2004	Sheet 1 of 51	

Compal confidential

File Name : LA-2491

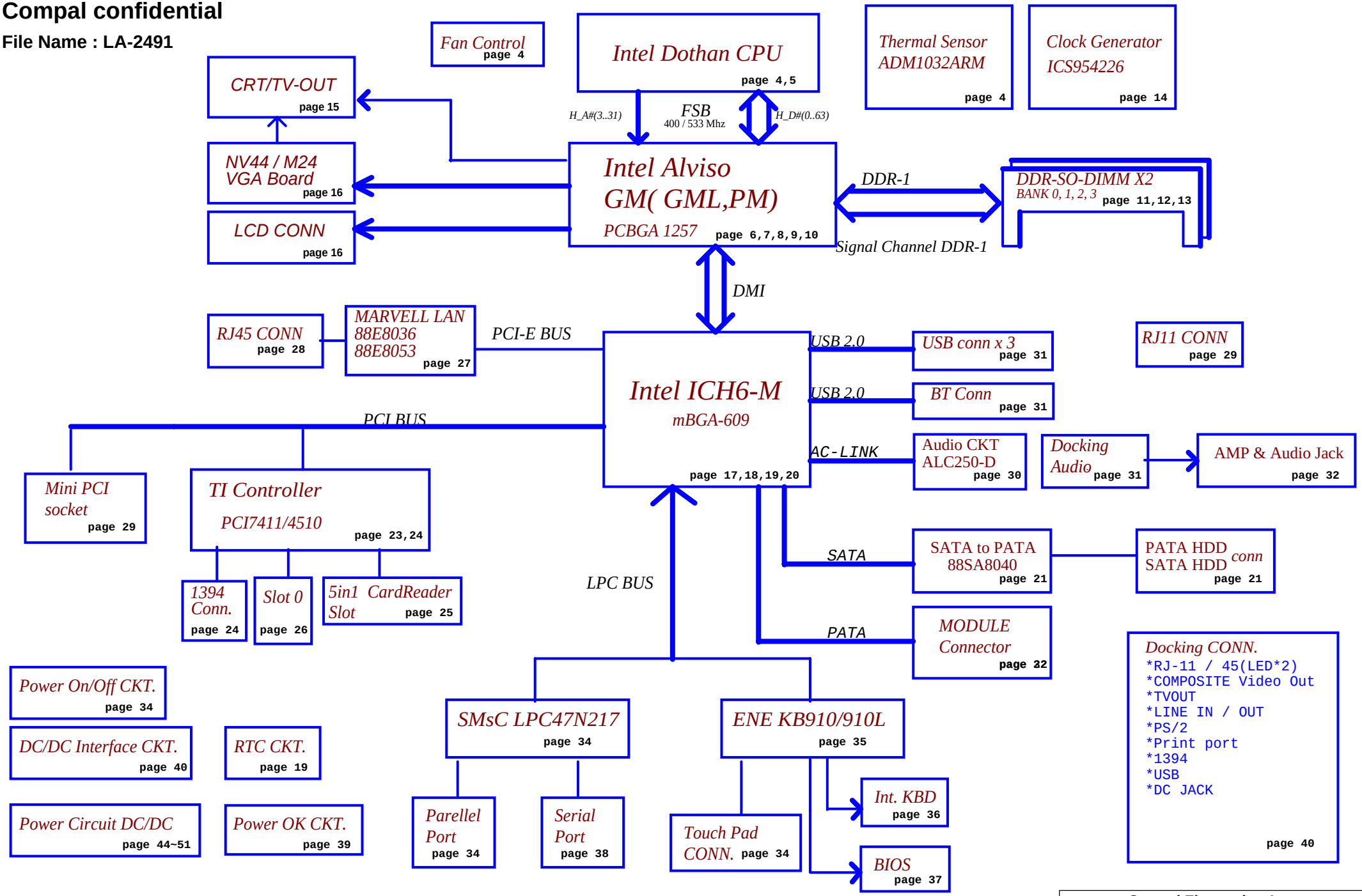

THIS SHEET OF ENGINEERING DRAWING IS THE PROPRIETARY PROPERTY OF COMPAL ELECTRONICS, INC. AND CONTAINS CONFIDENTIAL AND TRADE SECRET INFORMATION. THIS SHEET MAY NOT BE TRANSFERED FROM THE CUSTODY OF THE COMPETENT DIVISION OF R&D DEPARTMENT EXCEPT AS AUTHORIZED BY COMPAL ELECTRONICS, INC. NEITHER THIS SHEET NOR THE INFORMATION IT CONTAINS MAY BE USED BY OR DISCLOSED TO ANY THIRD PARTY WITHOUT PRIOR WRITTEN CONSENT OF COMPAL ELECTRONICS, INC.

Compal Electronics, Inc.		
Title: Block Diagrams		
Size	Document Number: Sakhir LA-2491	Rev 1.0
Date: 星期一, 十二月 06, 2004	Sheet 2 of 51	

Voltage Rails

Power Plane	Description	S1	S3	S5
VIN	Adapter power supply (19V)	N/A	N/A	N/A
B+	AC or battery power rail for power circuit.	N/A	N/A	N/A
+CPU_CORE	Core voltage for CPU	ON	OFF	OFF
+1.05VS	1.05V switched power rail	ON	OFF	OFF
+DDRVTT	1.25V switched power rail for DDR terminator	ON	OFF	OFF
+1.5VALW	1.5V always on power rail	ON	ON	ON*
+1.5VS	1.5V switched power rail	ON	OFF	OFF
+1.8VS	1.8V switched power rail	ON	OFF	OFF
+DDRVCC	2.5V power rail for DDR	ON	ON	OFF
+2.5VS	2.5V switched power rail	ON	OFF	OFF
+3VALW	3.3V always on power rail	ON	ON	ON*
+3V	3.3V power rail	ON	ON	OFF
+3VS	3.3V switched power rail	ON	OFF	OFF
+5VALW	5V always on power rail	ON	ON	ON*
+5VS	5V switched power rail	ON	OFF	OFF
+5VCD	5V switched power rail for Direct CD	ON	OFF	OFF
+5VMOD	5V switched power rail for Module Bay	ON	OFF	OFF
+12VALW	12V always on power rail	ON	ON	ON*
+RTCVCC	RTC power	ON	ON	ON

Note : ON* means that this power plane is ON only with AC power available, otherwise it is OFF.

External PCI Devices

Device	IDSEL#	REQ#/GNT#	Interrupts
CardBus	AD20	2	PIRQA/PIRQB
1394	AD20	2	PIRQA/PIRQB
SD	AD20	2	PIRQA/PIRQB
Mini-PCI	AD18	1	PIRQG/PIRQH

EC SM Bus1 address

Device	Address
Smart Battery	0001 011X b
EEPROM(24C16/02)	1010 000X b
(24C04)	1011 000Xb

EC SM Bus2 address

Device	Address
ADM1032	1001 110X b
2'nd Battery	1001 011X b
Docking	1010 000X b

ICH6M SM Bus address

Device	Address
Clock Generator (ICS 952623)	1101 001Xb
DDR DIMM0	1001 000Xb
DDR DIMM2	1001 001Xb

STATE \ SIGNAL	SLP_S1#	SLP_S3#	SLP_S4#	SLP_S5#	+VALW	+V	+VS	Clock
Full ON	HIGH	HIGH	HIGH	HIGH	ON	ON	ON	ON
S1(Power On Suspend)	LOW	HIGH	HIGH	HIGH	ON	ON	ON	LOW
S3 (Suspend to RAM)	LOW	LOW	HIGH	HIGH	ON	ON	OFF	OFF
S4 (Suspend to Disk)	LOW	LOW	LOW	HIGH	ON	OFF	OFF	OFF
S5 (Soft OFF)	LOW	LOW	LOW	LOW	ON	OFF	OFF	OFF

Board ID / SKU ID Table for AD channel

Vcc	3.3V +/- 5%
Ra/Rc/Re	100K +/- 5%

Board ID	Rb / Rd / Rf	V_{AD_BID} min	V_{AD_BID} typ	V_{AD_BID} max
0	0	0 V	0 V	0 V
1	8.2K +/- 5%	0.216 V	0.250 V	0.289 V
2	18K +/- 5%	0.436 V	0.503 V	0.538 V
3	33K +/- 5%	0.712 V	0.819 V	0.875 V
4	56K +/- 5%	1.036 V	1.185 V	1.264 V
5	100K +/- 5%	1.453 V	1.650 V	1.759 V
6	200K +/- 5%	1.935 V	2.200 V	2.341 V
7	NC	2.500 V	3.300 V	3.300 V

BOARD ID Table

Board ID	PCB Revision
0	0.1
1	0.2
2	0.3
3	1.0
4	
5	
6	
7	

SKU ID Table

	SKU_ID_CHECK_1	7	6	5
SKU_ID_CHECK_0		1-Button	3-Buttons	7-Buttons
0	10	1		0
1	10C	3	12	2
2	10G	5		4
3	10GC	7	13	6
4	10J	11		10
5				
6				

THIS SHEET OF ENGINEERING DRAWING IS THE PROPRIETARY PROPERTY OF COMPAL ELECTRONICS, INC. AND CONTAINS CONFIDENTIAL AND TRADE SECRET INFORMATION. THIS SHEET MAY NOT BE TRANSFERED FROM THE CUSTODY OF THE COMPETENT DIVISION OF R&D DEPARTMENT EXCEPT AS AUTHORIZED BY COMPAL ELECTRONICS, INC. NEITHER THIS SHEET NOR THE INFORMATION IT CONTAINS MAY BE USED BY OR DISCLOSED TO ANY THIRD PARTY WITHOUT PRIOR WRITTEN CONSENT OF COMPAL ELECTRONICS, INC.

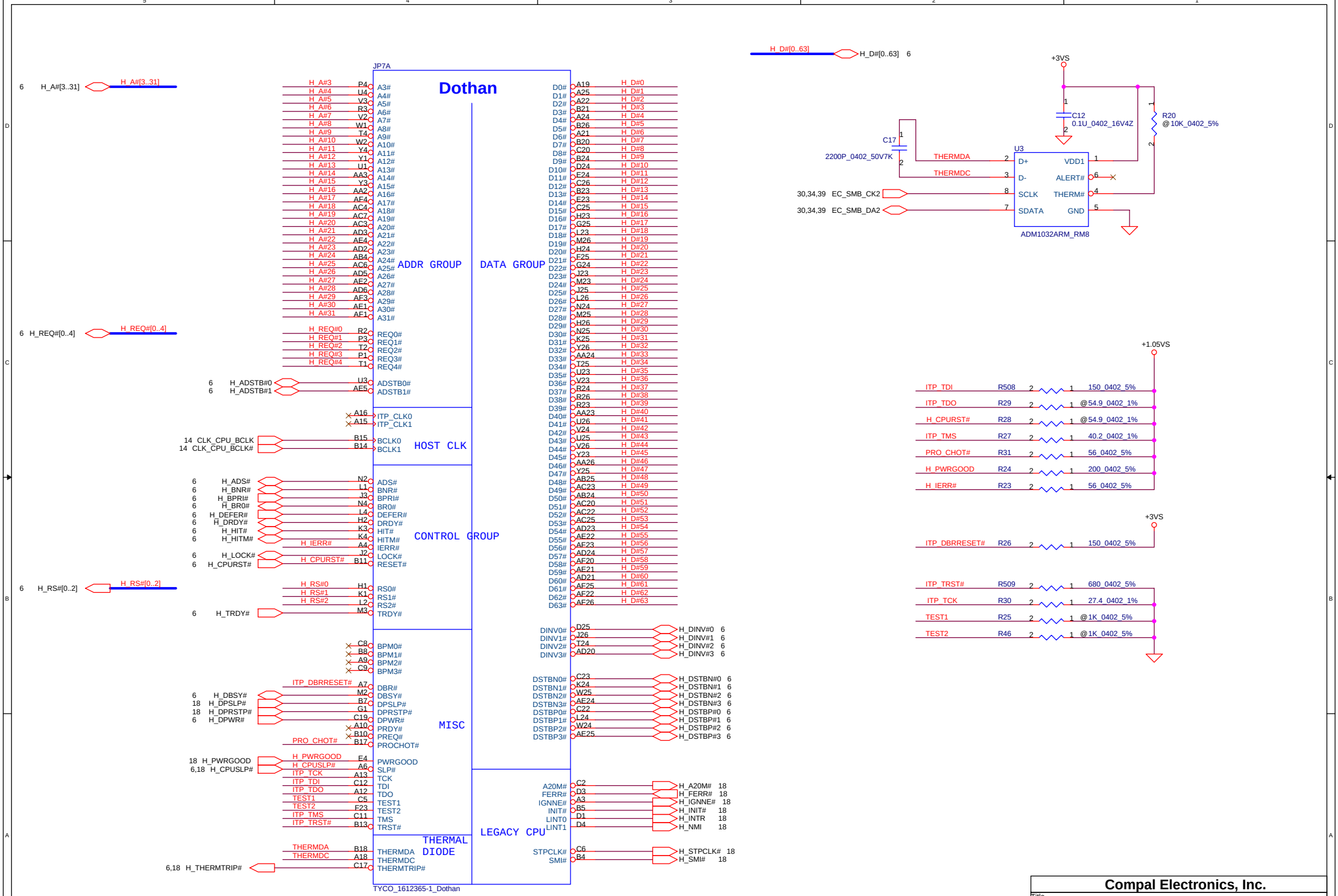

THERMDA & THERMDC Trace / Space = 10 / 10 mil

THIS SHEET OF ENGINEERING DRAWING IS THE PROPRIETARY PROPERTY OF COMPAL ELECTRONICS, INC. AND CONTAINS CONFIDENTIAL AND TRADE SECRET INFORMATION. THIS SHEET MAY NOT BE TRANSFERED FROM THE CUSTODY OF THE COMPETENT DIVISION OF R&D DEPARTMENT EXCEPT AS AUTHORIZED BY COMPAL ELECTRONICS, INC. NEITHER THIS SHEET NOR THE INFORMATION IT CONTAINS MAY BE USED BY OR DISCLOSED TO ANY THIRD PARTY WITHOUT PRIOR WRITTEN CONSENT OF COMPAL ELECTRONICS, INC.

Compal Electronics, Inc.

Title: Dothan Processor in mFCPGA479

Size: A | Document Number: Sakhir LA-2491 | Rev: 1.0

Date: 星期一, 十二月 06, 2004 | Sheet 4 of 51

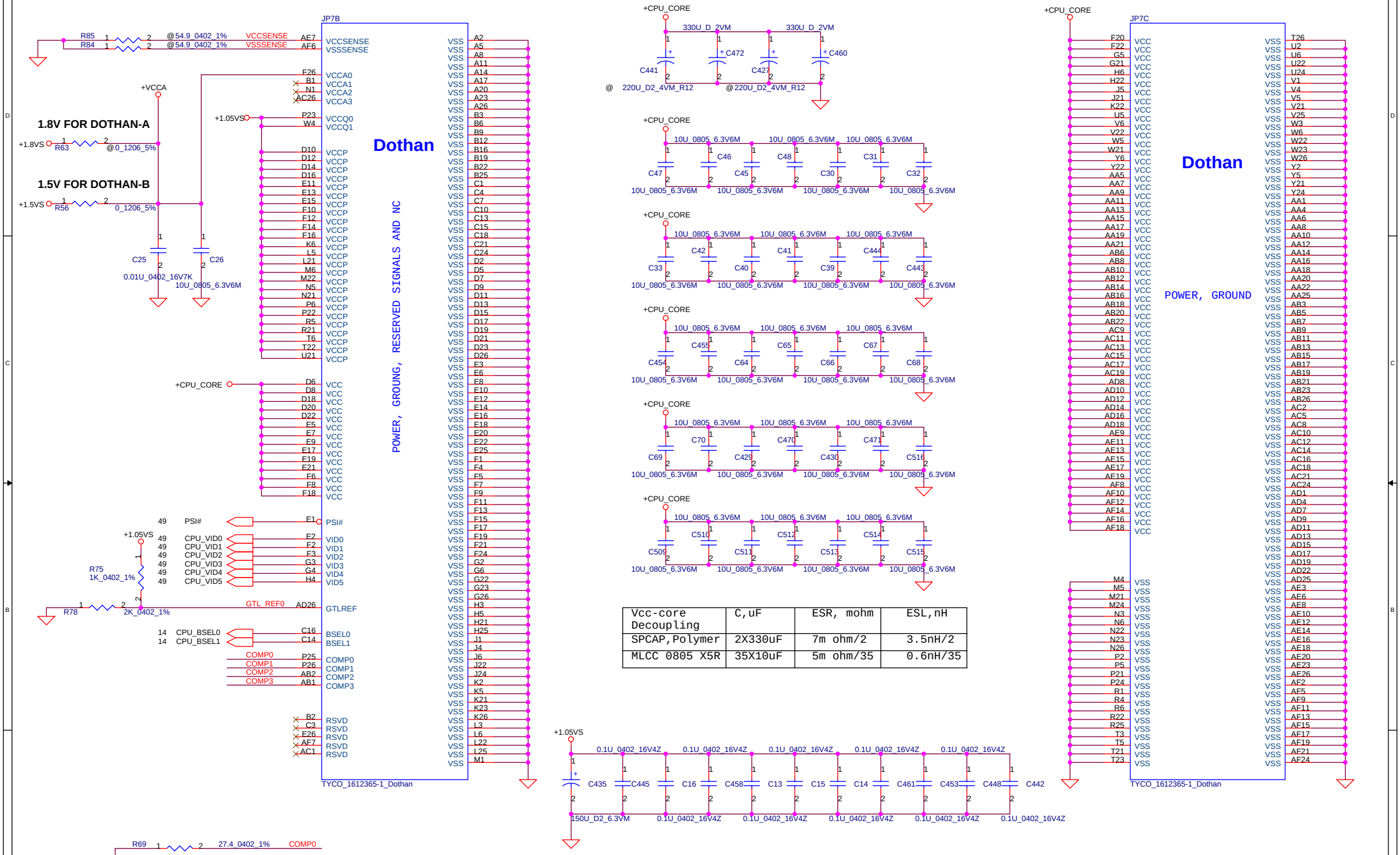

Vcc-core Decoupling	C,uF	ESR, mohm	ESL,nH
SPCAP,Polymer	2X330uF	7m ohm/2	3.5nH/2
MLCC 0805 X5R	35X10uF	5m ohm/35	0.6nH/35

THIS SHEET OF ENGINEERING DRAWING IS THE PROPRIETARY PROPERTY OF COMPAL ELECTRONICS, INC. AND CONTAINS CONFIDENTIAL AND TRADE SECRET INFORMATION. THIS SHEET MAY NOT BE TRANSFERED FROM THE CUSTODY OF THE COMPETENT DIVISION OF R&D DEPARTMENT EXCEPT AS AUTHORIZED BY COMPAL ELECTRONICS, INC. NEITHER THIS SHEET NOR THE INFORMATION IT CONTAINS MAY BE USED BY OR DISCLOSED TO ANY THIRD PARTY WITHOUT PRIOR WRITTEN CONSENT OF COMPAL ELECTRONICS, INC.

Compal Electronics, Inc.

Title: Dothan Processor in mFCPGA479

Size: A | Document Number: Sakhir LA-2491 | Rev: 1.0

Date: 星期一, 十二月 06, 2004 | Sheet 5 of 51

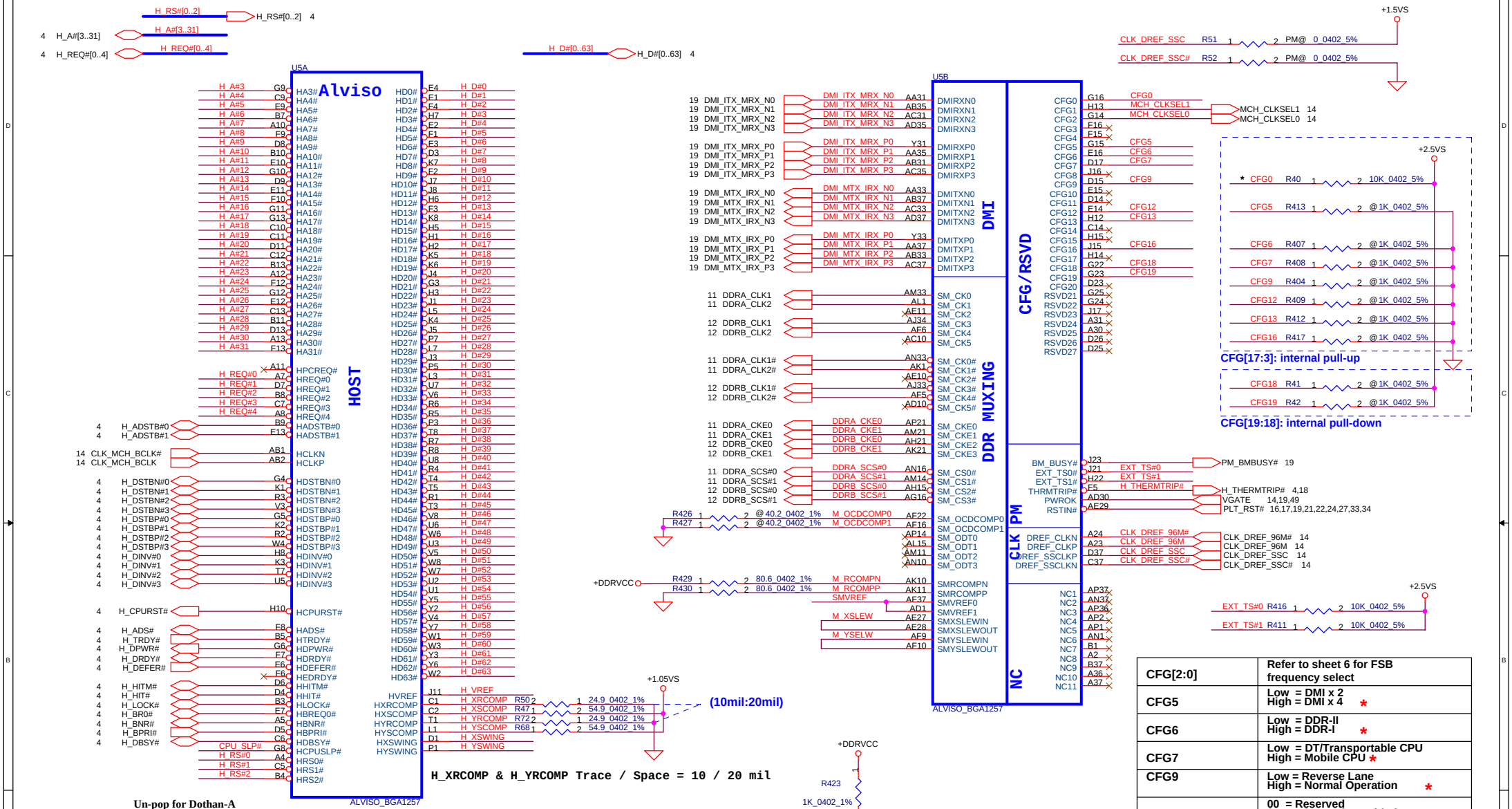

CFG[2:0]	Refer to sheet 6 for FSB frequency select
CFG5	Low = DMI x 2 High = DMI x 4 *
CFG6	Low = DDR-II High = DDR-I *
CFG7	Low = DT/Transportable CPU High = Mobile CPU *
CFG9	Low = Reverse Lane High = Normal Operation *
CFG[13:12]	00 = Reserved 01 = XOR Mode Enabled 10 = All Z Mode Enabled 11 = Normal Operation (Default) *
CFG16 (FSB Dynamic ODT)	Low = Disabled High = Enabled *
CFG18 (VCC Select)	Low = 1.05V (Default) * High = 1.5V
CFG19 (VTT Select)	Low = 1.05V (Default) * High = 1.2V

THIS SHEET OF ENGINEERING DRAWING IS THE PROPRIETARY PROPERTY OF COMPAL ELECTRONICS, INC. AND CONTAINS CONFIDENTIAL AND TRADE SECRET INFORMATION. THIS SHEET MAY NOT BE TRANSFERED FROM THE CUSTODY OF THE COMPETENT DIVISION OF R&D DEPARTMENT EXCEPT AS AUTHORIZED BY COMPAL ELECTRONICS, INC. NEITHER THIS SHEET NOR THE INFORMATION IT CONTAINS MAY BE USED BY OR DISCLOSED TO ANY THIRD PARTY WITHOUT PRIOR WRITTEN CONSENT OF COMPAL ELECTRONICS, INC.

Compal Electronics, Inc.

Title: Alviso HOST(1/5)

Size: A | Document Number: Sakhir LA-2491 | Rev: 1.0

Date: 星期一, 十二月 06, 2004 | Sheet 6 of 51

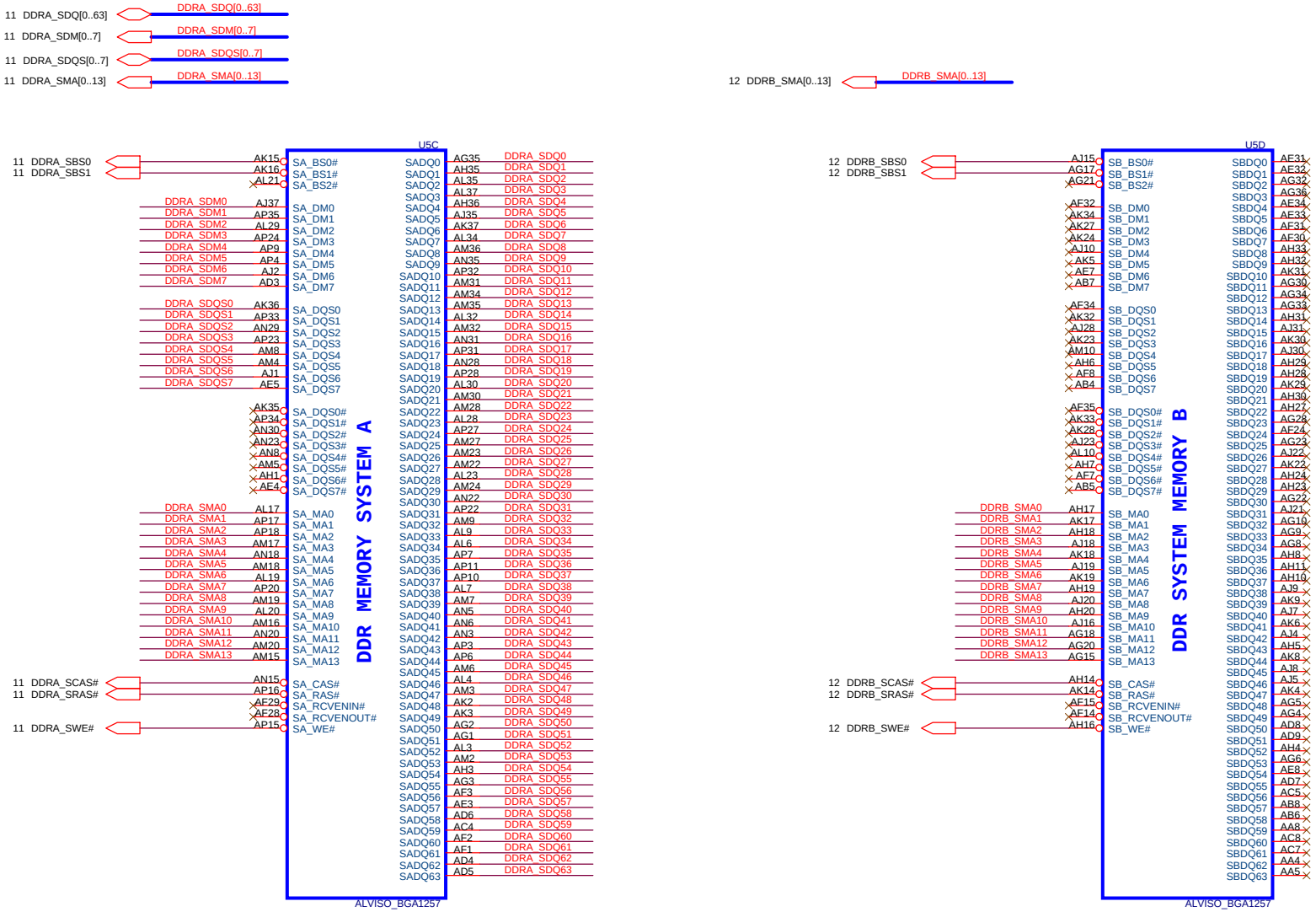

THIS SHEET OF ENGINEERING DRAWING IS THE PROPRIETARY PROPERTY OF COMPAL ELECTRONICS, INC. AND CONTAINS CONFIDENTIAL AND TRADE SECRET INFORMATION. THIS SHEET MAY NOT BE TRANSFERED FROM THE CUSTODY OF THE COMPETENT DIVISION OF R&D DEPARTMENT EXCEPT AS AUTHORIZED BY COMPAL ELECTRONICS, INC. NEITHER THIS SHEET NOR THE INFORMATION IT CONTAINS MAY BE USED BY OR DISCLOSED TO ANY THIRD PARTY WITHOUT PRIOR WRITTEN CONSENT OF COMPAL ELECTRONICS, INC.

Compal Electronics, Inc.			
Title	Alviso DDR(2/5)		
Size	Document Number	Rev	
	Sakhir LA-2491	1.0	
Date: 星期一, 十二月 06, 2004	Sheet 7 of 51		

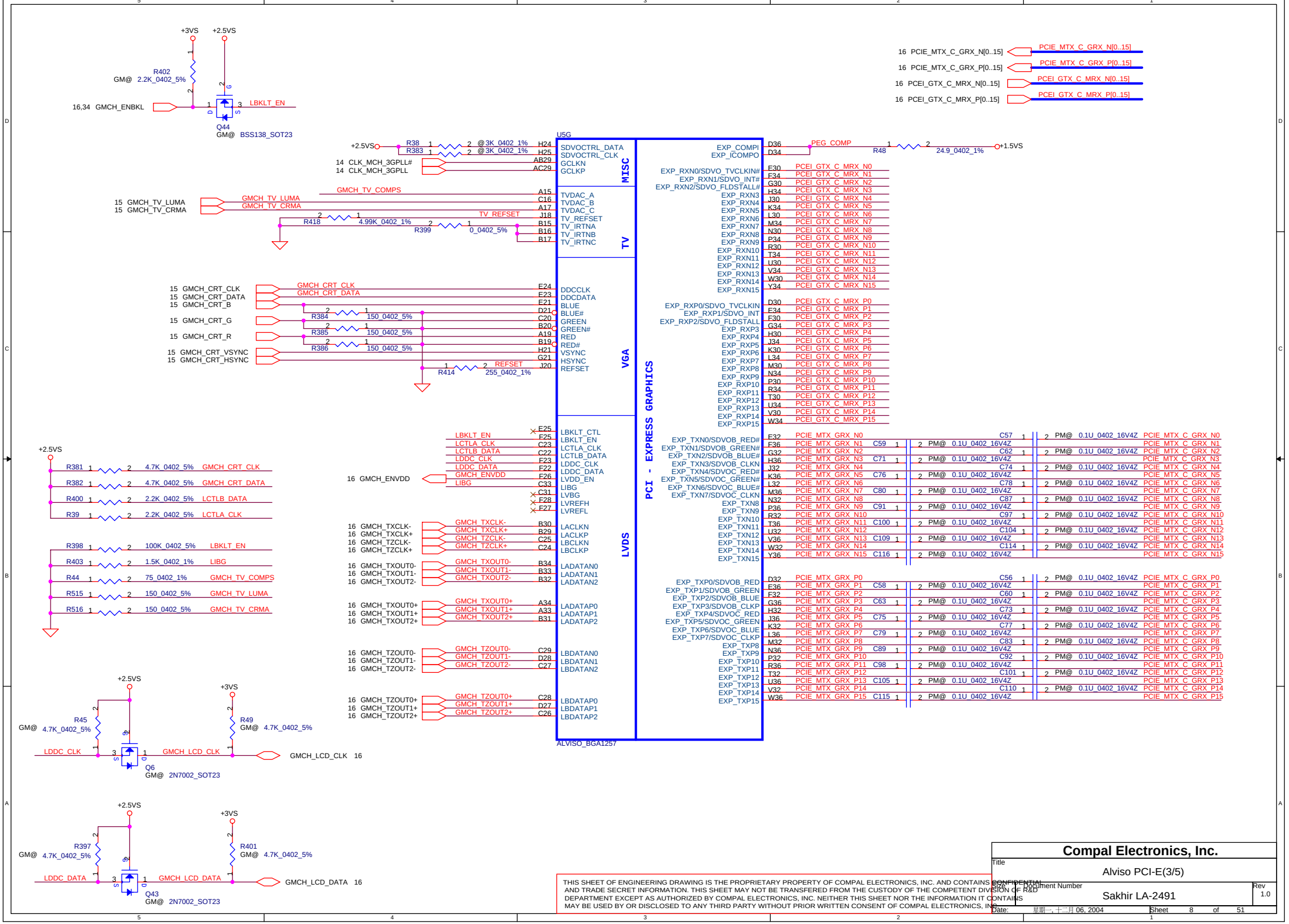

THIS SHEET OF ENGINEERING DRAWING IS THE PROPRIETARY PROPERTY OF COMPAL ELECTRONICS, INC. AND CONTAINS CONFIDENTIAL AND TRADE SECRET INFORMATION. THIS SHEET MAY NOT BE TRANSFERED FROM THE CUSTODY OF THE COMPETENT DIVISION OF R&D DEPARTMENT EXCEPT AS AUTHORIZED BY COMPAL ELECTRONICS, INC. NEITHER THIS SHEET NOR THE INFORMATION IT CONTAINS MAY BE USED BY OR DISCLOSED TO ANY THIRD PARTY WITHOUT PRIOR WRITTEN CONSENT OF COMPAL ELECTRONICS, INC.

Compal Electronics, Inc.		
Title: Alviso PCI-E(3/5)		
Document Number: Sakhir LA-2491		Rev 1.0
Date: 星期一, 十二月 06, 2004	Sheet 8 of 51	

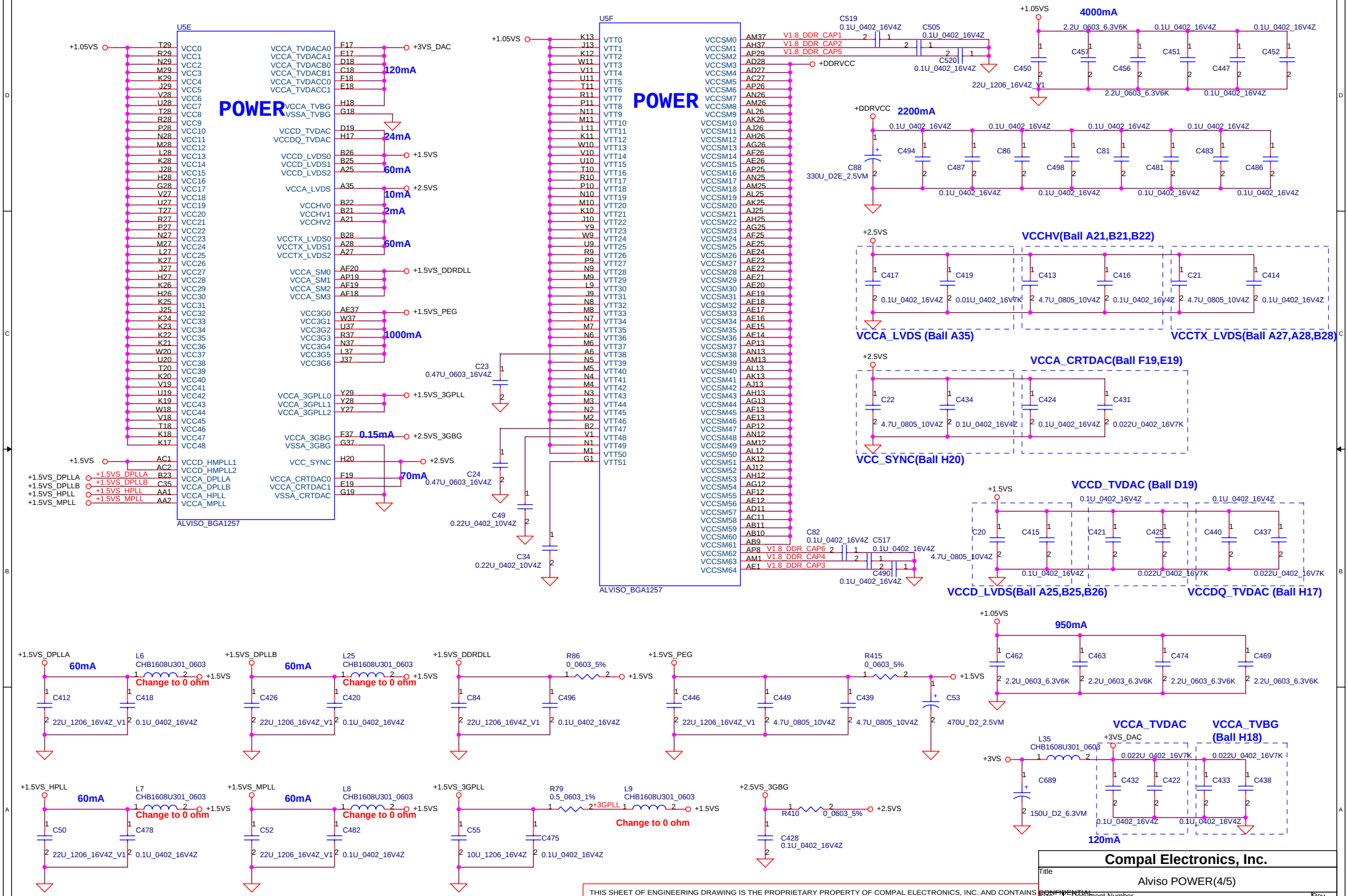

THIS SHEET OF ENGINEERING DRAWING IS THE PROPRIETARY PROPERTY OF COMPAL ELECTRONICS, INC. AND CONTAINS CONFIDENTIAL AND TRADE SECRET INFORMATION. THIS SHEET MAY NOT BE TRANSFERED FROM THE CUSTODY OF THE COMPETENT DIVISION OF R&D DEPARTMENT EXCEPT AS AUTHORIZED BY COMPAL ELECTRONICS, INC. NEITHER THIS SHEET NOR THE INFORMATION IT CONTAINS MAY BE USED BY OR DISCLOSED TO ANY THIRD PARTY WITHOUT PRIOR WRITTEN CONSENT OF COMPAL ELECTRONICS, INC.

Compal Electronics, Inc.			
Title	Alviso POWER(4/5)		
Size	Document Number	Rev	
	Sakhir LA-2491	1.0	
Date: 星期一, 十二月 06, 2004	Sheet 9 of 51		

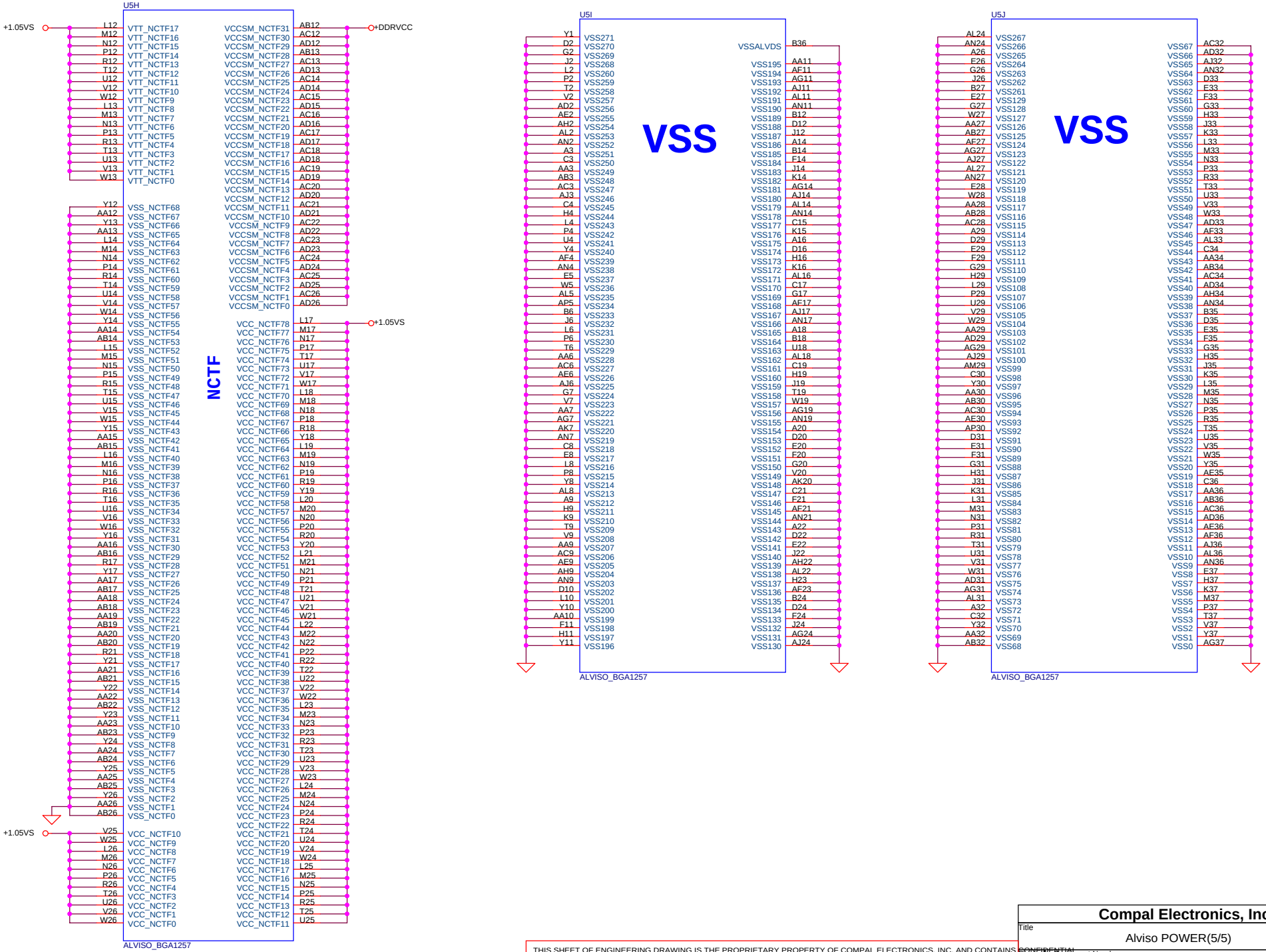

THIS SHEET OF ENGINEERING DRAWING IS THE PROPRIETARY PROPERTY OF COMPAL ELECTRONICS, INC. AND CONTAINS CONFIDENTIAL AND TRADE SECRET INFORMATION. THIS SHEET MAY NOT BE TRANSFERED FROM THE CUSTODY OF THE COMPETENT DIVISION OF R&D DEPARTMENT EXCEPT AS AUTHORIZED BY COMPAL ELECTRONICS, INC. NEITHER THIS SHEET NOR THE INFORMATION IT CONTAINS MAY BE USED BY OR DISCLOSED TO ANY THIRD PARTY WITHOUT PRIOR WRITTEN CONSENT OF COMPAL ELECTRONICS, INC.

Compal Electronics, Inc.

Title	Alviso POWER(5/5)
Size	C
Document Number	Sakhir LA-2491
Rev	1.0
Date:	星期一, 十二月 06, 2004
Sheet	10 of 51

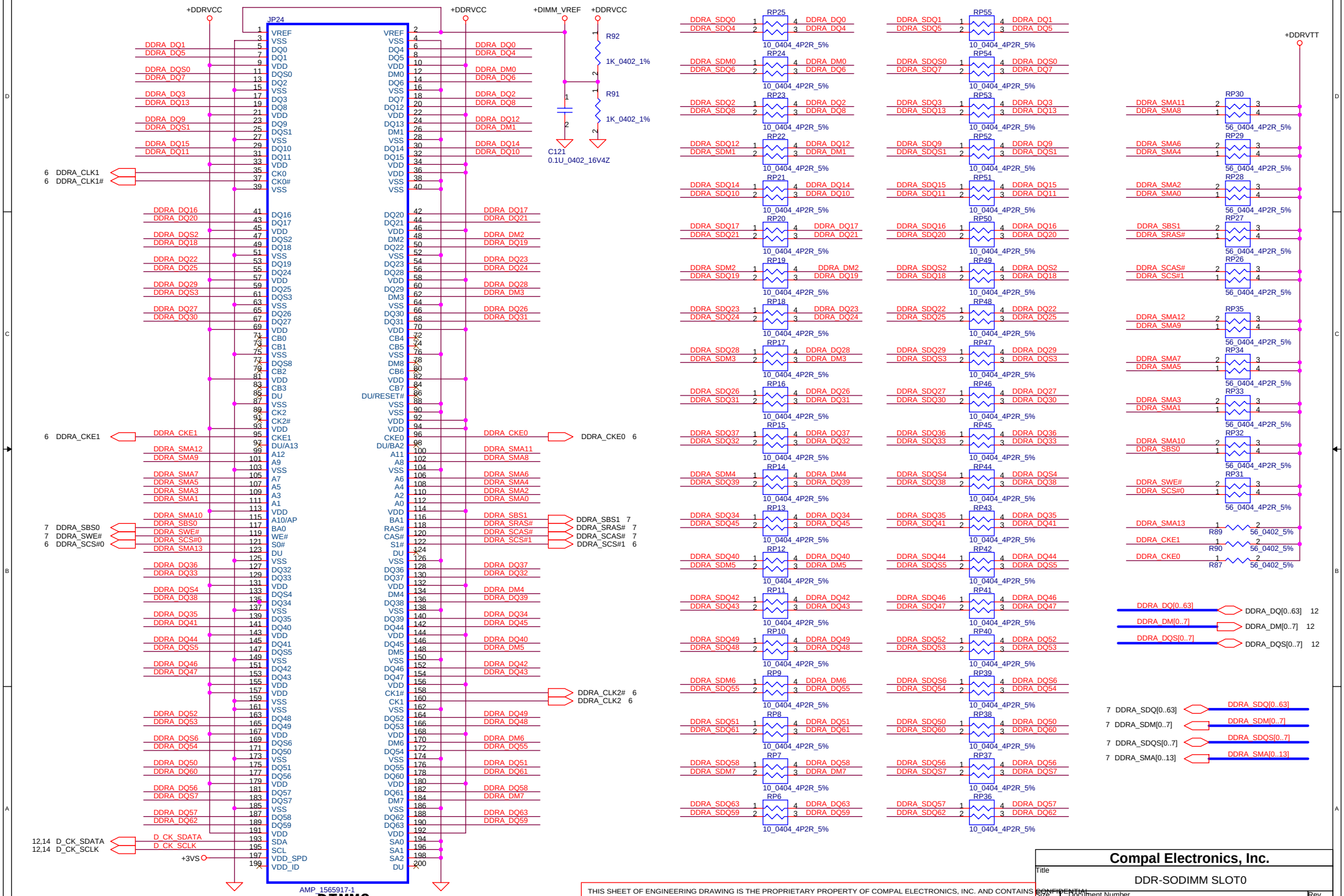

THIS SHEET OF ENGINEERING DRAWING IS THE PROPRIETARY PROPERTY OF COMPAL ELECTRONICS, INC. AND CONTAINS CONFIDENTIAL AND TRADE SECRET INFORMATION. THIS SHEET MAY NOT BE TRANSFERED FROM THE CUSTODY OF THE COMPETENT DIVISION OF R&D DEPARTMENT EXCEPT AS AUTHORIZED BY COMPAL ELECTRONICS, INC. NEITHER THIS SHEET NOR THE INFORMATION IT CONTAINS MAY BE USED BY OR DISCLOSED TO ANY THIRD PARTY WITHOUT PRIOR WRITTEN CONSENT OF COMPAL ELECTRONICS, INC.

Compal Electronics, Inc.

Title	DDR-SODIMM SLOT0
Document Number	Sakhir LA-2491
Rev	1.0
Date:	星期一, 十二月 06, 2004
Sheet	11 of 51

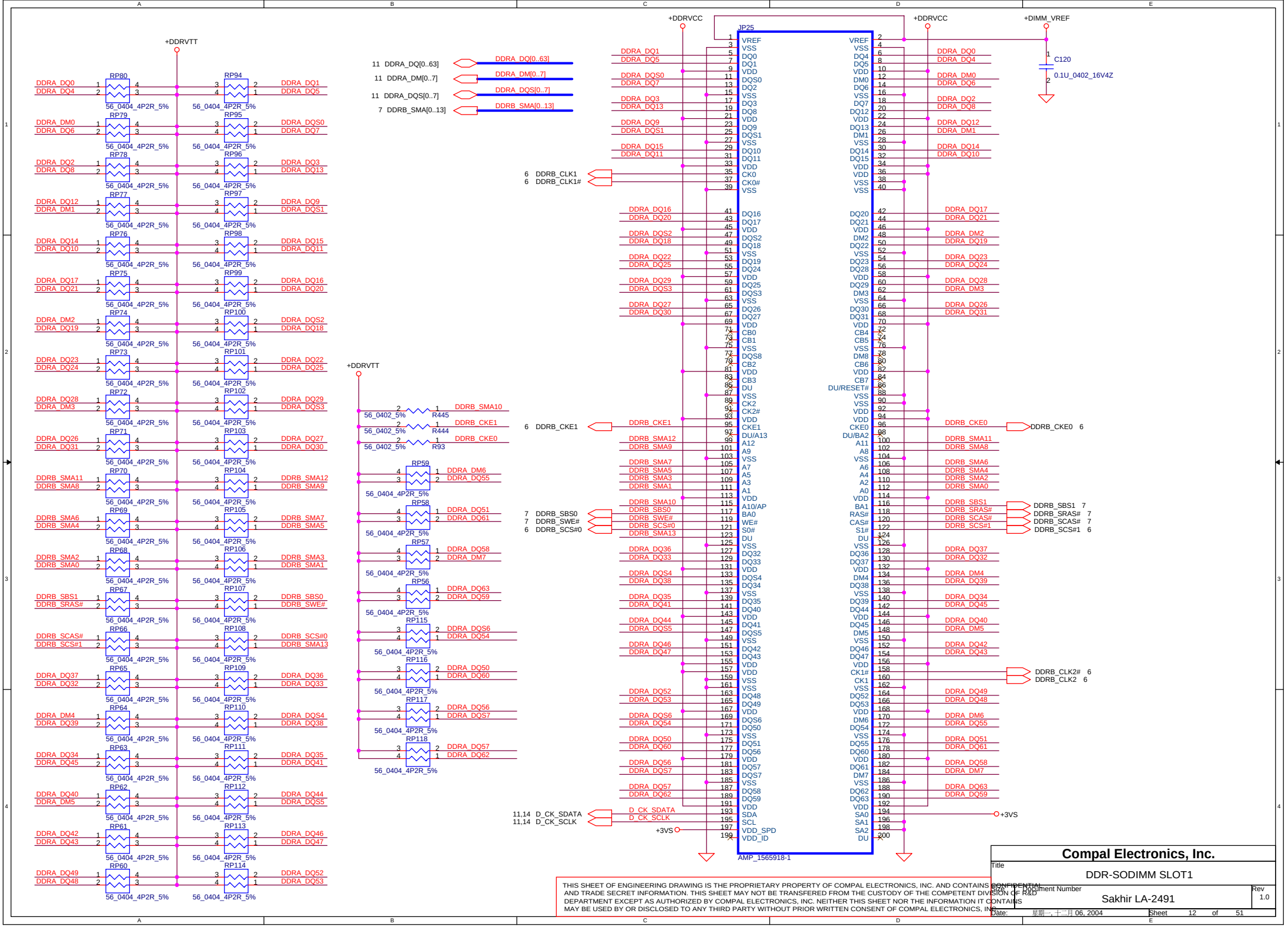

THIS SHEET OF ENGINEERING DRAWING IS THE PROPRIETARY PROPERTY OF COMPAL ELECTRONICS, INC. AND CONTAINS CONFIDENTIAL AND TRADE SECRET INFORMATION. THIS SHEET MAY NOT BE TRANSFERED FROM THE CUSTODY OF THE COMPETENT DIVISION OF R&D DEPARTMENT EXCEPT AS AUTHORIZED BY COMPAL ELECTRONICS, INC. NEITHER THIS SHEET NOR THE INFORMATION IT CONTAINS MAY BE USED BY OR DISCLOSED TO ANY THIRD PARTY WITHOUT PRIOR WRITTEN CONSENT OF COMPAL ELECTRONICS, INC.

Compal Electronics, Inc.

Title: DDR-SODIMM SLOT1

Size: C | Document Number: Sakhir LA-2491 | Rev: 1.0

Date: 星期一, 十二月 06, 2004 | Sheet 12 of 51

Layout note :

Distribute as close as possible to DDR-SODIMM.

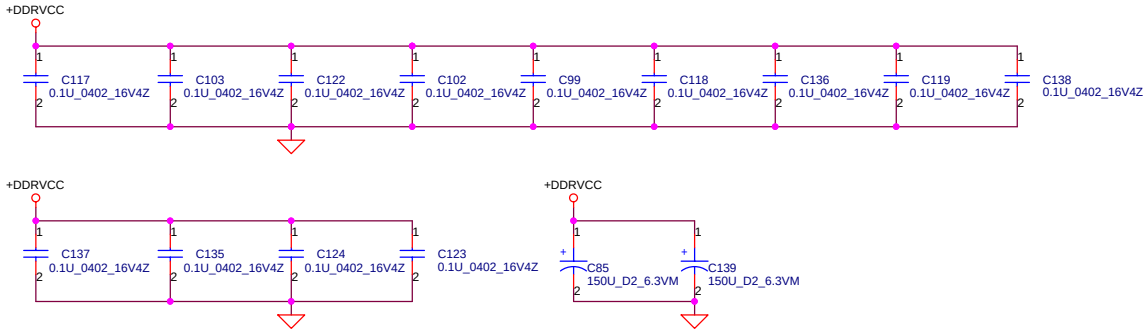

Layout note :

Place one cap close to every 2 pull up resistors termination to +1.25V

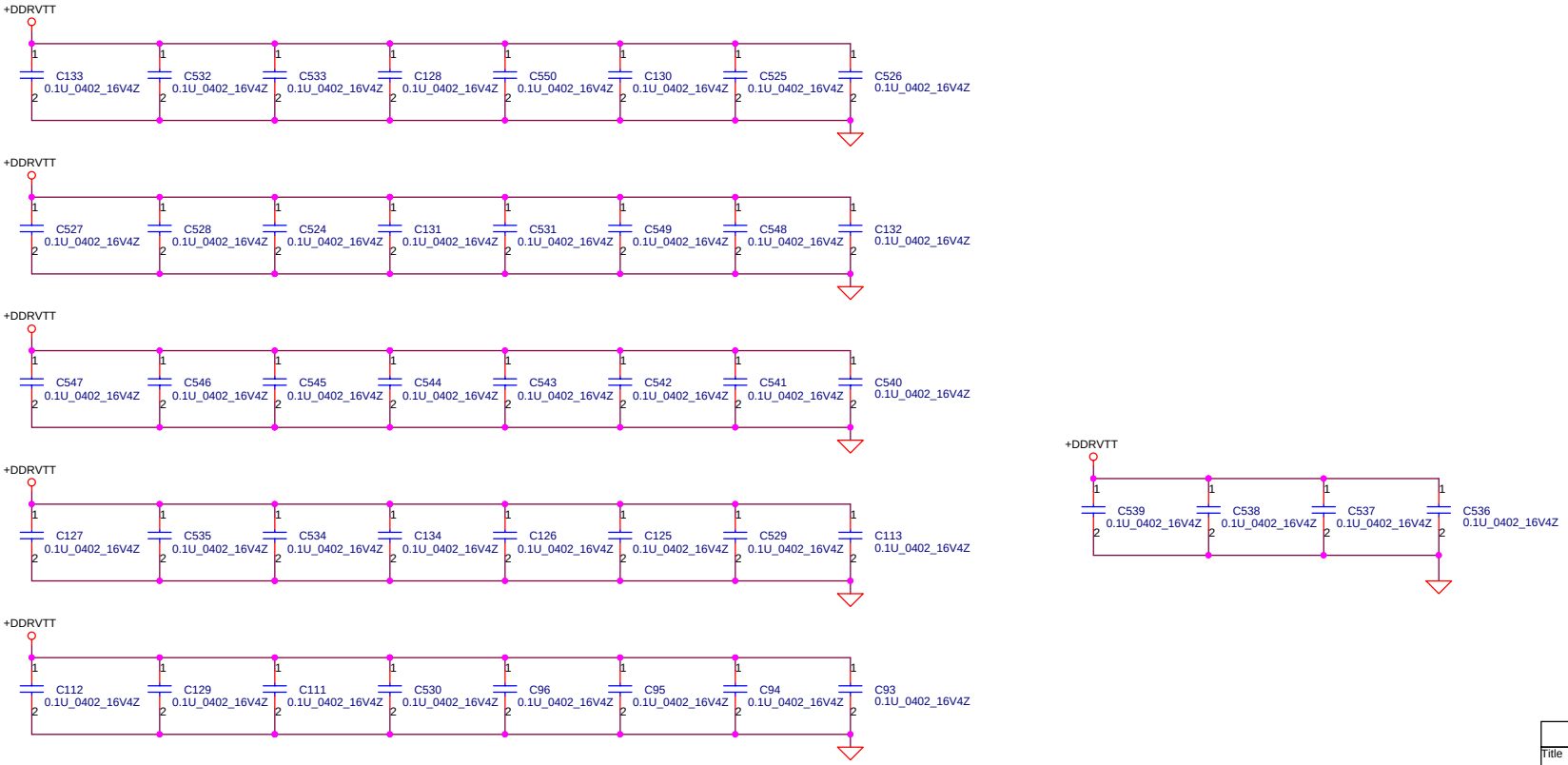

THIS SHEET OF ENGINEERING DRAWING IS THE PROPRIETARY PROPERTY OF COMPAL ELECTRONICS, INC. AND CONTAINS CONFIDENTIAL AND TRADE SECRET INFORMATION. THIS SHEET MAY NOT BE TRANSFERED FROM THE CUSTODY OF THE COMPETENT DIVISION OF R&D DEPARTMENT EXCEPT AS AUTHORIZED BY COMPAL ELECTRONICS, INC. NEITHER THIS SHEET NOR THE INFORMATION IT CONTAINS MAY BE USED BY OR DISCLOSED TO ANY THIRD PARTY WITHOUT PRIOR WRITTEN CONSENT OF COMPAL ELECTRONICS, INC.

Compal Electronics, Inc.

Title	DDR SODIMM Decoupling
Size	Document Number: Sakhir LA-2491
Rev	1.0
Date: 星期一, 十二月 06, 2004	Sheet 13 of 51

Clock Generator

FSC CLKSEL0	FSB CLKSEL1	FSA CLKSEL2	CPU MHz	SRC MHz	PCI MHz
* 1	0	1	100	100	33.3
0	0	1	133	100	33.3
0	1	1	166	100	33.3
0	1	0	200	100	33.3

Table : ICS 954206B

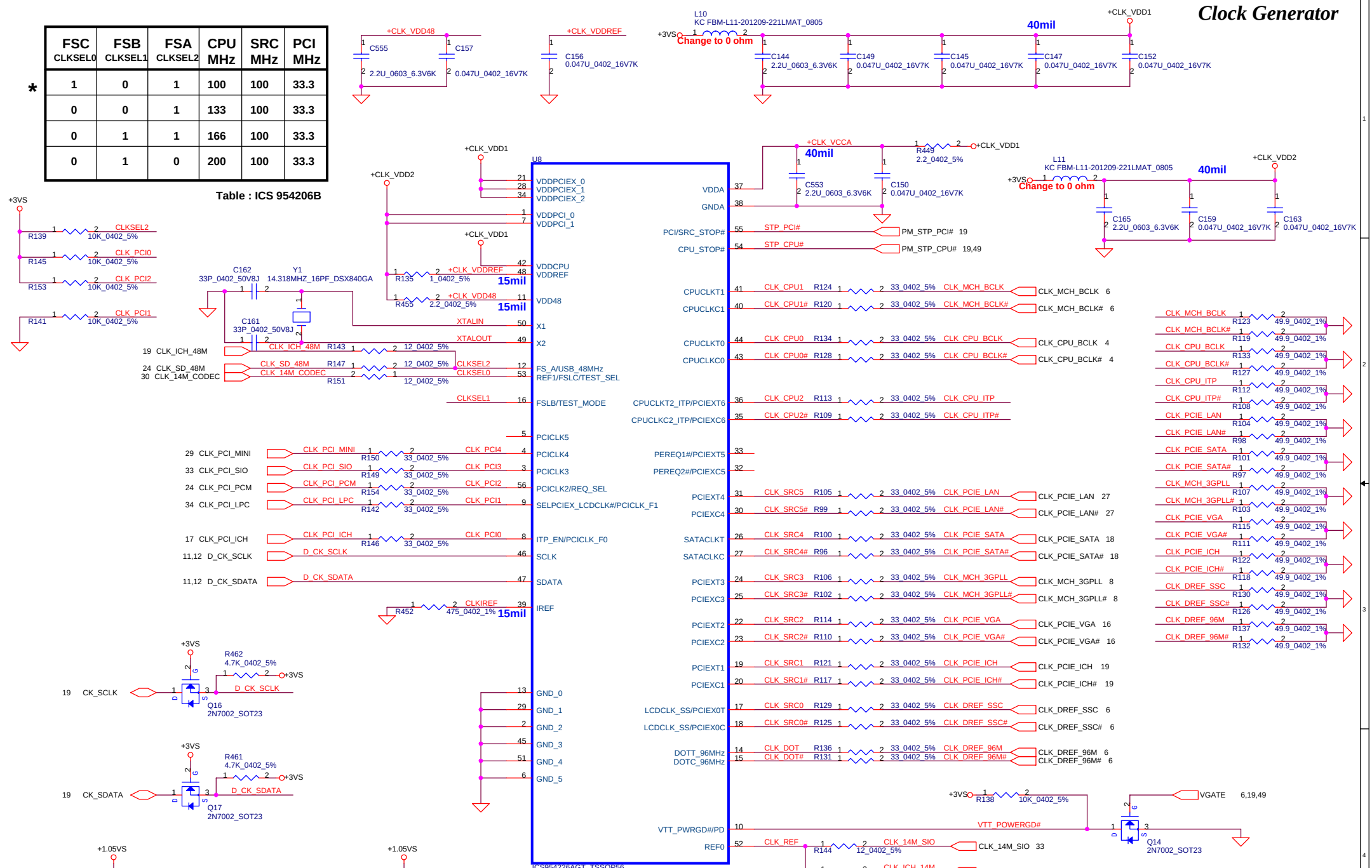

THIS SHEET OF ENGINEERING DRAWING IS THE PROPRIETARY PROPERTY OF COMPAL ELECTRONICS, INC. AND CONTAINS CONFIDENTIAL AND TRADE SECRET INFORMATION. THIS SHEET MAY NOT BE TRANSFERED FROM THE CUSTODY OF THE COMPETENT DIVISION OF R&D DEPARTMENT EXCEPT AS AUTHORIZED BY COMPAL ELECTRONICS, INC. NEITHER THIS SHEET NOR THE INFORMATION IT CONTAINS MAY BE USED BY OR DISCLOSED TO ANY THIRD PARTY WITHOUT PRIOR WRITTEN CONSENT OF COMPAL ELECTRONICS, INC.

Compal Electronics, Inc.

Title	Clock Generator
Document Number	Sakhir LA-2491
Rev	1.0
Date:	星期一, 十二月 06, 2004
Sheet	14 of 51

CRT Connector

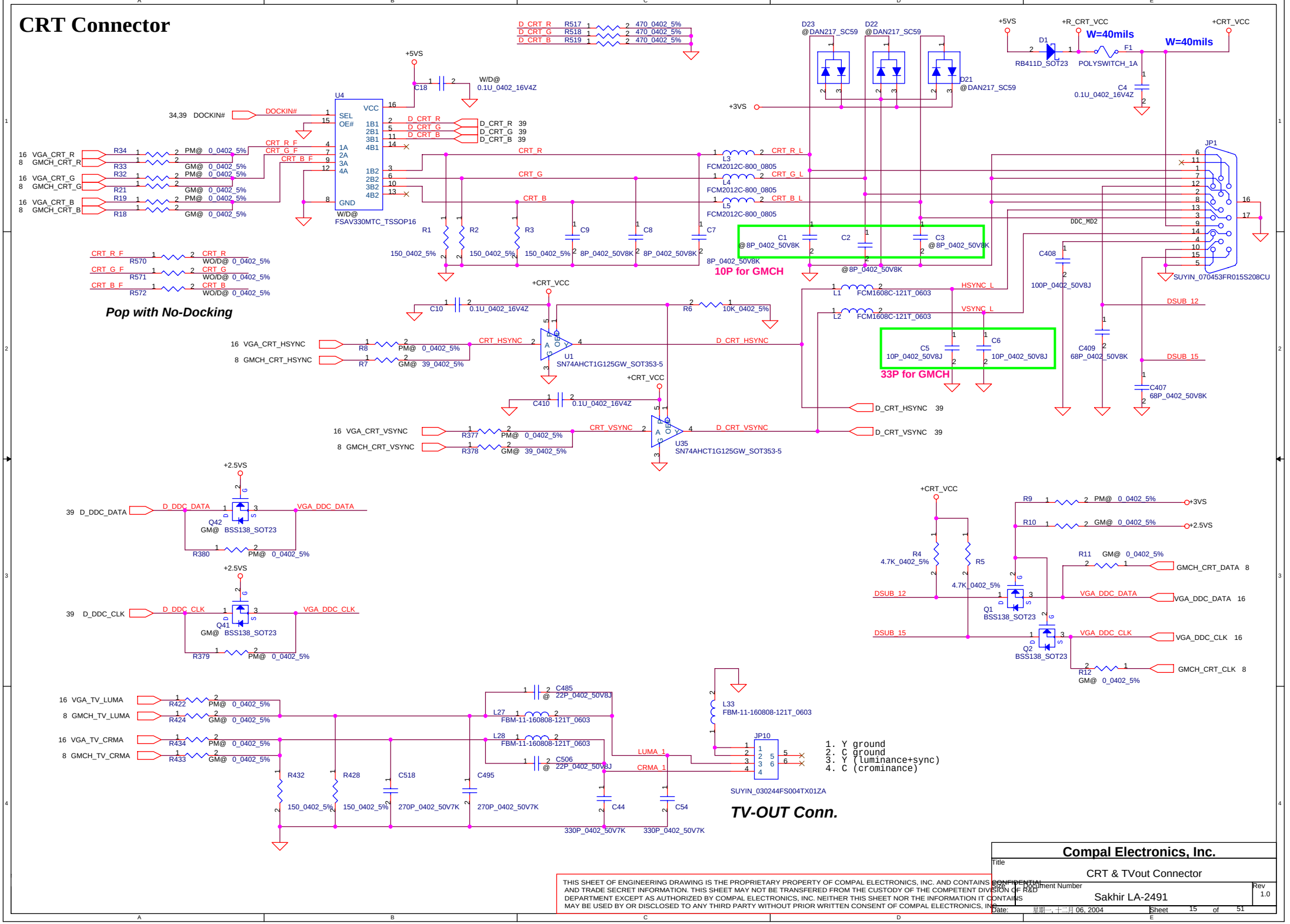

Compal Electronics, Inc.	
Title	CRT & TVout Connector
Document Number	Sakhir LA-2491
Rev	1.0
Date: 星期一, 十二月 06, 2004	Sheet 15 of 51

THIS SHEET OF ENGINEERING DRAWING IS THE PROPRIETARY PROPERTY OF COMPAL ELECTRONICS, INC. AND CONTAINS CONFIDENTIAL AND TRADE SECRET INFORMATION. THIS SHEET MAY NOT BE TRANSFERED FROM THE CUSTODY OF THE COMPETENT DIVISION OF R&D DEPARTMENT EXCEPT AS AUTHORIZED BY COMPAL ELECTRONICS, INC. NEITHER THIS SHEET NOR THE INFORMATION IT CONTAINS MAY BE USED BY OR DISCLOSED TO ANY THIRD PARTY WITHOUT PRIOR WRITTEN CONSENT OF COMPAL ELECTRONICS, INC.

LCD POWER CIRCUIT

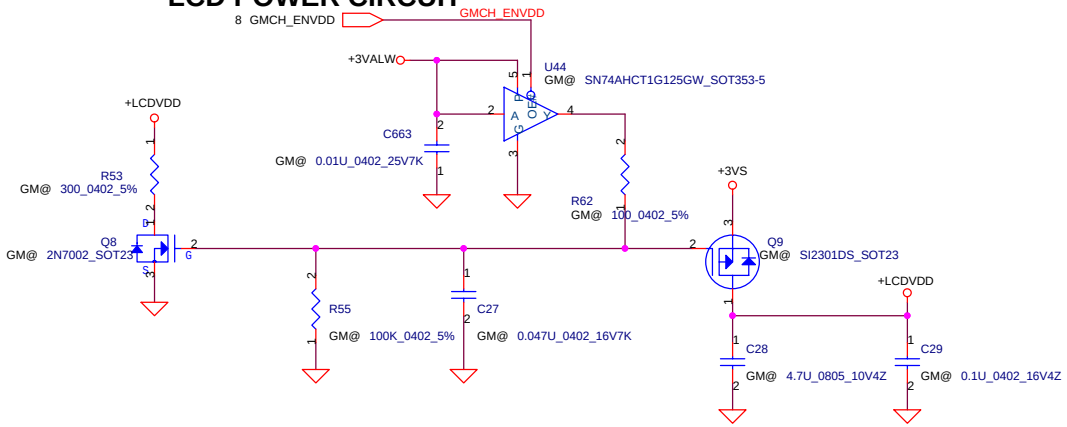

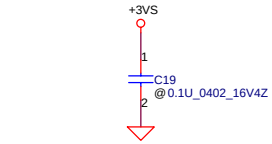

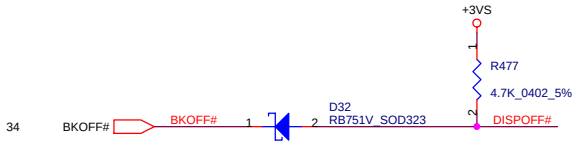

LCD/PANEL BD. Conn.

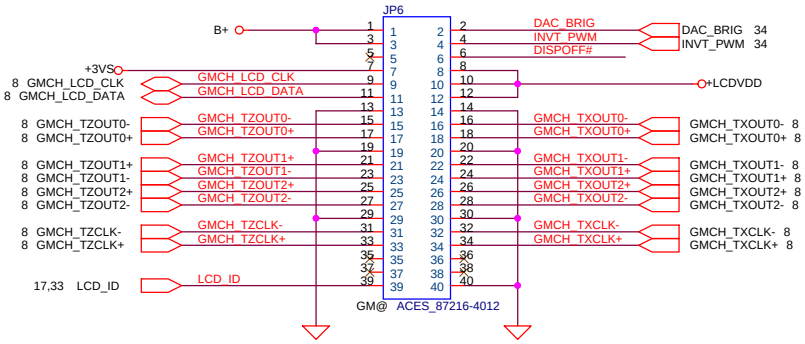

VGA BOARD Conn.

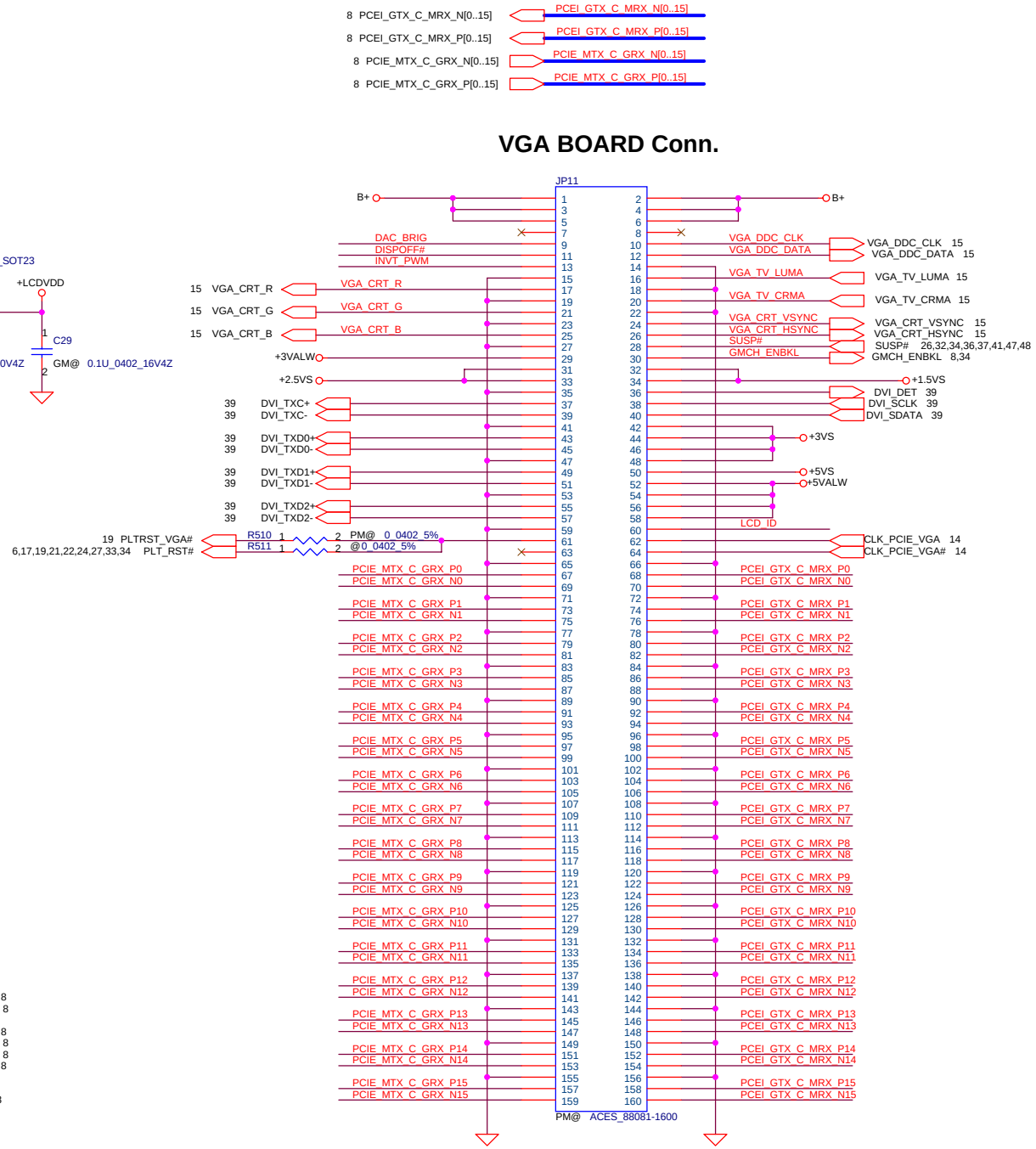

THIS SHEET OF ENGINEERING DRAWING IS THE PROPRIETARY PROPERTY OF COMPAL ELECTRONICS, INC. AND CONTAINS CONFIDENTIAL AND TRADE SECRET INFORMATION. THIS SHEET MAY NOT BE TRANSFERED FROM THE CUSTODY OF THE COMPETENT DIVISION OF R&D DEPARTMENT EXCEPT AS AUTHORIZED BY COMPAL ELECTRONICS, INC. NEITHER THIS SHEET NOR THE INFORMATION IT CONTAINS MAY BE USED BY OR DISCLOSED TO ANY THIRD PARTY WITHOUT PRIOR WRITTEN CONSENT OF COMPAL ELECTRONICS, INC.

Compal Electronics, Inc.	
Title	VGA / LCD CONN.
Size / Document Number	Sakhir LA-2491
Rev	1.0
Date: 星期一, 十二月 06, 2004	Sheet 16 of 51

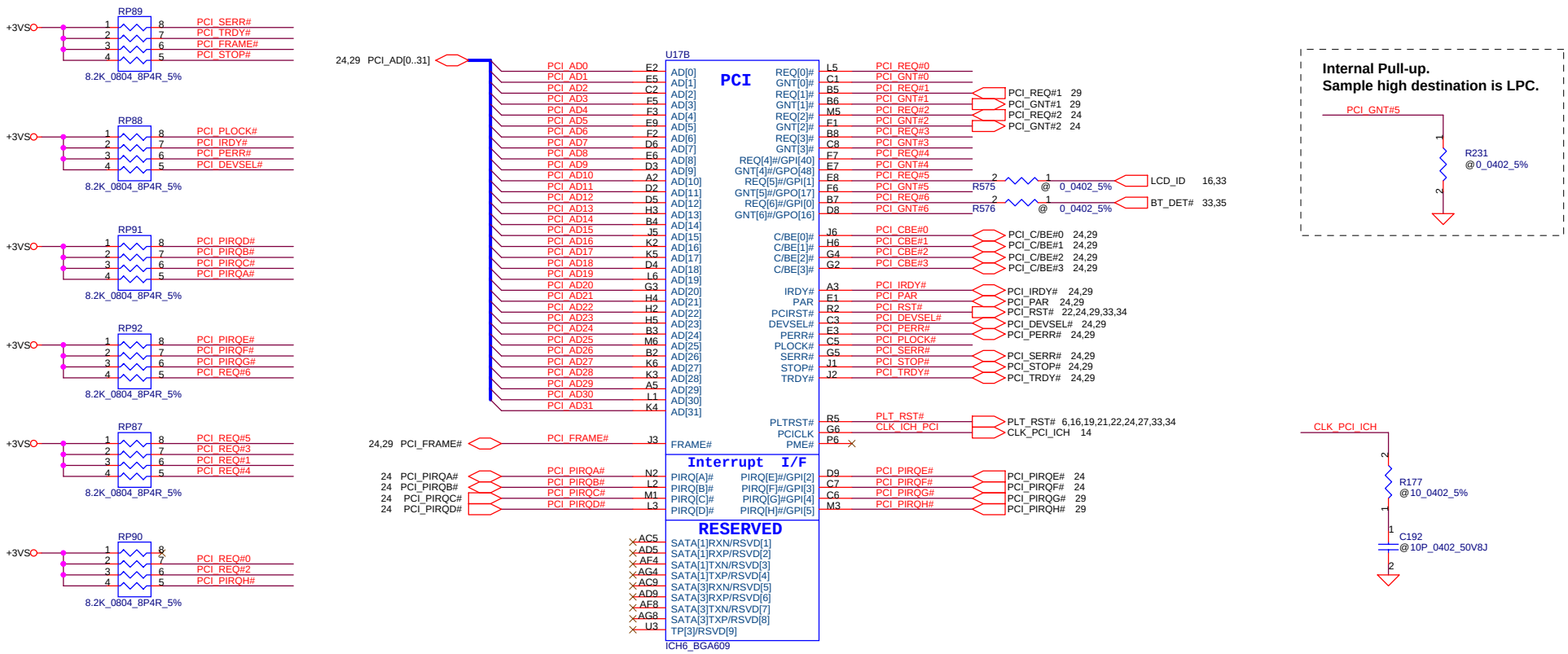

THIS SHEET OF ENGINEERING DRAWING IS THE PROPRIETARY PROPERTY OF COMPAL ELECTRONICS, INC. AND CONTAINS CONFIDENTIAL AND TRADE SECRET INFORMATION. THIS SHEET MAY NOT BE TRANSFERED FROM THE CUSTODY OF THE COMPETENT DIVISION OF R&D DEPARTMENT EXCEPT AS AUTHORIZED BY COMPAL ELECTRONICS, INC. NEITHER THIS SHEET NOR THE INFORMATION IT CONTAINS MAY BE USED BY OR DISCLOSED TO ANY THIRD PARTY WITHOUT PRIOR WRITTEN CONSENT OF COMPAL ELECTRONICS, INC.

Compal Electronics, Inc.

Title	ICH6(1/4)
Size / Document Number	Sakhir LA-2491
Rev	1.0
Date:	星期一, 十二月 06, 2004
Sheet	17 of 51

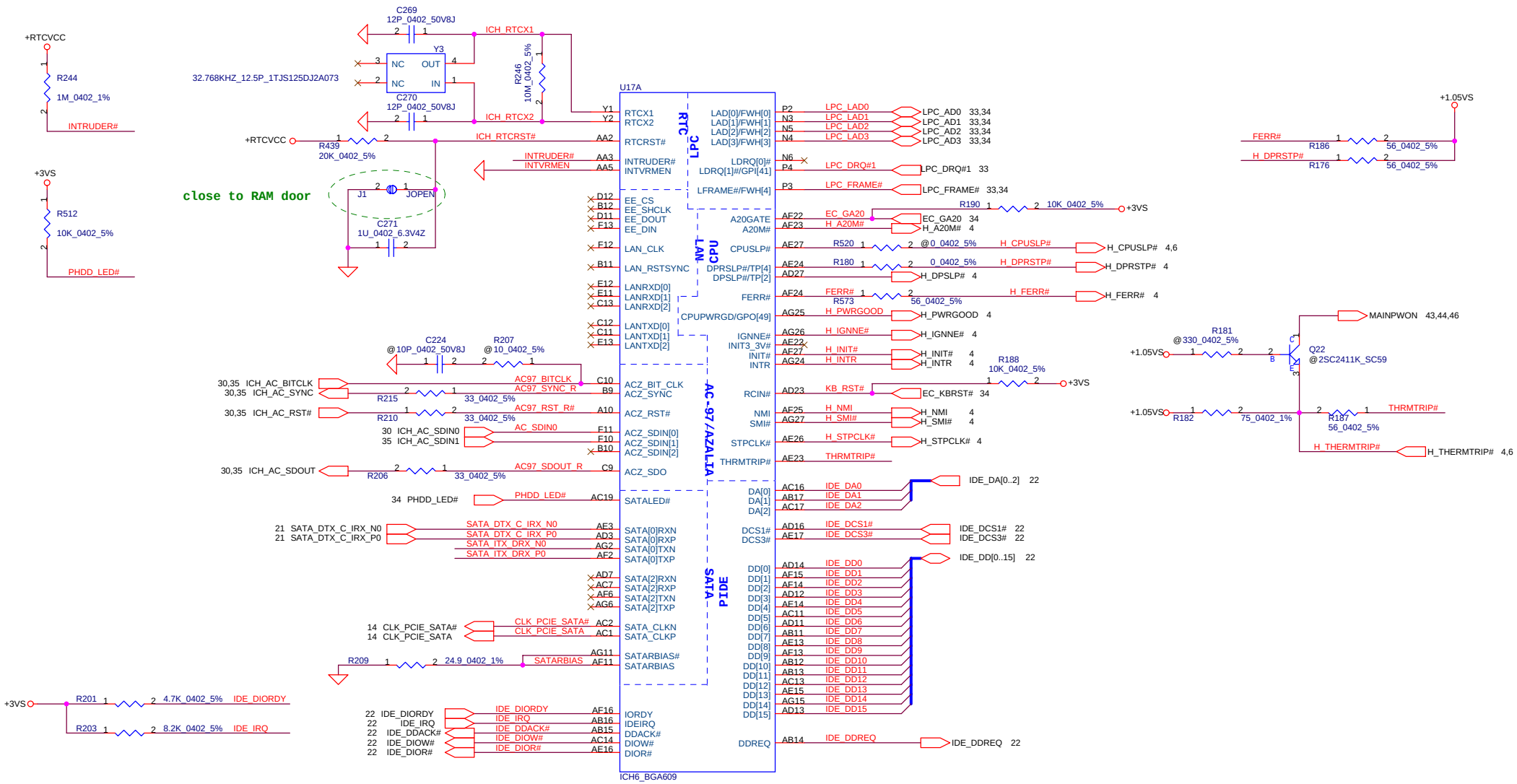

Place near ICH6 side.

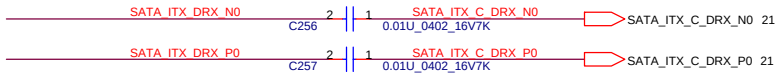

THIS SHEET OF ENGINEERING DRAWING IS THE PROPRIETARY PROPERTY OF COMPAL ELECTRONICS, INC. AND CONTAINS CONFIDENTIAL AND TRADE SECRET INFORMATION. THIS SHEET MAY NOT BE TRANSFERED FROM THE CUSTODY OF THE COMPETENT DIVISION OF R&D DEPARTMENT EXCEPT AS AUTHORIZED BY COMPAL ELECTRONICS, INC. NEITHER THIS SHEET NOR THE INFORMATION IT CONTAINS MAY BE USED BY OR DISCLOSED TO ANY THIRD PARTY WITHOUT PRIOR WRITTEN CONSENT OF COMPAL ELECTRONICS, INC.

Compal Electronics, Inc.

Title	ICH6(2/4)
Size	Document Number: Sakhir LA-2491
Rev	1.0
Date: 星期一, 十二月 06, 2004	Sheet 18 of 51

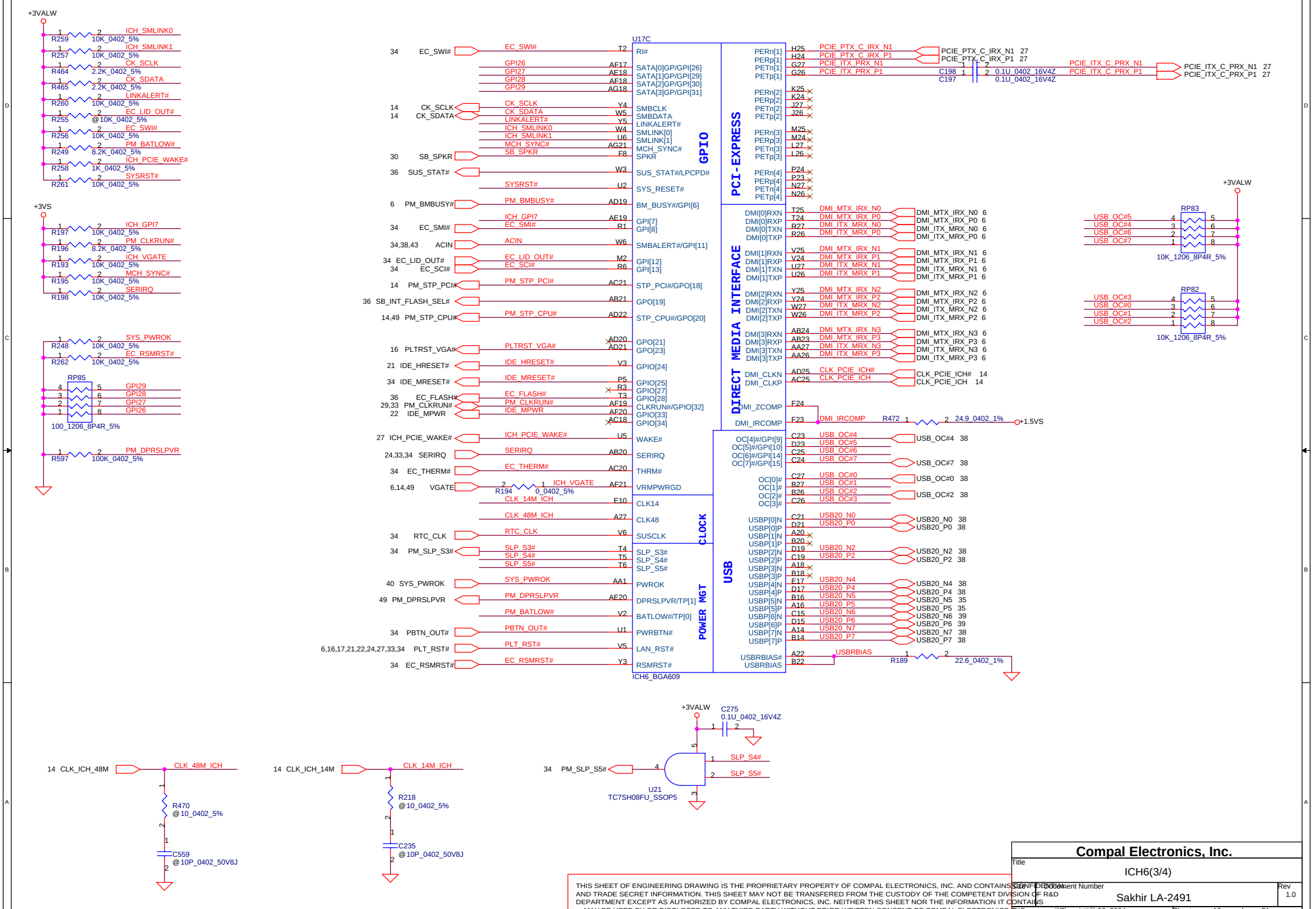

THIS SHEET OF ENGINEERING DRAWING IS THE PROPRIETARY PROPERTY OF COMPAL ELECTRONICS, INC. AND CONTAINS CONFIDENTIAL AND TRADE SECRET INFORMATION. THIS SHEET MAY NOT BE TRANSFERED FROM THE CUSTODY OF THE COMPETENT DIVISION OF R&D DEPARTMENT EXCEPT AS AUTHORIZED BY COMPAL ELECTRONICS, INC. NEITHER THIS SHEET NOR THE INFORMATION IT CONTAINS MAY BE USED BY OR DISCLOSED TO ANY THIRD PARTY WITHOUT PRIOR WRITTEN CONSENT OF COMPAL ELECTRONICS, INC.

Compal Electronics, Inc.

Title: ICH6(3/4)

Size: D | Document Number: Sakhir LA-2491 | Rev: 1.0

Date: 星期一, 十二月 06, 2004 | Sheet 19 of 51

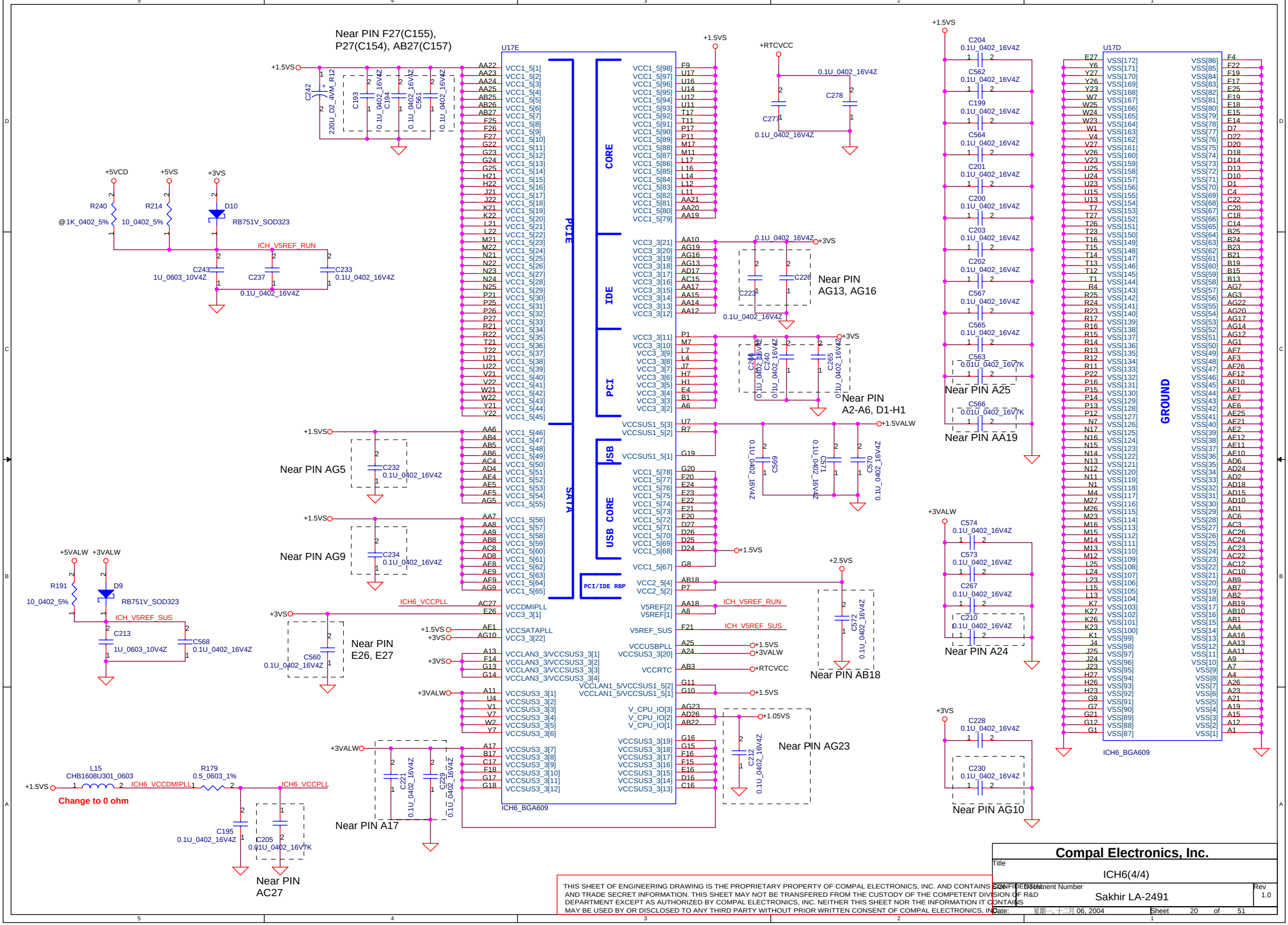

THIS SHEET OF ENGINEERING DRAWING IS THE PROPRIETARY PROPERTY OF COMPAL ELECTRONICS, INC. AND CONTAINS CONFIDENTIAL AND TRADE SECRET INFORMATION. THIS SHEET MAY NOT BE TRANSFERED FROM THE CUSTODY OF THE COMPETENT DIVISION OF R&D DEPARTMENT EXCEPT AS AUTHORIZED BY COMPAL ELECTRONICS, INC. NEITHER THIS SHEET NOR THE INFORMATION IT CONTAINS MAY BE USED BY OR DISCLOSED TO ANY THIRD PARTY WITHOUT PRIOR WRITTEN CONSENT OF COMPAL ELECTRONICS, INC.

Compal Electronics, Inc.

Title: ICH6(4/4)

Document Number: Sakhir LA-2491

Rev: 1.0

Date: 星期一, 十二月 06, 2004

Sheet 20 of 51

SATA Module

Sets maximum transfer rate and UDMA mode

CNFG2 INT PD	CNFG1	CNFG0 INT PD	NOTE
0	0	0	Device Mode 100MB/s
0	0	1	Device Mode 133MB/s
0	1	0	Device Mode 150MB/s
1	0	0	Host Mode 100MB/s
1	0	1	Host Mode 133MB/s
1	1	0	Host Mode 150MB/s
0	1	1	Reserved
1	1	1	Reserved

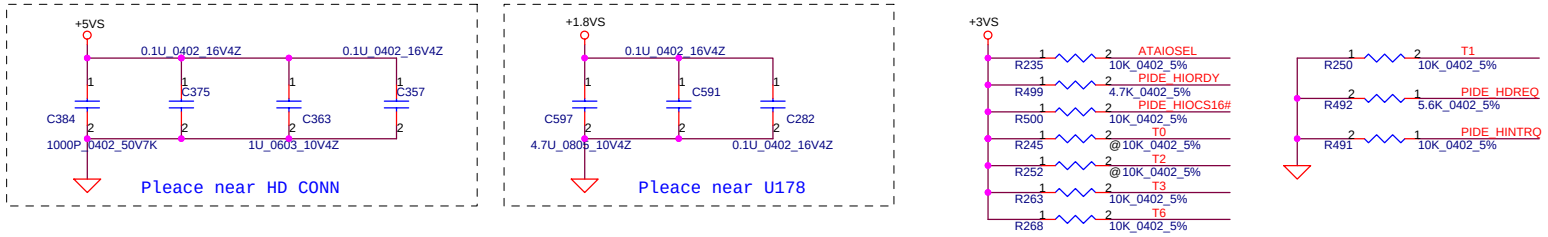

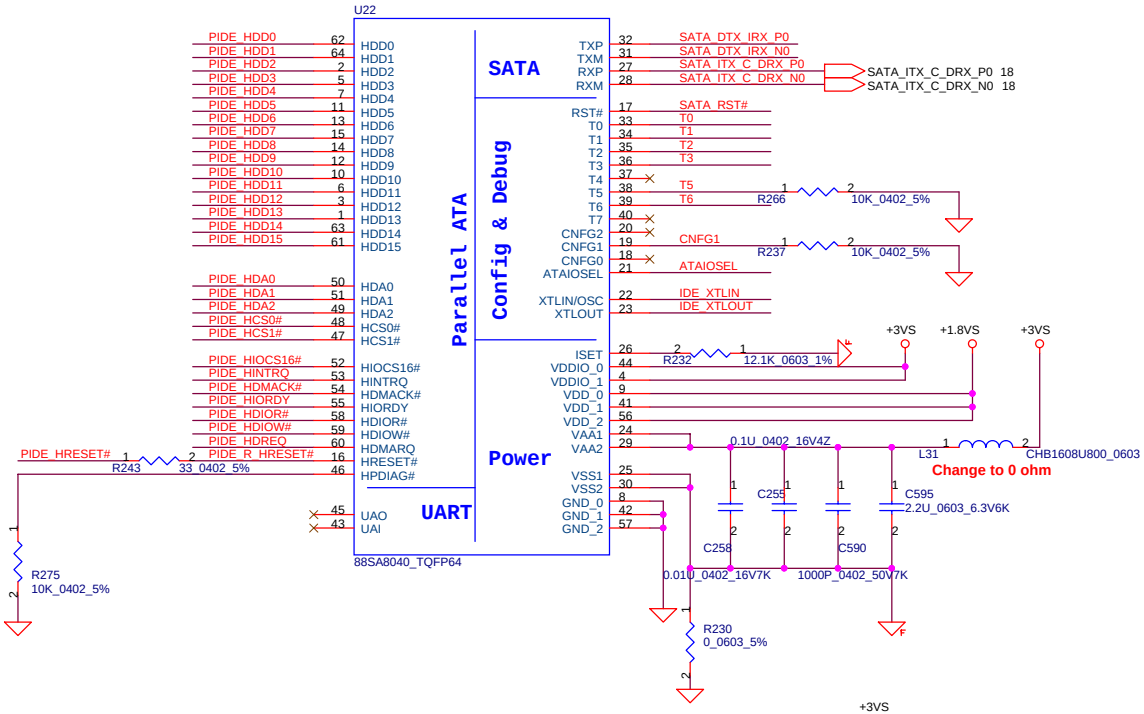

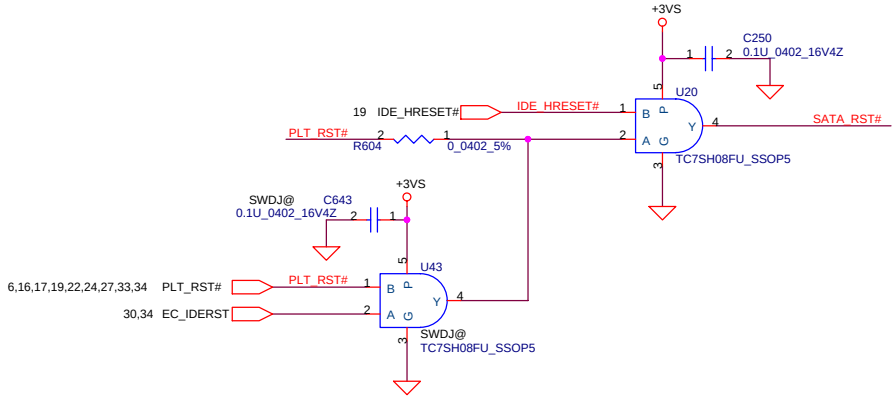

P-ATA HDD Conn.

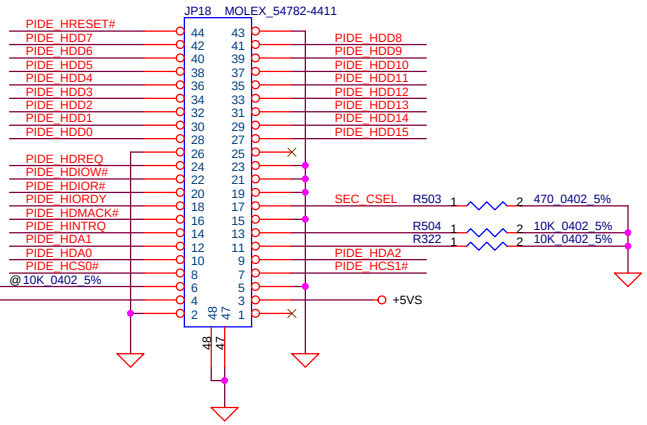

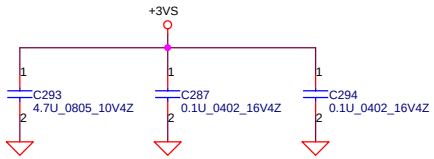

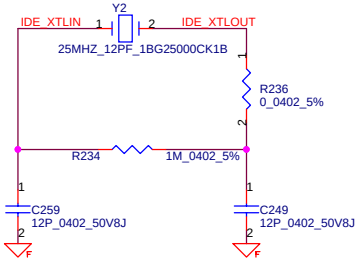

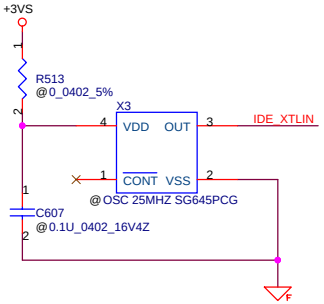

25MHz reference clock T[4:3] = 01

Place near connector side.

THIS SHEET OF ENGINEERING DRAWING IS THE PROPRIETARY PROPERTY OF COMPAL ELECTRONICS, INC. AND CONTAINS CONFIDENTIAL AND TRADE SECRET INFORMATION. THIS SHEET MAY NOT BE TRANSFERED FROM THE CUSTODY OF THE COMPETENT DIVISION OF R&D DEPARTMENT EXCEPT AS AUTHORIZED BY COMPAL ELECTRONICS, INC. NEITHER THIS SHEET NOR THE INFORMATION IT CONTAINS MAY BE USED BY OR DISCLOSED TO ANY THIRD PARTY WITHOUT PRIOR WRITTEN CONSENT OF COMPAL ELECTRONICS, INC.

Compal Electronics, Inc.

Title: PATA / SATA HDD Connector

Size: A | Document Number: Sakhir LA-2491 | Rev: 1.0

Date: 星期一, 十二月 06, 2004 | Sheet 21 of 51

Placea caps. near ODD CONN.

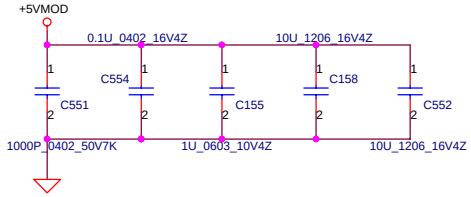

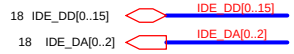

Module Conn.

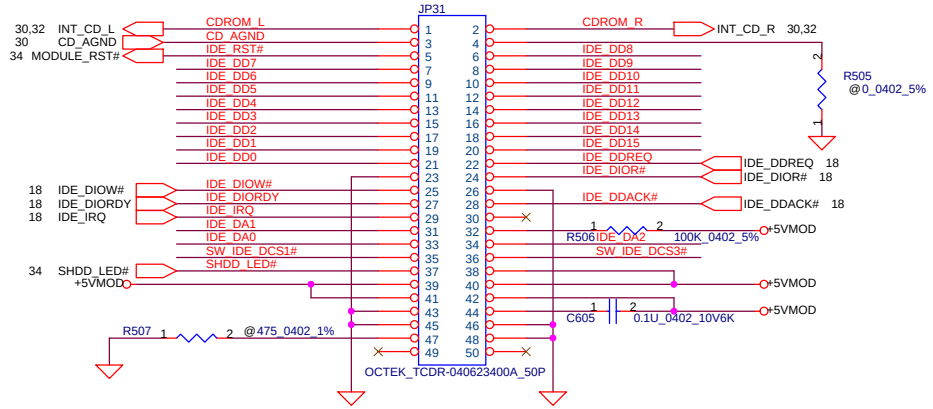

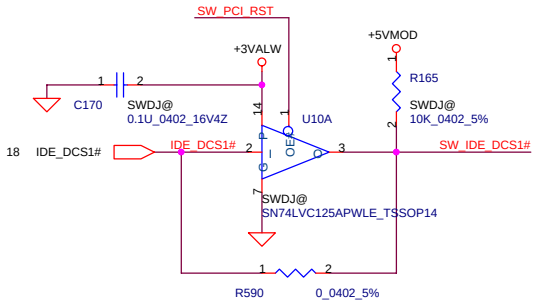

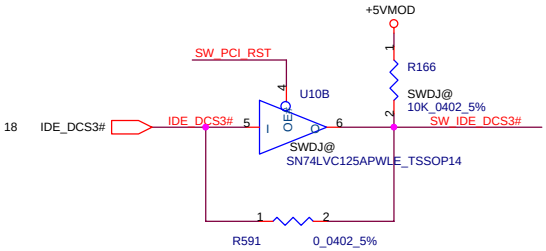

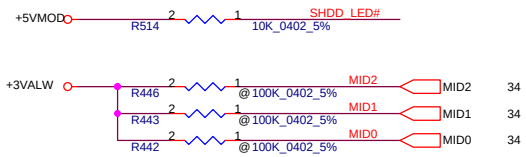

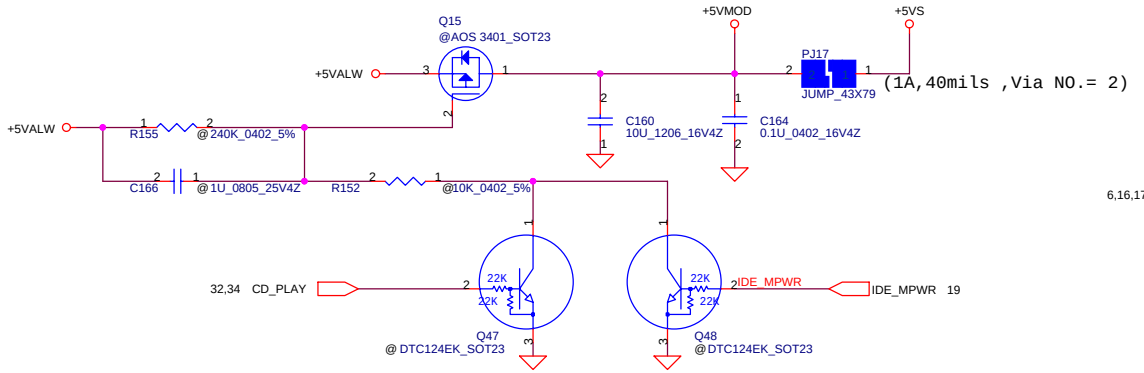

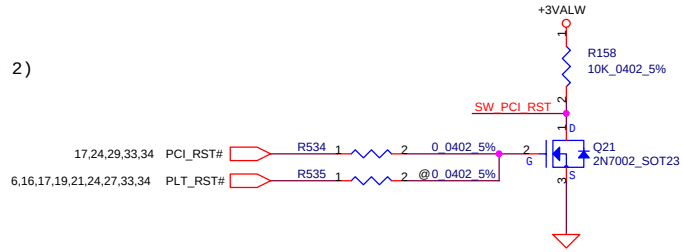

THIS SHEET OF ENGINEERING DRAWING IS THE PROPRIETARY PROPERTY OF COMPAL ELECTRONICS, INC. AND CONTAINS CONFIDENTIAL AND TRADE SECRET INFORMATION. THIS SHEET MAY NOT BE TRANSFERED FROM THE CUSTODY OF THE COMPETENT DIVISION OF R&D DEPARTMENT EXCEPT AS AUTHORIZED BY COMPAL ELECTRONICS, INC. NEITHER THIS SHEET NOR THE INFORMATION IT CONTAINS

Compal Electronics, Inc.			
Title	HDD & CDROM Connector		
Size	Document Number	Rev	
	Sakhir LA-2491	1.0	
Date: 星期一, 十二月 06, 2004	Sheet 22 of 51		

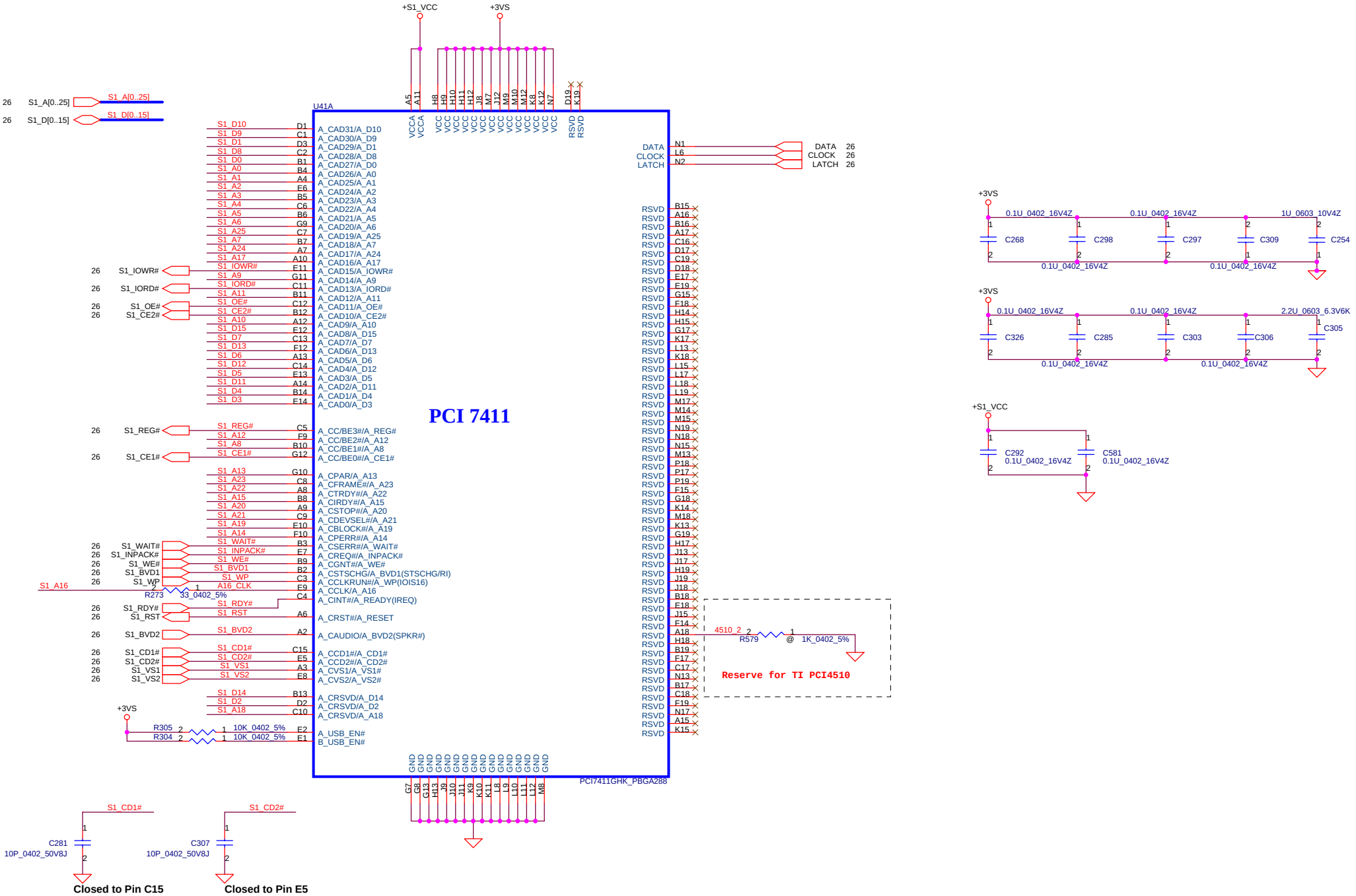

THIS SHEET OF ENGINEERING DRAWING IS THE PROPRIETARY PROPERTY OF COMPAL ELECTRONICS, INC. AND CONTAINS CONFIDENTIAL AND TRADE SECRET INFORMATION. THIS SHEET MAY NOT BE TRANSFERED FROM THE CUSTODY OF THE COMPETENT DIVISION OF R&D DEPARTMENT EXCEPT AS AUTHORIZED BY COMPAL ELECTRONICS, INC. NEITHER THIS SHEET NOR THE INFORMATION IT CONTAINS MAY BE USED BY OR DISCLOSED TO ANY THIRD PARTY WITHOUT PRIOR WRITTEN CONSENT OF COMPAL ELECTRONICS, INC.

Compal Electronics, Inc.

Title	PCI7421(1/2)
Size / Document Number	Sakhir LA-2491
Rev	1.0
Date:	星期一, 十二月 06, 2004
Sheet	23 of 51

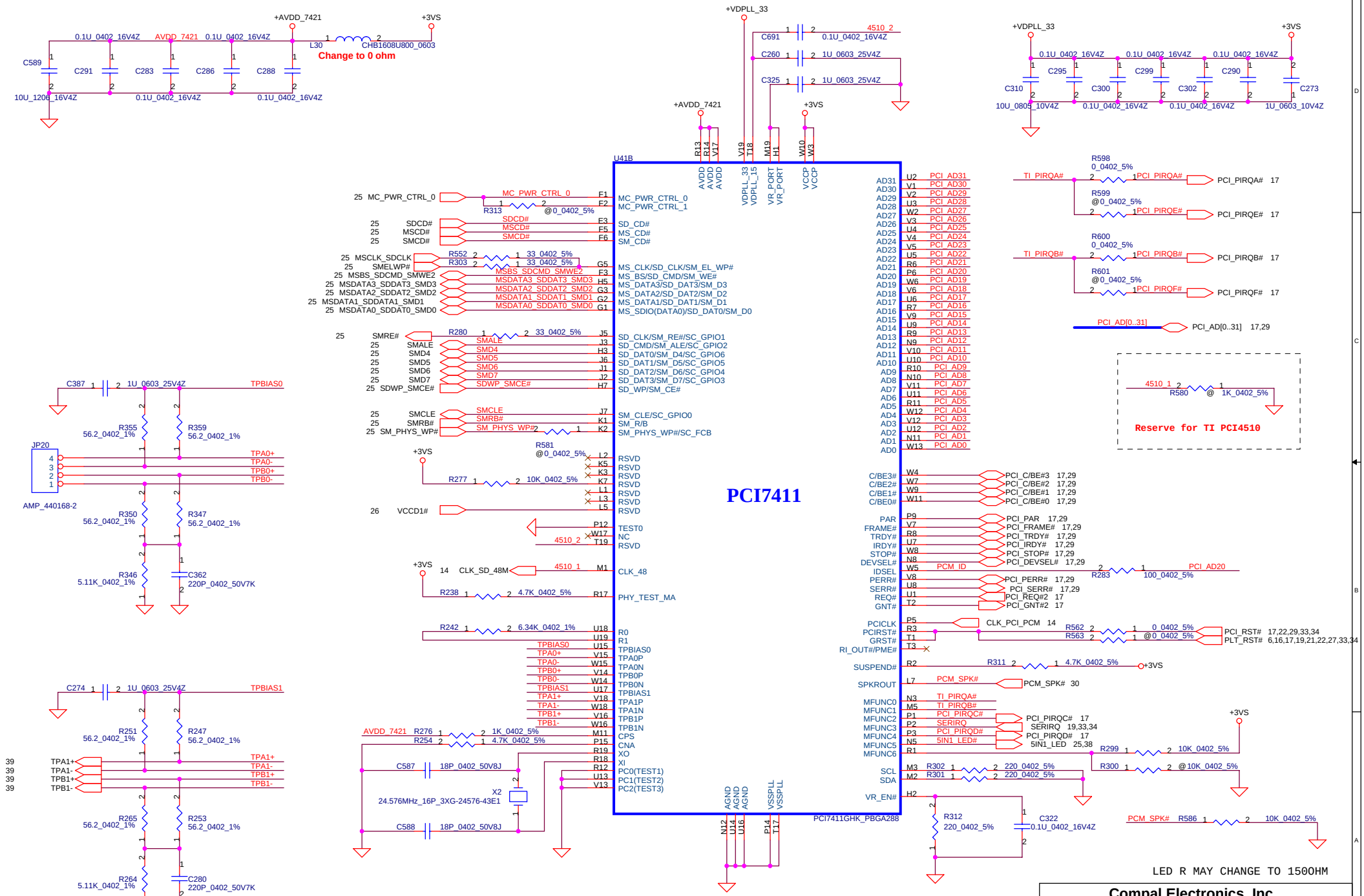
PCI7411
U41B
PCI7411GHK_PBGA288
Change to 0 ohm
Reserve for TI PCI4510
LED R MAY CHANGE TO 150OHM
+AVDD_7421
+3VS
+VDPLL_33
AVDD_7421
L30
CHB1608U800_0603
C589
C291
C283
C286
C288
10U_1206_16V4Z
0.1U_0402_16V4Z
C691
C260
C325
1U_0603_25V4Z
C295
C299
C290
C310
C300
C302
C273
10U_0805_10V4Z
1U_0603_10V4Z
R313
@0_0402_5%
R552
R303
33_0402_5%
R280
R581
R277
10K_0402_5%
R238
4.7K_0402_5%
R242
6.34K_0402_1%
R276
1K_0402_5%
R254
4.7K_0402_5%
C587
18P_0402_50V8J
X2
24.576MHz_16P_3XG-24576-43E1
C588
R598
R599
R600
R601
R580
1K_0402_5%
R283
100_0402_5%
R562
R563
R311
4.7K_0402_5%
R299
R300
@10K_0402_5%
R302
R301
220_0402_5%
R312
C322
0.1U_0402_16V4Z
R586
C387
C274
JP20
AMP_440168-2
R355
R359
R350
R347
R346
C362
220P_0402_50V7K
R251
R247
R265
R253
R264
C280
TPBIAS0
TPBIAS1
TPA0+
TPA0-
TPB0+
TPB0-
TPA1+
TPA1-
TPB1+
TPB1-
MC_PWR_CTRL_0
SDCD#
MSCD#
SMCD#
MSCLK_SDCLK
SMELWP#
MSBS_SDCMD_SMWE2
MSDATA3_SDDAT3_SMD3
MSDATA2_SDDAT2_SMD2
MSDATA1_SDDAT1_SMD1
MSDATA0_SDDAT0_SMD0
SMRE#
SMALE
SMD4
SMD5
SMD6
SMD7
SDWP_SMCE#
SMCLE
SMRB#
SM_PHYS_WP#
VCCD1#
CLK_SD_48M
TI_PIRQA#
TI_PIRQB#
PCI_AD[0..31]
PCI_C/BE#3
PCI_C/BE#2
PCI_C/BE#1
PCI_C/BE#0
PCI_PAR
PCI_FRAME#
PCI_TRDY#
PCI_IRDY#
PCI_STOP#
PCI_DEVSEL#
PCI_PERR#
PCI_SERR#
PCI_REQ#2
PCI_GNT#2
CLK_PCI_PCM
PCI_RST#
PLT_RST#
PCM_SPK#
SERIRQ
5IN1_LED
PCI_PIRQA#
PCI_PIRQE#
PCI_PIRQB#
PCI_PIRQF#
PCI_PIRQC#
PCI_PIRQD#
MC_PWR_CTRL_1
SM_CE#
SM_CLE/SC_GPIO0
SM_R/B
SM_PHYS_WP#/SC_FCB
RSVD
TEST0
NC
CLK_48
PHY_TEST_MA
R0
R1
CPS
CNA
XO
XI
PC0(TEST1)
PC1(TEST2)
PC2(TEST3)
SUSPEND#
SPKROUT
MFUNC0
MFUNC1
MFUNC2
MFUNC3
MFUNC4
MFUNC5
MFUNC6
SCL
SDA
VR_EN#
AGND
VSSPLL
VDPLL_33
VDPLL_15
VR_PORT
VCCP
Compal Electronics, Inc.
Title
PCI7421(2/2)
Size
Document Number
Sakhir LA-2491
Rev
1.0
Date:
星期一, 十二月 06, 2004
Sheet
24
of
51
THIS SHEET OF ENGINEERING DRAWING IS THE PROPRIETARY PROPERTY OF COMPAL ELECTRONICS, INC. AND CONTAINS CONFIDENTIAL AND TRADE SECRET INFORMATION. THIS SHEET MAY NOT BE TRANSFERED FROM THE CUSTODY OF THE COMPETENT DIVISION OF R&D DEPARTMENT EXCEPT AS AUTHORIZED BY COMPAL ELECTRONICS, INC. NEITHER THIS SHEET NOR THE INFORMATION IT CONTAINS MAY BE USED BY OR DISCLOSED TO ANY THIRD PARTY WITHOUT PRIOR WRITTEN CONSENT OF COMPAL ELECTRONICS, INC.

5 in 1 CardReader Conn.

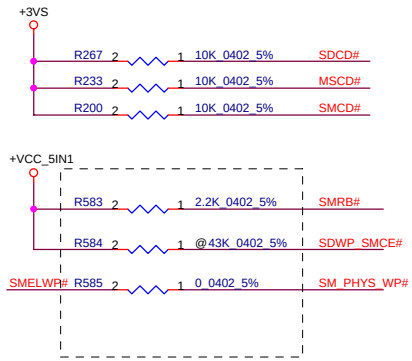

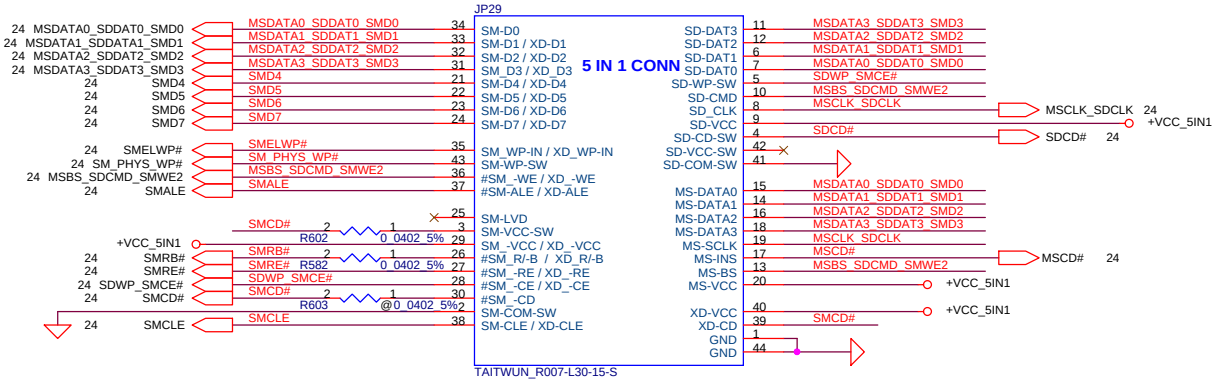

TI Workaround need check

SD/XD/MS/SM PWR SWITCH

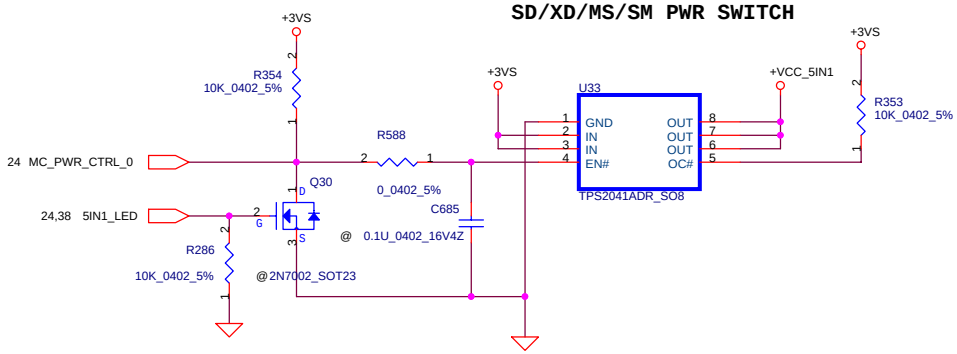

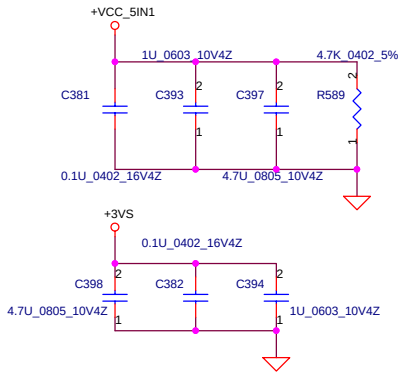

THIS SHEET OF ENGINEERING DRAWING IS THE PROPRIETARY PROPERTY OF COMPAL ELECTRONICS, INC. AND CONTAINS CONFIDENTIAL AND TRADE SECRET INFORMATION. THIS SHEET MAY NOT BE TRANSFERED FROM THE CUSTODY OF THE COMPETENT DIVISION OF R&D DEPARTMENT EXCEPT AS AUTHORIZED BY COMPAL ELECTRONICS, INC. NEITHER THIS SHEET NOR THE INFORMATION IT CONTAINS MAY BE USED BY OR DISCLOSED TO ANY THIRD PARTY WITHOUT PRIOR WRITTEN CONSENT OF COMPAL ELECTRONICS, INC.

Compal Electronics, Inc.

Title	5 IN 1 Stocket
Size / Document Number	Sakhir LA-2491
Rev	1.0
Date:	星期一, 十二月 06, 2004
Sheet	25 of 51

Power Switch for PCMCIA

For 7411

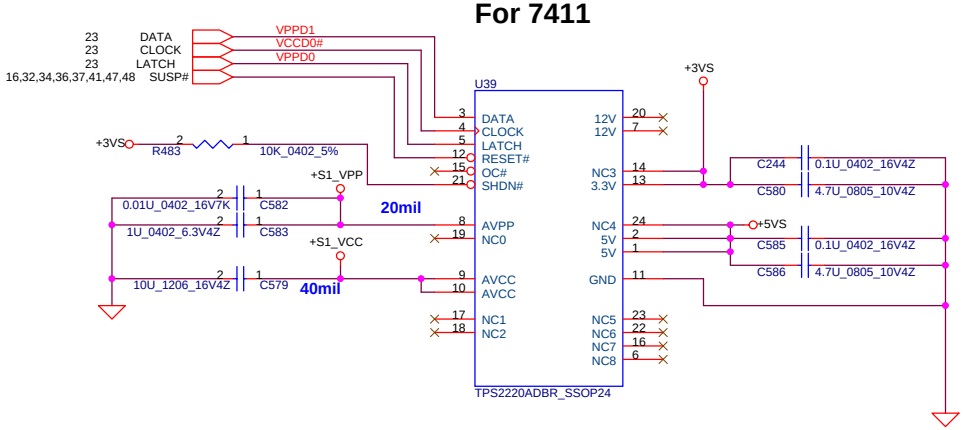

For 4510

use U4 footprint

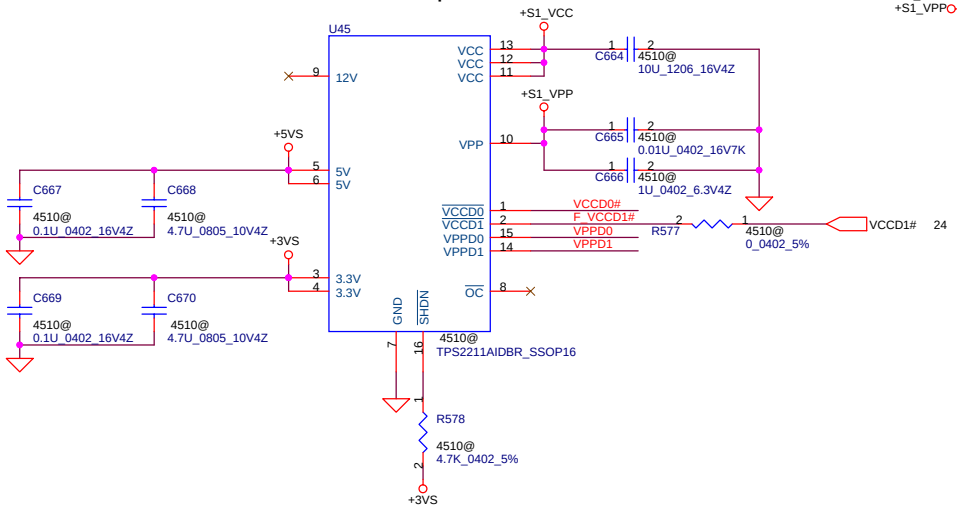

CardBus Socket

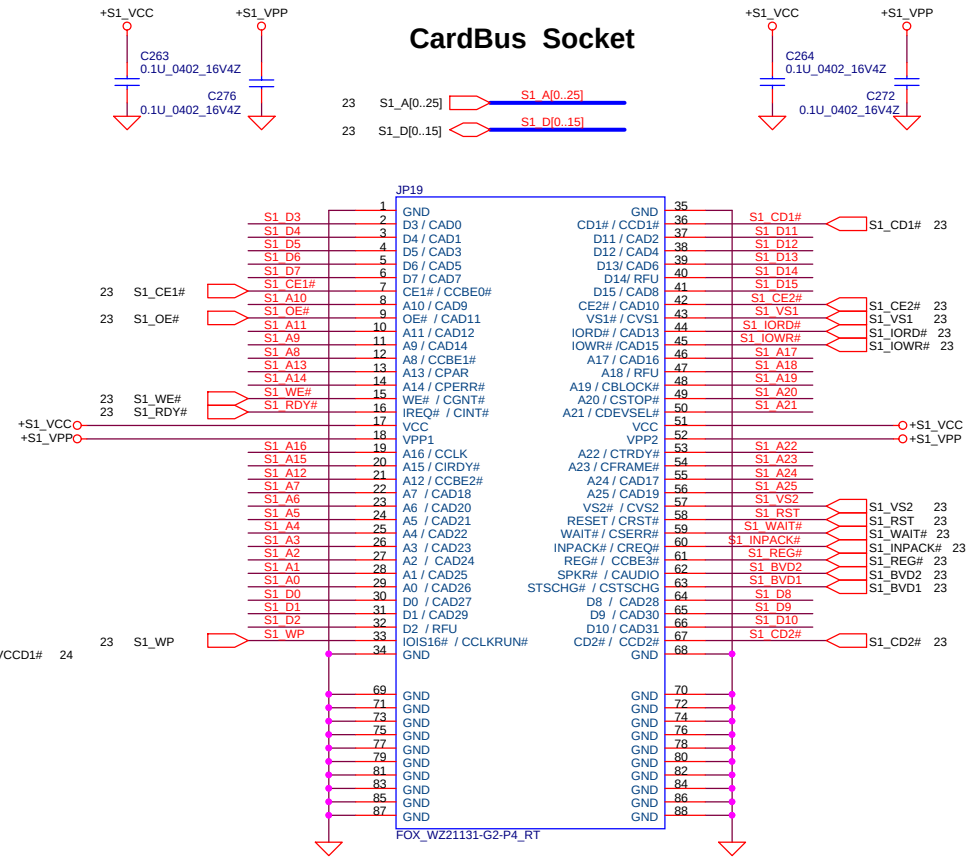

THIS SHEET OF ENGINEERING DRAWING IS THE PROPRIETARY PROPERTY OF COMPAL ELECTRONICS, INC. AND CONTAINS CONFIDENTIAL AND TRADE SECRET INFORMATION. THIS SHEET MAY NOT BE TRANSFERED FROM THE CUSTODY OF THE COMPETENT DIVISION OF R&D DEPARTMENT EXCEPT AS AUTHORIZED BY COMPAL ELECTRONICS, INC. NEITHER THIS SHEET NOR THE INFORMATION IT CONTAINS MAY BE USED BY OR DISCLOSED TO ANY THIRD PARTY WITHOUT PRIOR WRITTEN CONSENT OF COMPAL ELECTRONICS, INC.

Compal Electronics, Inc.	
Title	CardBUS Socket
Size	Document Number: Sakhir LA-2491
Rev	1.0
Date: 星期一, 十二月 06, 2004	Sheet 26 of 51

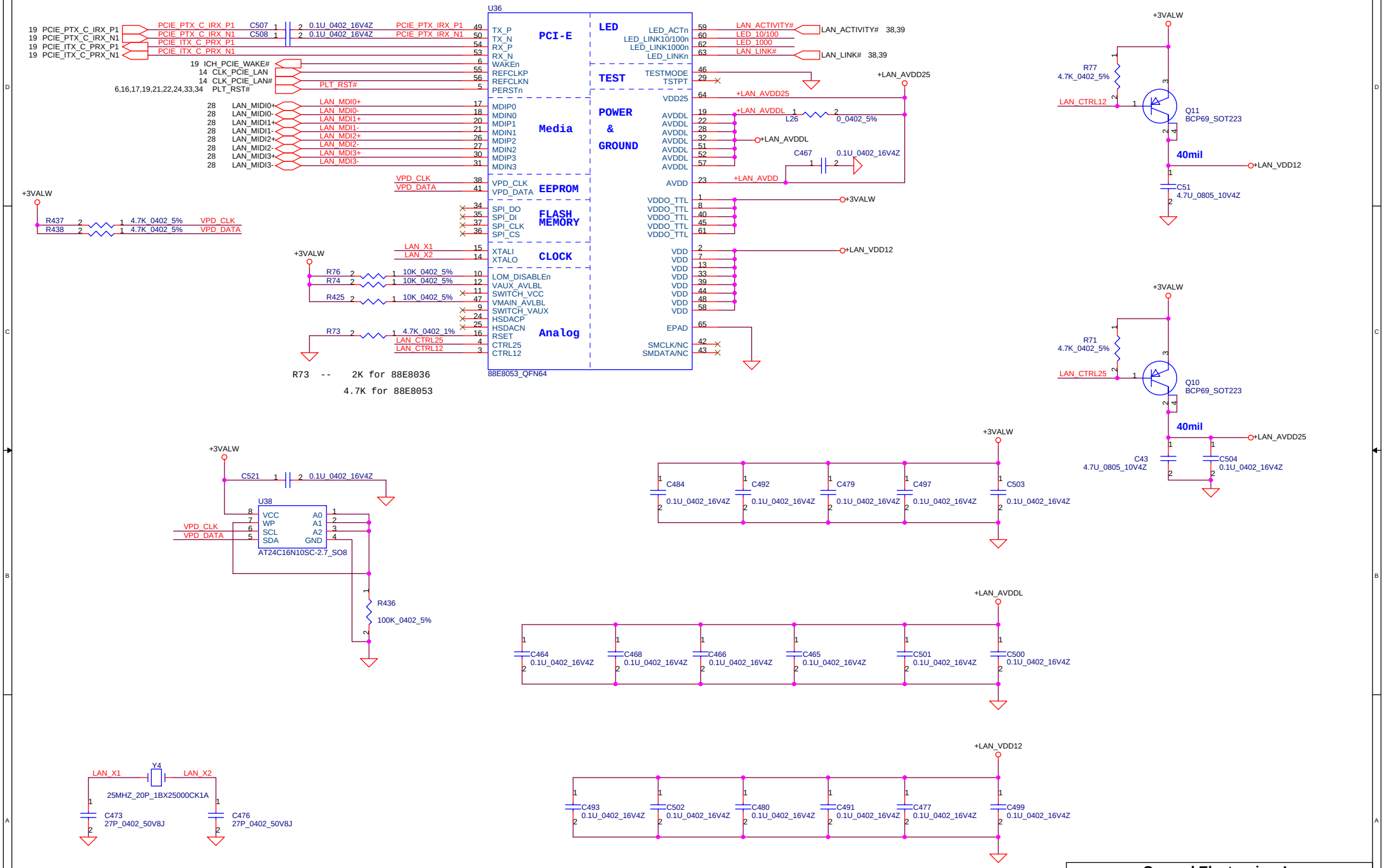

THIS SHEET OF ENGINEERING DRAWING IS THE PROPRIETARY PROPERTY OF COMPAL ELECTRONICS, INC. AND CONTAINS CONFIDENTIAL AND TRADE SECRET INFORMATION. THIS SHEET MAY NOT BE TRANSFERED FROM THE CUSTODY OF THE COMPETENT DIVISION OF R&D DEPARTMENT EXCEPT AS AUTHORIZED BY COMPAL ELECTRONICS, INC. NEITHER THIS SHEET NOR THE INFORMATION IT CONTAINS MAY BE USED BY OR DISCLOSED TO ANY THIRD PARTY WITHOUT PRIOR WRITTEN CONSENT OF COMPAL ELECTRONICS, INC.

Compal Electronics, Inc.

Title	LAN Marvell 88E8053
Size	C
Document Number	Sakhir LA-2491
Rev	1.0
Date:	星期一, 十二月 06, 2004
Sheet	27 of 51

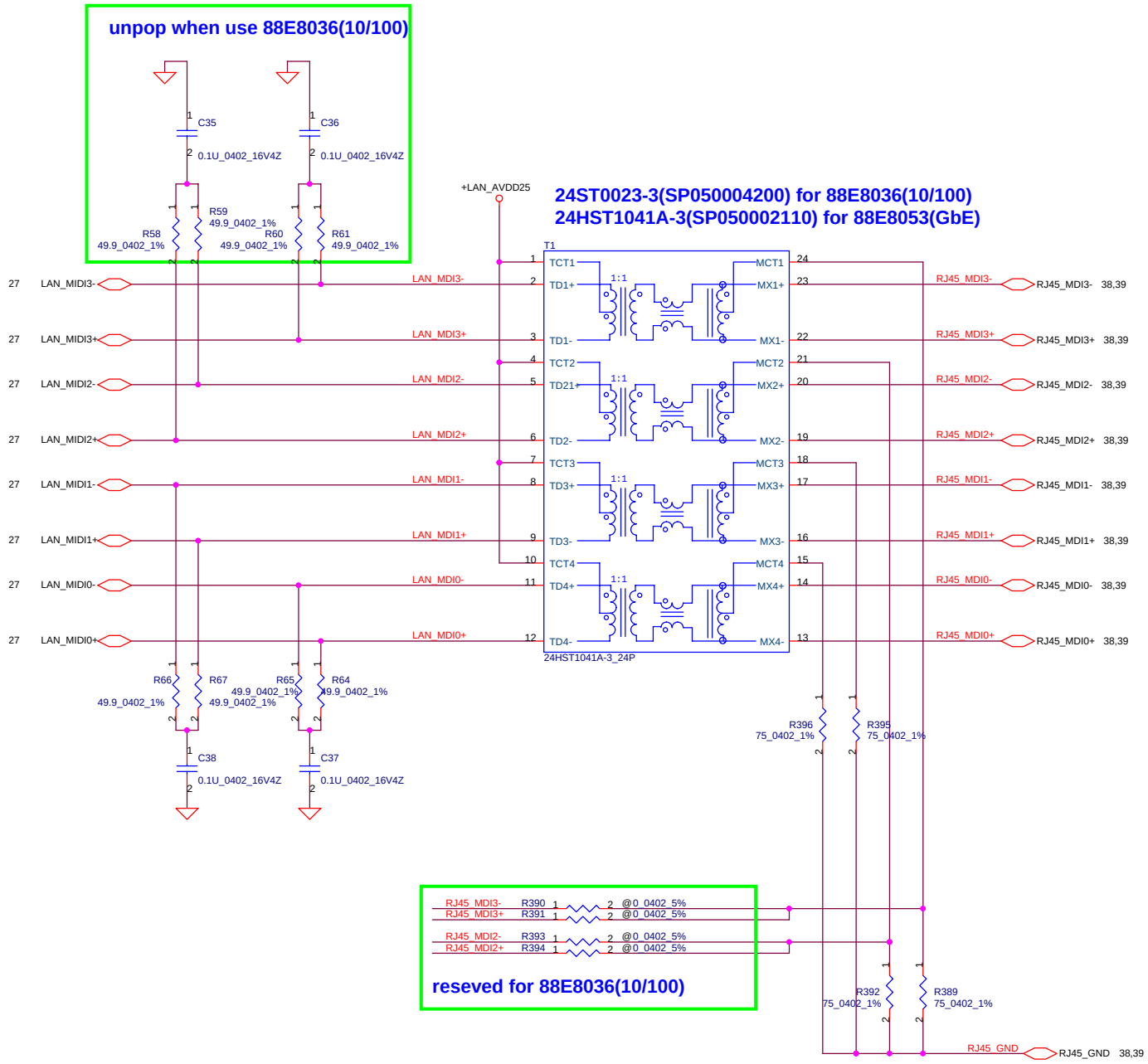

THIS SHEET OF ENGINEERING DRAWING IS THE PROPRIETARY PROPERTY OF COMPAL ELECTRONICS, INC. AND CONTAINS CONFIDENTIAL AND TRADE SECRET INFORMATION. THIS SHEET MAY NOT BE TRANSFERED FROM THE CUSTODY OF THE COMPETENT DIVISION OF R&D DEPARTMENT EXCEPT AS AUTHORIZED BY COMPAL ELECTRONICS, INC. NEITHER THIS SHEET NOR THE INFORMATION IT CONTAINS MAY BE USED BY OR DISCLOSED TO ANY THIRD PARTY WITHOUT PRIOR WRITTEN CONSENT OF COMPAL ELECTRONICS, INC.

Compal Electronics, Inc.

Title	LAN Conn.
Size / Document Number	Sakhir LA-2491
Rev	1.0
Date:	星期一, 十二月 06, 2004
Sheet	28 of 51

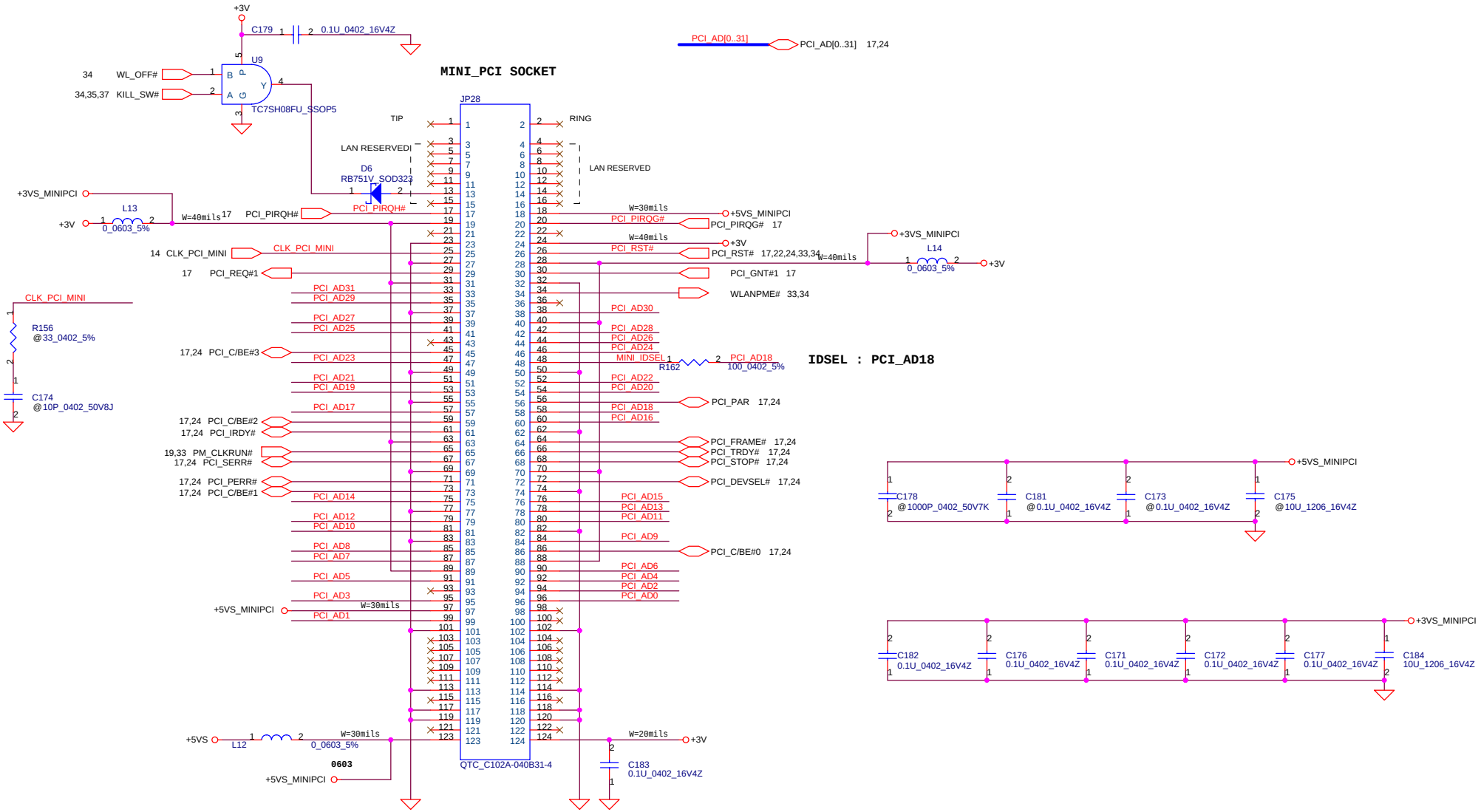

Compal Electronics, Inc.	
Title	Mini PCI Slot
Document Number	Sakhir LA-2491
Rev	1.0
Date: 星期一, 十二月 06, 2004	Sheet 29 of 51

THIS SHEET OF ENGINEERING DRAWING IS THE PROPRIETARY PROPERTY OF COMPAL ELECTRONICS, INC. AND CONTAINS CONFIDENTIAL AND TRADE SECRET INFORMATION. THIS SHEET MAY NOT BE TRANSFERED FROM THE CUSTODY OF THE COMPETENT DIVISION OF R&D DEPARTMENT EXCEPT AS AUTHORIZED BY COMPAL ELECTRONICS, INC. NEITHER THIS SHEET NOR THE INFORMATION IT CONTAINS MAY BE USED BY OR DISCLOSED TO ANY THIRD PARTY WITHOUT PRIOR WRITTEN CONSENT OF COMPAL ELECTRONICS, INC.

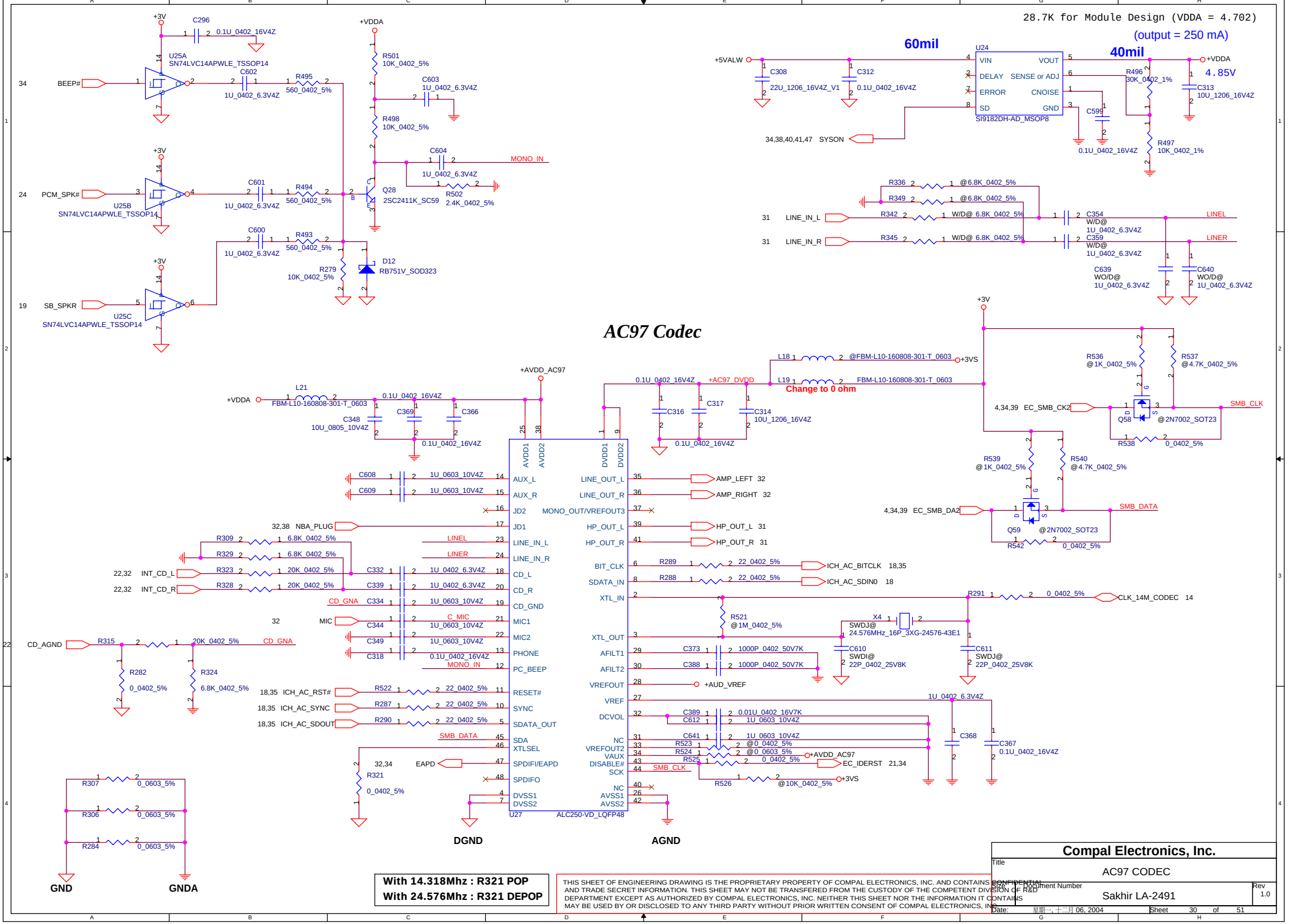

THIS SHEET OF ENGINEERING DRAWING IS THE PROPRIETARY PROPERTY OF COMPAL ELECTRONICS, INC. AND CONTAINS CONFIDENTIAL AND TRADE SECRET INFORMATION. THIS SHEET MAY NOT BE TRANSFERED FROM THE CUSTODY OF THE COMPETENT DIVISION OF R&D DEPARTMENT EXCEPT AS AUTHORIZED BY COMPAL ELECTRONICS, INC. NEITHER THIS SHEET NOR THE INFORMATION IT CONTAINS MAY BE USED BY OR DISCLOSED TO ANY THIRD PARTY WITHOUT PRIOR WRITTEN CONSENT OF COMPAL ELECTRONICS, INC.

Compal Electronics, Inc.

Title: AC97 CODEC

Document Number: Sakhir LA-2491

Rev: 1.0

Date: 星期一, 十二月 06, 2004

Sheet 30 of 51

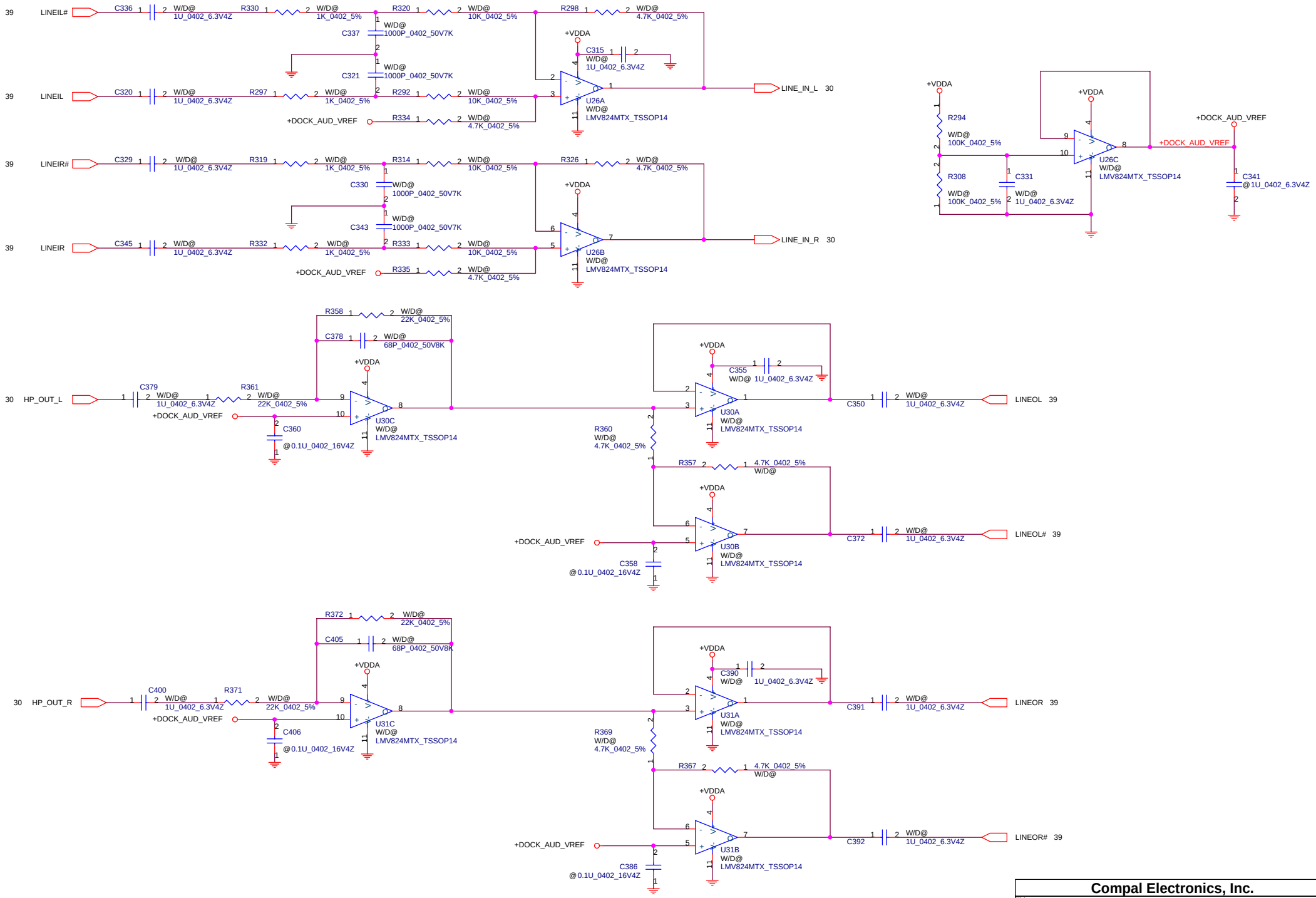

PROPRIETARY NOTE THIS SHEET OF ENGINEERING DRAWING IS THE PROPRIETARY PROPERTY OF COMPAL ELECTRONICS, INC. AND CONTAINS CONFIDENTIAL AND TRADE SECRET INFORMATION. THIS SHEET MAY NOT BE TRANSFERRED FROM THE CUSTODY OF THE COMPETENT DIVISION OF R&D DEPARTMENT EXCEPT AS AUTHORIZED BY COMPAL ELECTRONICS, INC. NEITHER THIS SHEET NOR THE INFORMATION IT CONTAINS MAY BE USED BY OR DISCLOSED TO ANY THIRD PARTY WITHOUT PRIOR WRITTEN CONSENT OF COMPAL ELECTRONICS, INC.

Compal Electronics, Inc.

Title	Docking Audio
Size	Document Number: Sakhir LA-2491
Rev	1.0
Date:	星期一, 十二月 06, 2004
Sheet	31 of 51

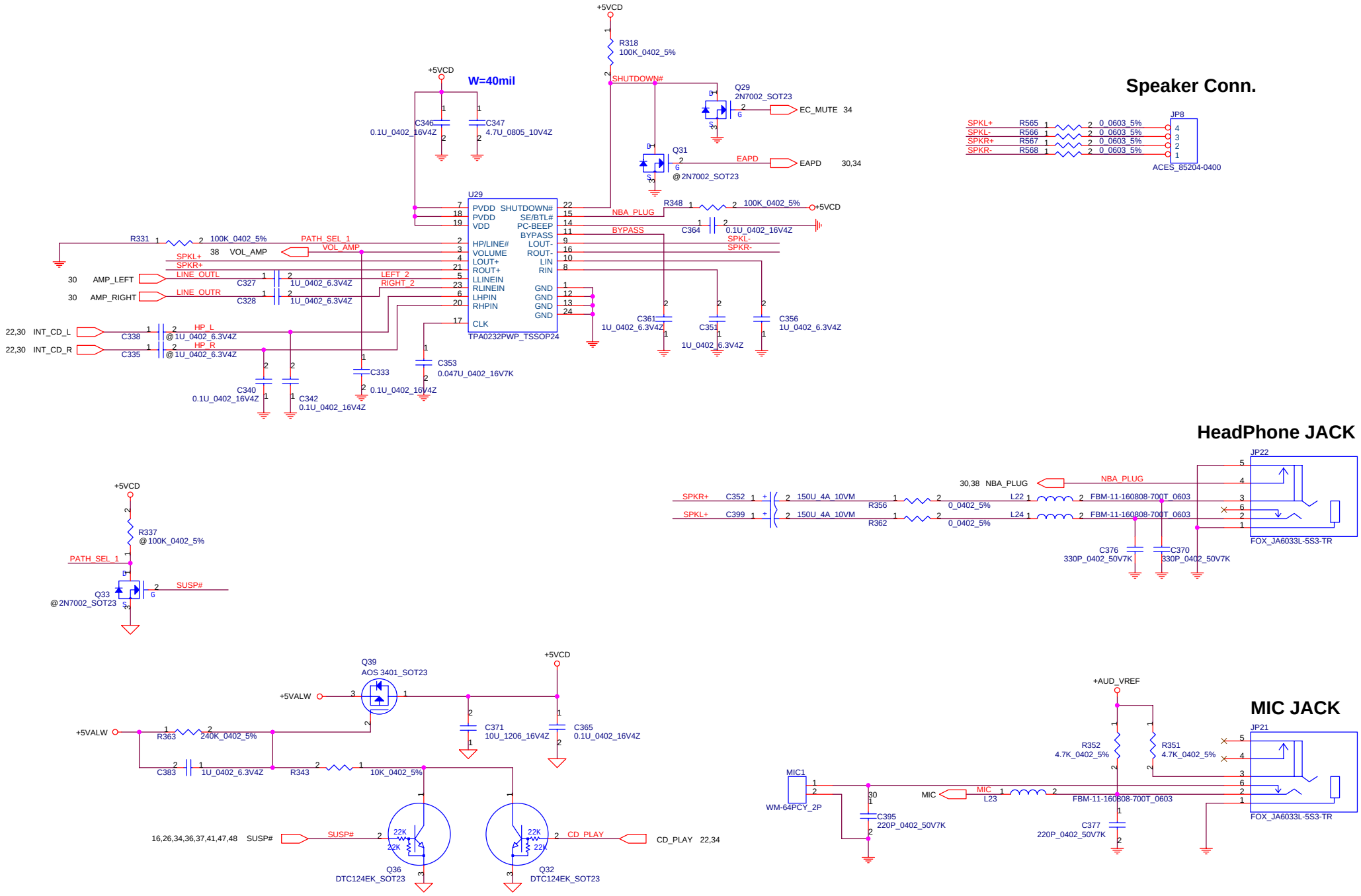

THIS SHEET OF ENGINEERING DRAWING IS THE PROPRIETARY PROPERTY OF COMPAL ELECTRONICS, INC. AND CONTAINS CONFIDENTIAL AND TRADE SECRET INFORMATION. THIS SHEET MAY NOT BE TRANSFERED FROM THE CUSTODY OF THE COMPETENT DIVISION OF R&D DEPARTMENT EXCEPT AS AUTHORIZED BY COMPAL ELECTRONICS, INC. NEITHER THIS SHEET NOR THE INFORMATION IT CONTAINS MAY BE USED BY OR DISCLOSED TO ANY THIRD PARTY WITHOUT PRIOR WRITTEN CONSENT OF COMPAL ELECTRONICS, INC.

Compal Electronics, Inc.

Title	AMP & Audio Jack
Size	C
Document Number	Sakhir LA-2491
Rev	1.0
Date:	星期一, 十二月 06, 2004
Sheet	32 of 51

SUPER I/O SMsC LPC47N217

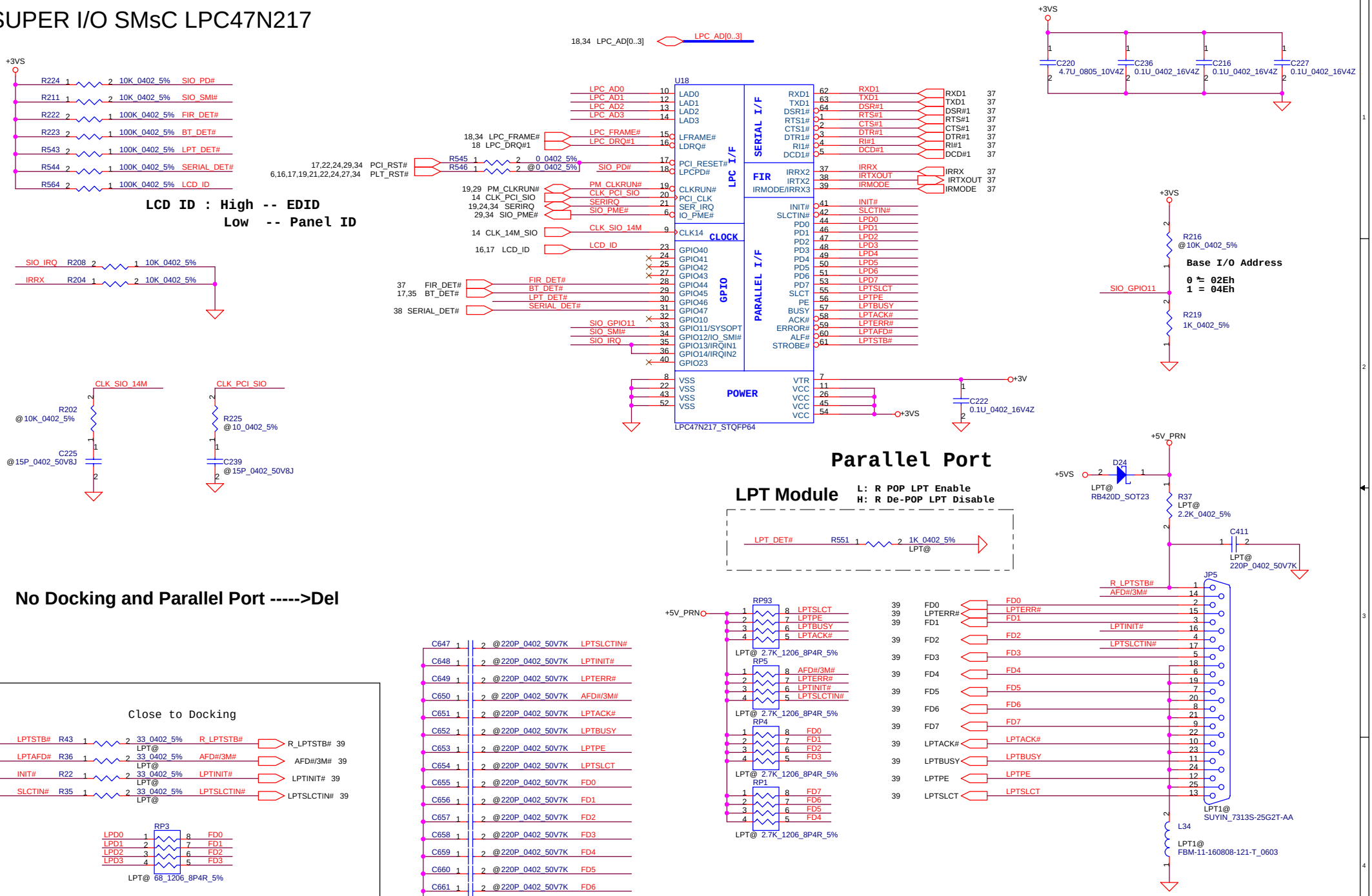

THIS SHEET OF ENGINEERING DRAWING IS THE PROPRIETARY PROPERTY OF COMPAL ELECTRONICS, INC. AND CONTAINS CONFIDENTIAL AND TRADE SECRET INFORMATION. THIS SHEET MAY NOT BE TRANSFERED FROM THE CUSTODY OF THE COMPETENT DIVISION OF R&D DEPARTMENT EXCEPT AS AUTHORIZED BY COMPAL ELECTRONICS, INC. NEITHER THIS SHEET NOR THE INFORMATION IT CONTAINS MAY BE USED BY OR DISCLOSED TO ANY THIRD PARTY WITHOUT PRIOR WRITTEN CONSENT OF COMPAL ELECTRONICS, INC.

Compal Electronics, Ltd.	
Title	LPC-Super I/O 217
Size	Document Number: Sakhir LA-2491
Rev	1.0
Date: 星期一, 十二月 06, 2004	Sheet 33 of 51

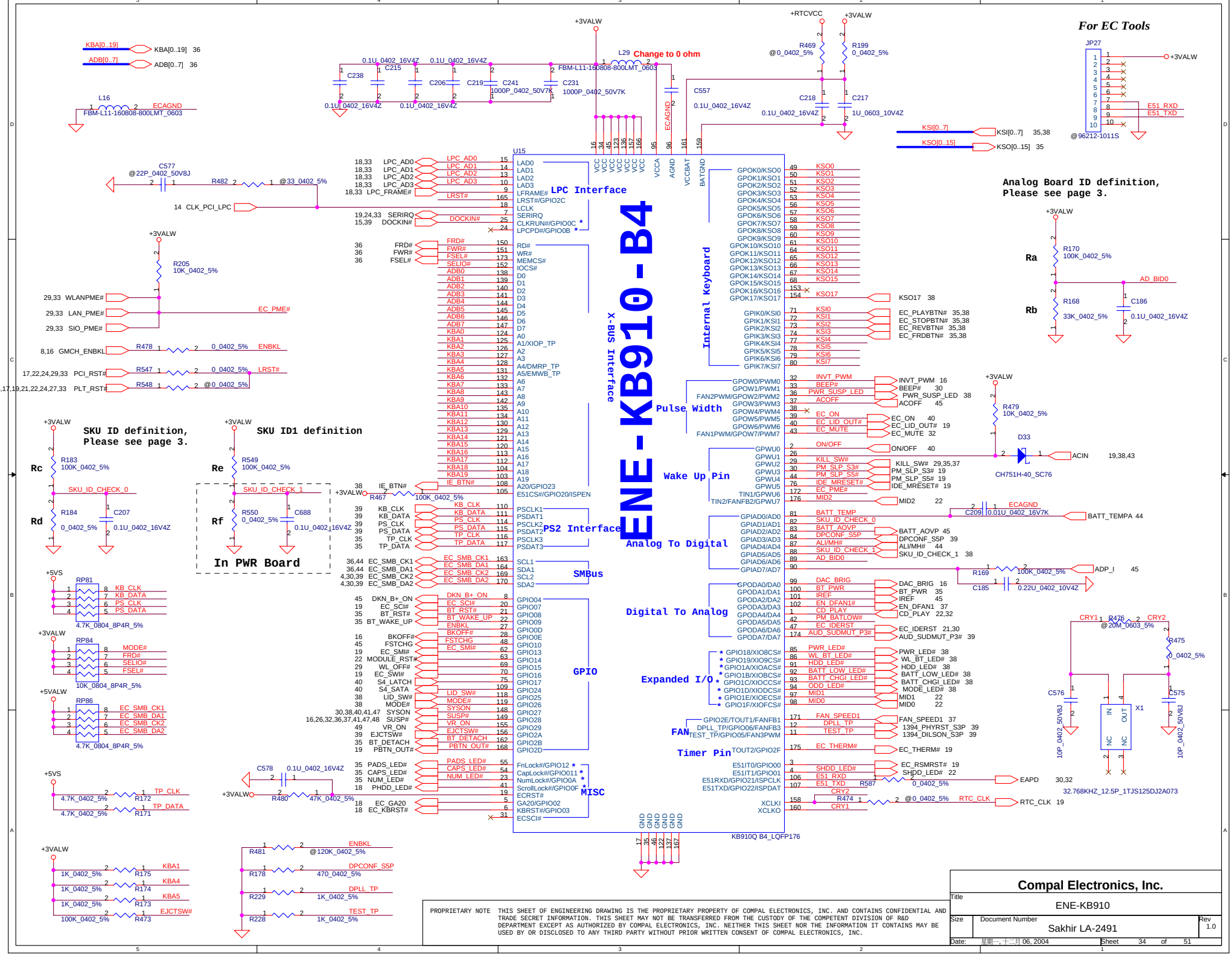

PROPRIETARY NOTE THIS SHEET OF ENGINEERING DRAWING IS THE PROPRIETARY PROPERTY OF COMPAL ELECTRONICS, INC. AND CONTAINS CONFIDENTIAL AND TRADE SECRET INFORMATION. THIS SHEET MAY NOT BE TRANSFERRED FROM THE CUSTODY OF THE COMPETENT DIVISION OF R&D DEPARTMENT EXCEPT AS AUTHORIZED BY COMPAL ELECTRONICS, INC. NEITHER THIS SHEET NOR THE INFORMATION IT CONTAINS MAY BE USED BY OR DISCLOSED TO ANY THIRD PARTY WITHOUT PRIOR WRITTEN CONSENT OF COMPAL ELECTRONICS, INC.

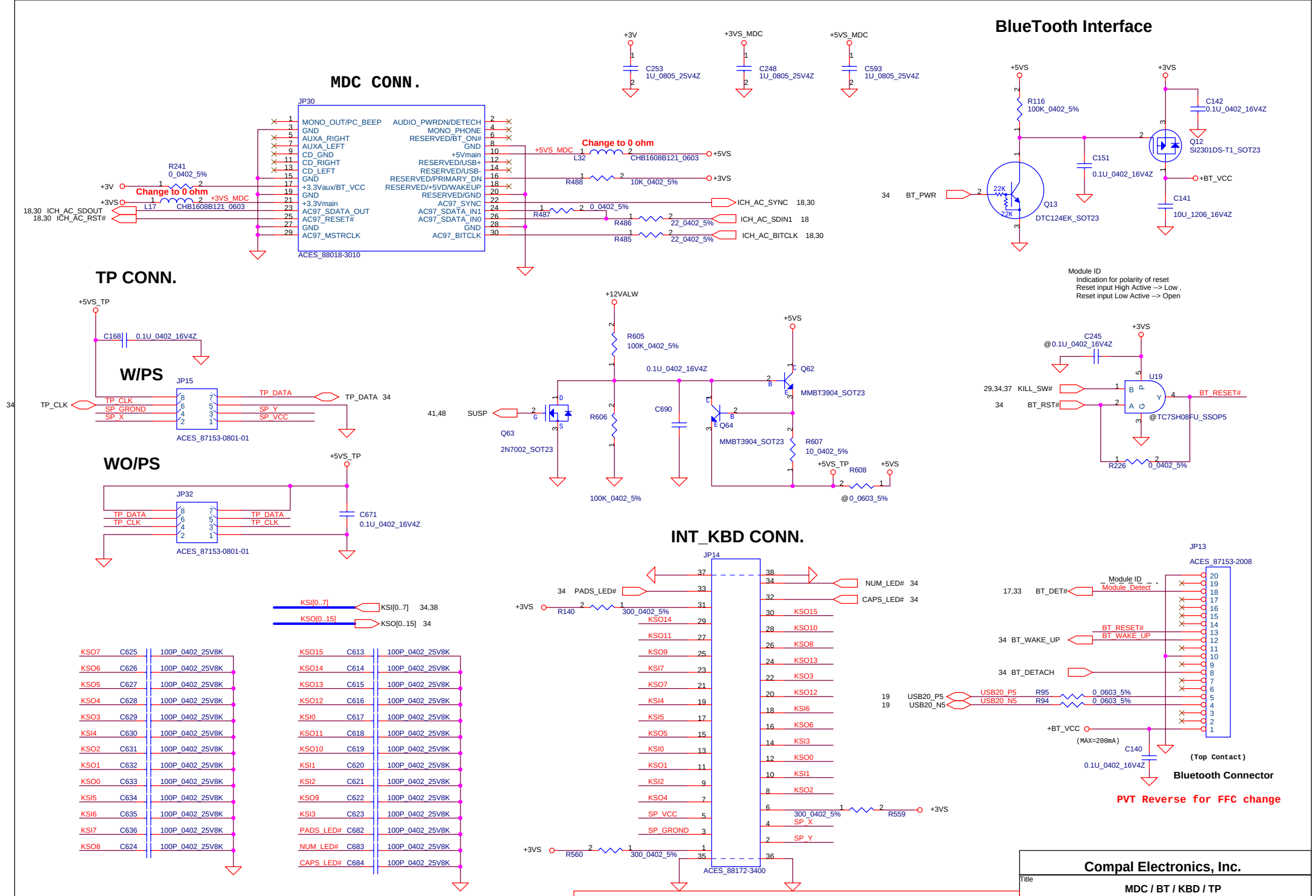

THIS SHEET OF ENGINEERING DRAWING IS THE PROPRIETARY PROPERTY OF COMPAL ELECTRONICS, INC. AND CONTAINS CONFIDENTIAL AND TRADE SECRET INFORMATION. THIS SHEET MAY NOT BE TRANSFERED FROM THE CUSTODY OF THE COMPETENT DIVISION OF R&D DEPARTMENT EXCEPT AS AUTHORIZED BY COMPAL ELECTRONICS, INC. NEITHER THIS SHEET NOR THE INFORMATION IT CONTAINS MAY BE USED BY OR DISCLOSED TO ANY THIRD PARTY WITHOUT PRIOR WRITTEN CONSENT OF COMPAL ELECTRONICS, INC.

Compal Electronics, Inc.

Title: MDC / BT / KBD / TP

Size: A3 | Document Number: Sakhir LA-2491 | Rev: 1.0

Date: 星期一, 十二月 06, 2004 | Sheet 35 of 51

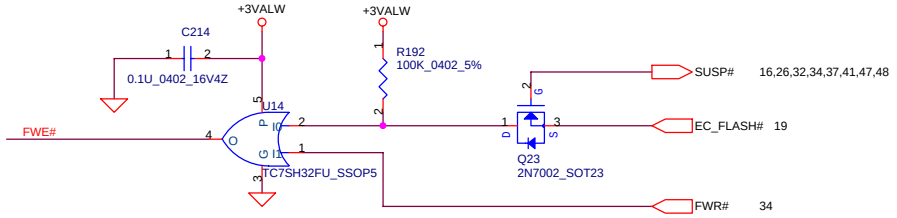

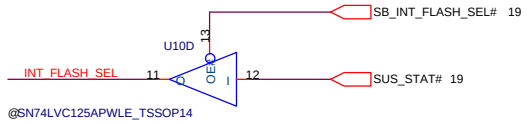

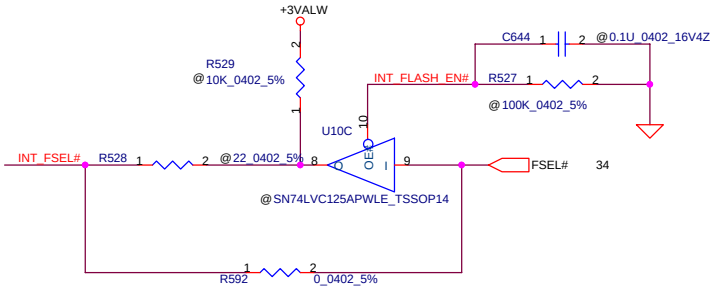

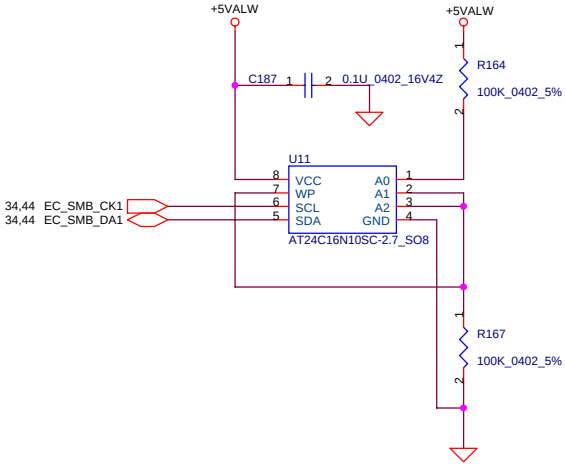

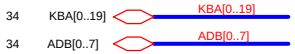

1MB Flash ROM

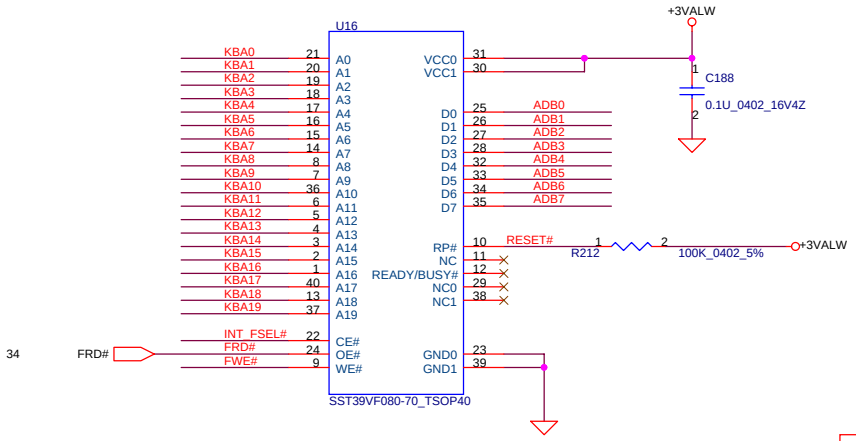

1MB ROM Socket

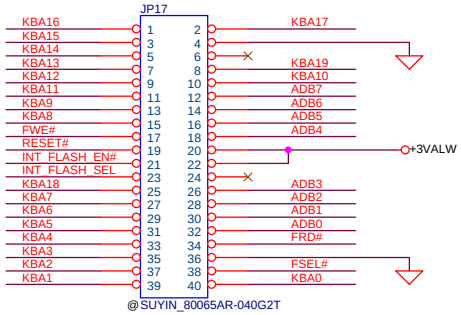

THIS SHEET OF ENGINEERING DRAWING IS THE PROPRIETARY PROPERTY OF COMPAL ELECTRONICS, INC. AND CONTAINS CONFIDENTIAL AND TRADE SECRET INFORMATION. THIS SHEET MAY NOT BE TRANSFERED FROM THE CUSTODY OF THE COMPETENT DIVISION OF R&D DEPARTMENT EXCEPT AS AUTHORIZED BY COMPAL ELECTRONICS, INC. NEITHER THIS SHEET NOR THE INFORMATION IT CONTAINS MAY BE USED BY OR DISCLOSED TO ANY THIRD PARTY WITHOUT PRIOR WRITTEN CONSENT OF COMPAL ELECTRONICS, INC.

Compal Electronics, Inc.

Title: BIOS & EXT. I/O PORT

Size: A3 | Document Number: Sakhir LA-2491 | Rev: 1.0

Date: 星期一, 十二月 06, 2004 | Sheet 36 of 51

Kill SWITCH

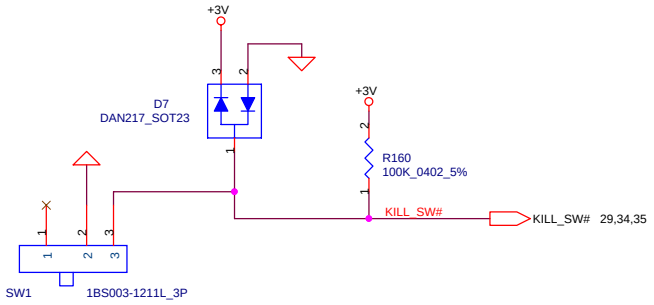

Close to Docking

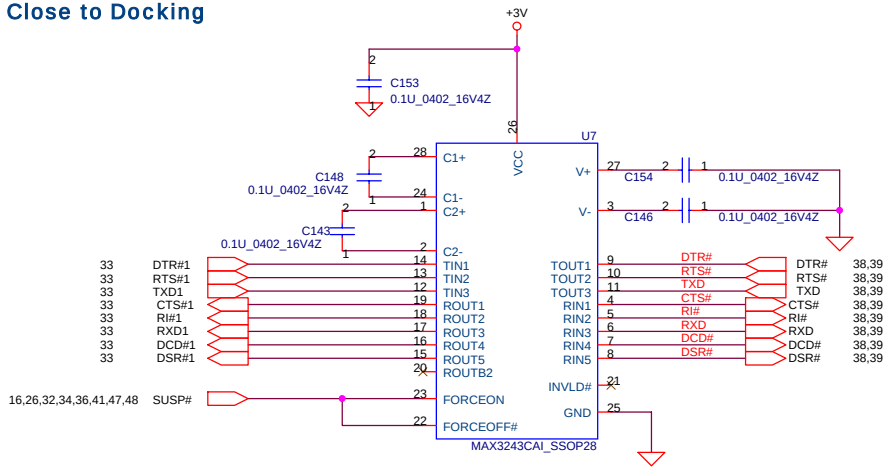

No Docking and Serial Port ----->Del

FAN Conn

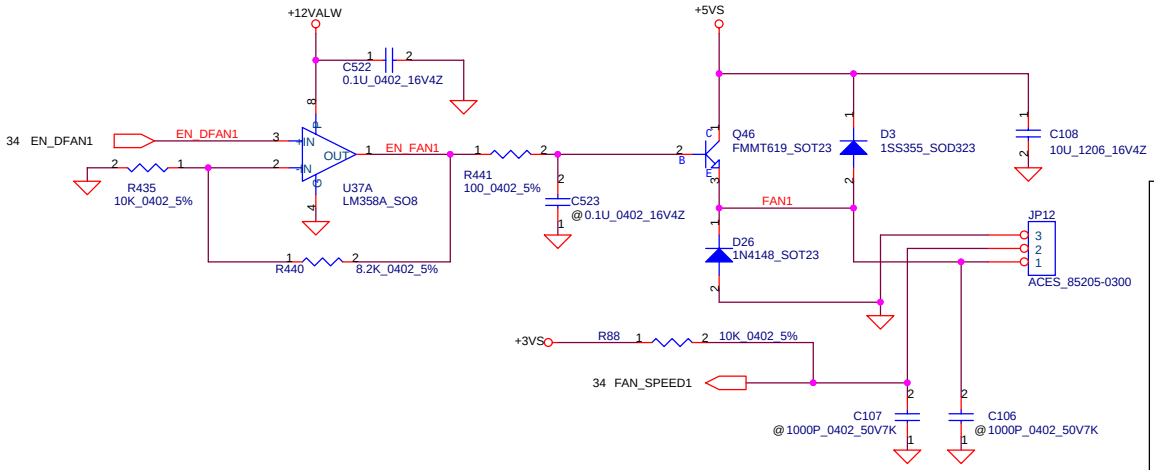

FIR Module

L: R POP; FIR Enable
H: R De-POPFIR Disable

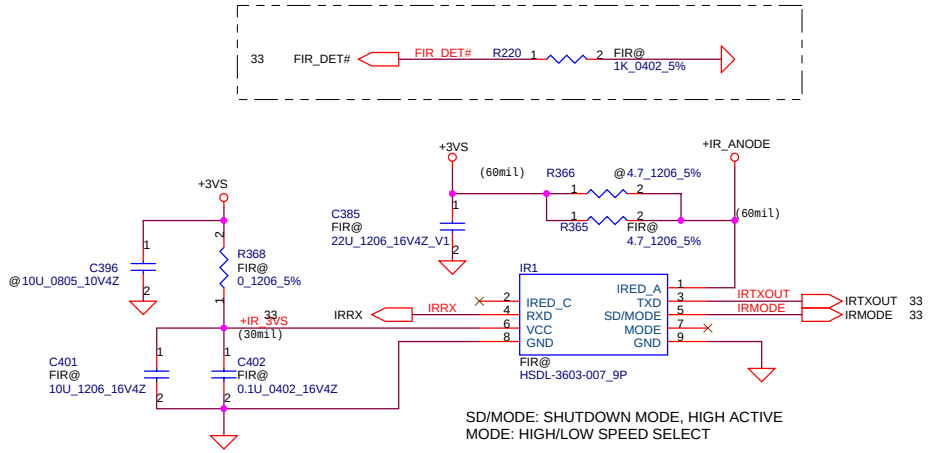

THIS SHEET OF ENGINEERING DRAWING IS THE PROPRIETARY PROPERTY OF COMPAL ELECTRONICS, INC. AND CONTAINS CONFIDENTIAL AND TRADE SECRET INFORMATION. THIS SHEET MAY NOT BE TRANSFERED FROM THE CUSTODY OF THE COMPETENT DIVISION OF R&D DEPARTMENT EXCEPT AS AUTHORIZED BY COMPAL ELECTRONICS, INC. NEITHER THIS SHEET NOR THE INFORMATION IT CONTAINS MAY BE USED BY OR DISCLOSED TO ANY THIRD PARTY WITHOUT PRIOR WRITTEN CONSENT OF COMPAL ELECTRONICS, INC.

Compal Electronics, Inc.		
Title: FAN1 / FIR / Kill		
Size	Document Number: Sakhir LA-2491	Rev 1.0
Date: 星期一, 十二月 06, 2004	Sheet 37 of 51	

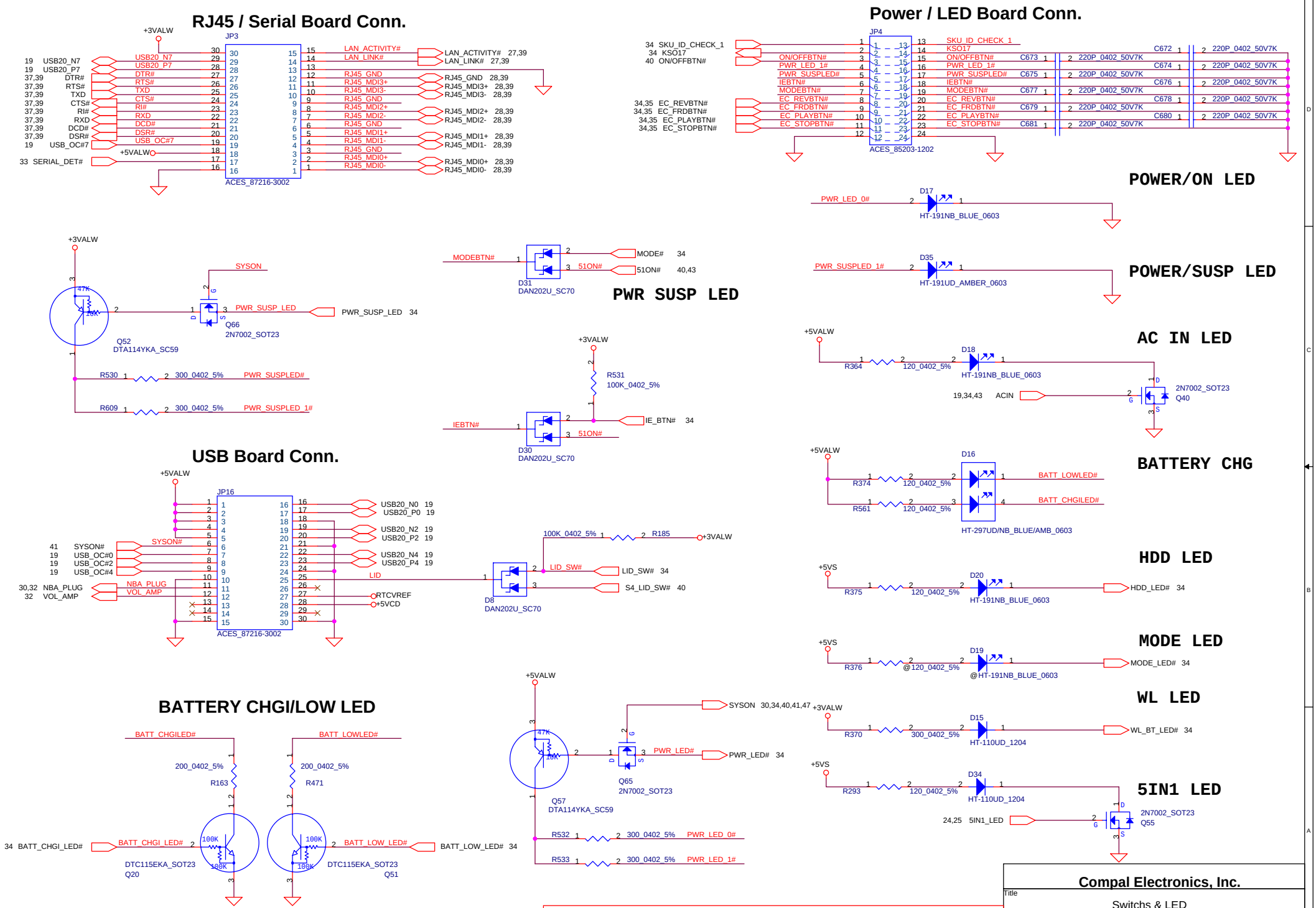

Compal Electronics, Inc.

Title: Switchs & LED

Document Number: Sakhir LA-2491

Rev: 1.0

Date: 星期一, 十二月 06, 2004

Sheet 38 of 51

THIS SHEET OF ENGINEERING DRAWING IS THE PROPRIETARY PROPERTY OF COMPAL ELECTRONICS, INC. AND CONTAINS CONFIDENTIAL AND TRADE SECRET INFORMATION. THIS SHEET MAY NOT BE TRANSFERED FROM THE CUSTODY OF THE COMPETENT DIVISION OF R&D DEPARTMENT EXCEPT AS AUTHORIZED BY COMPAL ELECTRONICS, INC. NEITHER THIS SHEET NOR THE INFORMATION IT CONTAINS MAY BE USED BY OR DISCLOSED TO ANY THIRD PARTY WITHOUT PRIOR WRITTEN CONSENT OF COMPAL ELECTRONICS, INC.

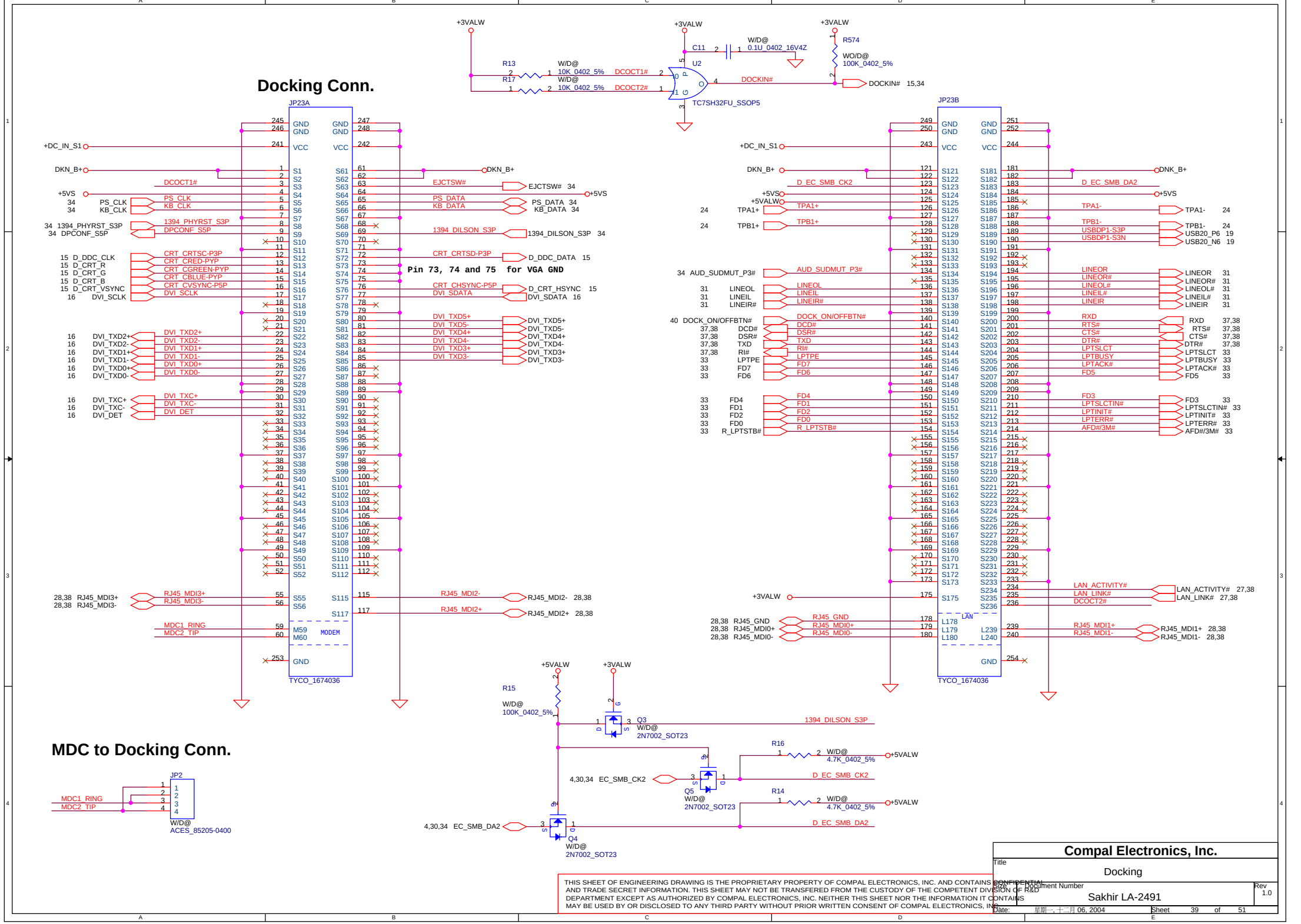
Docking Conn.
JP23A
JP23B
TYCO_1674036
TC7SH32FU_SSOP5
U2
C11
W/D@
0.1U_0402_16V4Z
R574
WO/D@
100K_0402_5%
R13
R17
W/D@
10K_0402_5%
DCOCT1#
DCOCT2#
DOCKIN#
DOCKIN# 15,34
+3VALW
+5VALW
+5VS
+DC_IN_S1
DKN_B+
DNK_B+
EJCTSW# 34
PS_CLK
KB_CLK
PS_DATA 34
KB_DATA 34
1394_PHYRST_S3P
DPCONF_S5P
1394_DILSON_S3P 34
CRT_CRTSC-P3P
CRT_CRED-PYP
CRT_CGREEN-PYP
CRT_CBLUE-PYP
CRT_CVSYNC-P5P
DVI_SCLK
CRT_CRTSD-P3P
D_DDC_DATA 15
Pin 73, 74 and 75 for VGA GND
CRT_CHSYNC-P5P
DVI_SDATA
D_CRT_HSYNC 15
DVI_SDATA 16
DVI_TXD2+
DVI_TXD2-
DVI_TXD1+
DVI_TXD1-
DVI_TXD0+
DVI_TXD0-
DVI_TXD5+
DVI_TXD5-
DVI_TXD4+
DVI_TXD4-
DVI_TXD3+
DVI_TXD3-
DVI_TXC+
DVI_TXC-
DVI_DET
RJ45_MDI3+
RJ45_MDI3-
RJ45_MDI2-
RJ45_MDI2+
MDC1_RING
MDC2_TIP
MODEM
D_EC_SMB_CK2
D_EC_SMB_DA2
TPA1+
TPB1+
TPA1-
TPB1-
USBDP1-S3P
USBDP1-S3N
USB20_P6 19
USB20_N6 19
AUD_SUDMUT_P3#
LINEOL
LINEIL
LINEIR#
LINEOR
LINEOR#
LINEOL#
LINEIL#
LINEIR
DOCK_ON/OFFBTN#
DCD#
DSR#
TXD
RI#
LPTPE
FD7
FD6
RXD
RTS#
CTS#
DTR#
LPTSLCT
LPTBUSY
LPTACK#
FD5
FD4
FD1
FD2
FD0
R_LPTSTB#
FD3
LPTSLCTIN#
LPTINIT#
LPTERR#
AFD#/3M#
LAN_ACTIVITY#
LAN_LINK#
DCOCT2#
RJ45_GND
RJ45_MDI0+
RJ45_MDI0-
RJ45_MDI1+
RJ45_MDI1-
LAN
MDC1_RING
MDC2_TIP
JP2
W/D@
ACES_85205-0400
R15
W/D@
100K_0402_5%
Q3
W/D@
2N7002_SOT23
1394_DILSON_S3P
R16
W/D@
4.7K_0402_5%
4,30,34 EC_SMB_CK2
Q5
W/D@
2N7002_SOT23
R14
W/D@
4.7K_0402_5%
4,30,34 EC_SMB_DA2
Q4
W/D@
2N7002_SOT23
THIS SHEET OF ENGINEERING DRAWING IS THE PROPRIETARY PROPERTY OF COMPAL ELECTRONICS, INC. AND CONTAINS CONFIDENTIAL AND TRADE SECRET INFORMATION. THIS SHEET MAY NOT BE TRANSFERED FROM THE CUSTODY OF THE COMPETENT DIVISION OF R&D DEPARTMENT EXCEPT AS AUTHORIZED BY COMPAL ELECTRONICS, INC. NEITHER THIS SHEET NOR THE INFORMATION IT CONTAINS MAY BE USED BY OR DISCLOSED TO ANY THIRD PARTY WITHOUT PRIOR WRITTEN CONSENT OF COMPAL ELECTRONICS, INC.
Compal Electronics, Inc.
Title
Docking
Size
Document Number
Sakhir LA-2491
Rev
1.0
Date:
星期一, 十二月 06, 2004
Sheet
39
of
51

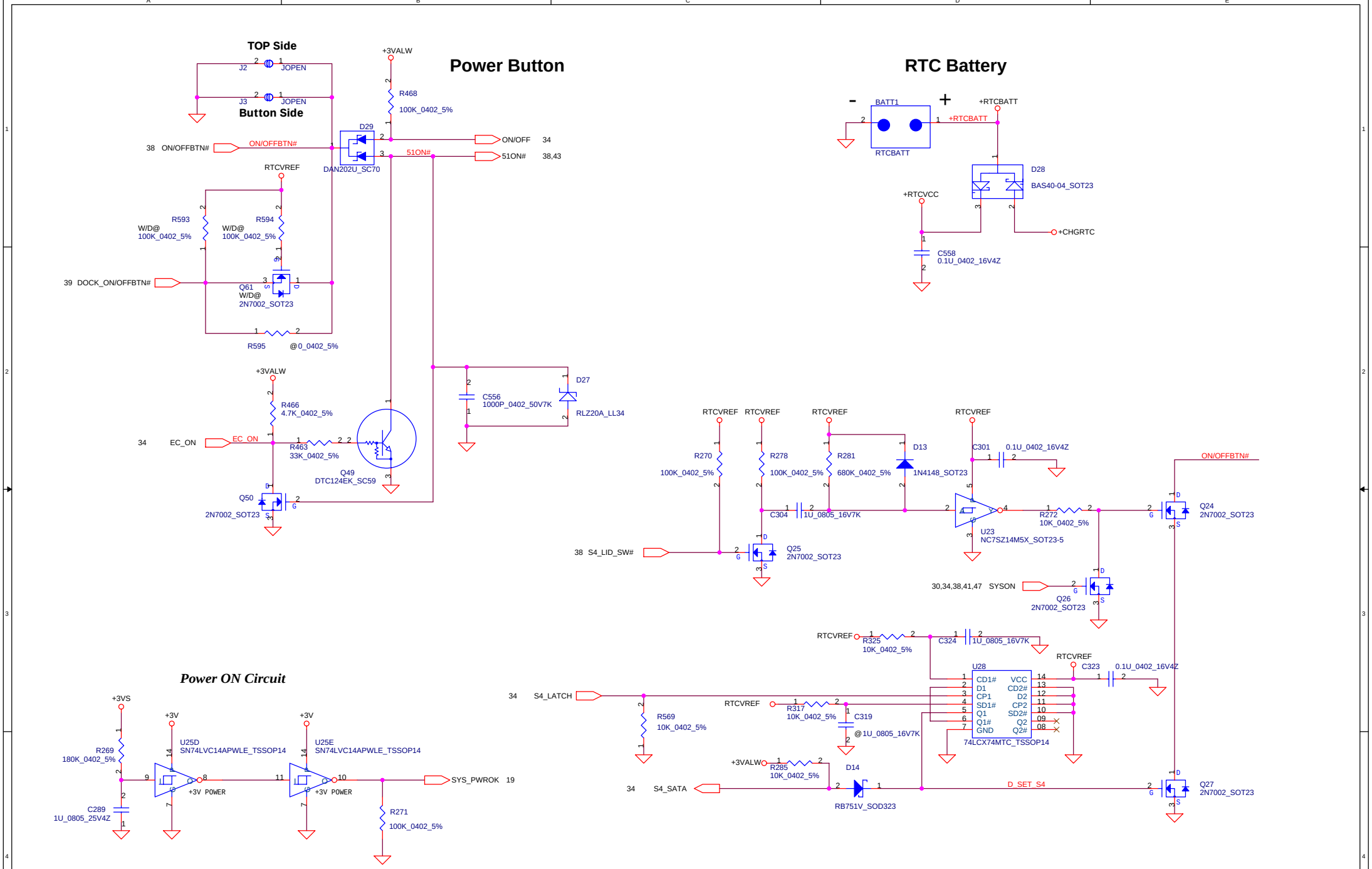

Compal Electronics, Inc.	
Title	Power OK/Reset/RTC battery
Size	Document Number: Sakhir LA-2491
Rev	1.0
Date: 星期一, 十二月 06, 2004	Sheet 40 of 51

THIS SHEET OF ENGINEERING DRAWING IS THE PROPRIETARY PROPERTY OF COMPAL ELECTRONICS, INC. AND CONTAINS CONFIDENTIAL AND TRADE SECRET INFORMATION. THIS SHEET MAY NOT BE TRANSFERED FROM THE CUSTODY OF THE COMPETENT DIVISION OF R&D DEPARTMENT EXCEPT AS AUTHORIZED BY COMPAL ELECTRONICS, INC. NEITHER THIS SHEET NOR THE INFORMATION IT CONTAINS MAY BE USED BY OR DISCLOSED TO ANY THIRD PARTY WITHOUT PRIOR WRITTEN CONSENT OF COMPAL ELECTRONICS, INC.

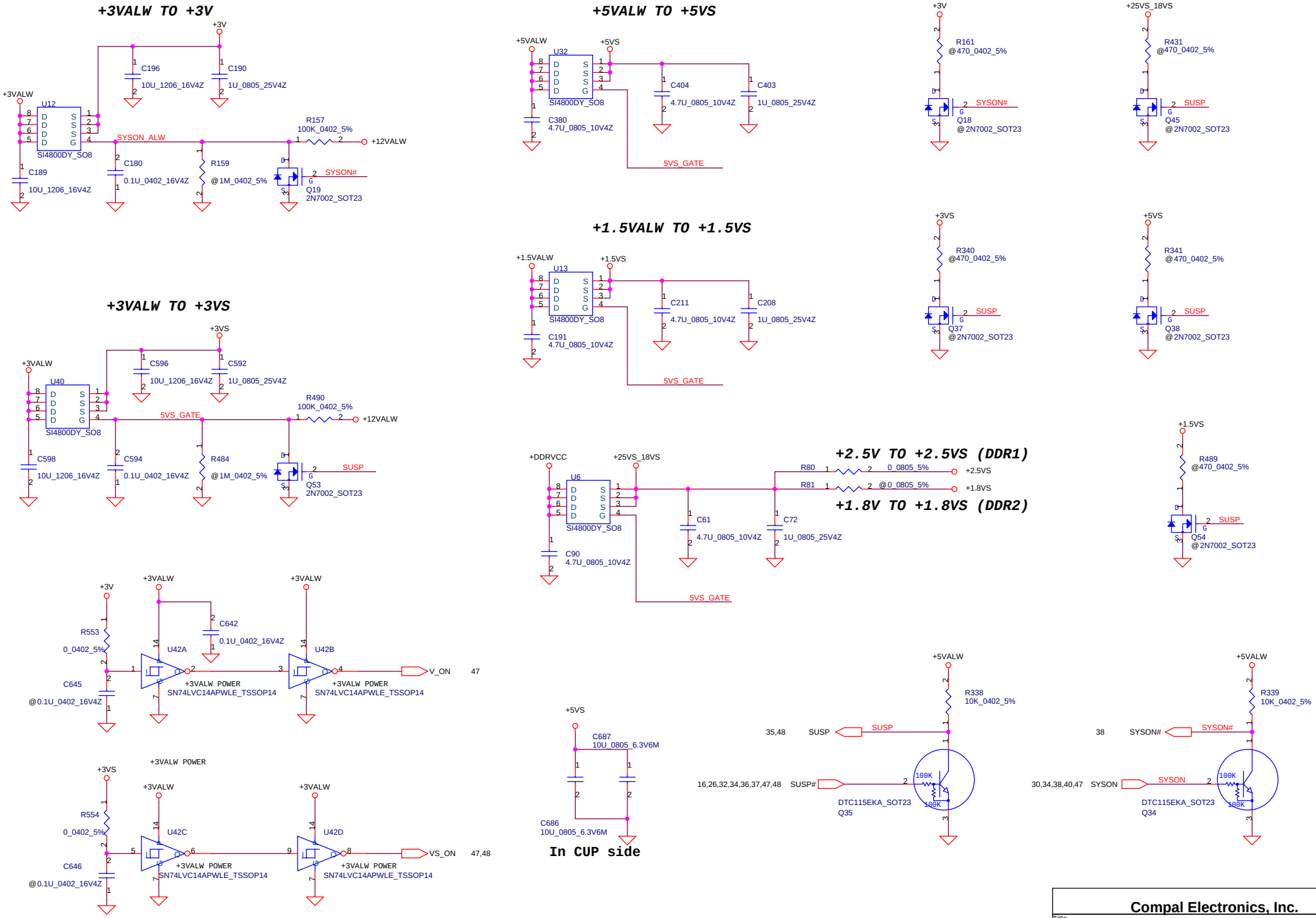

PROPRIETARY NOTE THIS SHEET OF ENGINEERING DRAWING IS THE PROPRIETARY PROPERTY OF COMPAL ELECTRONICS, INC. AND CONTAINS CONFIDENTIAL AND TRADE SECRET INFORMATION. THIS SHEET MAY NOT BE TRANSFERRED FROM THE CUSTODY OF THE COMPETENT DIVISION OF R&D DEPARTMENT EXCEPT AS AUTHORIZED BY COMPAL ELECTRONICS, INC. NEITHER THIS SHEET NOR THE INFORMATION IT CONTAINS MAY BE USED BY OR DISCLOSED TO ANY THIRD PARTY WITHOUT PRIOR WRITTEN CONSENT OF COMPAL ELECTRONICS, INC.

Compal Electronics, Inc.

Title	POWER CONTROL CKT
Size B	Document Number: Sakhir LA-2491
Rev	1.0
Date:	星期一, 十二月 06, 2004
Sheet	41 of 51

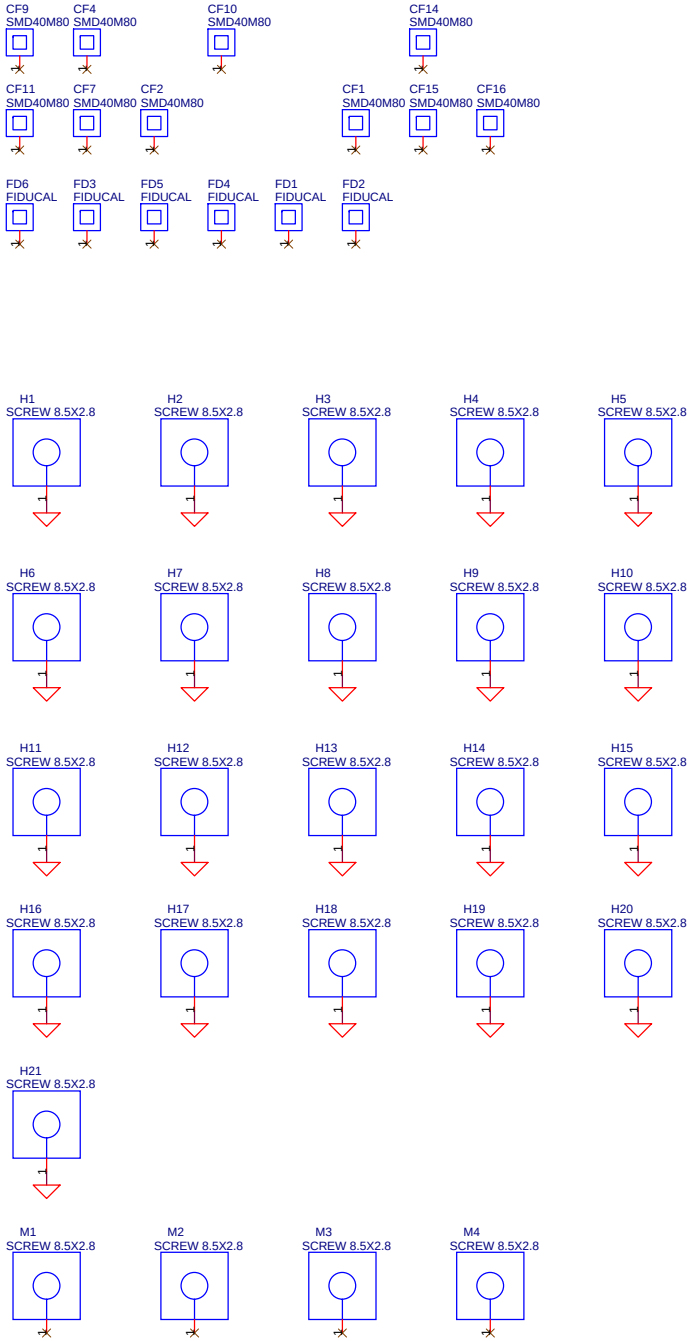

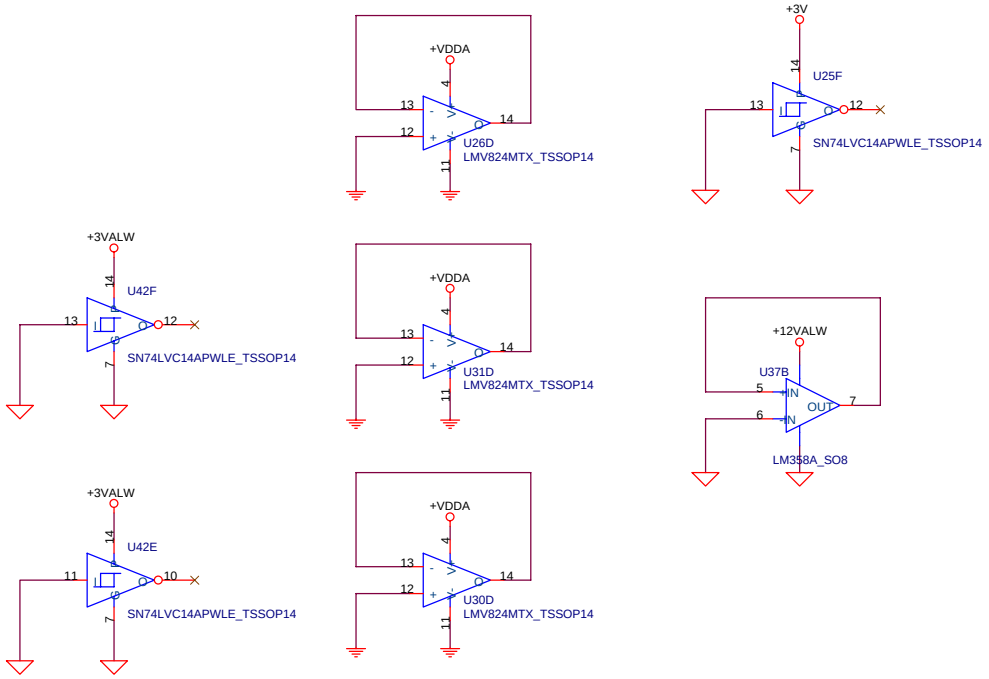

THIS SHEET OF ENGINEERING DRAWING IS THE PROPRIETARY PROPERTY OF COMPAL ELECTRONICS, INC. AND CONTAINS CONFIDENTIAL AND TRADE SECRET INFORMATION. THIS SHEET MAY NOT BE TRANSFERRED FROM THE CUSTODY OF THE COMPETENT DIVISION OF R&D DEPARTMENT EXCEPT AS AUTHORIZED BY COMPAL ELECTRONICS, INC. NEITHER THIS SHEET NOR THE INFORMATION IT CONTAINS MAY BE USED BY OR DISCLOSED TO ANY THIRD PARTY WITHOUT PRIOR WRITTEN CONSENT OF COMPAL ELECTRONICS, INC.

Compal Electronics, Inc.

Title	Screws	
Size	Document Number: Sakhir LA-2491	Rev 1.0
Date: 星期一, 十二月 06, 2004	Sheet 42 of 51	

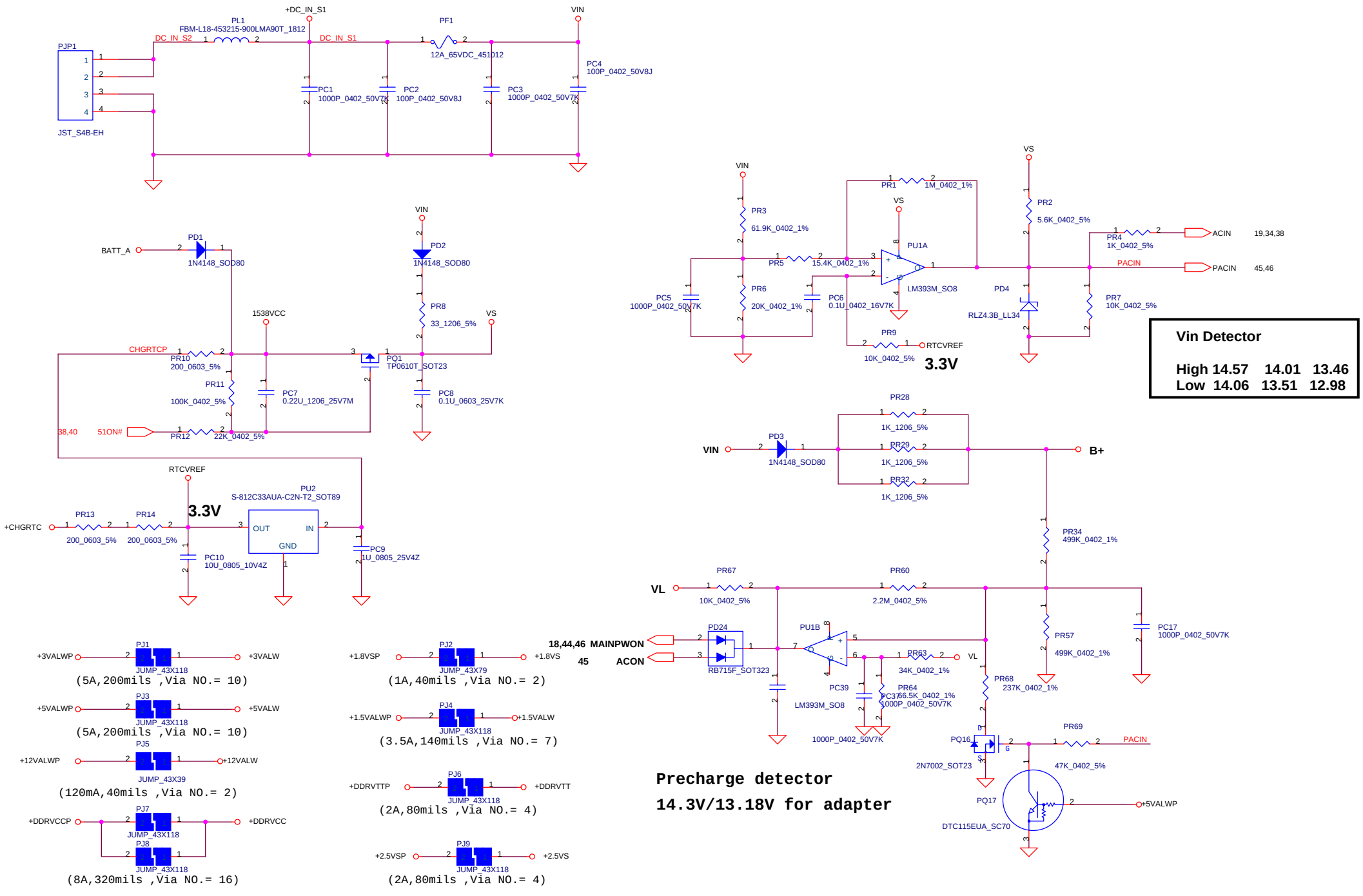

THIS SHEET OF ENGINEERING DRAWING IS THE PROPRIETARY PROPERTY OF COMPAL ELECTRONICS, INC. AND CONTAINS CONFIDENTIAL AND TRADE SECRET INFORMATION. THIS SHEET MAY NOT BE TRANSFERRED FROM THE CUSTODY OF THE COMPETENT DIVISION OF R&D DEPARTMENT EXCEPT AS AUTHORIZED BY COMPAL ELECTRONICS, INC. NEITHER THIS SHEET NOR THE INFORMATION IT CONTAINS MAY BE USED BY OR DISCLOSED TO ANY THIRD PARTY WITHOUT PRIOR WRITTEN CONSENT OF COMPAL ELECTRONICS, INC.

Compal Electronics, Inc.

Title: **DCIN & DETECTOR**

Size | Document Number: **Sakhir LA-2491** | Rev 1.0

Date: 星期一, 十二月 06, 2004 | Sheet 43 of 51

PH1 under CPU botten side :
CPU thermal protection at 84 degree C
Recovery at 45 degree C

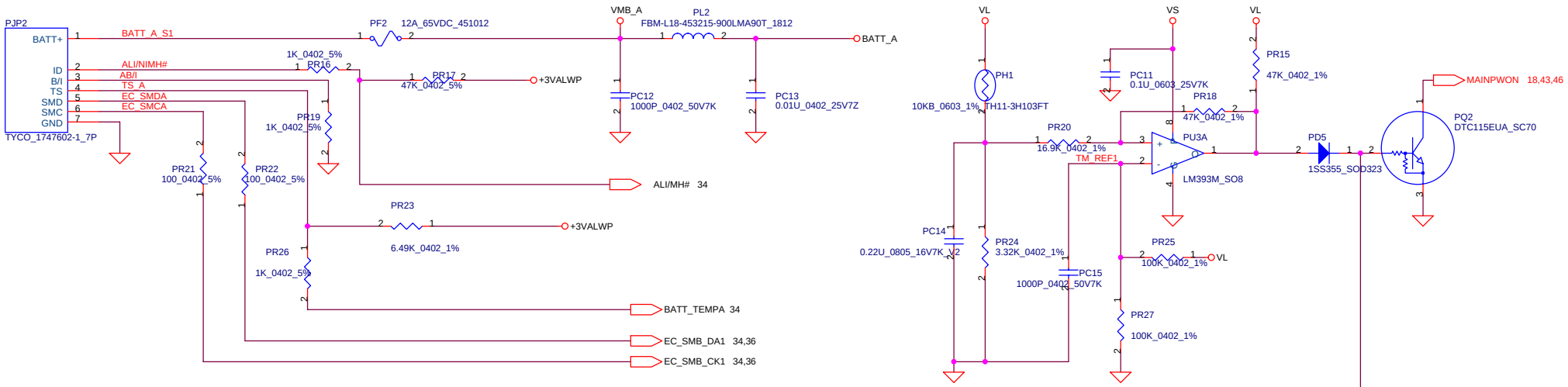

PH2 near main Battery CONN :
BAT. thermal protection at 79 degree C
Recovery at 45 degree C

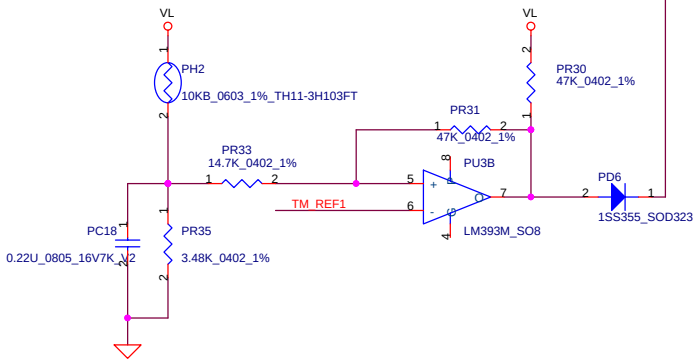

THIS SHEET OF ENGINEERING DRAWING IS THE PROPRIETARY PROPERTY OF COMPAL ELECTRONICS, INC. AND CONTAINS CONFIDENTIAL AND TRADE SECRET INFORMATION. THIS SHEET MAY NOT BE TRANSFERRED FROM THE CUSTODY OF THE COMPETENT DIVISION OF R&D DEPARTMENT EXCEPT AS AUTHORIZED BY COMPAL ELECTRONICS, INC. NEITHER THIS SHEET NOR THE INFORMATION IT CONTAINS MAY BE USED BY OR DISCLOSED TO ANY THIRD PARTY WITHOUT PRIOR WRITTEN CONSENT OF COMPAL ELECTRONICS, INC.

Compal Electronics, Inc.	
Title	BATTERY CONN / OTP
Size	Document Number: Sakhir LA-2491 — Rev 1.0
Date: 星期一, 十二月 06, 2004	Sheet 44 of 51

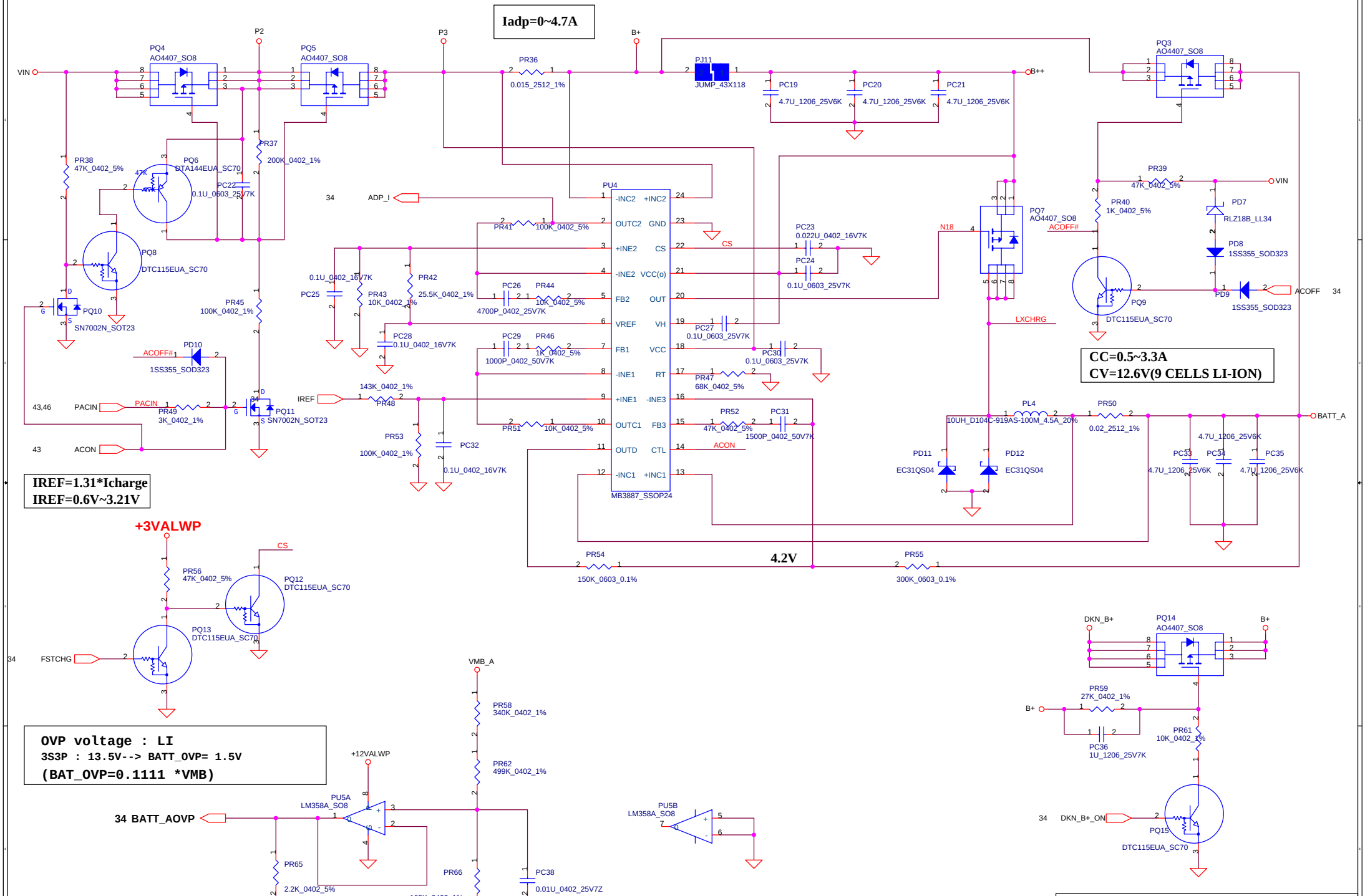

THIS SHEET OF ENGINEERING DRAWING IS THE PROPRIETARY PROPERTY OF COMPAL ELECTRONICS, INC. AND CONTAINS CONFIDENTIAL AND TRADE SECRET INFORMATION. THIS SHEET MAY NOT BE TRANSFERRED FROM THE CUSTODY OF THE COMPETENT DIVISION OF R&D DEPARTMENT EXCEPT AS AUTHORIZED BY COMPAL ELECTRONICS, INC. NEITHER THIS SHEET NOR THE INFORMATION IT CONTAINS MAY BE USED BY OR DISCLOSED TO ANY THIRD PARTY WITHOUT PRIOR WRITTEN CONSENT OF COMPAL ELECTRONICS, INC.

Compal Electronics, Inc.

Title	CHARGER	
Size	Document Number: Sakhir LA-2491	Rev 1.0
Date: 星期一, 十二月 06, 2004	Sheet 45 of 51	

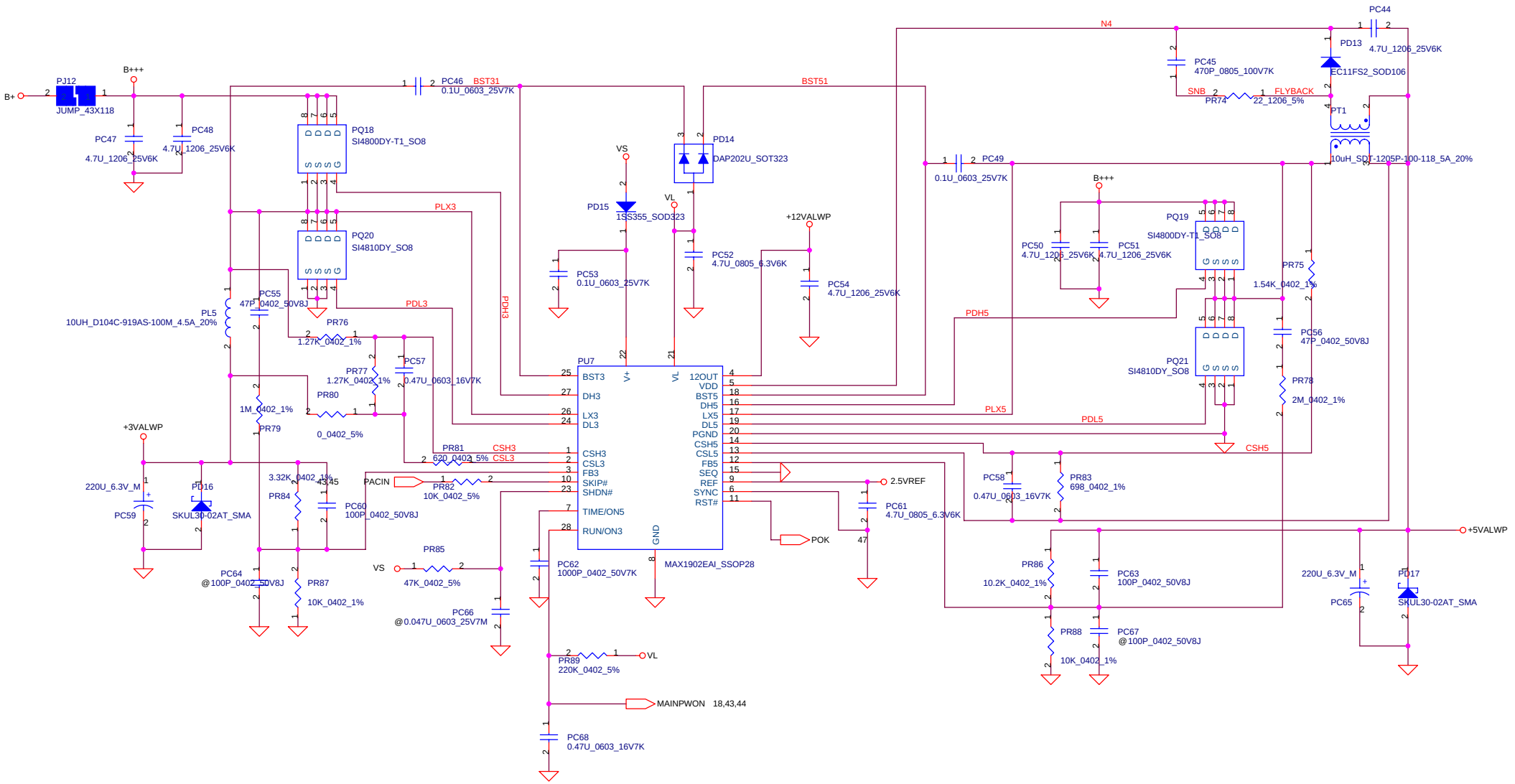

THIS SHEET OF ENGINEERING DRAWING IS THE PROPRIETARY PROPERTY OF COMPAL ELECTRONICS, INC. AND CONTAINS CONFIDENTIAL AND TRADE SECRET INFORMATION. THIS SHEET MAY NOT BE TRANSFERRED FROM THE CUSTODY OF THE COMPETENT DIVISION OF R&D DEPARTMENT EXCEPT AS AUTHORIZED BY COMPAL ELECTRONICS, INC. NEITHER THIS SHEET NOR THE INFORMATION IT CONTAINS MAY BE USED BY OR DISCLOSED TO ANY THIRD PARTY WITHOUT PRIOR WRITTEN CONSENT OF COMPAL ELECTRONICS, INC.

Compal Electronics, Inc.

Title: 5V/3.3V/12V

Size | Document Number: Sakhir LA-2491 | Rev: 1.0

Date: 星期一, 十二月 06, 2004 | Sheet 46 of 51

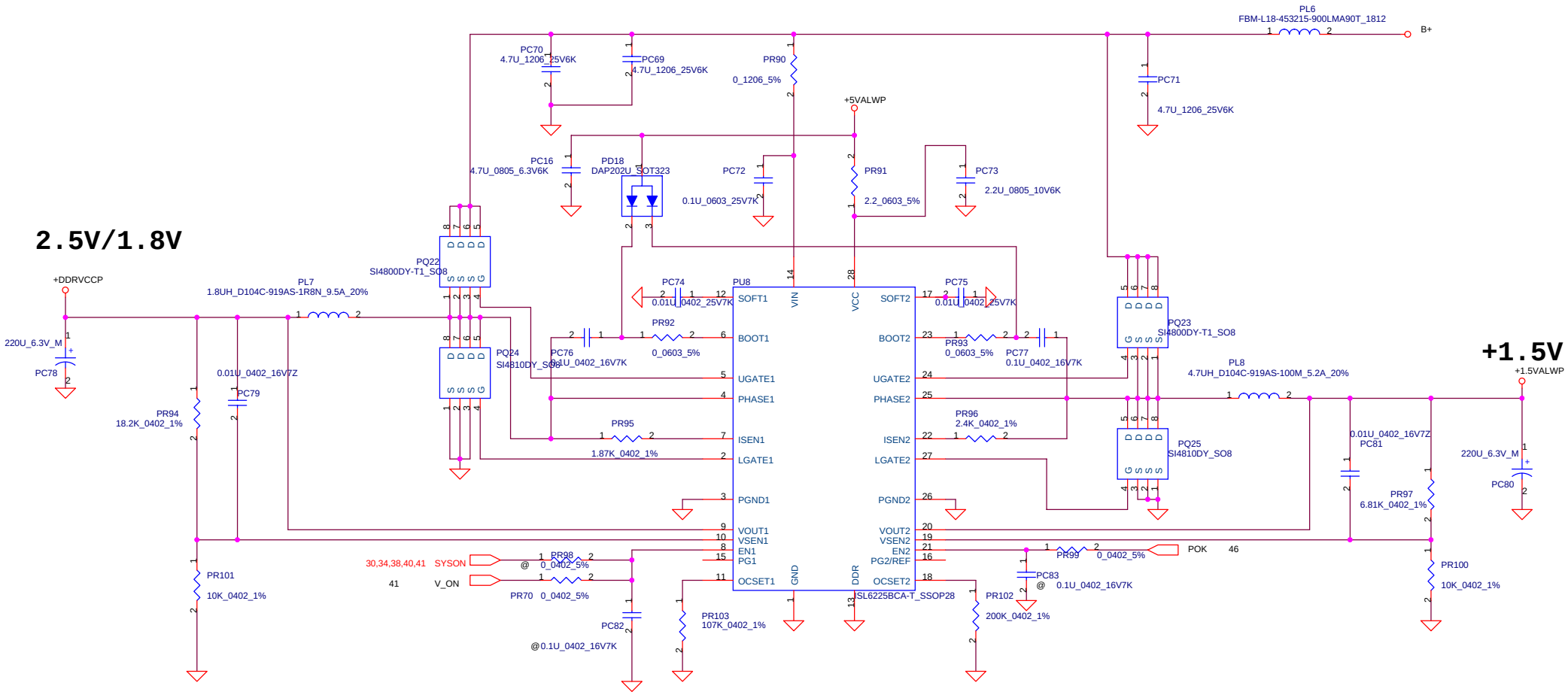

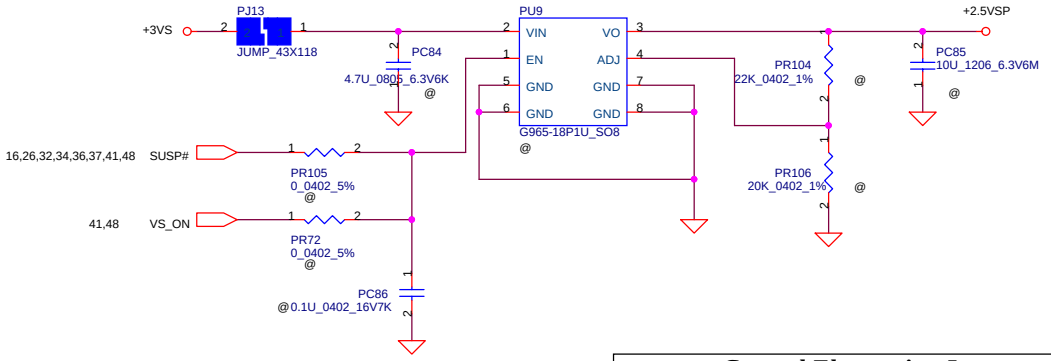

	PR94	UNPOP
DDRI	18.2K_0402_1% (2.5V)	PU9,PC84,PR105,PR104,PR106,PC85
DDRII	10K_0402_1% (1.8V)	PU12,PC95,PR114,PC96

THIS SHEET OF ENGINEERING DRAWING IS THE PROPRIETARY PROPERTY OF COMPAL ELECTRONICS, INC. AND CONTAINS CONFIDENTIAL AND TRADE SECRET INFORMATION. THIS SHEET MAY NOT BE TRANSFERRED FROM THE CUSTODY OF THE COMPETENT DIVISION OF R&D DEPARTMENT EXCEPT AS AUTHORIZED BY COMPAL ELECTRONICS, INC. NEITHER THIS SHEET NOR THE INFORMATION IT CONTAINS MAY BE USED BY OR DISCLOSED TO ANY THIRD PARTY WITHOUT PRIOR WRITTEN CONSENT OF COMPAL ELECTRONICS, INC.

Compal Electronics, Inc.

Title: DDRVCC/1.5V/2.5V

Size | Document Number: Sakhir LA-2491 | Rev 1.0

Date: 星期一, 十二月 06, 2004 | Sheet 47 of 51

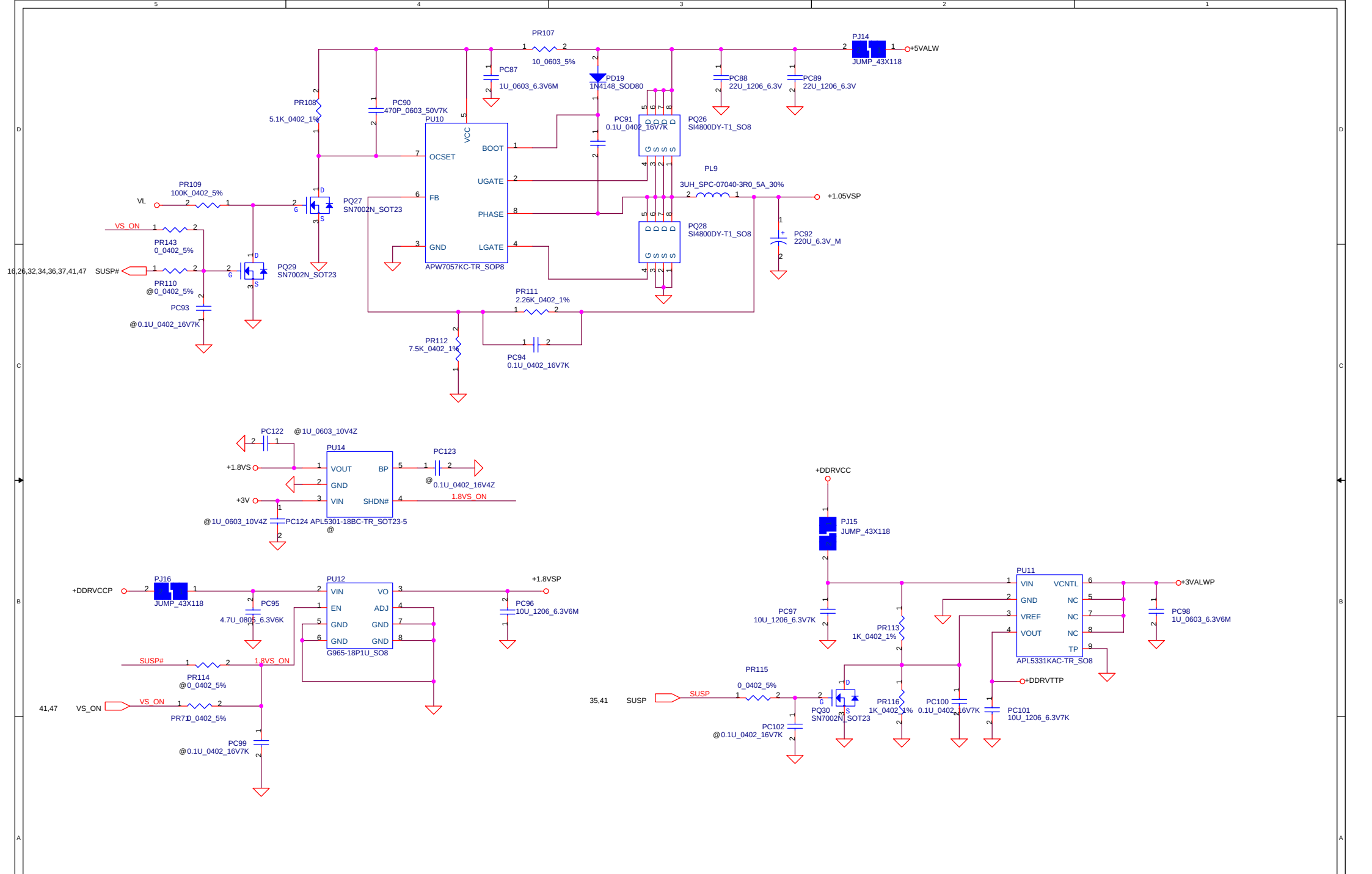

THIS SHEET OF ENGINEERING DRAWING IS THE PROPRIETARY PROPERTY OF COMPAL ELECTRONICS, INC. AND CONTAINS CONFIDENTIAL AND TRADE SECRET INFORMATION. THIS SHEET MAY NOT BE TRANSFERRED FROM THE CUSTODY OF THE COMPETENT DIVISION OF R&D DEPARTMENT EXCEPT AS AUTHORIZED BY COMPAL ELECTRONICS, INC. NEITHER THIS SHEET NOR THE INFORMATION IT CONTAINS MAY BE USED BY OR DISCLOSED TO ANY THIRD PARTY WITHOUT PRIOR WRITTEN CONSENT OF COMPAL ELECTRONICS, INC.

Compal Electronics, Inc.

Title: **1.05V/1.8V/DDRVTT**

Size | Document Number: **Sakhir LA-2491** | Rev: 1.0

Date: 星期一, 十二月 06, 2004 | Sheet 48 of 51

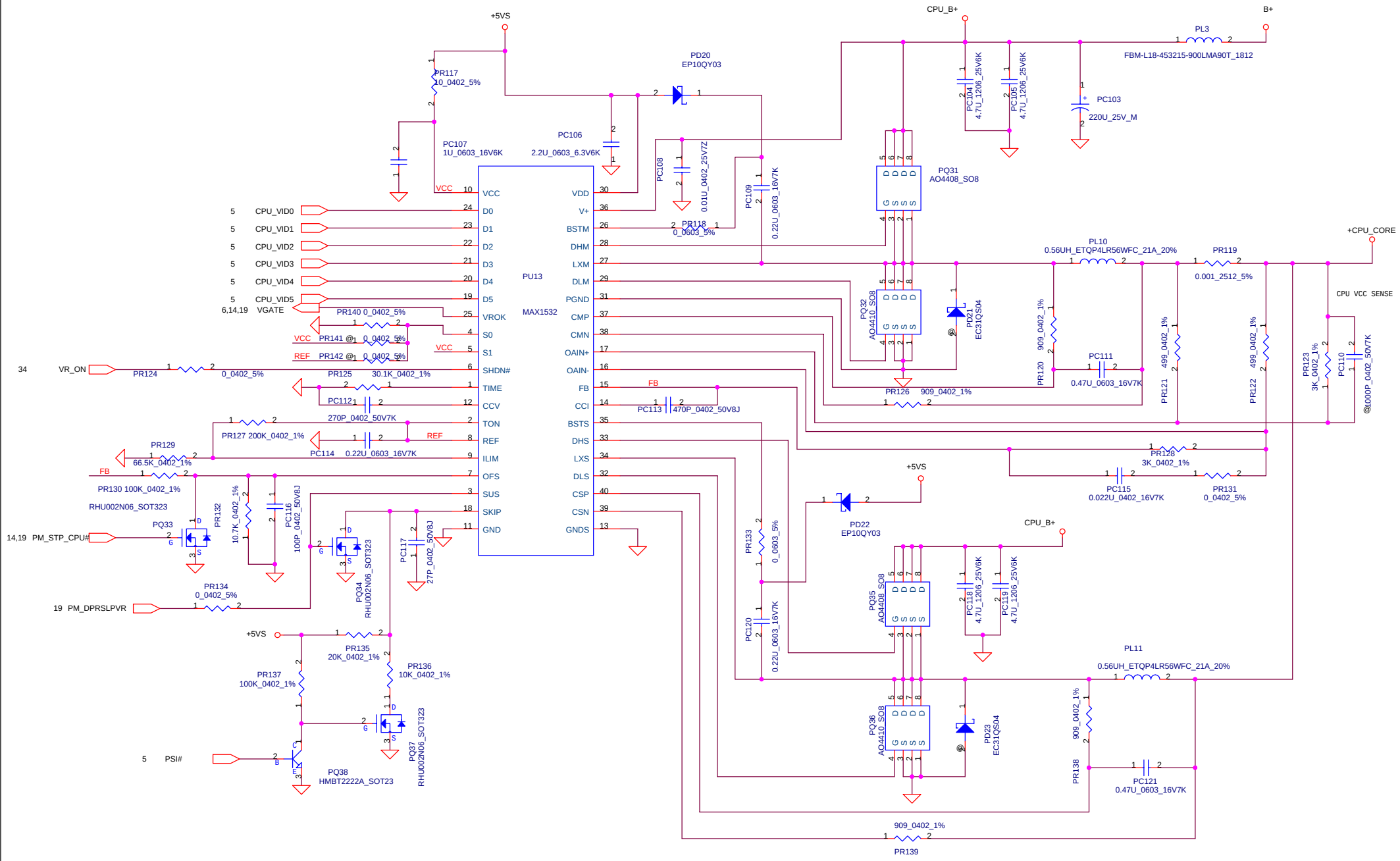

THIS SHEET OF ENGINEERING DRAWING IS THE PROPRIETARY PROPERTY OF COMPAL ELECTRONICS, INC. AND CONTAINS CONFIDENTIAL AND TRADE SECRET INFORMATION. THIS SHEET MAY NOT BE TRANSFERRED FROM THE CUSTODY OF THE COMPETENT DIVISION OF R&D DEPARTMENT EXCEPT AS AUTHORIZED BY COMPAL ELECTRONICS, INC. NEITHER THIS SHEET NOR THE INFORMATION IT CONTAINS MAY BE USED BY OR DISCLOSED TO ANY THIRD PARTY WITHOUT PRIOR WRITTEN CONSENT OF COMPAL ELECTRONICS, INC.

Compal Electronics, Inc.

Title: **CPU_CORE**

Size | Document Number: **Sakhir LA-2491** | Rev 1.0

Date: 星期一, 十二月 06, 2004 | Sheet 49 of 51

EAT10 PIR List

********** Rev:0.2 PIR List 2004/08/10 Writer by Jason **********

```
P05:Add @ in R63
    Del @ in R56

P06:Del @ in R54
    Del JP9

P08:Q6, Q43, Q44 Horizontally
    "GMCH_TXCLK-, GMCH_TXCLK+" Swap

P12:+3VS change from JP25.194 to JP25.196

P15:Update U4 CIS lib

P16:Del JP9
    New add Q56

P21:New add R513
    New add X3
    New add C607

P22:New add R514, R534, @R535

P30:New add C639, C640
    Change U27 to ALC250D
    New add @R539, @R540, @R542, @Q59
    New add @R536, @R537, @R538, @R541, @Q58
    New add C608, C609, R522, R521, R526, C610, C611, C612, C641, X4
    New add @R523, @R524, @R525
    Del R295, R296, R310, R327, L20, @C311, C374

P33:New add R543, R544

P34:Del @ in R478
    New add R547, @R548, R549, R550

P35:Del CP2, CP3, CP4, CP5, CP6, CP7
    Modify JP14 Pin Define
    New add C613, C614, C615, C616, C617
    New add C618, C619, C620, C621, C622
    New add C623, C624, C625, C626, C627
    New add C628, C629, C630, C631, C632
    New add C633, C634, C635, C636

P36:Del @U42, @C608
    New add U43, U44, U45
    New add C637, C638
    New add R527, R528, R529

P37:Swap JP12.1, JP12.3
    Swap SW1.1, SW1.3

P38:Q52 change from 2N7002 to DTA114
    New add R530, R531, R532, R533, Q57
```

********** Rev:0.3 PIR List 2004/10/26 Writer by Sam Tsai **********

```
P04:Add @ in R28                                          Intel Recommend

P06:Add @ in C441, C427
    Del @ in C460 Change Value from 220U to 330U          Power Team testing OK

P12:+3VS change from JP25.196 to JP25.194                 Intel Recommend

P15:New add R570, R571 & R572                             RGB without Docking
    New add L33                                           EMI
    Del D2 & D25                                          EMI

P16:Change U44 from 7404 to 74125                         LCDVDD Soft-Start

P18:New add R573                                          Intel Recommend
    R439 Change Value from 180K to 20K                    Intel Recommend
    C271 Change Value from 0.1U to 1U                     Intel Recommend

P20:R214 Change Value from 1K to 10ohm                    Intel Recommend

P22:New add @R  , @R& Q                                   SWDJ testing

P24:New add R586                                          TI Recommend
    New add @R581

P25:New add R582, R583, @R584, R585, R588, R589 & @C685   TI Recommend

P27:R73  Change Value from 4.99K to 4.7K                  Marvwll Recommend

P31:R361 & R371 Change Value from 47K to 22K              Design Change
P33:New add R543, R544
P32:Modify C399 Net to SPKL+                              Design Change

P33:New add L34                                           EMI
    add@ in C647 ~ C662

P34:New add R587                                          Design Change

P35:New add JP32 & C671                                   Design Change
    New add C682 ~ C684                                   EMI
    JP13 reverse                                          Design Change

P36:New add                                               SWDJ testing

P37:SW1 change to 1BS003-1211L_3P                         Design Change

P38:Q52.3 change from +3VALW to +3V                       Design Change
    Q57.3 change from +5VALW to +5VS
    Lid Switch IC Power change from JP16.26 +3VALW to JP16.27 RTCVREF
    New add C672 ~ C681                                   EMI

P39:New add R574                                          Design Change

P40:Del D11                                               Design Change
```

Compal Electronics, Inc.		
Title: PIR		
Size	Document Number: Sakhir LA-2491	Rev 1.0
Date: 星期一, 十二月 06, 2004	Sheet 50 of 51	

Version Change List (P. I. R. List) for Power Circuit

Item	Page#	Title	Date	Request Owner	Description	Rev.
1	45	Design change	07/06/2004	Compal	Change PD7 from RLZ22B to RLZ18B for 15V adapter OVP	0.1
2	43	Design change	08/20/2004	Compal	Add precharge function for MAX1902 UVP when adapter pull out /in right away	0.2
3	49	Design change	08/20/2004	Compal	Add PL3 fo speed step function,change PC103 from 100U_25V_M to 220U_25V_M	0.2
						0.2
						0.2
						0.2
						0.2
						0.2
						0.2

Compal Electronics, Inc.	
Title	Changed-List History-1
Size / Document Number	LA-2251
Rev	1.0
Date: 星期一, 十二月 06, 2004	Sheet 51 of 51