Compal Confidential

Model Name : AMD Kabini

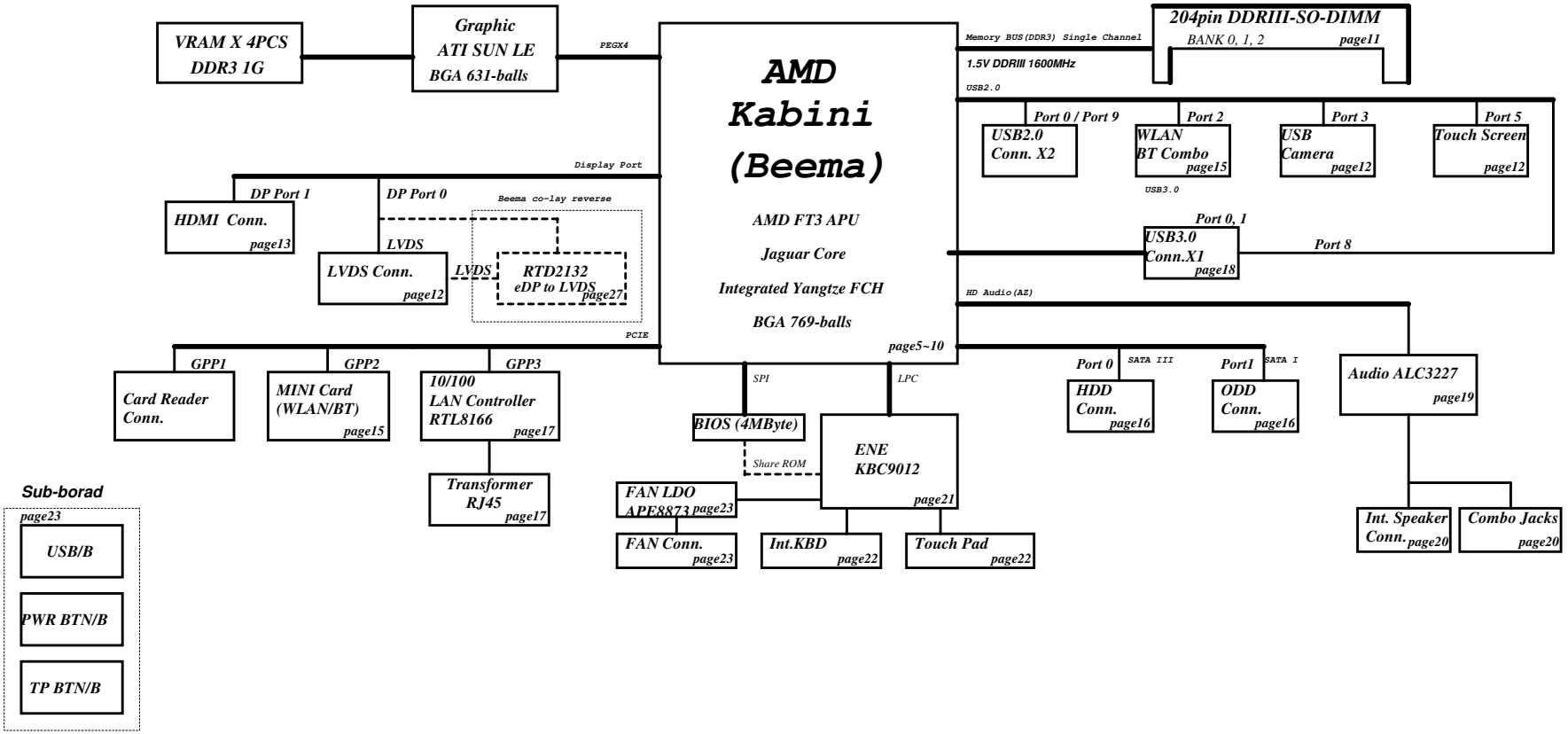

Security Classification	Compal Secret Data			Compal Electronics, Inc.
Issued Date	2013/02/26	Deciphered Date	2015/07/08	Title: BLOCK DIAGRAMS

THIS SHEET OF ENGINEERING DRAWING IS THE PROPRIETARY PROPERTY OF COMPAL ELECTRONICS, INC. AND CONTAINS CONFIDENTIAL AND TRADE SECRET INFORMATION. THIS SHEET MAY NOT BE TRANSFERED FROM THE CUSTODY OF THE COMPETENT DIVISION OR R&D DEPARTMENT EXCEPT AS AUTHORIZED BY COMPAL ELECTRONICS, INC. NEITHER THIS SHEET NOR THE INFORMATION IT CONTAINS MAY BE USED BY OR DISCLOSED TO ANY THIRD PARTY WITHOUT PRIOR WRITTEN CONSENT OF COMPAL ELECTRONICS, INC.

Size	Document Number	Rev
Custom	LA-A997P	1.0

Date: Tuesday, May 20, 2014 Sheet 2 of 47

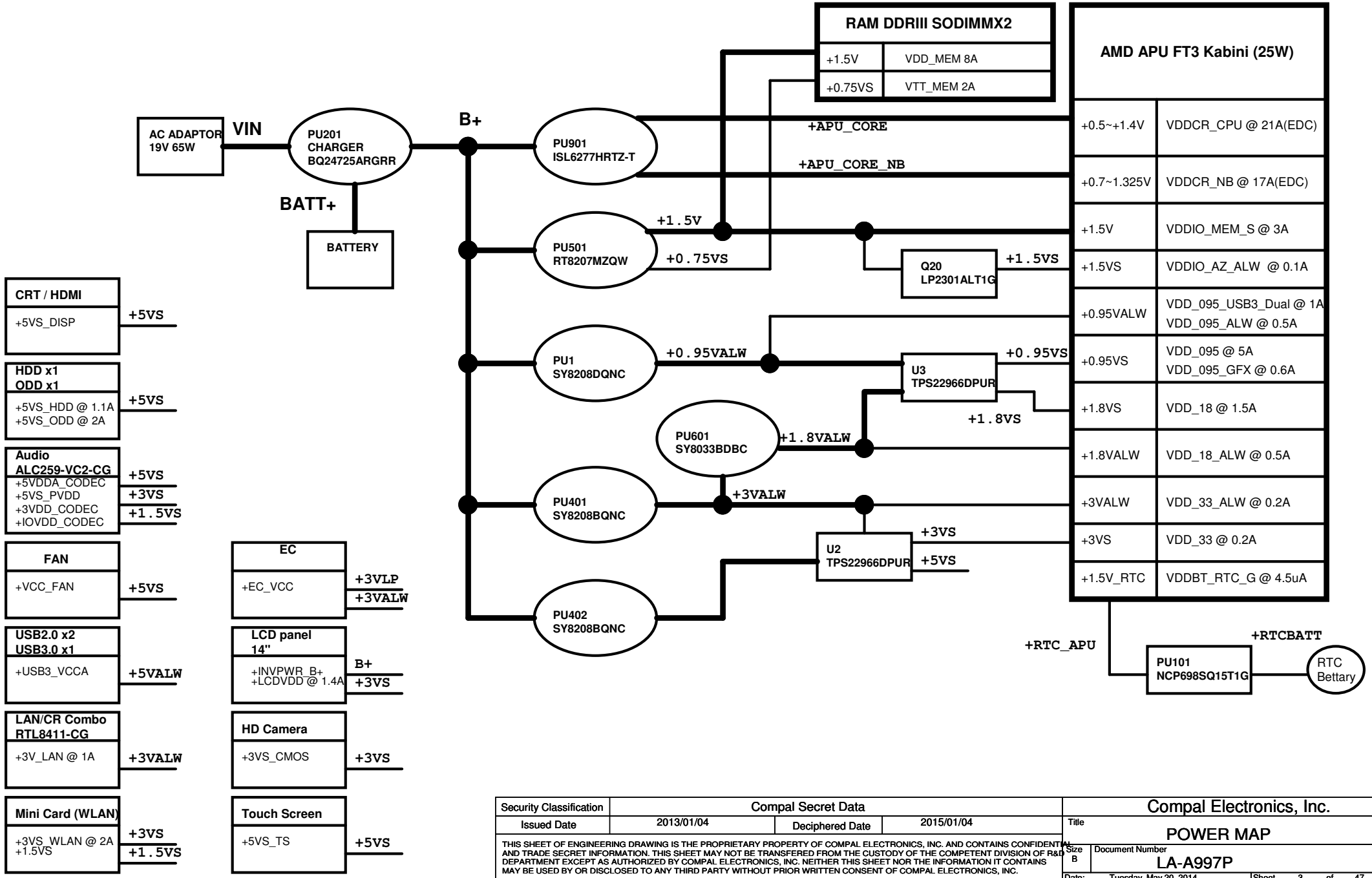

Security Classification	Compal Secret Data		
Issued Date	2013/01/04	Deciphered Date	2015/01/04

THIS SHEET OF ENGINEERING DRAWING IS THE PROPRIETARY PROPERTY OF COMPAL ELECTRONICS, INC. AND CONTAINS CONFIDENTIAL AND TRADE SECRET INFORMATION. THIS SHEET MAY NOT BE TRANSFERED FROM THE CUSTODY OF THE COMPETENT DIVISION OF R&D DEPARTMENT EXCEPT AS AUTHORIZED BY COMPAL ELECTRONICS, INC. NEITHER THIS SHEET NOR THE INFORMATION IT CONTAINS MAY BE USED BY OR DISCLOSED TO ANY THIRD PARTY WITHOUT PRIOR WRITTEN CONSENT OF COMPAL ELECTRONICS, INC.

Compal Electronics, Inc.

Title: POWER MAP

Size: B | Document Number: LA-A997P | Rev: 1.0

Date: Tuesday, May 20, 2014 | Sheet 3 of 47

Voltage Rails

Power Plane	Description	S0	S3	S5
VIN	Adapter power supply (19V)	ON	ON	ON
B+	AC or battery power rail for power circuit.	ON	ON	ON
+APU_CORE	Core voltage for APU	ON	OFF	OFF
+APU_CORE_NB	Voltage for On-die VGA of APU	ON	OFF	OFF
+0.95VALW	0.95V always on power rail	ON	OFF	OFF
+0.95VS	0.95V switched power rail	ON	OFF	OFF
+1.8VALW	1.8V always on power rail	ON	ON	ON*
+1.8VS	1.8V switched power rail	ON	OFF	OFF
+1.5V	1.5V power rail for APU and DDR	ON	ON	OFF
+1.5VS	1.5V switched power rail	ON	OFF	OFF
+0.75VS	0.75V switched power rail for DDR terminator	ON	OFF	OFF
+3VALW	3.3V always on power rail	ON	ON	OFF
+3VS	3.3V switched power rail	ON	OFF	OFF
+5VALW	5V always on power rail	ON	ON	ON
+5VS	5V switched power rail	ON	OFF	OFF
+RTC_APU	RTC power			

STATE \ SIGNAL	SLP_S3#	SLP_S5#	+VALW	+V	+VS	Clock
Full ON	HIGH	HIGH	ON	ON	ON	ON
S1(Power On Suspend)	HIGH	HIGH	ON	ON	ON	LOW
S3 (Suspend to RAM)	HIGH	HIGH	ON	ON	OFF	OFF
S4 (Suspend to Disk)	LOW	HIGH	ON	OFF	OFF	OFF
S5 (Soft OFF)	LOW	LOW	ON	OFF	OFF	OFF

Board ID / SKU ID Table for AD channel

Vcc	3.3V +/- 1%
Ra	100K +/- 1%

Board ID	Rb	V_{AD_BID} min	V_{AD_BID} typ	V_{AD_BID} max	EC AD
0	0	0.000 V	0.000 V	0.300 V	0x00 - 0x0B
1	12K +/- 1%	0.347 V	0.354 V	0.360 V	0x0C - 0x1C
2	15K +/- 1%	0.423 V	0.430 V	0.438 V	0x1D - 0x26
3	20K +/- 1%	0.541 V	0.550 V	0.559 V	0x27 - 0x30
4	27K +/- 1%	0.691 V	0.702 V	0.713 V	0x31 - 0x3B
5	33K +/- 1%	0.807 V	0.819 V	0.831 V	0x3C - 0x46
6	43K +/- 1%	0.978 V	0.992 V	1.006 V	0x47 - 0x54
7	56K +/- 1%	1.169 V	1.185 V	1.200 V	0x55 - 0x64

BOARD ID Table

Board ID	PCB Revision
0	EVT
1	
2	
3	
4	
5	
6	
7	

SMBus List

EC SMBus Port1 (+3VALW)

Device	Address	HEX
Smart Battery	0001 011X b	16H

EC SMBus Port2 (+3VS)

Device	Address	HEX
SB-TSI (APU)	1001 100X b	98H

APU SMBus Port0 (+3VS)

Device	Address	HEX
DDR DIMM2	1010 000Xb	A0H
DDR DIMM1	1010 001Xb	A2H
Mini Card (DNI)		

APU SMBus Port1(+3VALW)

Device	Address	HEX

BOM Structure Table

BOM Structure	BTO Item
@	Unpop
CONN@	Connector Part Control by ME
EMI@	EMI pop component
@EMI@	EMI unpop component
ESD@	ESD pop component
@ESD@	ESD Unpop component
eDP@	eDP Panel
LVDS@	LVDS Panel
AL@	Auto Load EC ROM
DB@	Debug only, remove at MP

APU POWER SEQUENCE

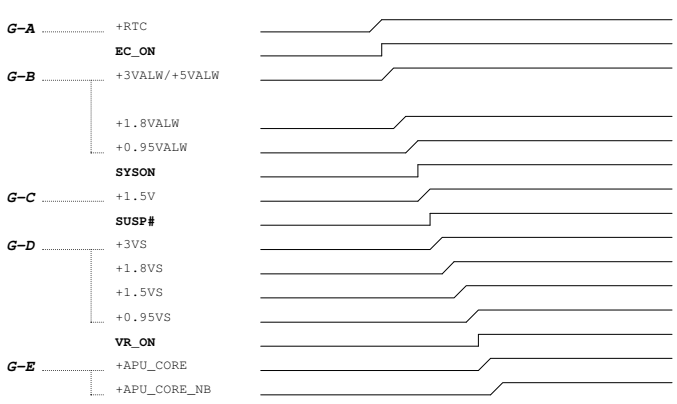

re check

ZZZ
PCB
Part Number = DAZ14C00100
PCB LA-A997P REV0 M/B

UAPU1_A8_6410@
CUP A8-6410
Part Number = SA00007TQ10
S IC A32 A8-6410 AM6410ITJ44JB 2G BGA769

UAPU1_A4_6210@
CPU A4-6210
Part Number = SA00007RA40
S IC A32 A4-6210 AM6210ITJ44JB 1.8G BGA

UAPU1_E1_6050@
CPU E1-6050
Part Number = SA00007IQ50
S IC A32 E1-6050 ZM1332M2J2370 1.35G BGA

UAPU1_E2_6200@
CPU E2-6200
Part Number = SA00007OQ20
S IC A32 E2-6200 EM6200ITJ44JB 1.5G BGA

UAPU1_A4_6300@
CPU A4-6300
Part Number = SA00007OP20
S IC A32 A4-6300 AM6300ITJ44JB 1.8G BGA

ZZZ
@HDMI
Part Number = RO0000003HM
PCB 102 LA-A997P REV0 M/B 2

UAPU1_E1_6010@
CPU E1-6010
Part Number = SA00007RC40
S IC A32 E1-6010 EM6010IUJ23JB 1.35G BGA

UAPU1_E2_6110@
CPU E2-6110
Part Number = SA00007RB30
S IC A32 E2-6110 EM6110ITJ44JB 1.5G BGA

UAPU1_A6_6400@
CUP A6-6400
Part Number = SA00007IP50
S IC A32 A6-6400 ZM18D703J4470 2.4G BGA

UAPU1_A8_6410_R3@
CUP A8-6410
Part Number = SA00007TQ20
S IC A8-6410 AM6410ITJ44JB 2G BGA A32!

UAPU1_A4_6210_R3@
CPU A4-6210
Part Number = SA00007RA60
S IC A32 A4-6210 AM6210ITJ44JB 1.8G BGA

UAPU1_E1_6010_R3@
CPU E1-6010
Part Number = SA00007RC60
S IC E1-6010 EM6010IUJ23JB 1.35G A32!

UAPU1_E2_6110_R3@
CPU E2-6110
Part Number = SA00007RB60
S IC A32 E2-6110 EM6110ITJ44JB 1.5G BGA

Security Classification	Compal Secret Data		
Issued Date	2013/02/26	Deciphered Date	2015/07/08

THIS SHEET OF ENGINEERING DRAWING IS THE PROPRIETARY PROPERTY OF COMPAL ELECTRONICS, INC. AND CONTAINS CONFIDENTIAL AND TRADE SECRET INFORMATION. THIS SHEET MAY NOT BE TRANSFERED FROM THE CUSTODY OF THE COMPETENT DIVISION OF R&D DEPARTMENT EXCEPT AS AUTHORIZED BY COMPAL ELECTRONICS, INC. NEITHER THIS SHEET NOR THE INFORMATION IT CONTAINS MAY BE USED BY OR DISCLOSED TO ANY THIRD PARTY WITHOUT PRIOR WRITTEN CONSENT OF COMPAL ELECTRONICS, INC.

Compal Electronics, Inc.

Title: NOTES LIST

Size: B | Document Number: LA-A997P | Rev: 1.0

Date: Tuesday, May 20, 2014 | Sheet 4 of 47

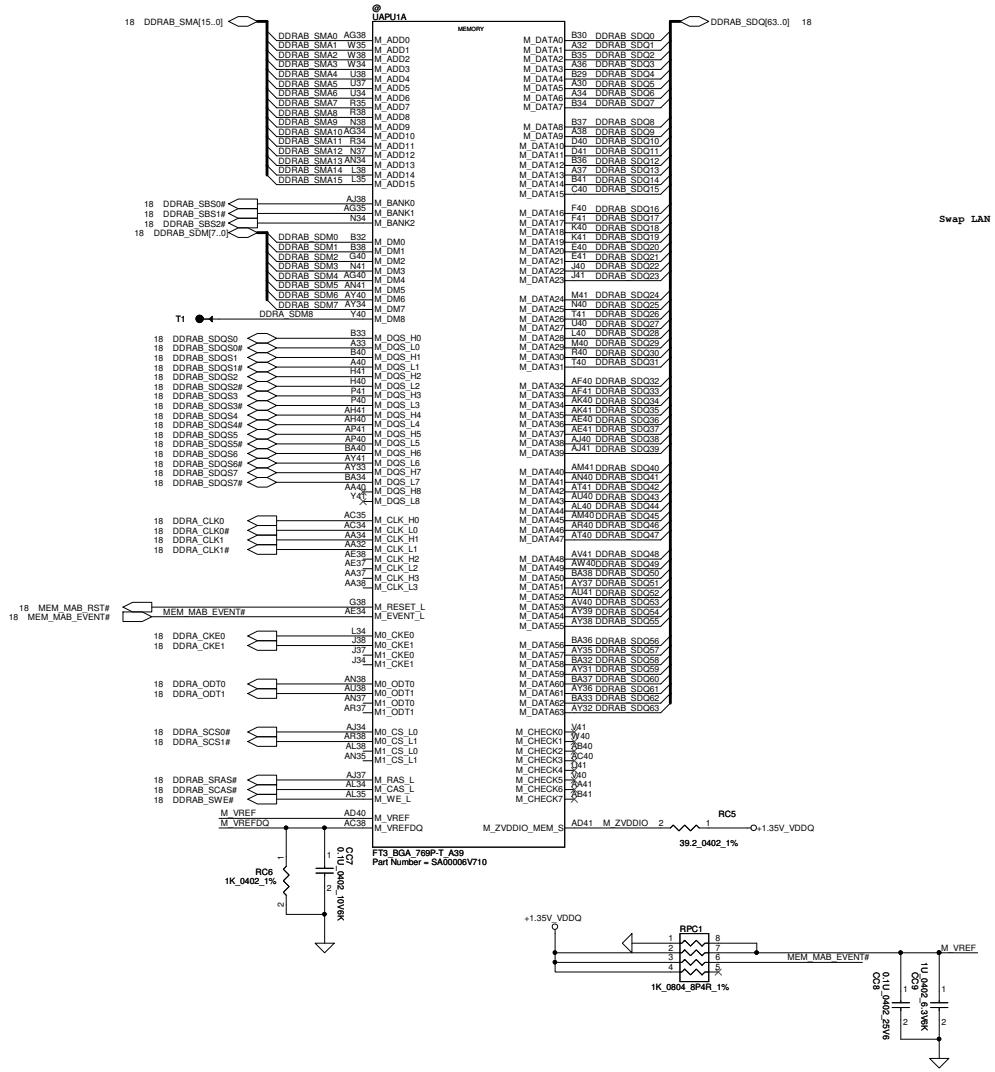

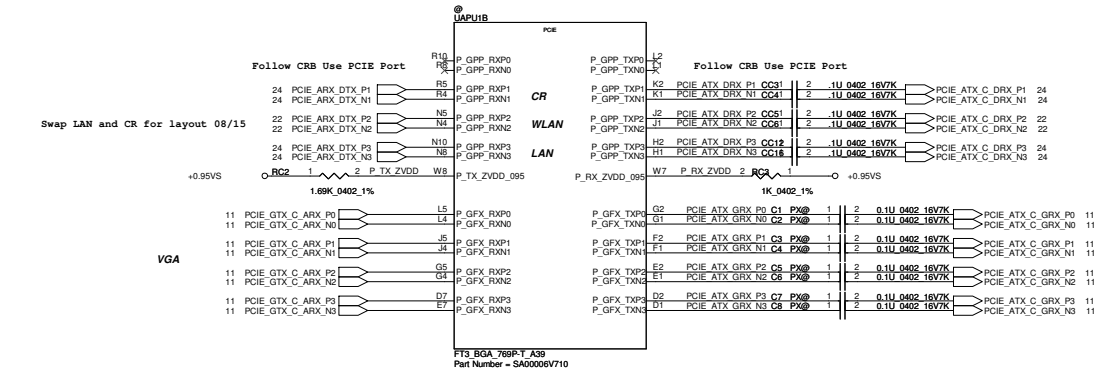

Security Classification	Compal Secret Data			Compal Electronics, Inc.
Issued Date	2013/02/26	Deciphered Date	2015/07/08	Title: MEM & PCIE

THIS SHEET OF ENGINEERING DRAWING IS THE PROPRIETARY PROPERTY OF COMPAL ELECTRONICS, INC. AND CONTAINS CONFIDENTIAL AND TRADE SECRET INFORMATION. THIS SHEET MAY NOT BE TRANSFERED FROM THE CUSTODY OF THE COMPETENT DIVISION OF R&D DEPARTMENT EXCEPT AS AUTHORIZED BY COMPAL ELECTRONICS, INC. NEITHER THIS SHEET NOR THE INFORMATION IT CONTAINS MAY BE USED BY OR DISCLOSED TO ANY THIRD PARTY WITHOUT PRIOR WRITTEN CONSENT OF COMPAL ELECTRONICS, INC.

Size	Document Number	Rev
Custom	LA-A997P	1.0

Date: Tuesday, May 20, 2014 Sheet 5 of 47

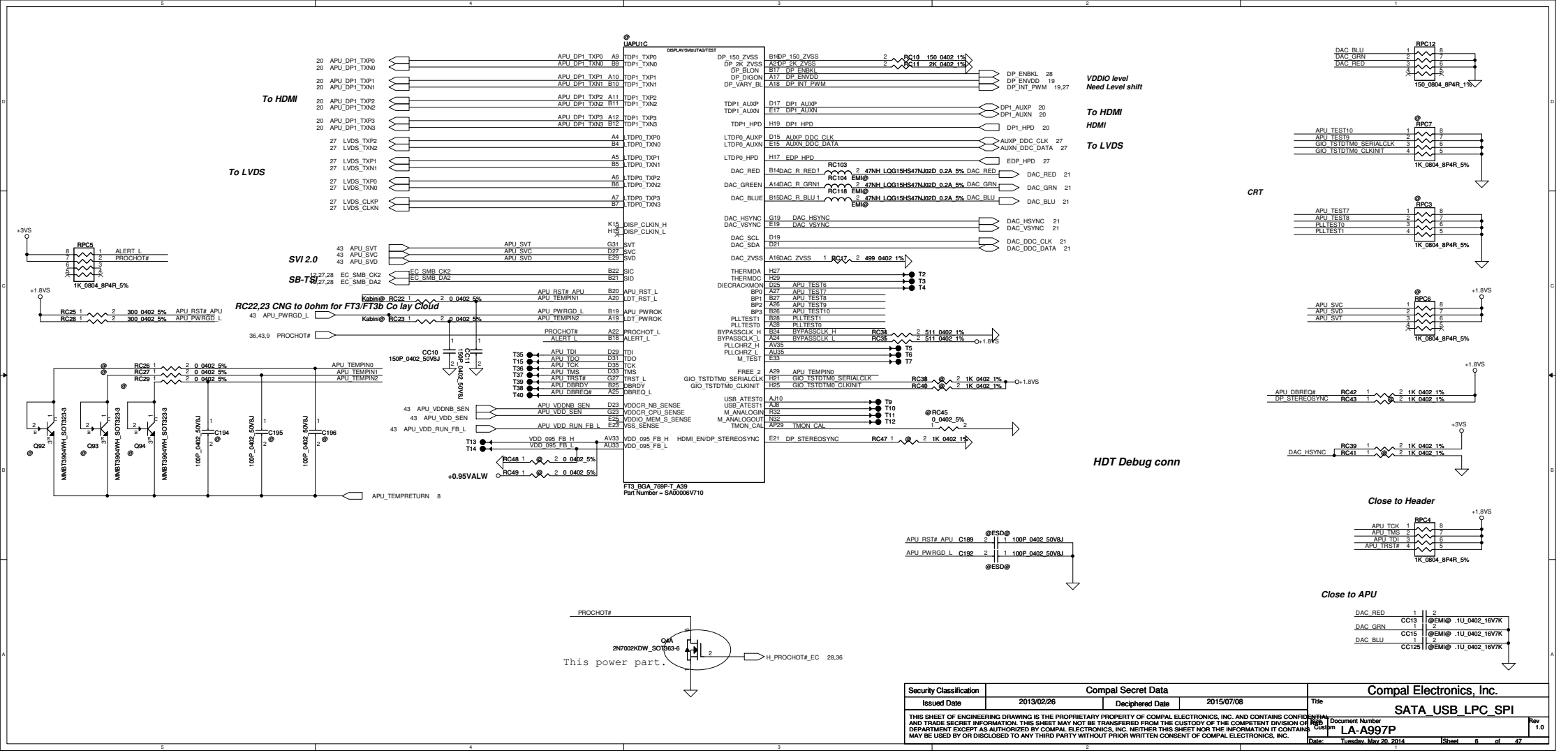

PROCHOT#

Q4A
2N7002KDW_SOT363-6

H_PROCHOT#_EC 28,36

This power part.

Security Classification	Compal Secret Data		
Issued Date	2013/02/26	Deciphered Date	2015/07/08

THIS SHEET OF ENGINEERING DRAWING IS THE PROPRIETARY PROPERTY OF COMPAL ELECTRONICS, INC. AND CONTAINS CONFIDENTIAL AND TRADE SECRET INFORMATION. THIS SHEET MAY NOT BE TRANSFERED FROM THE CUSTODY OF THE COMPETENT DIVISION OF R&D DEPARTMENT EXCEPT AS AUTHORIZED BY COMPAL ELECTRONICS, INC. NEITHER THIS SHEET NOR THE INFORMATION IT CONTAINS MAY BE USED BY OR DISCLOSED TO ANY THIRD PARTY WITHOUT PRIOR WRITTEN CONSENT OF COMPAL ELECTRONICS, INC.

Compal Electronics, Inc.

Title: SATA_USB_LPC_SPI

Size: Custom | Document Number: LA-A997P | Rev: 1.0

Date: Tuesday, May 20, 2014 | Sheet 6 of 47

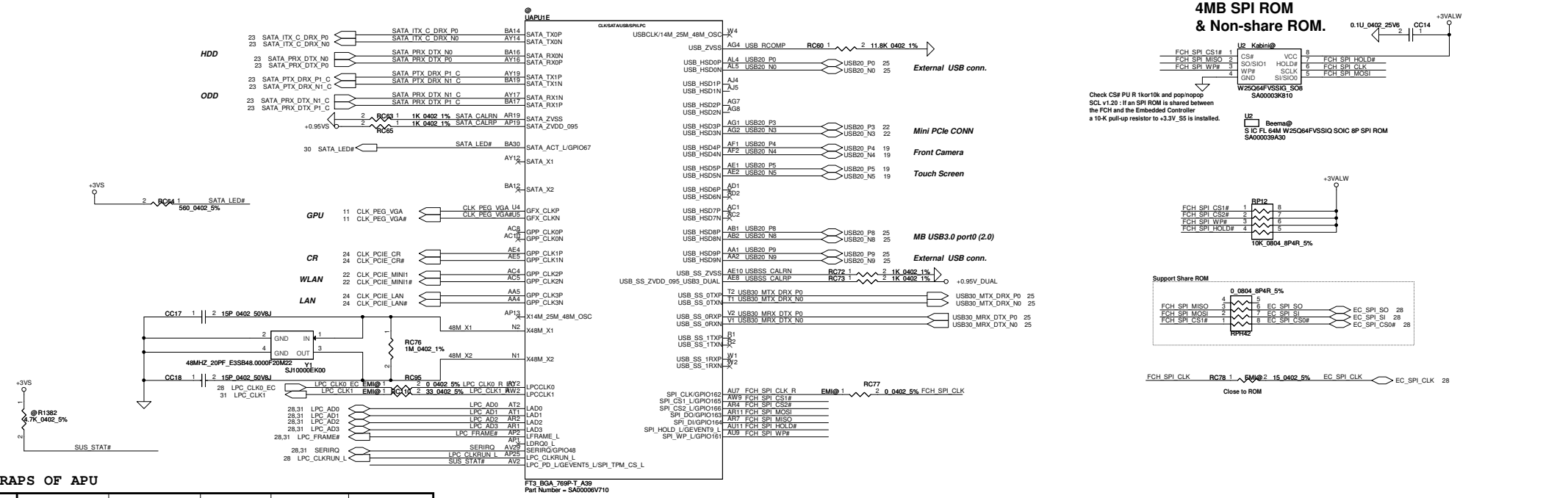

STRAPS OF APU

	LPC_FRAME#	LPC_CLK0_EC	LPC_CLK1	GEVENT2_L	RTC_CLK
H	SPI ROM (DEFAULT)	BOOT FAIL TIMER ENABLED	CLKGEN ENABLE (DEFAULT)	1.8V SPI ROM	NORMAL POWR UP/RESET TIMING (DEFAULT)
L	LPC ROM	BOOT FAIL TIMER DISABLED (DEFAULT)	CLKGEN DISABLED	3.3V SPI ROM (DEFAULT)	FAST POWER UP/RESET TIMING FOR SIMULATION

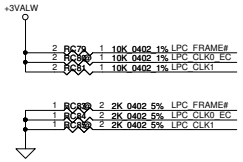

Security Classification	Compal Secret Data			Compal Electronics, Inc.
Issued Date	2013/02/26	Deciphered Date	2015/07/08	Title: SATA_USB_LPC_SPI

THIS SHEET OF ENGINEERING DRAWING IS THE PROPRIETARY PROPERTY OF COMPAL ELECTRONICS, INC. AND CONTAINS CONFIDENTIAL AND TRADE SECRET INFORMATION. THIS SHEET MAY NOT BE TRANSFERED FROM THE CUSTODY OF THE COMPETENT DIVISION OF R&D DEPARTMENT EXCEPT AS AUTHORIZED BY COMPAL ELECTRONICS, INC. NEITHER THIS SHEET NOR THE INFORMATION IT CONTAINS MAY BE USED BY OR DISCLOSED TO ANY THIRD PARTY WITHOUT PRIOR WRITTEN CONSENT OF COMPAL ELECTRONICS, INC.

Document Number: LA-A997P | Rev: 1.0 | Date: Tuesday, May 20, 2014 | Sheet 7 of 47

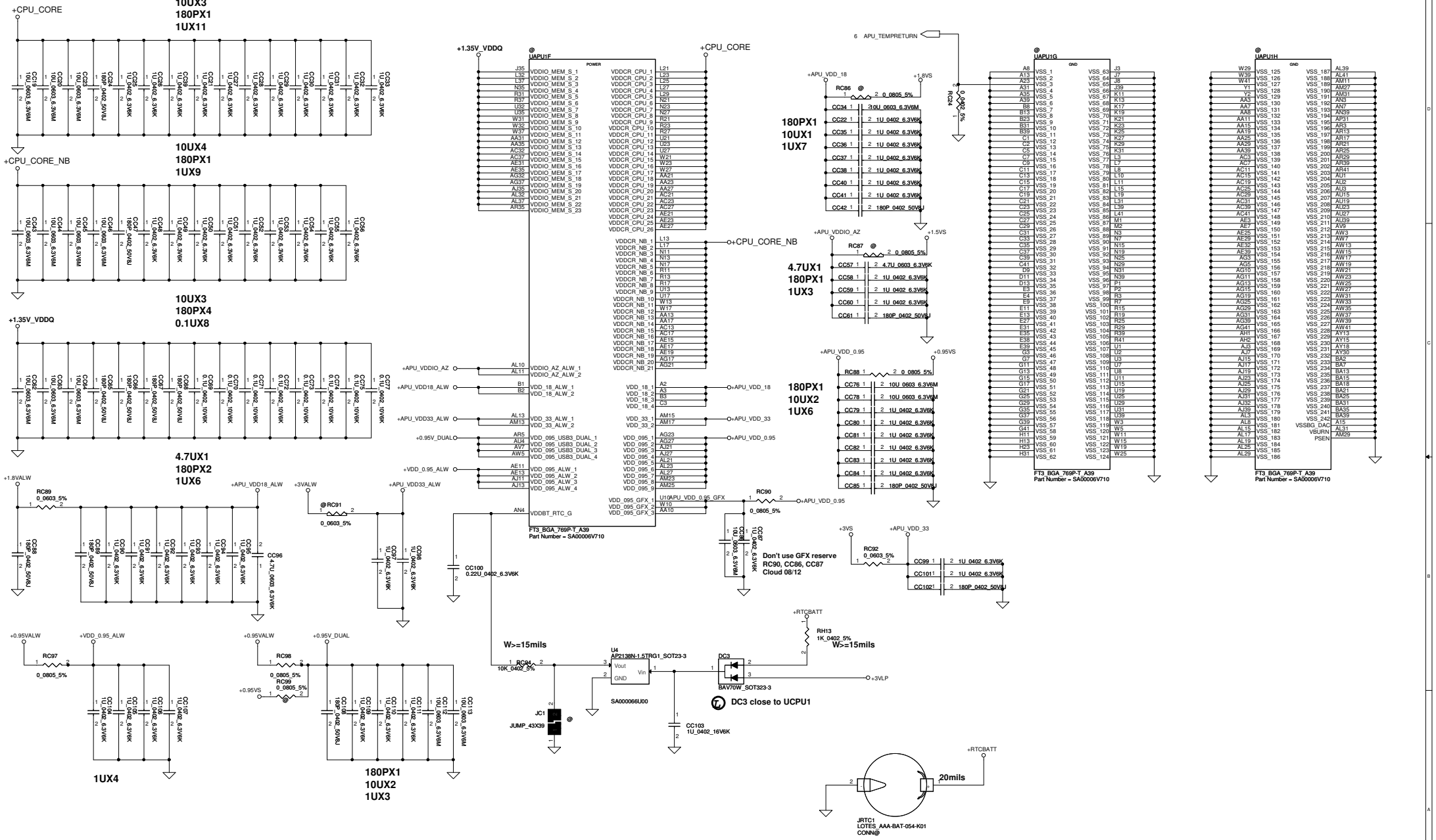

Security Classification	Compal Secret Data		
Issued Date	2013/02/26	Deciphered Date	2015/07/08

THIS SHEET OF ENGINEERING DRAWING IS THE PROPRIETARY PROPERTY OF COMPAL ELECTRONICS, INC. AND CONTAINS CONFIDENTIAL AND TRADE SECRET INFORMATION. THIS SHEET MAY NOT BE TRANSFERED FROM THE CUSTODY OF THE COMPETENT DIVISION OR DEPARTMENT EXCEPT AS AUTHORIZED BY COMPAL ELECTRONICS, INC. NEITHER THIS SHEET NOR THE INFORMATION IT CONTAINS MAY BE USED BY OR DISCLOSED TO ANY THIRD PARTY WITHOUT PRIOR WRITTEN CONSENT OF COMPAL ELECTRONICS, INC.

Compal Electronics, Inc.

Title: POWER & DECOUPLING

Size: Custom | Document Number: LA-A997P | Rev: 1.0

Date: Tuesday, May 20, 2014 | Sheet 8 of 47

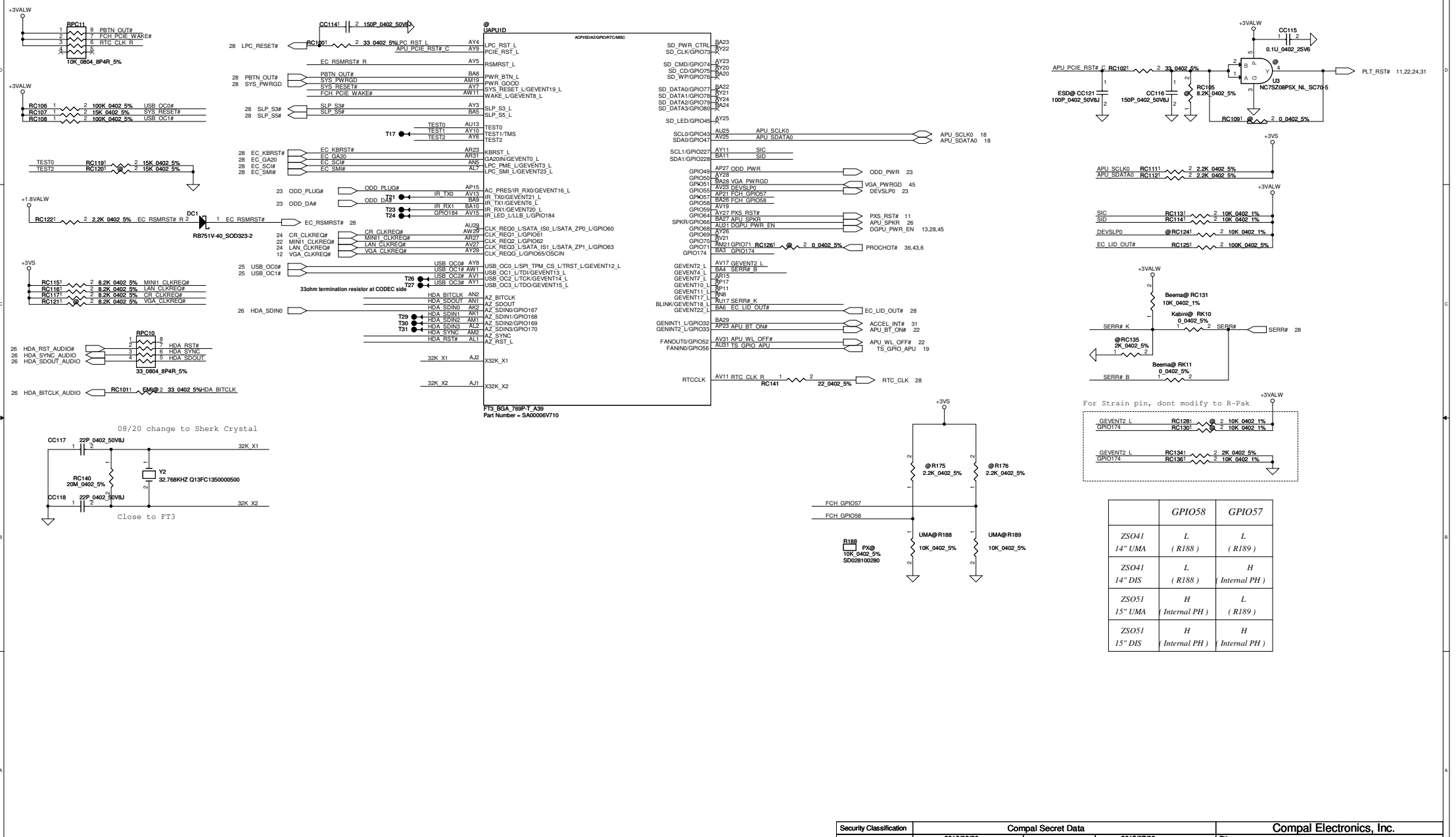

	GPIO58	GPIO57
ZSO41 14" UMA	L (R188)	L (R189)
ZSO41 14" DIS	L (R188)	H (Internal PH)
ZSO51 15" UMA	H (Internal PH)	L (R189)
ZSO51 15" DIS	H (Internal PH)	H (Internal PH)

Security Classification	Compal Secret Data			Compal Electronics, Inc.
Issued Date	2013/02/26	Deciphered Date	2015/07/08	Title: GEVENT_GPIO_SD

THIS SHEET OF ENGINEERING DRAWING IS THE PROPRIETARY PROPERTY OF COMPAL ELECTRONICS, INC. AND CONTAINS CONFIDENTIAL AND TRADE SECRET INFORMATION. THIS SHEET MAY NOT BE TRANSFERED FROM THE CUSTODY OF THE COMPETENT DIVISION OF R&D DEPARTMENT EXCEPT AS AUTHORIZED BY COMPAL ELECTRONICS, INC. NEITHER THIS SHEET NOR THE INFORMATION IT CONTAINS MAY BE USED BY OR DISCLOSED TO ANY THIRD PARTY WITHOUT PRIOR WRITTEN CONSENT OF COMPAL ELECTRONICS, INC.

Size: Custom | Document Number: LA-A997P | Rev: 1.0

Date: Tuesday, May 20, 2014 | Sheet 9 of 47

Panel ENBKL

Panel ENVDD

Panel PWM

Security Classification	Compal Secret Data		
Issued Date	2013/02/26	Deciphered Date	2015/07/08

THIS SHEET OF ENGINEERING DRAWING IS THE PROPRIETARY PROPERTY OF COMPAL ELECTRONICS, INC. AND CONTAINS CONFIDENTIAL AND TRADE SECRET INFORMATION. THIS SHEET MAY NOT BE TRANSFERED FROM THE CUSTODY OF THE COMPETENT DIVISION OF R&D DEPARTMENT EXCEPT AS AUTHORIZED BY COMPAL ELECTRONICS, INC. NEITHER THIS SHEET NOR THE INFORMATION IT CONTAINS MAY BE USED BY OR DISCLOSED TO ANY THIRD PARTY WITHOUT PRIOR WRITTEN CONSENT OF COMPAL ELECTRONICS, INC.

Title: Level Shifter

Size: Custom | Document Number: LA-A997P | Rev: 1.0

Date: Tuesday, May 20, 2014 | Sheet 10 of 47

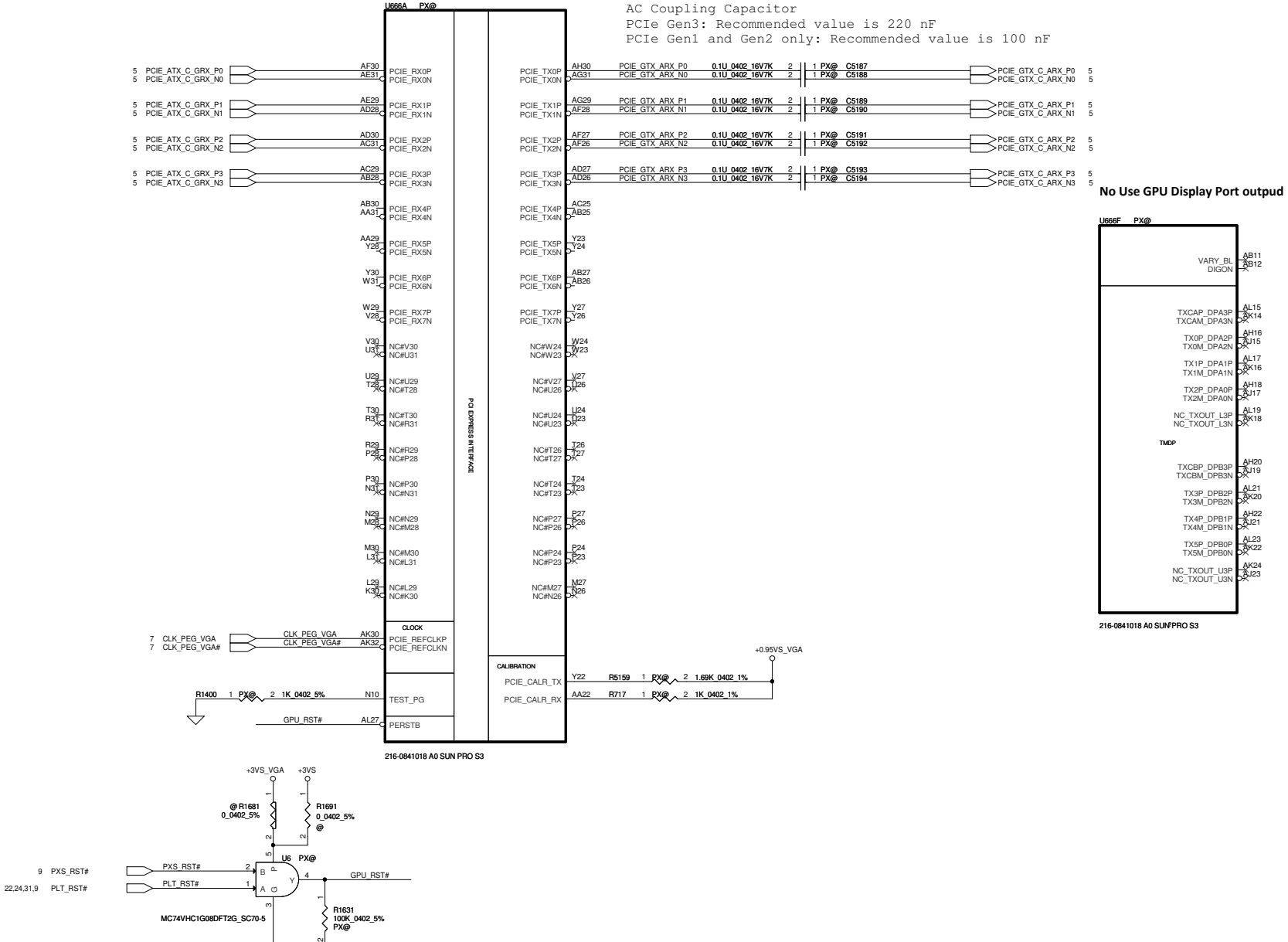

Security Classification	Compal Secret Data		
Issued Date	2013/01/11	Deciphered Date	2013/12/31

THIS SHEET OF ENGINEERING DRAWING IS THE PROPRIETARY PROPERTY OF COMPAL ELECTRONICS, INC. AND CONTAINS CONFIDENTIAL AND TRADE SECRET INFORMATION. THIS SHEET MAY NOT BE TRANSFERED FROM THE CUSTODY OF THE COMPETENT DIVISION OF R&D DEPARTMENT EXCEPT AS AUTHORIZED BY COMPAL ELECTRONICS, INC. NEITHER THIS SHEET NOR THE INFORMATION IT CONTAINS MAY BE USED BY OR DISCLOSED TO ANY THIRD PARTY WITHOUT PRIOR WRITTEN CONSENT OF COMPAL ELECTRONICS, INC.

Compal Electronics, Inc.

Title: **SUN_PCIE/DP**

Size: Custom | Document Number: **LA-A997P** | Rev: 1.0

Date: Tuesday, May 20, 2014 | Sheet 11 of 47

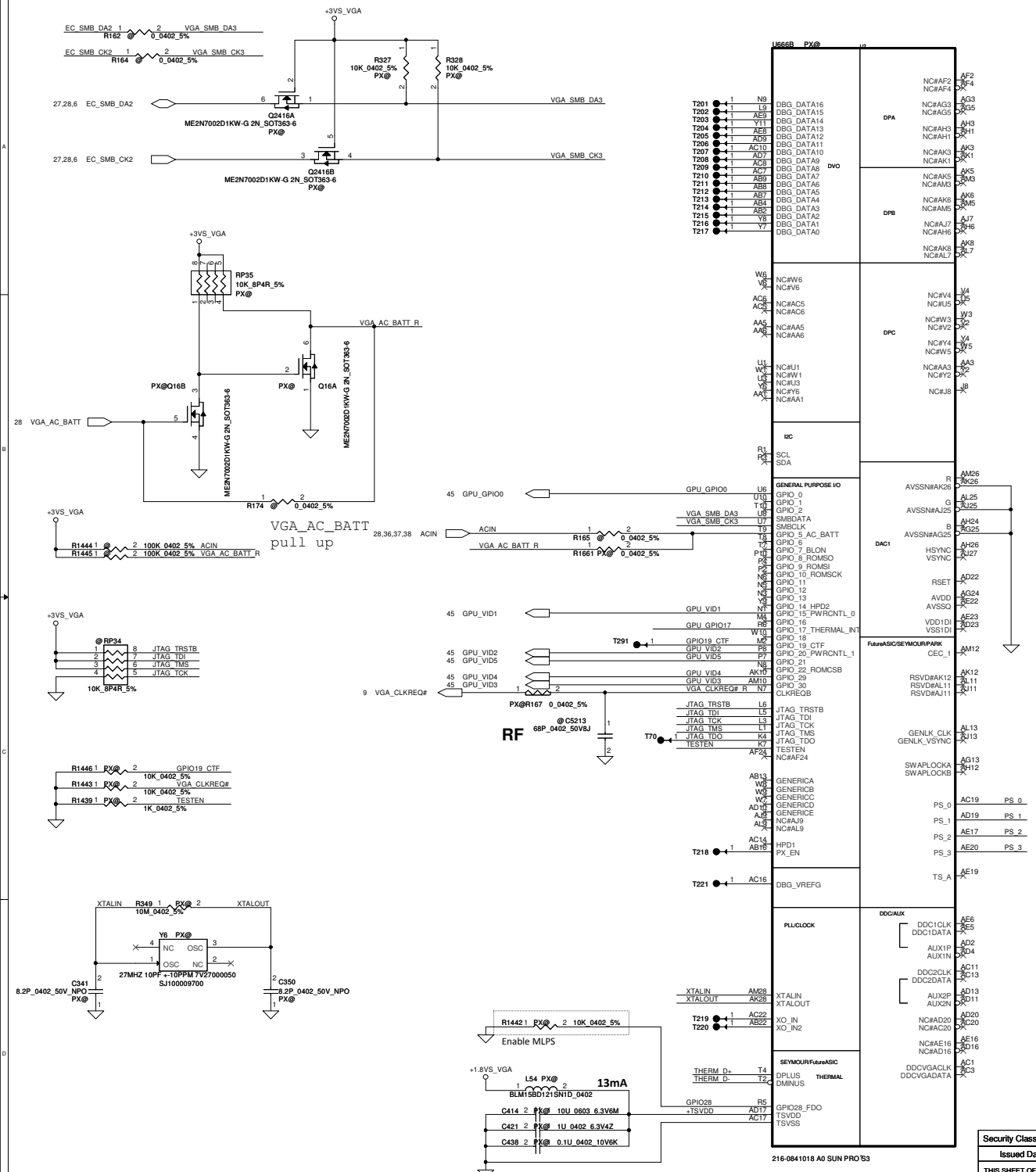

Resistor Divider Lookup Lable		
R_pu (ohm)	R_pd (ohm)	Bitd [3:1]
NC	4.75k	000
8.45k	2k	001
4.53k	2k	010
6.98k	4.99k	011
4.53k	4.99k	100
3.24k	5.62k	101
3.4k	10k	110
4.75k	NC	111

0402 1% resistors are equired

Capacitor Divider Lookup Lable	
Cap (nF)	Bitd [5:4]
680nF	00
82nF	01
10nF	10
NC	11

ZZZ SAM_1G@ 1G SAMSUNG X7654132L13

ZZZ HYX_1G@ 1G HYNIX X7654132L02

ZZZ MIC_1G@ 1G MICRON X7654132L03

ZZZ SAM_2G@ 2G SAMSUNG X7654132L04

ZZZ MIC_2G@ 2G MICRON X7654132L05

ZZZ HYX_2G@ 2G HYNIX X7654132L14

PS_0[3:1]=001
PS_0[5:4]=11
+1.8VS_VGA
PX@ R5165 8.45K_0402_1%
PS_0
C=NC
PX@ R5166 2K_0402_1%

Strap Name :

PS_0[1] ROM_CONFIG[0]
PS_0[2] ROM_CONFIG[1]
PS_0[3] ROM_CONFIG[2]
PS_0[4] N/A
PS_0[5] AUD_PORT_CONN_PINSTRAP[0]

PS_1[3:1]=000
PS_1[5:4]=11
+1.8VS_VGA
@ R5167 8.45K_0402_1%
PS_1
C=NC
PX@ R5168 4.75K_0402_1%

Strap Name :

PS_1[1] STRAP_BIF_GEN3_EN_A
PS_1[2] TRAP_BIF_CLK_PM_EN
PS_1[3] N/A
PS_1[4] STRAP_TX_CFG_DRV_FULL_SWING
PS_1[5] STRAP_TX_DEEMPH_EN

PS_2[3:1]=000
PS_2[5:4]=11
+1.8VS_VGA
R=NC
PS_2
C5203 0.082U_0402_16V6K
PX@ R5164 4.75K_0402_1%

Strap Name :

PS_2[1] N/A
PS_2[2] N/A
PS_2[3] STRAP_BIOS_ROM_EN
PS_2[4] STRAP_BIF_VGA_DIS
PS_2[5] N/A

PS_3[3:1]=000
PS_3[5:4]=11
+1.8VS_VGA
@ R5174 8.45K_0402_1%
PS_3
C=NC
@ R5169 2K_0402_1%

Strap Name :

PS_3[1] BOARD_CONFIG[0] (Memory ID)
PS_3[2] BOARD_CONFIG[1] (Memory ID)
PS_3[3] BOARD_CONFIG[2] (Memory ID)
PS_3[4] AUD_PORT_CONN_PINSTRAP[1]
PS_3[5] AUD_PORT_CONN_PINSTRAP[2]

Memory ID	Memory Type	Configuration	Size	R5174	R5169	X76 P/N
000	SA000068U40	Samsung K4W2G1646E-BC1A	1GB	NC	4.75K	X7654132L01
001	SA000067500	Micron MT41J128M16JT-093G:K	1GB	8.45K	2K	X7654132L03
010	SA00006H400	Hynix H5TC2G63FFR-11C	1GB	4.53K	2K	X7654132L02
011	SA000076P00	Samsung K4W4G1646D-BC1A	2GB	6.98K	4.99K	X7654132L04
100	SA000077K00	Micron MT41J256M16HA-093G:E	2GB	4.53K	4.99K	X7654132L05
101	SA00006E800	Hynix H5TC4G63AFR-11C	2GB	3.24K	5.62K	X7654132L06

(default)

External VGA Thermal Sensor

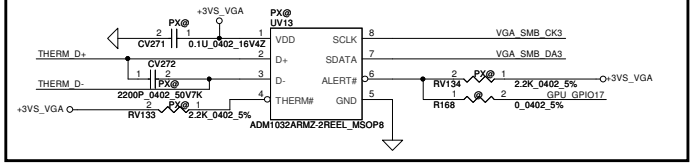

Security Classification	Compal Secret Data		
Issued Date	2013/01/11	Deciphered Date	2013/12/31

THIS SHEET OF ENGINEERING DRAWING IS THE PROPRIETARY PROPERTY OF COMPAL ELECTRONICS, INC. AND CONTAINS CONFIDENTIAL AND TRADE SECRET INFORMATION. THIS SHEET MAY NOT BE TRANSFERED FROM THE CUSTODY OF THE COMPETENT DIVISION OF R&D DEPARTMENT EXCEPT AS AUTHORIZED BY COMPAL ELECTRONICS, INC. NEITHER THIS SHEET NOR THE INFORMATION IT CONTAINS MAY BE USED BY OR DISCLOSED TO ANY THIRD PARTY WITHOUT PRIOR WRITTEN CONSENT OF COMPAL ELECTRONICS, INC.

Compal Electronics, Inc.

Title: SUN_MSIC

Size: Custom | Document Number: LA-A997P | Rev: 1.0

Date: Tuesday, May 20, 2014 | Sheet 12 of 47

+1.5VS to +1.5VS_VGA (2.096A)

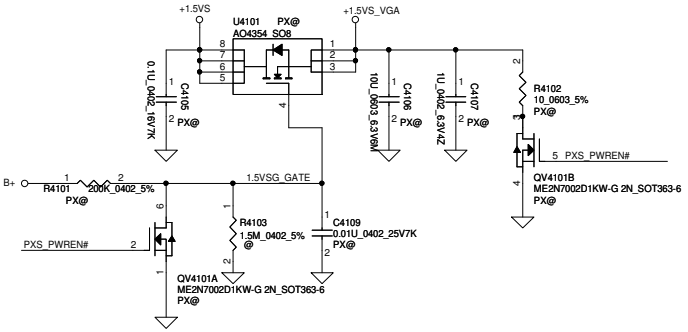

+3VS to +3VS_VGA (25mA)

+1.8VALW to +1.8VS_VGA (311mA)

+1.8VS_VGA 必須比 +VGA_CORE晚起來

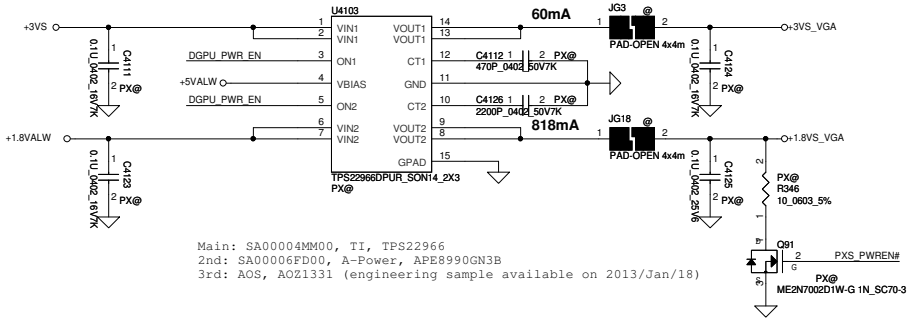

Main: SA00004MM00, TI, TPS22966
2nd: SA00006FD00, A-Power, APE8990GN3B
3rd: AOS, AOZ1331 (engineering sample available on 2013/Jan/18)

+0.95VALW to +0.95VSG (4.016A)

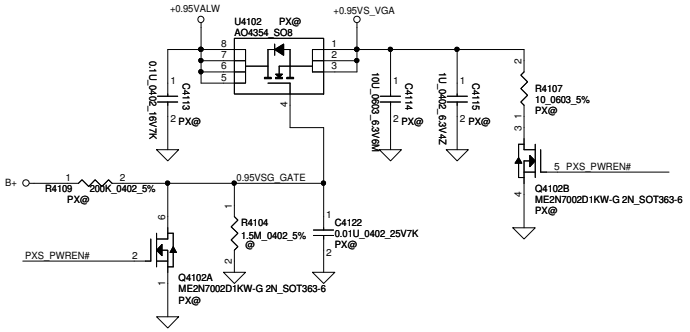

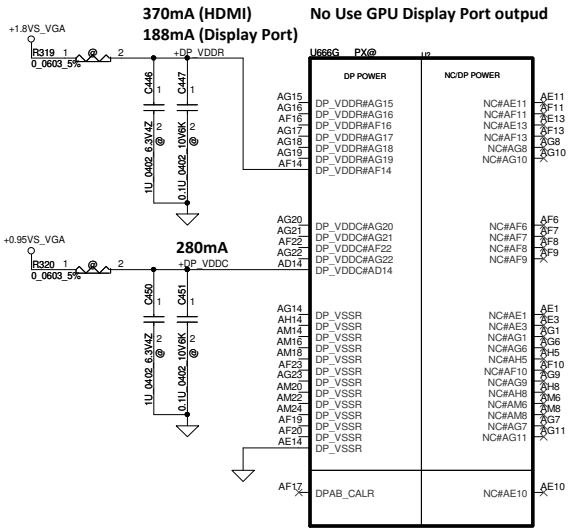

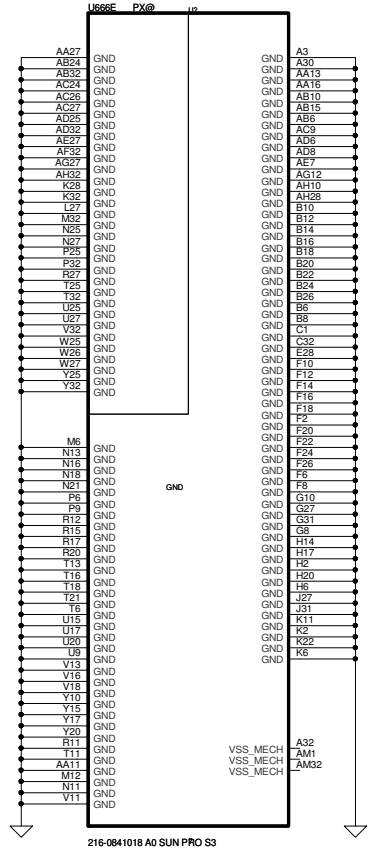

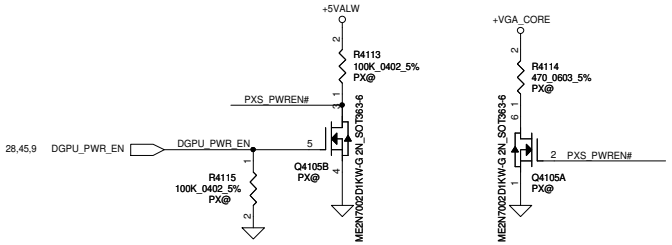

Security Classification	Compal Secret Data		
Issued Date	2013/01/11	Deciphered Date	2013/12/31

THIS SHEET OF ENGINEERING DRAWING IS THE PROPRIETARY PROPERTY OF COMPAL ELECTRONICS, INC. AND CONTAINS CONFIDENTIAL AND TRADE SECRET INFORMATION. THIS SHEET MAY NOT BE TRANSFERED FROM THE CUSTODY OF THE COMPETENT DIVISION OF R&D DEPARTMENT EXCEPT AS AUTHORIZED BY COMPAL ELECTRONICS, INC. NEITHER THIS SHEET NOR THE INFORMATION IT CONTAINS MAY BE USED BY OR DISCLOSED TO ANY THIRD PARTY WITHOUT PRIOR WRITTEN CONSENT OF COMPAL ELECTRONICS, INC.

Compal Electronics, Inc.

Title: **SUN_Power/GND**

Size: Custom | Document Number: **LA-A997P** | Rev: 1.0

Date: Tuesday, May 20, 2014 | Sheet 13 of 47

+VGA_CORE		10uF	1uF	0.1uF
VDDC	TBD	5 (1@)	10 (2@)	0
VDDCI	3.5A	1	3	0

+0.95VS_VGA		10uF	1uF	0.1uF
PCIE_VDDC	2.5A	2 (1@)	5 (1@)	0
BIF_VDDC	1.4A	0	0	0
SPLL_VDDC	100mA	1	1	1

+1.5VS_VGA		10uF	1uF	0.1uF
VDDR1	1.5A	3	5	5

+1.8VS_VGA		10uF	1uF	0.1uF
PCIE_PVDD	100mA	1	1	1
MPLL_PVDD	130mA	1	1	1
SPLL_PVDD	75mA	1	1	1
VDDR4	(300mA)	0	0	0
VDD_CT	13mA	1	1	1
+TSVDD	13mA	1	1	1
+DP_VDDR		0	0	0
+DP_VDDC		0	0	0

+3VS_VGA		10uF	1uF	0.1uF
VDDR3	25mA	0	2 (1@)	1

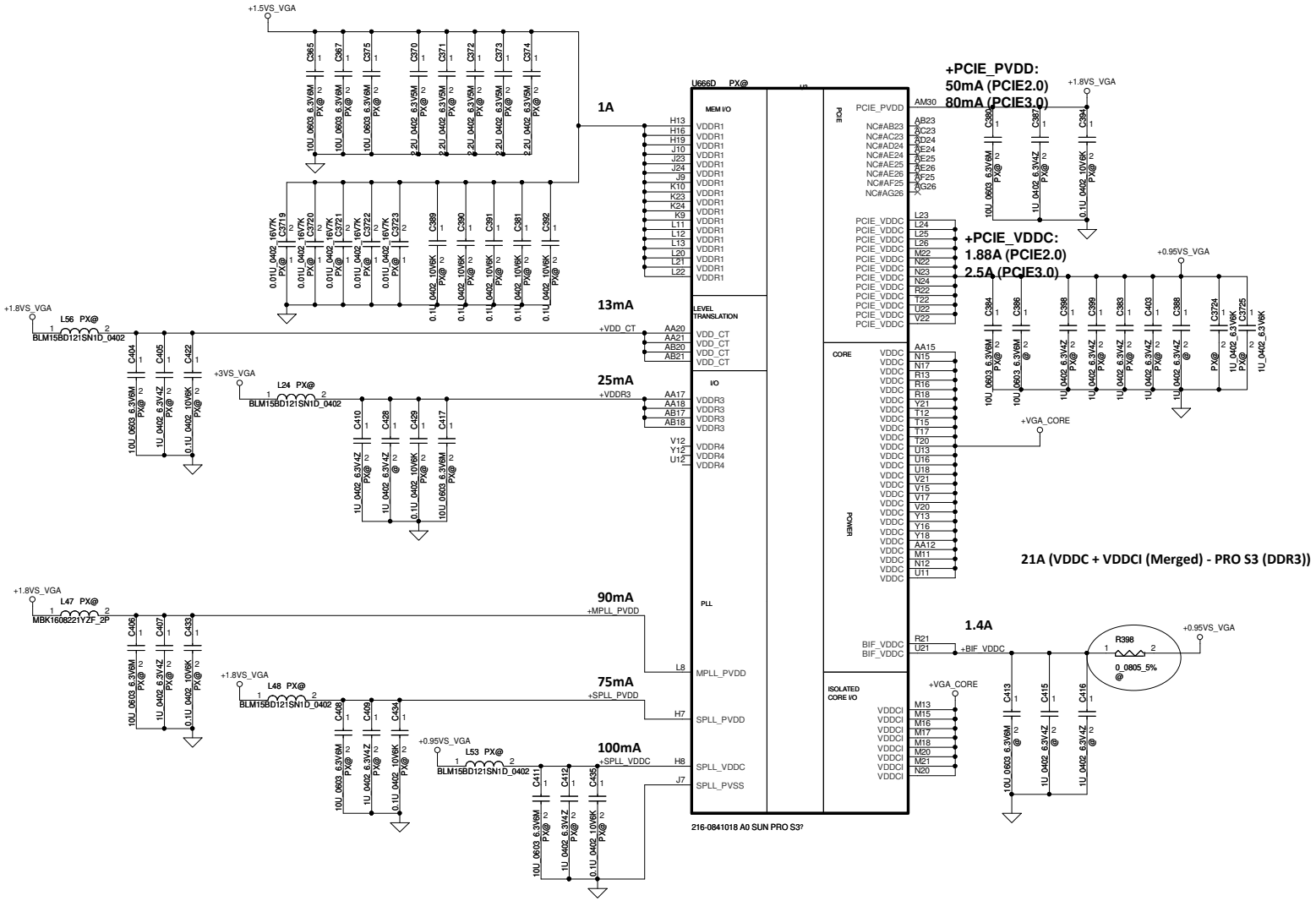

Security Classification	Compal Secret Data		
Issued Date	2013/01/11	Deciphered Date	2013/12/31

THIS SHEET OF ENGINEERING DRAWING IS THE PROPRIETARY PROPERTY OF COMPAL ELECTRONICS, INC. AND CONTAINS CONFIDENTIAL AND TRADE SECRET INFORMATION. THIS SHEET MAY NOT BE TRANSFERED FROM THE CUSTODY OF THE COMPETENT DIVISION OF R&D DEPARTMENT EXCEPT AS AUTHORIZED BY COMPAL ELECTRONICS, INC. NEITHER THIS SHEET NOR THE INFORMATION IT CONTAINS MAY BE USED BY OR DISCLOSED TO ANY THIRD PARTY WITHOUT PRIOR WRITTEN CONSENT OF COMPAL ELECTRONICS, INC.

Compal Electronics, Inc.

Title: SUN_Power

Size: Custom | Document Number: LA-A997P | Rev: 1.0

Date: Tuesday, May 20, 2014 | Sheet 14 of 47

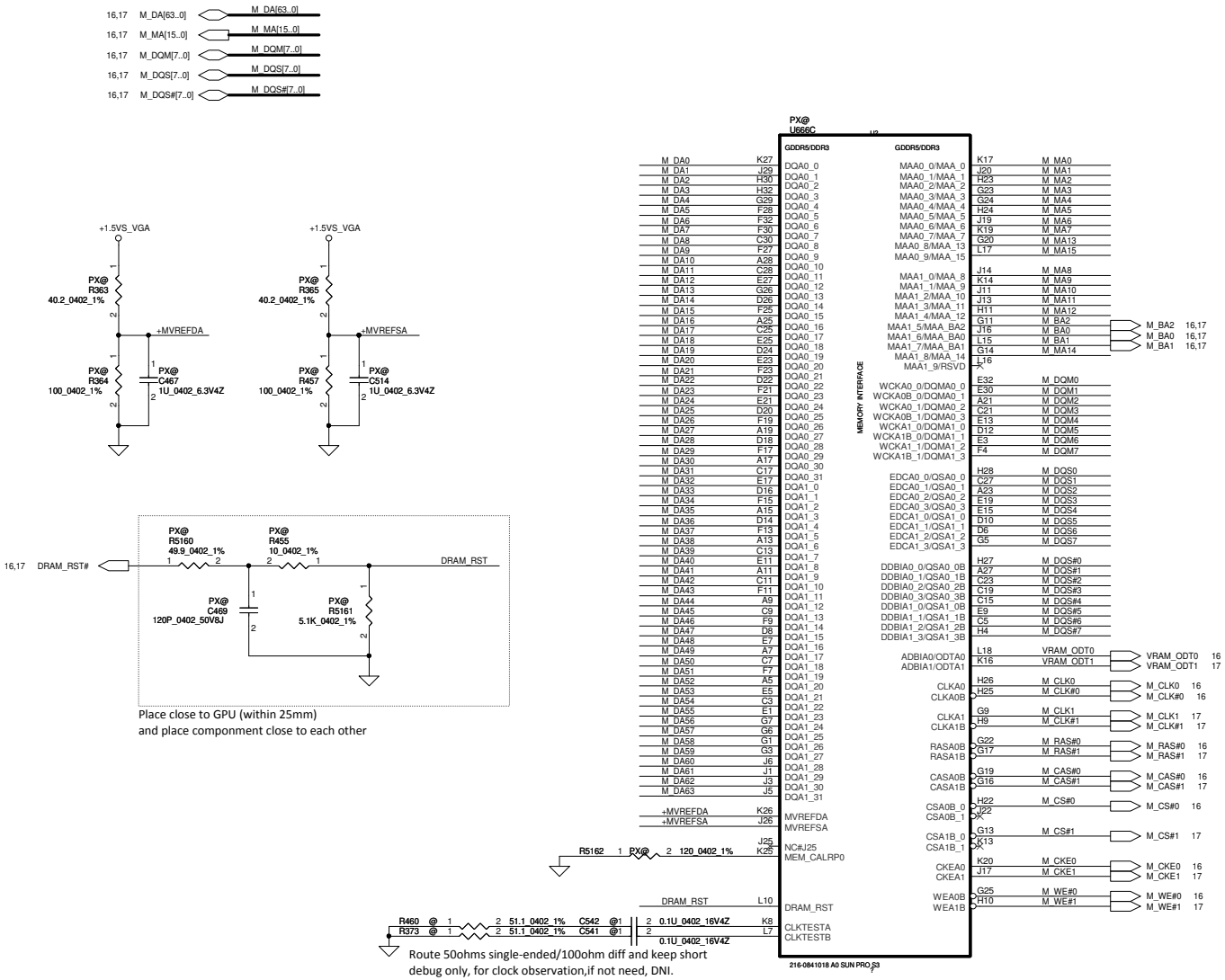

Security Classification	Compal Secret Data		
Issued Date	2013/01/11	Deciphered Date	2013/12/31

THIS SHEET OF ENGINEERING DRAWING IS THE PROPRIETARY PROPERTY OF COMPAL ELECTRONICS, INC. AND CONTAINS CONFIDENTIAL AND TRADE SECRET INFORMATION. THIS SHEET MAY NOT BE TRANSFERED FROM THE CUSTODY OF THE COMPETENT DIVISION OF R&D DEPARTMENT EXCEPT AS AUTHORIZED BY COMPAL ELECTRONICS, INC. NEITHER THIS SHEET NOR THE INFORMATION IT CONTAINS MAY BE USED BY OR DISCLOSED TO ANY THIRD PARTY WITHOUT PRIOR WRITTEN CONSENT OF COMPAL ELECTRONICS, INC.

Compal Electronics, Inc.

Title: **SUN_MEM**

Size: Custom | Document Number: **LA-A997P** | Rev: 1.0

Date: Tuesday, May 20, 2014 | Sheet 15 of 47

Memory Partition A - Lower 32 bits

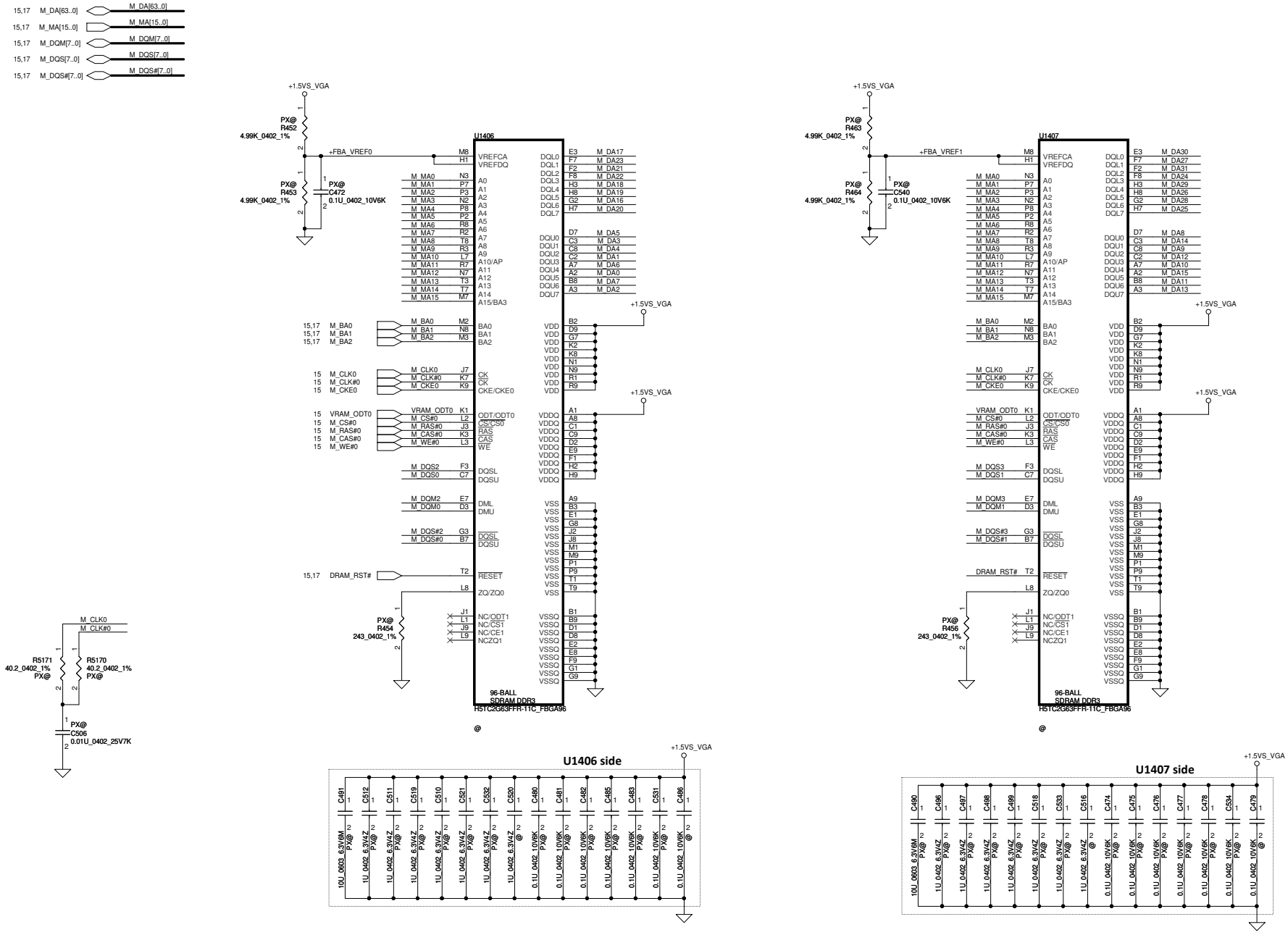

Security Classification	Compal Secret Data		
Issued Date	2013/01/11	Deciphered Date	2013/12/31

THIS SHEET OF ENGINEERING DRAWING IS THE PROPRIETARY PROPERTY OF COMPAL ELECTRONICS, INC. AND CONTAINS CONFIDENTIAL AND TRADE SECRET INFORMATION. THIS SHEET MAY NOT BE TRANSFERED FROM THE CUSTODY OF THE COMPETENT DIVISION OF R&D DEPARTMENT EXCEPT AS AUTHORIZED BY COMPAL ELECTRONICS, INC. NEITHER THIS SHEET NOR THE INFORMATION IT CONTAINS MAY BE USED BY OR DISCLOSED TO ANY THIRD PARTY WITHOUT PRIOR WRITTEN CONSENT OF COMPAL ELECTRONICS, INC.

Compal Electronics, Inc.

Title: **SUN_VRAM A Lower**

Size: Custom | Document Number: **LA-A997P** | Rev: 1.0

Date: Tuesday, May 20, 2014 | Sheet 16 of 47

Memory Partition A - Upper 32 bits

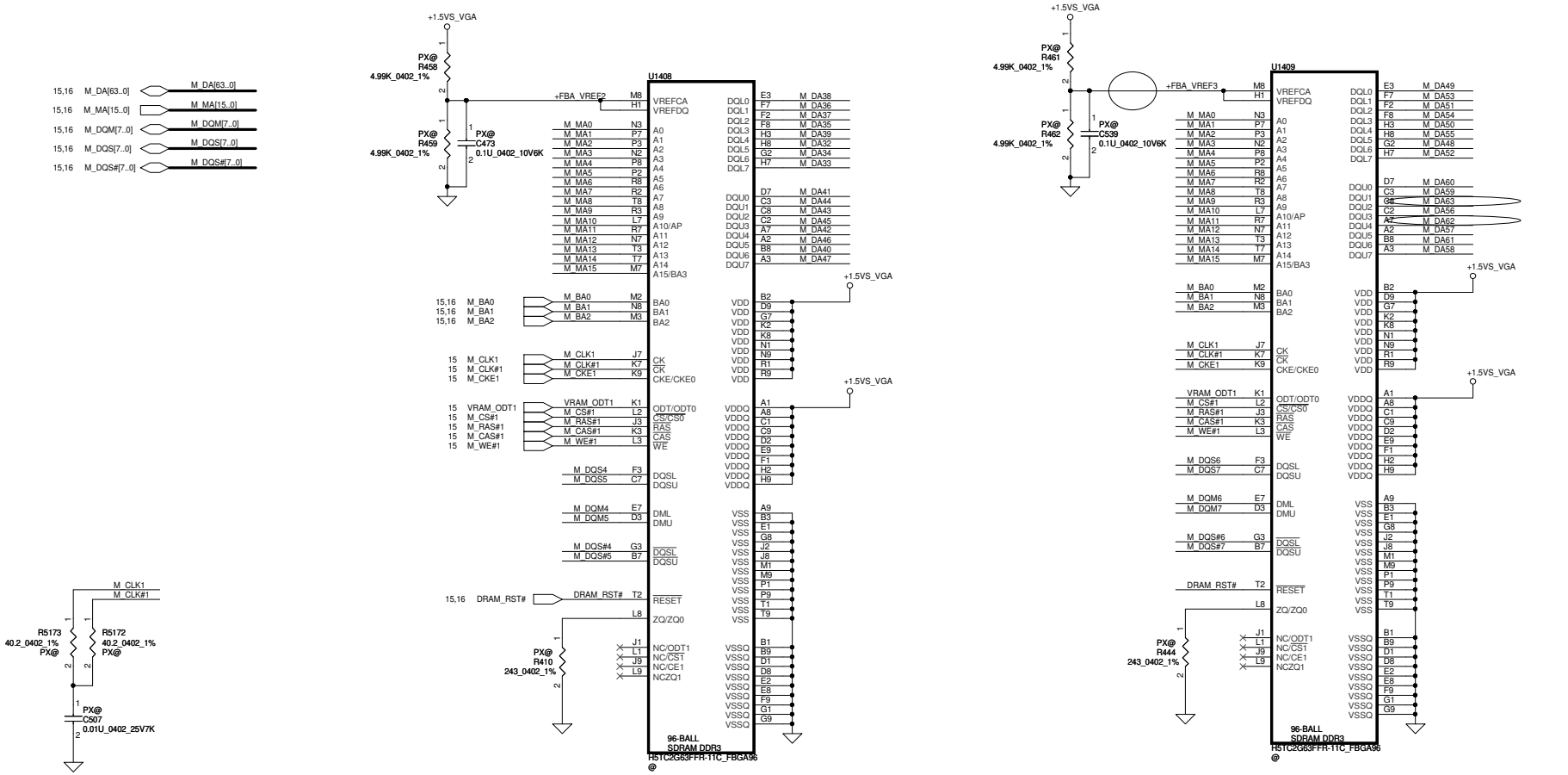

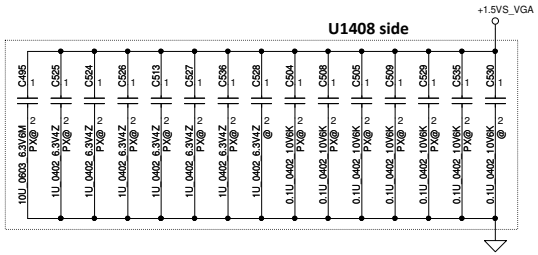

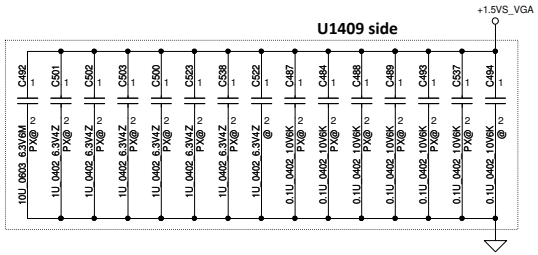

Security Classification	Compal Secret Data		
Issued Date	2013/01/11	Deciphered Date	2013/12/31

THIS SHEET OF ENGINEERING DRAWING IS THE PROPRIETARY PROPERTY OF COMPAL ELECTRONICS, INC. AND CONTAINS CONFIDENTIAL AND TRADE SECRET INFORMATION. THIS SHEET MAY NOT BE TRANSFERED FROM THE CUSTODY OF THE COMPETENT DIVISION OF R&D DEPARTMENT EXCEPT AS AUTHORIZED BY COMPAL ELECTRONICS, INC. NEITHER THIS SHEET NOR THE INFORMATION IT CONTAINS MAY BE USED BY OR DISCLOSED TO ANY THIRD PARTY WITHOUT PRIOR WRITTEN CONSENT OF COMPAL ELECTRONICS, INC.

Compal Electronics, Inc.

Title: **SUN_VRAM A Upper**

Size: Custom | Document Number: **LA-A997P** | Rev: 1.0

Date: Tuesday, May 20, 2014 | Sheet 17 of 47

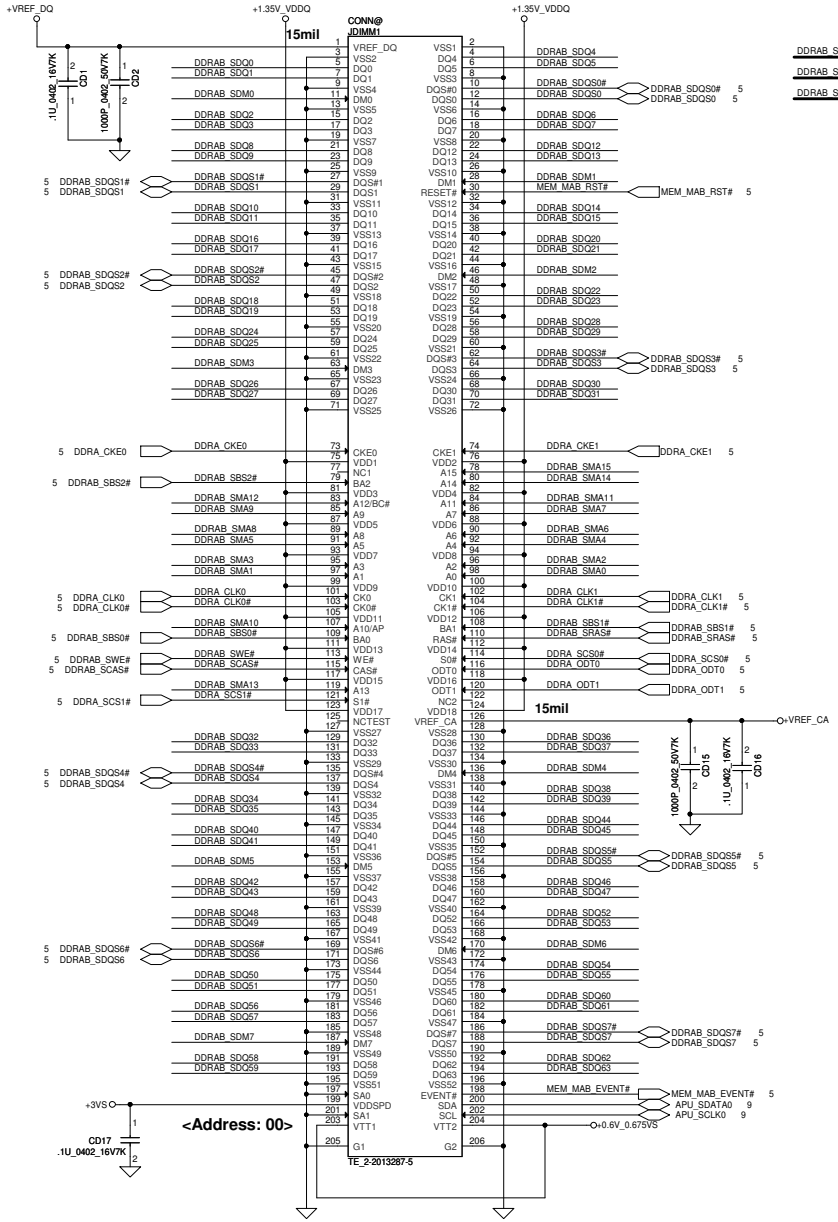

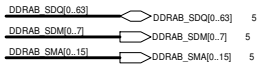

+1.35V_VDDQ/+0.675VS OF DIMM1

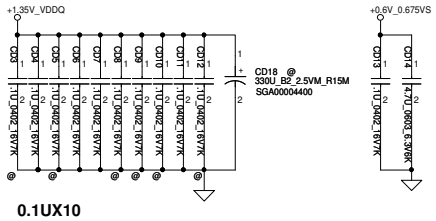

VREF for DIMM1

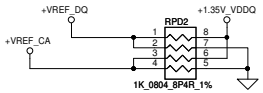

DIMM_1 H:4mm Reverse

Security Classification	Compal Secret Data			Compal Electronics, Inc.
Issued Date	2013/02/26	Deciphered Date	2015/07/08	Title: DDR3 SODIMM Socket
				Size: C; Document Number: LA-A997P; Rev: 1.0
				Date: Tuesday, May 20, 2014; Sheet 18 of 47

THIS SHEET OF ENGINEERING DRAWING IS THE PROPRIETARY PROPERTY OF COMPAL ELECTRONICS, INC. AND CONTAINS CONFIDENTIAL AND TRADE SECRET INFORMATION. THIS SHEET MAY NOT BE TRANSFERED FROM THE CUSTODY OF THE COMPETENT DIVISION OF R&D DEPARTMENT EXCEPT AS AUTHORIZED BY COMPAL ELECTRONICS, INC. NEITHER THIS SHEET NOR THE INFORMATION IT CONTAINS MAY BE USED BY OR DISCLOSED TO ANY THIRD PARTY WITHOUT PRIOR WRITTEN CONSENT OF COMPAL ELECTRONICS, INC.

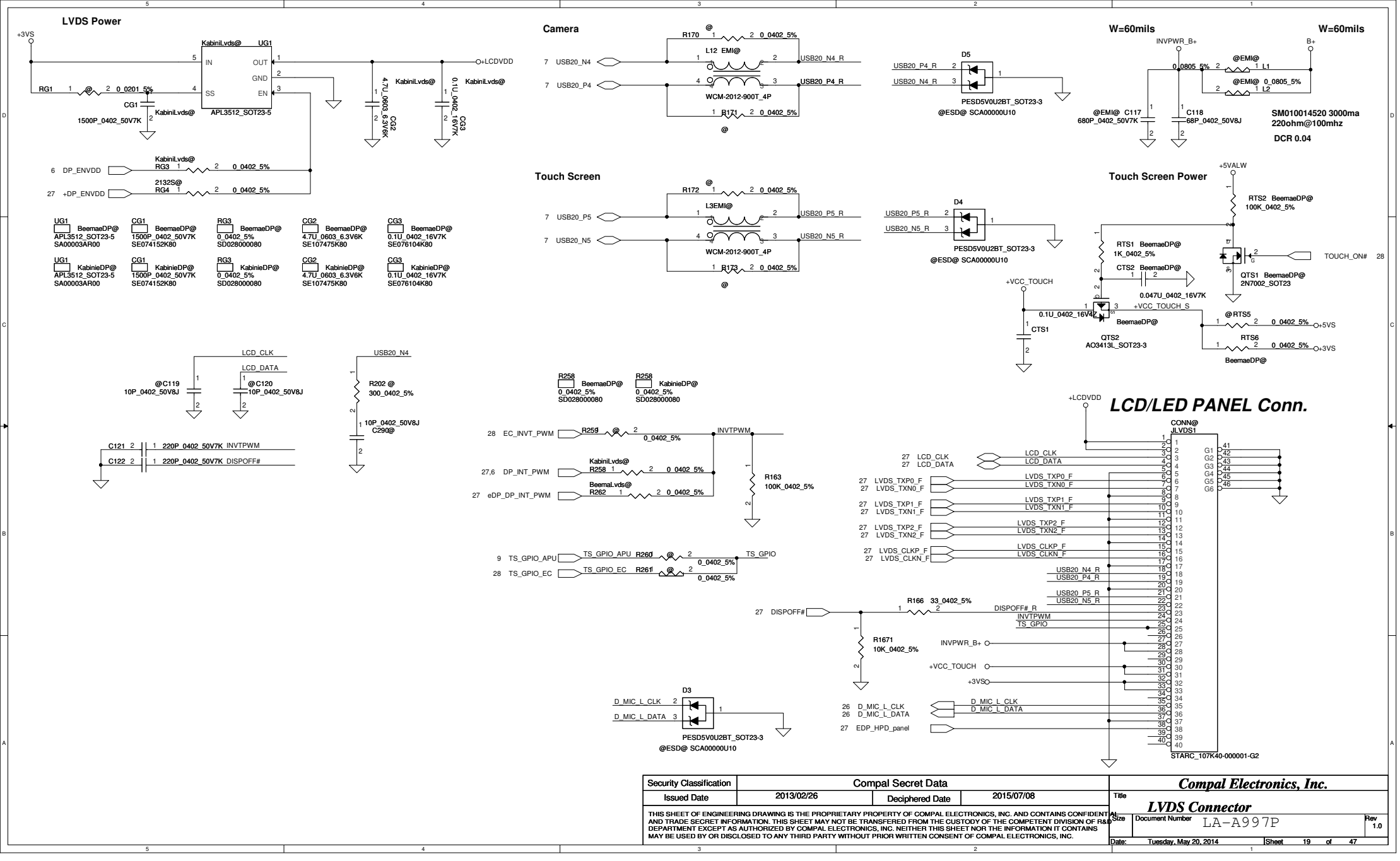

Security Classification	Compal Secret Data		
Issued Date	2013/02/26	Deciphered Date	2015/07/08

THIS SHEET OF ENGINEERING DRAWING IS THE PROPRIETARY PROPERTY OF COMPAL ELECTRONICS, INC. AND CONTAINS CONFIDENTIAL AND TRADE SECRET INFORMATION. THIS SHEET MAY NOT BE TRANSFERED FROM THE CUSTODY OF THE COMPETENT DIVISION OF R&D DEPARTMENT EXCEPT AS AUTHORIZED BY COMPAL ELECTRONICS, INC. NEITHER THIS SHEET NOR THE INFORMATION IT CONTAINS MAY BE USED BY OR DISCLOSED TO ANY THIRD PARTY WITHOUT PRIOR WRITTEN CONSENT OF COMPAL ELECTRONICS, INC.

Compal Electronics, Inc.

Title: **LVDS Connector**

Size | Document Number: LA-A997P | Rev: 1.0

Date: Tuesday, May 20, 2014 | Sheet 19 of 47

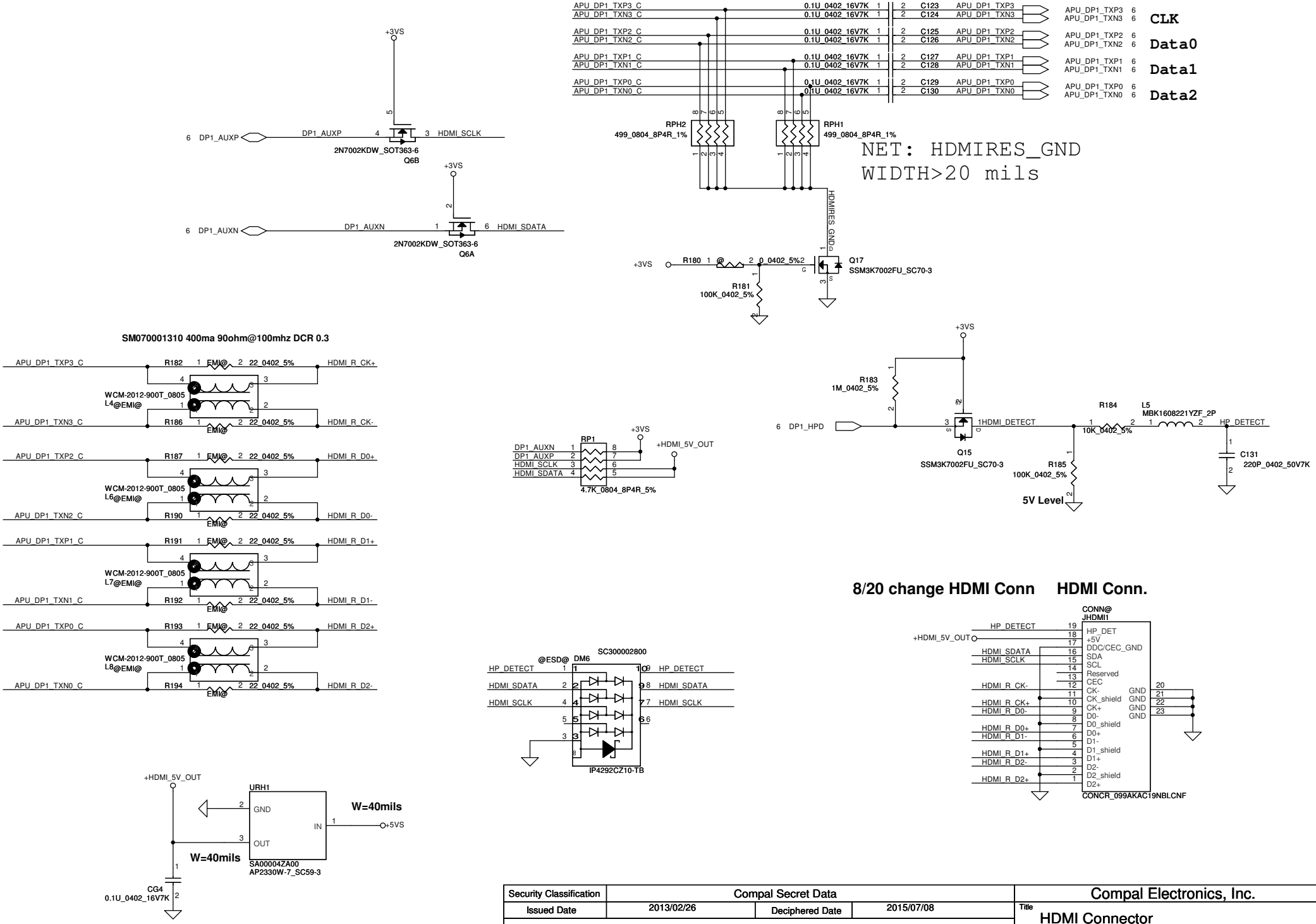

Security Classification	Compal Secret Data		
Issued Date	2013/02/26	Deciphered Date	2015/07/08

THIS SHEET OF ENGINEERING DRAWING IS THE PROPRIETARY PROPERTY OF COMPAL ELECTRONICS, INC. AND CONTAINS CONFIDENTIAL AND TRADE SECRET INFORMATION. THIS SHEET MAY NOT BE TRANSFERED FROM THE CUSTODY OF THE COMPETENT DIVISION OF R&D DEPARTMENT EXCEPT AS AUTHORIZED BY COMPAL ELECTRONICS, INC. NEITHER THIS SHEET NOR THE INFORMATION IT CONTAINS MAY BE USED BY OR DISCLOSED TO ANY THIRD PARTY WITHOUT PRIOR WRITTEN CONSENT OF COMPAL ELECTRONICS, INC.

Compal Electronics, Inc.

Title: HDMI Connector

Size: Custom | Document Number: LA-A997P | Rev: 1.0

Date: Tuesday, May 20, 2014 | Sheet 20 of 47

CRT share HDMI Power

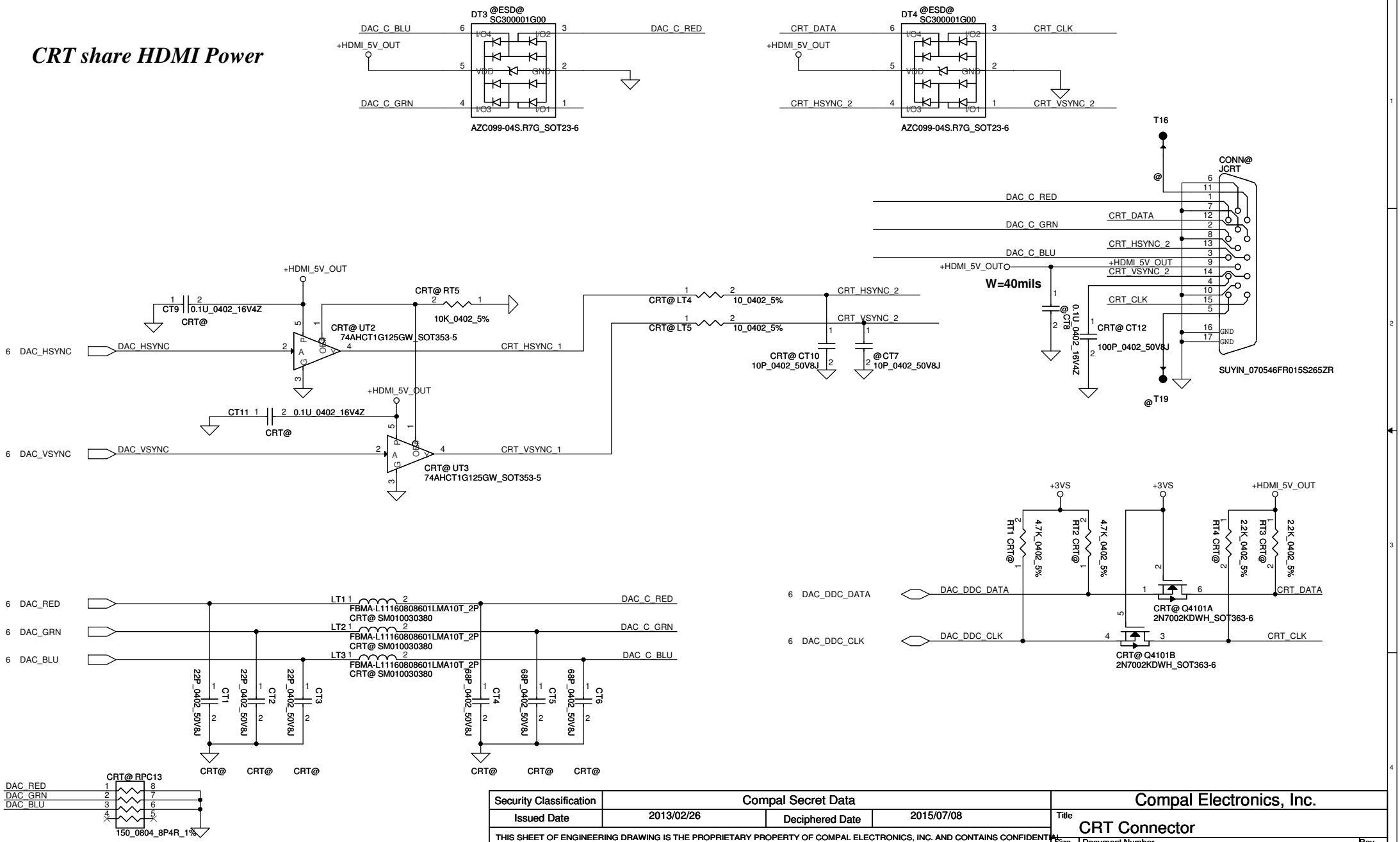

Security Classification	Compal Secret Data		
Issued Date	2013/02/26	Deciphered Date	2015/07/08

THIS SHEET OF ENGINEERING DRAWING IS THE PROPRIETARY PROPERTY OF COMPAL ELECTRONICS, INC. AND CONTAINS CONFIDENTIAL AND TRADE SECRET INFORMATION. THIS SHEET MAY NOT BE TRANSFERED FROM THE CUSTODY OF THE COMPETENT DIVISION OF R&D DEPARTMENT EXCEPT AS AUTHORIZED BY COMPAL ELECTRONICS, INC. NEITHER THIS SHEET NOR THE INFORMATION IT CONTAINS MAY BE USED BY OR DISCLOSED TO ANY THIRD PARTY WITHOUT PRIOR WRITTEN CONSENT OF COMPAL ELECTRONICS, INC.

Compal Electronics, Inc.

Title: CRT Connector

Size: B | Document Number: LA-A997P | Rev: 1.0

Date: Tuesday, May 20, 2014 | Sheet 21 of 47

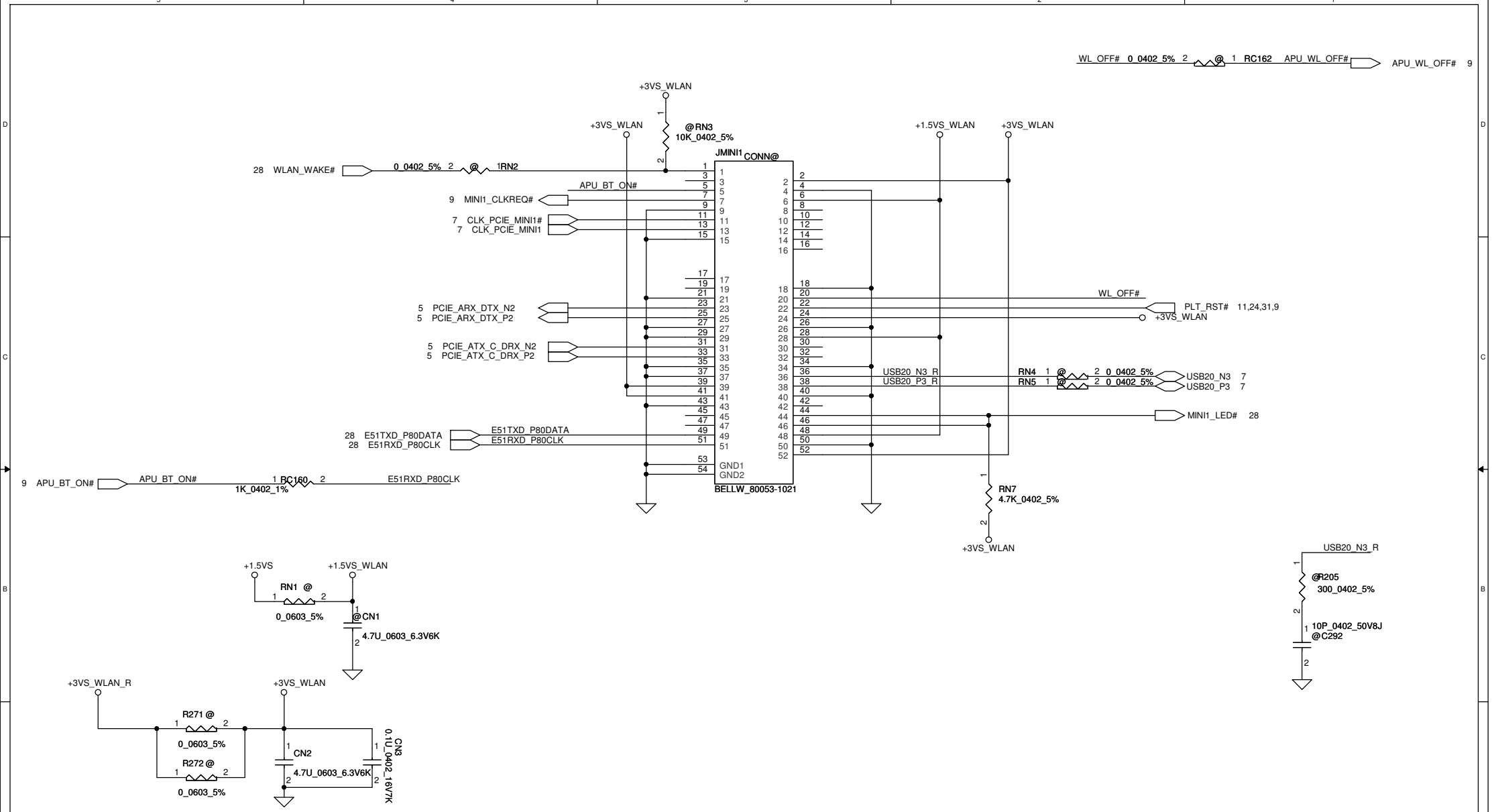

Security Classification	Compal Secret Data			Compal Electronics, Inc.
Issued Date	2013/02/26	Deciphered Date	2015/07/08	Title: WLAN
THIS SHEET OF ENGINEERING DRAWING IS THE PROPRIETARY PROPERTY OF COMPAL ELECTRONICS, INC. AND CONTAINS CONFIDENTIAL AND TRADE SECRET INFORMATION. THIS SHEET MAY NOT BE TRANSFERED FROM THE CUSTODY OF THE COMPETENT DIVISION OF R&D DEPARTMENT EXCEPT AS AUTHORIZED BY COMPAL ELECTRONICS, INC. NEITHER THIS SHEET NOR THE INFORMATION IT CONTAINS MAY BE USED BY OR DISCLOSED TO ANY THIRD PARTY WITHOUT PRIOR WRITTEN CONSENT OF COMPAL ELECTRONICS, INC.				Size / Document Number: LA-A997P / Rev: 1.0
				Date: Tuesday, May 20, 2014 / Sheet 22 of 47

2.5" SATA HDD connector

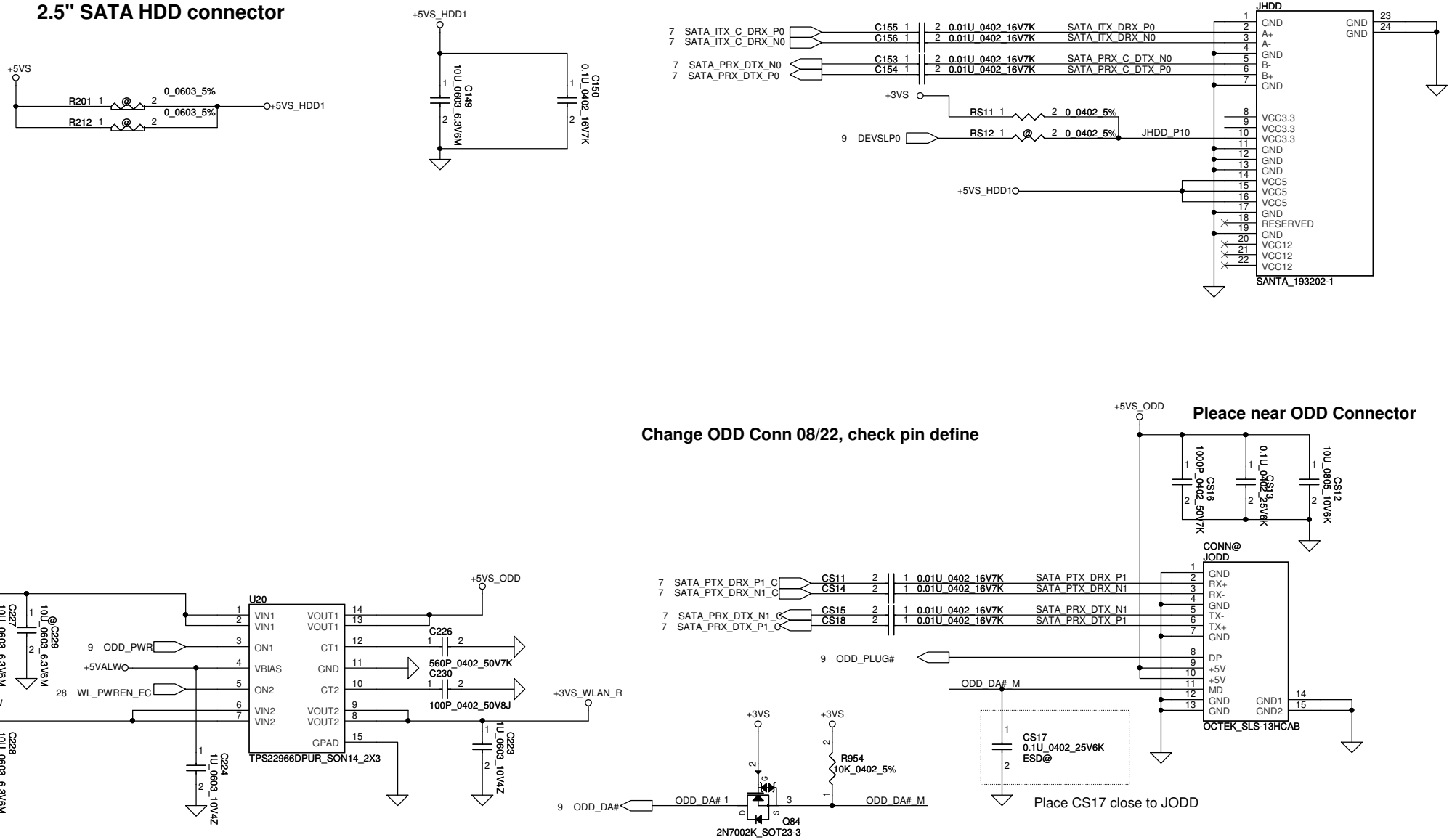

Security Classification	Compal Secret Data		
Issued Date	2013/02/26	Deciphered Date	2015/07/08

THIS SHEET OF ENGINEERING DRAWING IS THE PROPRIETARY PROPERTY OF COMPAL ELECTRONICS, INC. AND CONTAINS CONFIDENTIAL AND TRADE SECRET INFORMATION. THIS SHEET MAY NOT BE TRANSFERED FROM THE CUSTODY OF THE COMPETENT DIVISION OF R&D DEPARTMENT EXCEPT AS AUTHORIZED BY COMPAL ELECTRONICS, INC. NEITHER THIS SHEET NOR THE INFORMATION IT CONTAINS MAY BE USED BY OR DISCLOSED TO ANY THIRD PARTY WITHOUT PRIOR WRITTEN CONSENT OF COMPAL ELECTRONICS, INC.

Compal Electronics, Inc.

Title: ODD/SATA Conn

Size: B | Document Number: LA-A997P | Rev: 1.0

Date: Tuesday, May 20, 2014 | Sheet 23 of 47

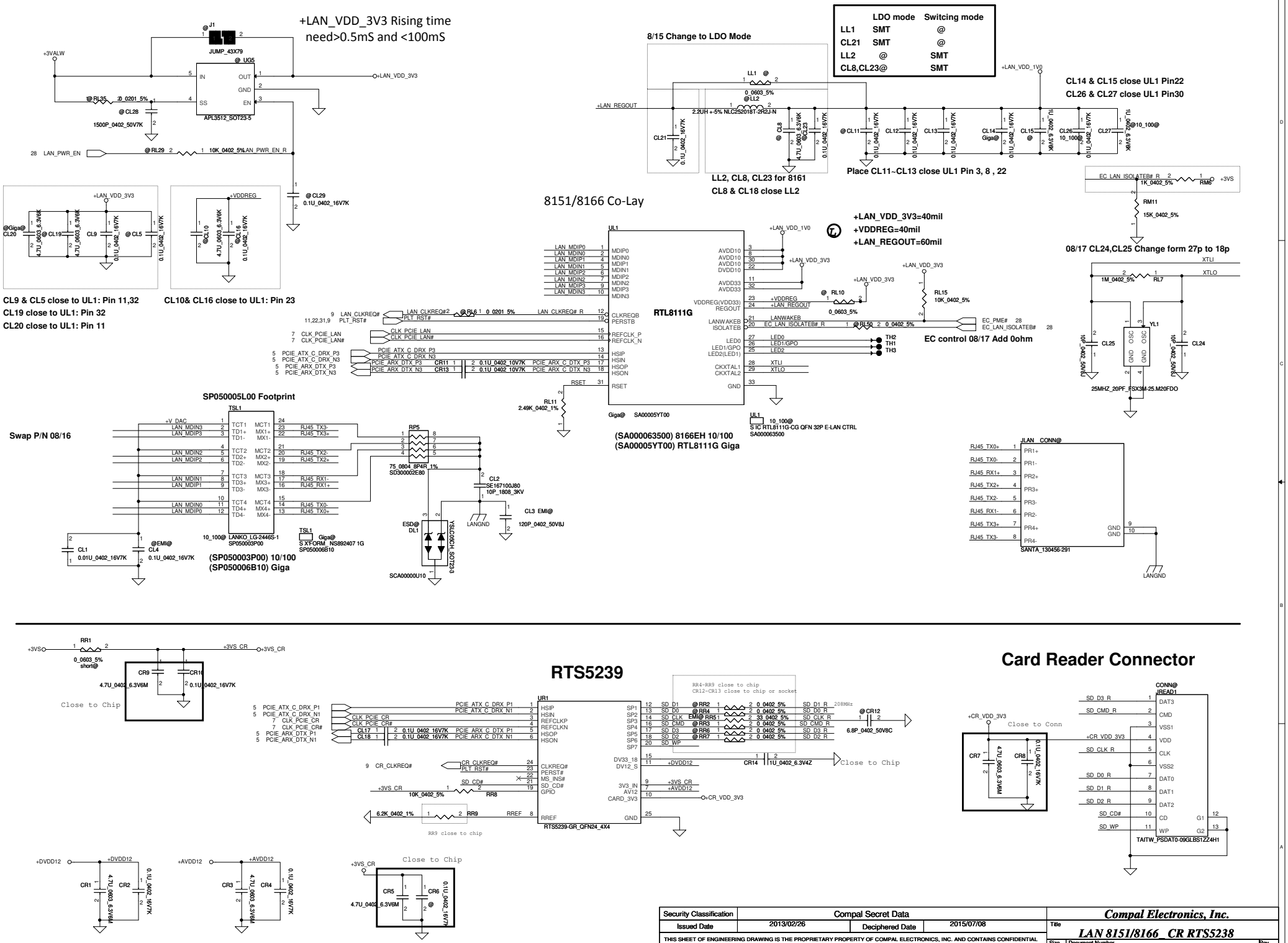

Security Classification	Compal Secret Data		
Issued Date	2013/02/26	Deciphered Date	2015/07/08

THIS SHEET OF ENGINEERING DRAWING IS THE PROPRIETARY PROPERTY OF COMPAL ELECTRONICS, INC. AND CONTAINS CONFIDENTIAL AND TRADE SECRET INFORMATION. THIS SHEET MAY NOT BE TRANSFERED FROM THE CUSTODY OF THE COMPETENT DIVISION OF R&D DEPARTMENT EXCEPT AS AUTHORIZED BY COMPAL ELECTRONICS, INC. NEITHER THIS SHEET NOR THE INFORMATION IT CONTAINS MAY BE USED BY OR DISCLOSED TO ANY THIRD PARTY WITHOUT PRIOR WRITTEN CONSENT OF COMPAL ELECTRONICS, INC.

Compal Electronics, Inc.

Title: LAN 8151/8166_ CR RTS5238

Size: | Document Number: LA-A997P | Rev: 1.0

Date: Tuesday, May 20, 2014 | Sheet 24 of 47

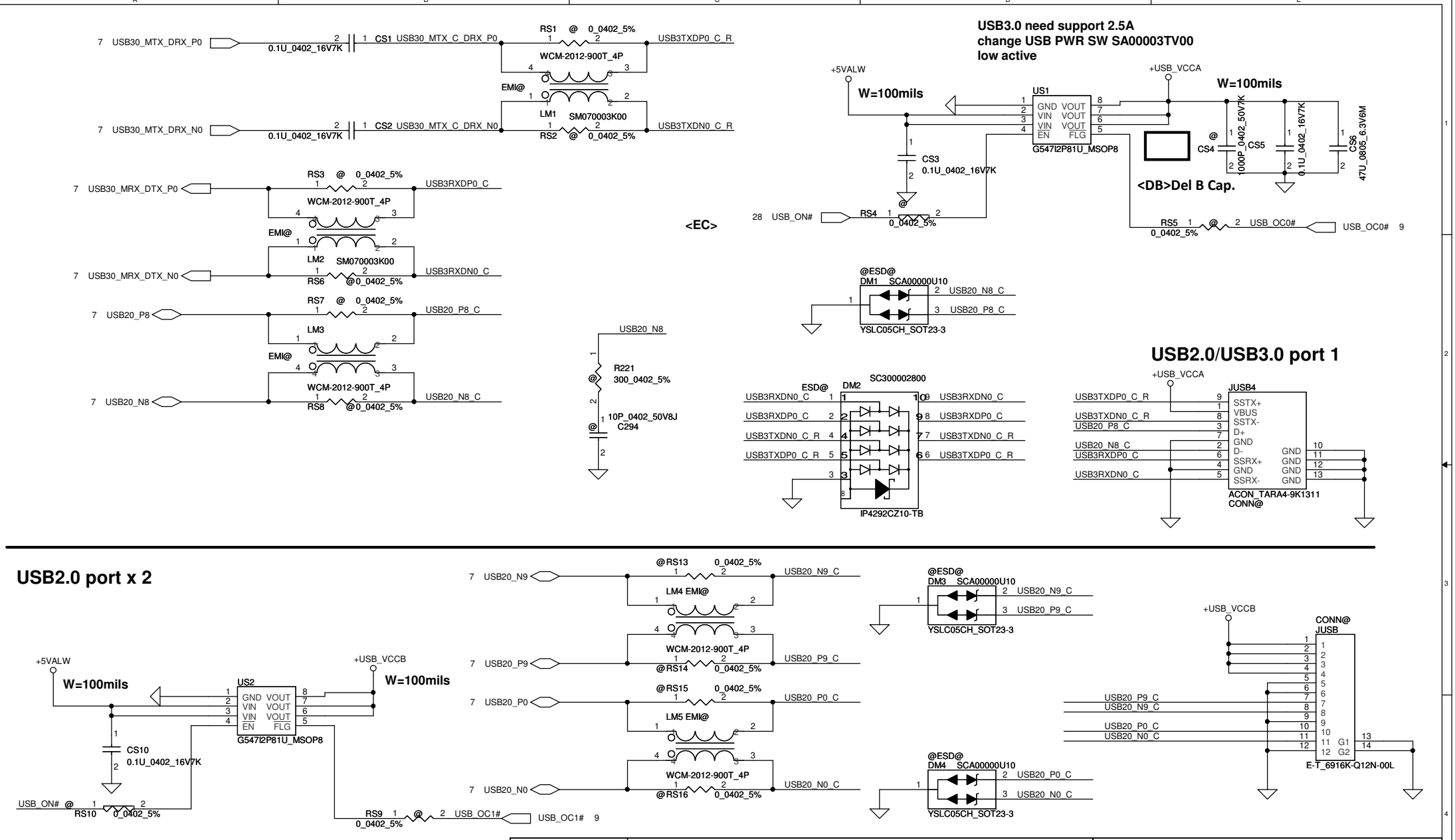

Security Classification	Compal Secret Data		
Issued Date	2013/02/26	Deciphered Date	2015/07/08

THIS SHEET OF ENGINEERING DRAWING IS THE PROPRIETARY PROPERTY OF COMPAL ELECTRONICS, INC. AND CONTAINS CONFIDENTIAL AND TRADE SECRET INFORMATION. THIS SHEET MAY NOT BE TRANSFERED FROM THE CUSTODY OF THE COMPETENT DIVISION OF R&D DEPARTMENT EXCEPT AS AUTHORIZED BY COMPAL ELECTRONICS, INC. NEITHER THIS SHEET NOR THE INFORMATION IT CONTAINS MAY BE USED BY OR DISCLOSED TO ANY THIRD PARTY WITHOUT PRIOR WRITTEN CONSENT OF COMPAL ELECTRONICS, INC.

Compal Electronics, Inc.

Title: USB 3.0/2.0 conn

Size: B | Document Number: LA-A997P | Rev: 1.0

Date: Tuesday, May 20, 2014 | Sheet 25 of 47

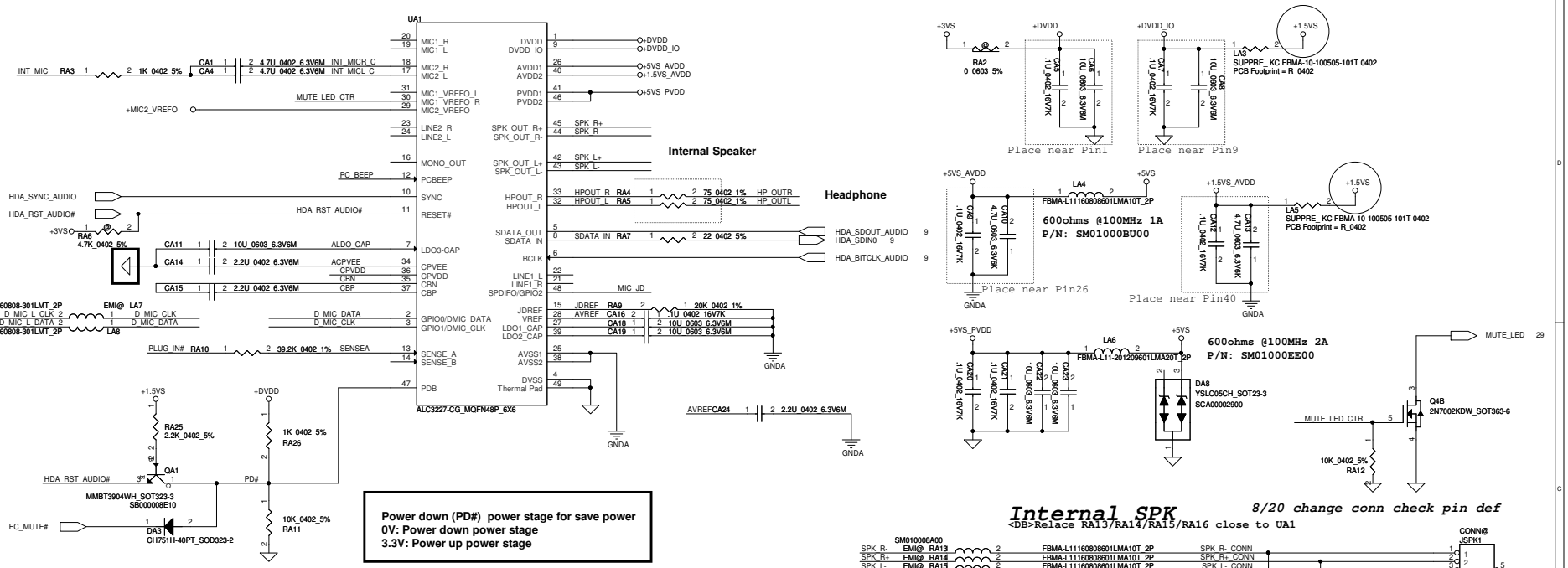

Power down (PD#) power stage for save power
0V: Power down power stage
3.3V: Up power stage power stage

Internal SPK

8/20 change conn check pin def

<DB>Relace RA13/RA14/RA15/RA16 close to UA1

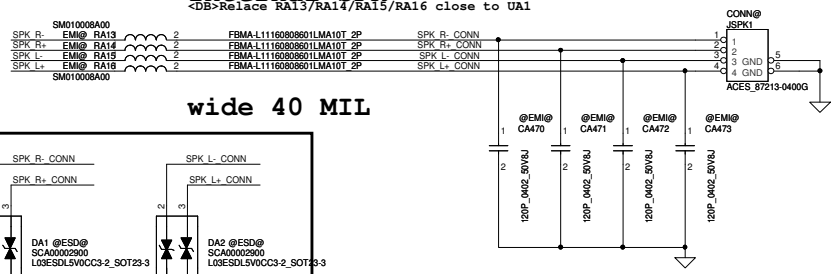

wide 40 MIL

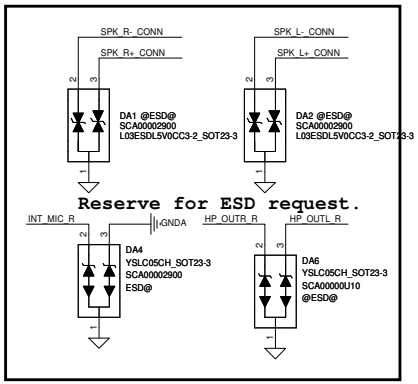

PC Beep

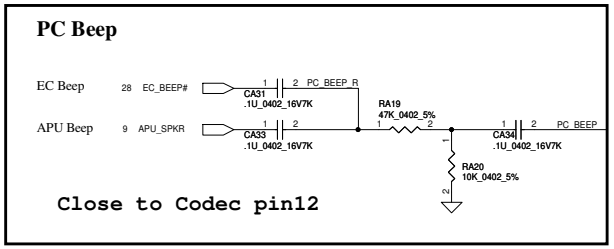

Close to Codec pin12

Jack detect
Combo Mic = High
Normal HP = Low

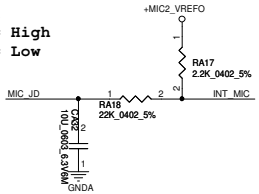

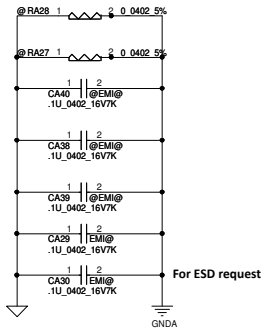

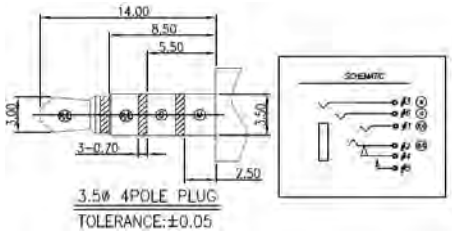

COMBO AUDIO JACK

HPR, HPL, 15mil Keep 30mil

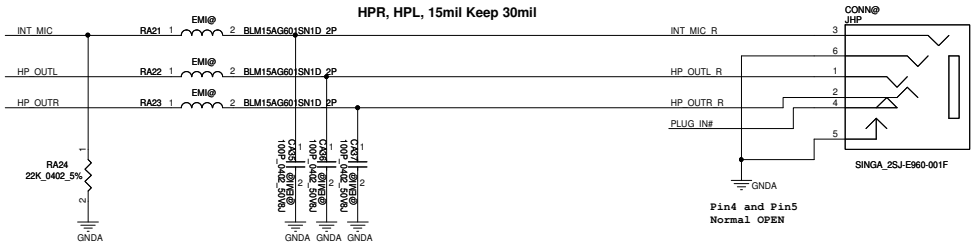

Security Classification	Compal Secret Data			Compal Electronics, Inc.
Issued Date	2013/01/04	Deciphered Date	2015/01/04	Title: AUDIO ALC259-VC2-CG
				Size: C; Document Number: LA-A997P; Rev: 1.0
				Date: Tuesday, May 20, 2014; Sheet 26 of 47

THIS SHEET OF ENGINEERING DRAWING IS THE PROPRIETARY PROPERTY OF COMPAL ELECTRONICS, INC. AND CONTAINS CONFIDENTIAL AND TRADE SECRET INFORMATION. THIS SHEET MAY NOT BE TRANSFERED FROM THE CUSTODY OF THE COMPETENT DIVISION OF R&D DEPARTMENT EXCEPT AS AUTHORIZED BY COMPAL ELECTRONICS, INC. NEITHER THIS SHEET NOR THE INFORMATION IT CONTAINS MAY BE USED BY OR DISCLOSED TO ANY THIRD PARTY WITHOUT PRIOR WRITTEN CONSENT OF COMPAL ELECTRONICS, INC.

JPHW7 need to short

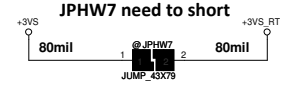

Layout note
Close to Pin3

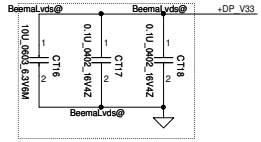

Layout note
Close to LT5 Close to Pin18 Close to Pin13

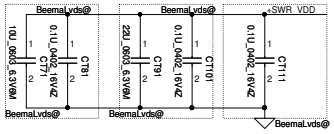

Layout note
Close to Pin11 Close to Pin27 Close to Pin7

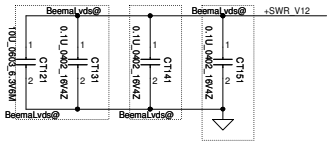

※ROM only mode : PIN 30 4.7k pull low, Pin 31 4.7k pull high.
EP mode : PIN 30 4.7k pull high, Pin 31 4.7k pull low.
EEPROM : PIN 30 4.7k pull high, Pin 31 4.7k pull high.
〈 ※Default mode 〉

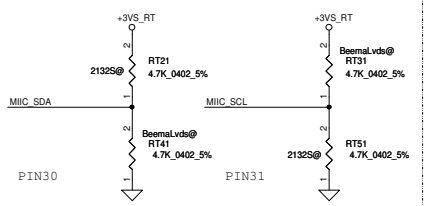

SWR / LDO Mode select

	LDO	SWR
2132S	Do not support	mount LT7
2132R	Use 0 ohm	mount LT7
※ If use 2132R, please select LDO mode as default.		

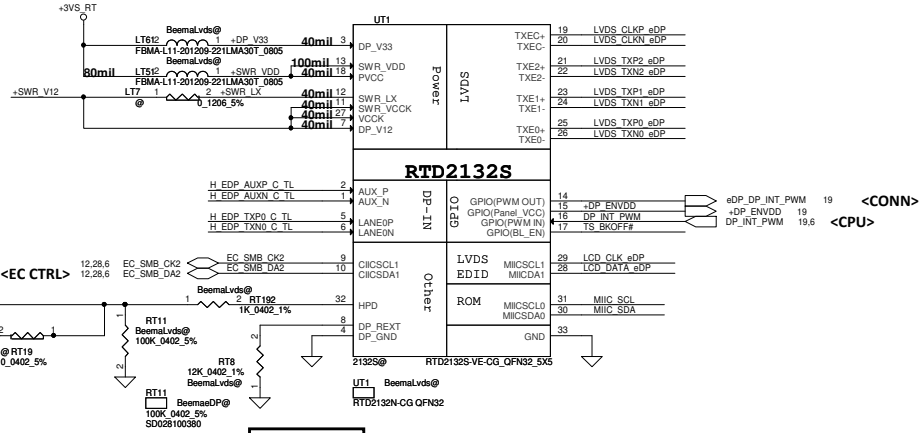

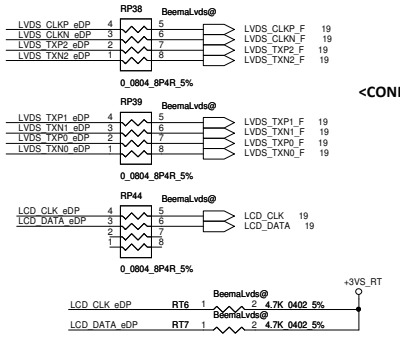

	PIN15
2132S	TL_ENVDD
2132R	+LCD_VDD *
* Version R internal Power Switch, can output 1A, Rds(on)=0.2 ohm	

PIN16	Accept voltage input (high level)
2132S	3.3V
2132R	1.5~3.3V
* Version R has internal level shifter, remove level shifter circuit on AMD platform	

Layout note
Close to Pin8

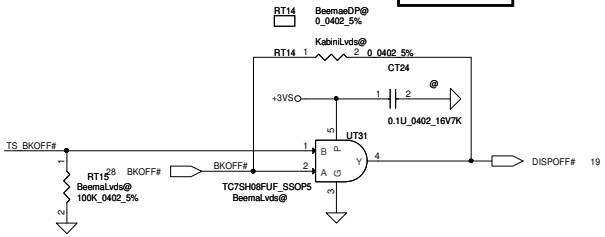

Different between 2132S and 2132R	
2132S	2132R
1. Support SWR mode	1. Support LDO mode and SWR mode 2. Internal ROM 3. Support LCD_VDD(internal Power switch) 4. Integrates Level shifter

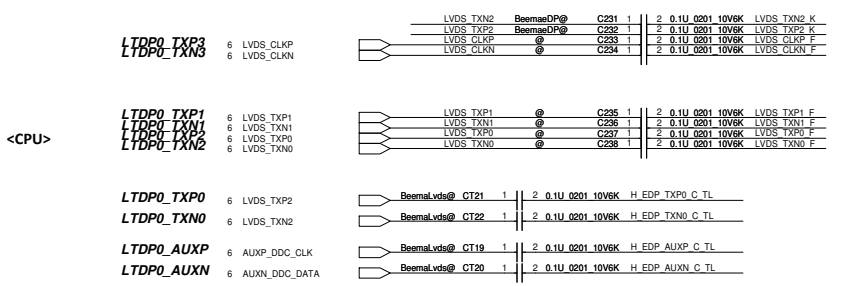

< Kabini LVDS>

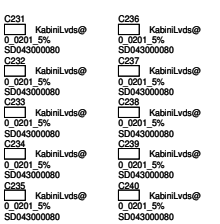

< Kabini eDP>

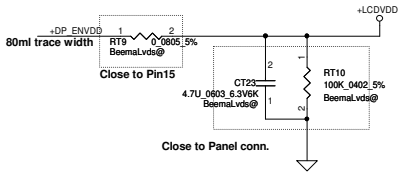

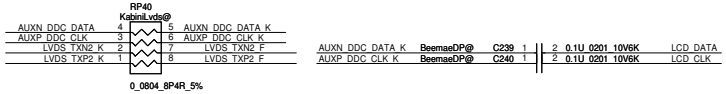

Security Classification	Compal Secret Data		
Issued Date	2013/02/26	Deciphered Date	2015/07/08

THIS SHEET OF ENGINEERING DRAWING IS THE PROPRIETARY PROPERTY OF COMPAL ELECTRONICS, INC. AND CONTAINS CONFIDENTIAL AND TRADE SECRET INFORMATION. THIS SHEET MAY NOT BE TRANSFERED FROM THE CUSTODY OF THE COMPETENT DIVISION OF R&D DEPARTMENT EXCEPT AS AUTHORIZED BY COMPAL ELECTRONICS, INC. NEITHER THIS SHEET NOR THE INFORMATION IT CONTAINS MAY BE USED BY OR DISCLOSED TO ANY THIRD PARTY WITHOUT PRIOR WRITTEN CONSENT OF COMPAL ELECTRONICS, INC.

Compal Electronics, Inc.

Title: eDP to LVDS

Size | Document Number: LA-A997P | Rev: 1.0

Date: Tuesday, May 20, 2014 | Sheet 27 of 47

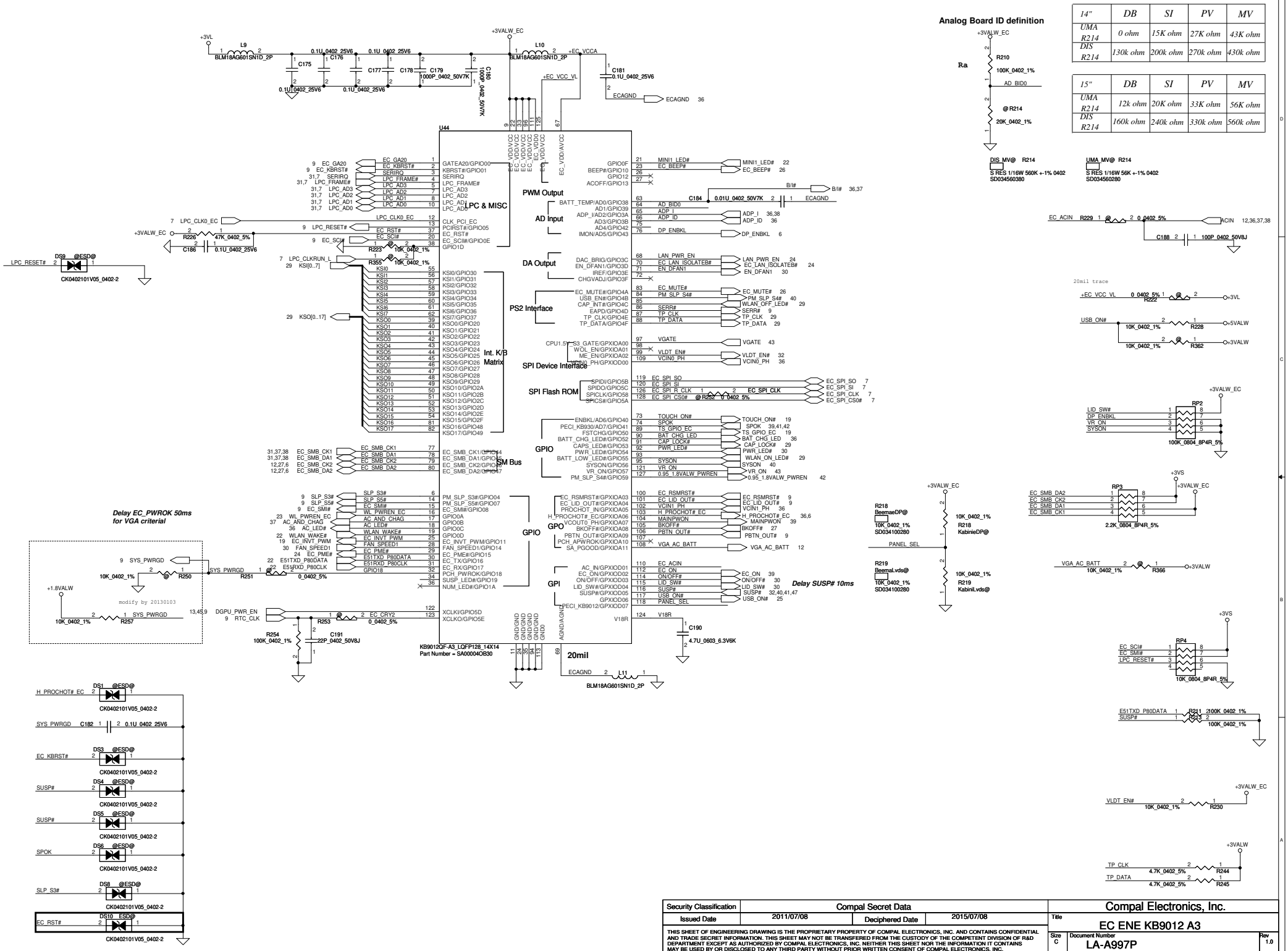

14"	DB	SI	PV	MV
UMA R214	0 ohm	15K ohm	27K ohm	43K ohm
DIS R214	130k ohm	200k ohm	270k ohm	430k ohm

15"	DB	SI	PV	MV
UMA R214	12k ohm	20K ohm	33K ohm	56K ohm
DIS R214	160k ohm	240k ohm	330k ohm	560k ohm

Security Classification	Compal Secret Data		
Issued Date	2011/07/08	Deciphered Date	2015/07/08

THIS SHEET OF ENGINEERING DRAWING IS THE PROPRIETARY PROPERTY OF COMPAL ELECTRONICS, INC. AND CONTAINS CONFIDENTIAL AND TRADE SECRET INFORMATION. THIS SHEET MAY NOT BE TRANSFERED FROM THE CUSTODY OF THE COMPETENT DIVISION OF R&D DEPARTMENT EXCEPT AS AUTHORIZED BY COMPAL ELECTRONICS, INC. NEITHER THIS SHEET NOR THE INFORMATION IT CONTAINS MAY BE USED BY OR DISCLOSED TO ANY THIRD PARTY WITHOUT PRIOR WRITTEN CONSENT OF COMPAL ELECTRONICS, INC.

Compal Electronics, Inc.

Title: EC ENE KB9012 A3

Size: C | Document Number: LA-A997P | Rev: 1.0

Date: Tuesday, May 20, 2014 | Sheet 28 of 47

Touch pad conn

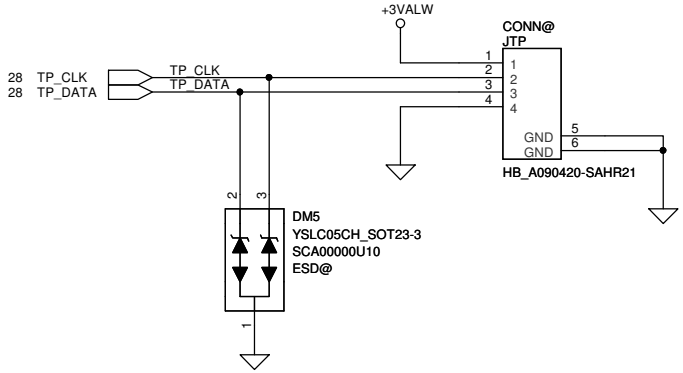

Keyboard conn

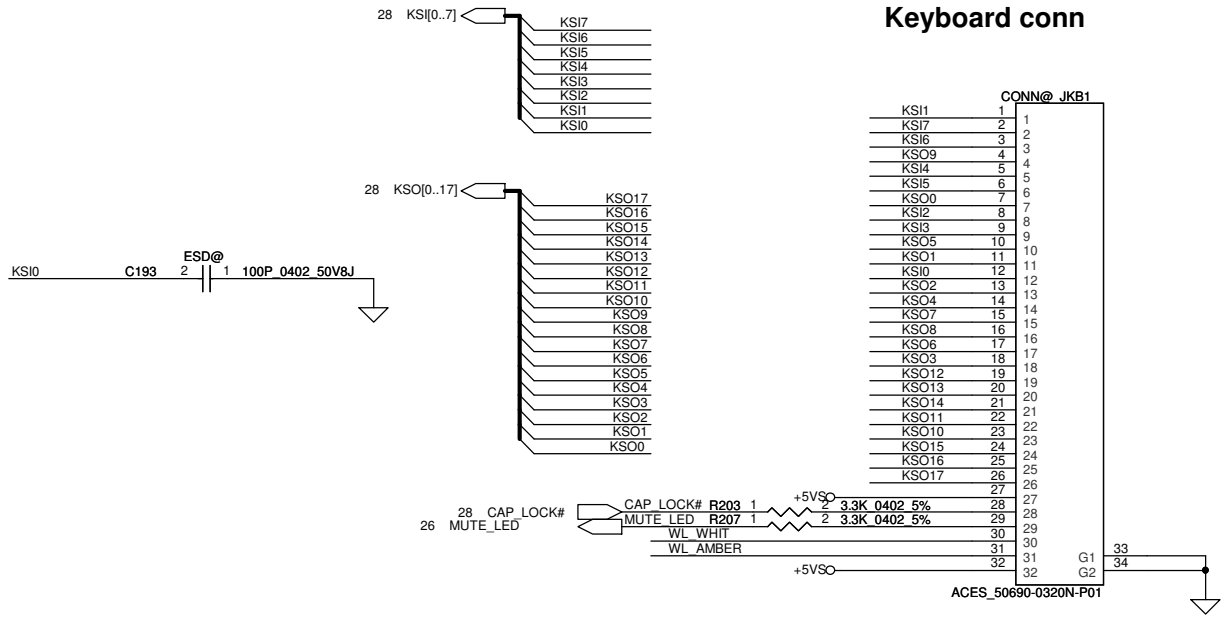

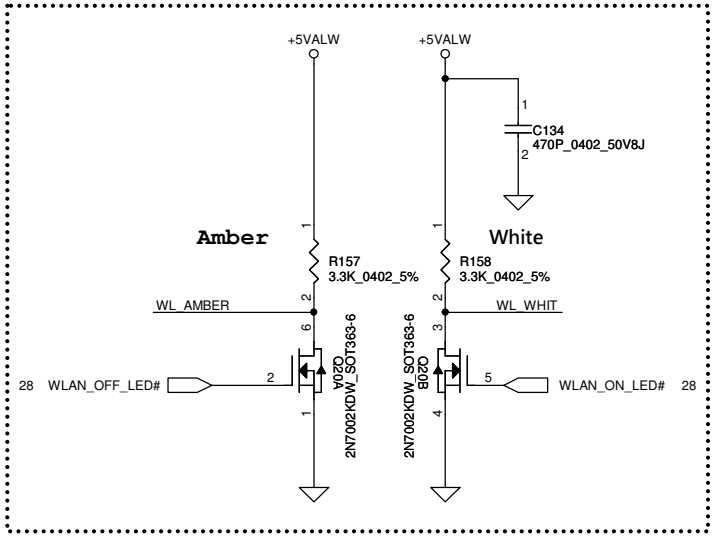

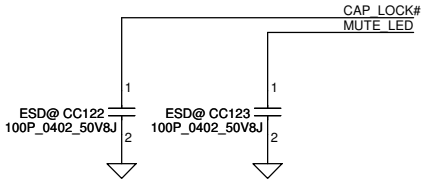

Security Classification	Compal Secret Data			Compal Electronics, Inc.
Issued Date	2013/02/26	Deciphered Date	2015/07/08	Title: KB/TP
				Size: B; Document Number: LA-A997P; Rev: 1.0
				Date: Tuesday, May 20, 2014; Sheet 29 of 47

THIS SHEET OF ENGINEERING DRAWING IS THE PROPRIETARY PROPERTY OF COMPAL ELECTRONICS, INC. AND CONTAINS CONFIDENTIAL AND TRADE SECRET INFORMATION. THIS SHEET MAY NOT BE TRANSFERED FROM THE CUSTODY OF THE COMPETENT DIVISION OF R&D DEPARTMENT EXCEPT AS AUTHORIZED BY COMPAL ELECTRONICS, INC. NEITHER THIS SHEET NOR THE INFORMATION IT CONTAINS MAY BE USED BY OR DISCLOSED TO ANY THIRD PARTY WITHOUT PRIOR WRITTEN CONSENT OF COMPAL ELECTRONICS, INC.

Powert Button Connector

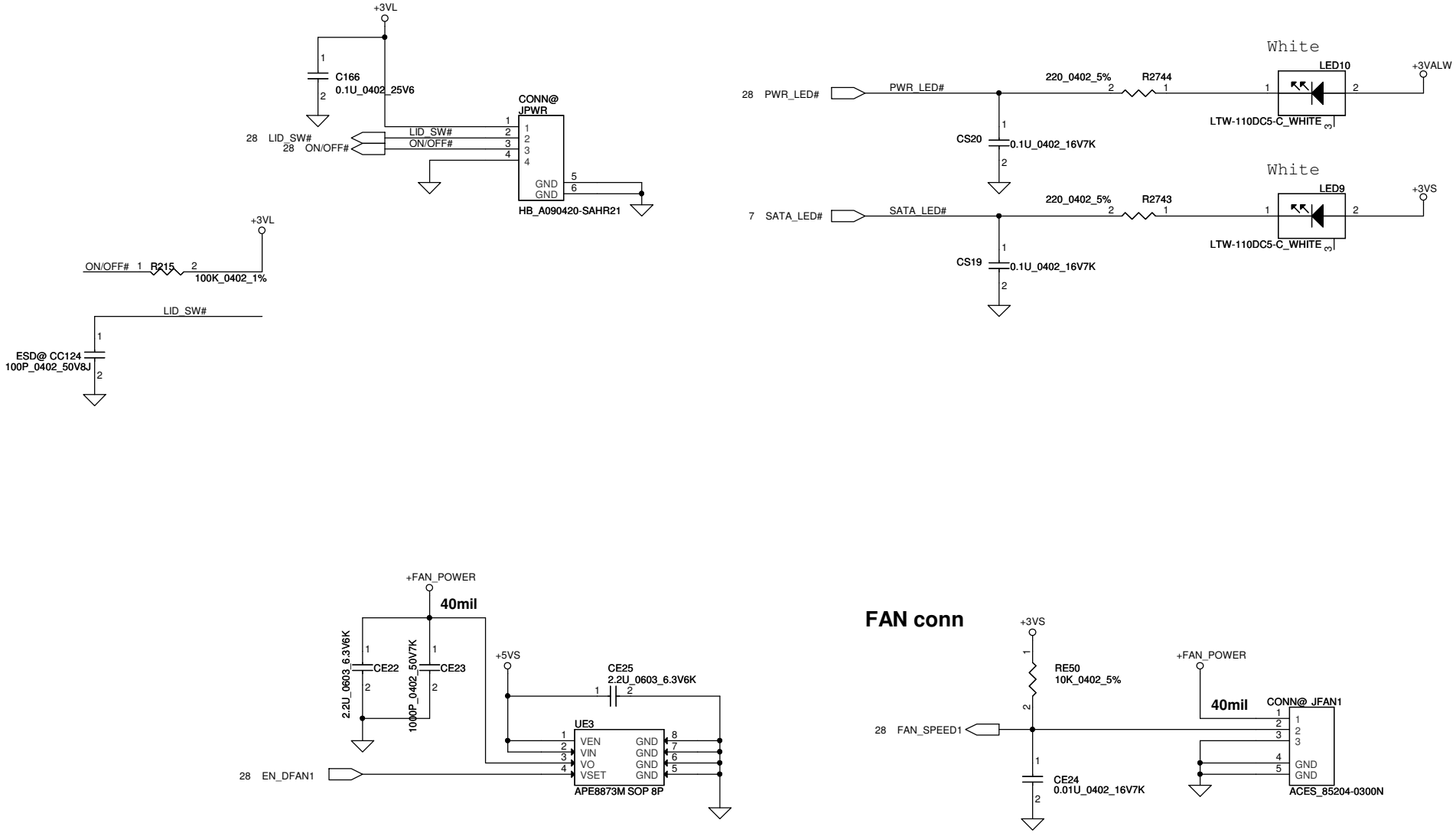

Security Classification	Compal Secret Data			Compal Electronics, Inc.
Issued Date	2013/02/26	Deciphered Date	2015/07/08	Title: PWRBTN/FAN
				Size: B; Document Number: LA-A997P; Rev: 1.0
				Date: Tuesday, May 20, 2014; Sheet 30 of 47

THIS SHEET OF ENGINEERING DRAWING IS THE PROPRIETARY PROPERTY OF COMPAL ELECTRONICS, INC. AND CONTAINS CONFIDENTIAL AND TRADE SECRET INFORMATION. THIS SHEET MAY NOT BE TRANSFERED FROM THE CUSTODY OF THE COMPETENT DIVISION OF R&D DEPARTMENT EXCEPT AS AUTHORIZED BY COMPAL ELECTRONICS, INC. NEITHER THIS SHEET NOR THE INFORMATION IT CONTAINS MAY BE USED BY OR DISCLOSED TO ANY THIRD PARTY WITHOUT PRIOR WRITTEN CONSENT OF COMPAL ELECTRONICS, INC.

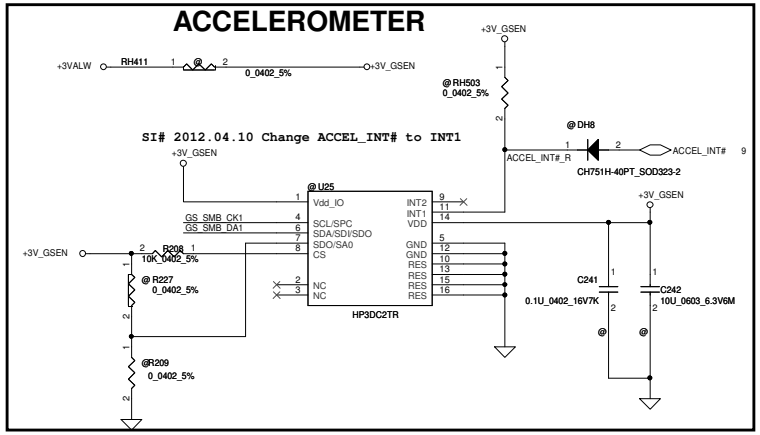

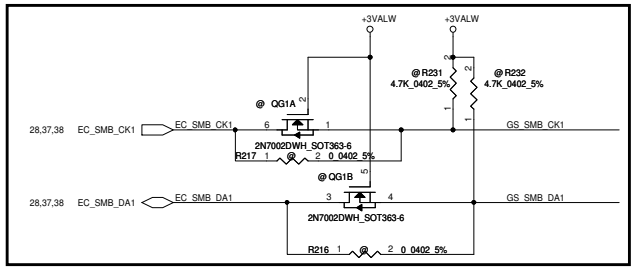

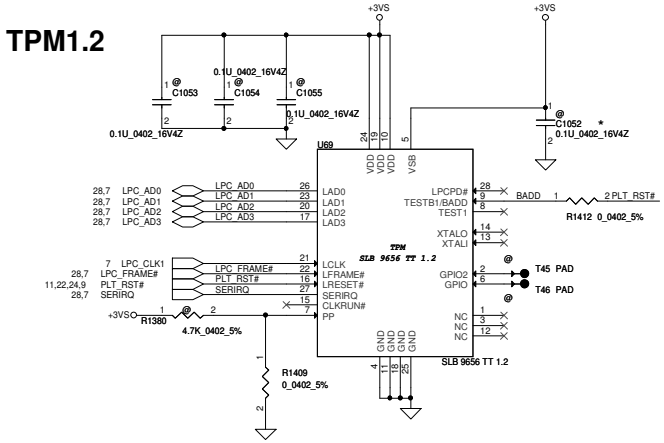

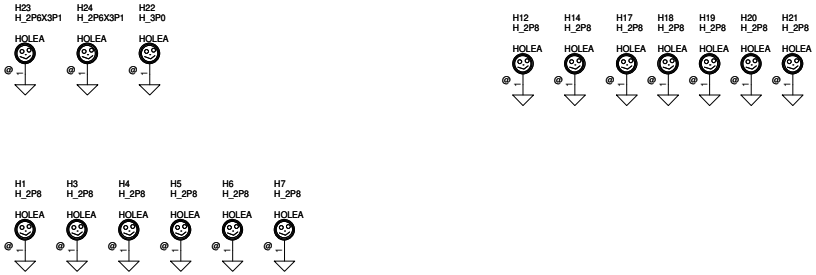

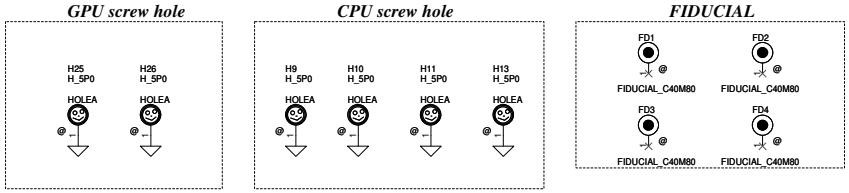

Security Classification	Compal Secret Data			Compal Electronics, Inc.
Issued Date	2013/02/26	Deciphered Date	2015/07/08	Title: LED/Screw hole
				Size: Document Number: LA-A997P — Rev: 1.0
				Date: Tuesday, May 20, 2014 — Sheet 31 of 47

THIS SHEET OF ENGINEERING DRAWING IS THE PROPRIETARY PROPERTY OF COMPAL ELECTRONICS, INC. AND CONTAINS CONFIDENTIAL AND TRADE SECRET INFORMATION. THIS SHEET MAY NOT BE TRANSFERED FROM THE CUSTODY OF THE COMPETENT DIVISION OF R&D DEPARTMENT EXCEPT AS AUTHORIZED BY COMPAL ELECTRONICS, INC. NEITHER THIS SHEET NOR THE INFORMATION IT CONTAINS MAY BE USED BY OR DISCLOSED TO ANY THIRD PARTY WITHOUT PRIOR WRITTEN CONSENT OF COMPAL ELECTRONICS, INC.

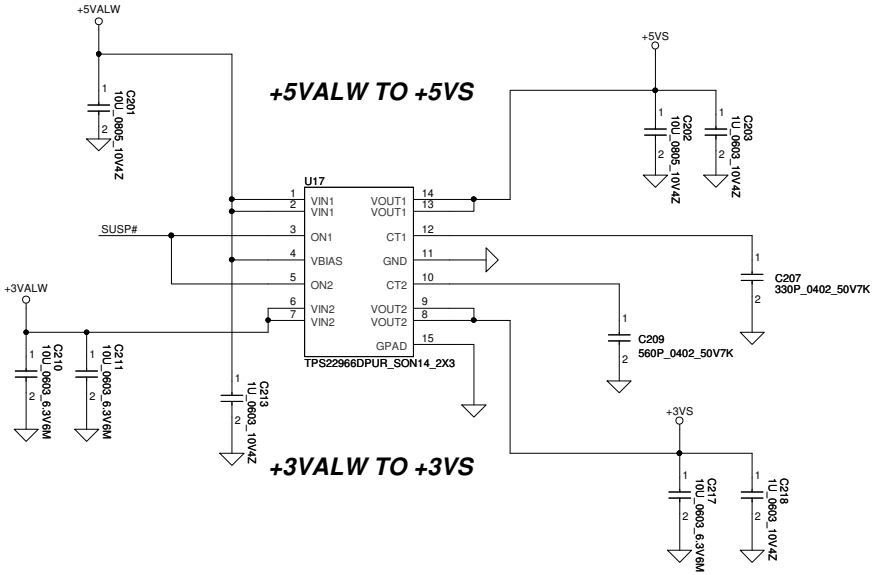

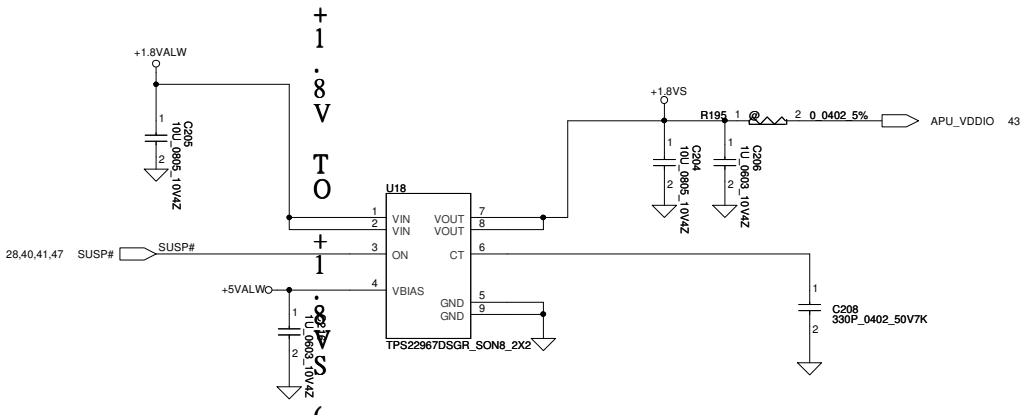

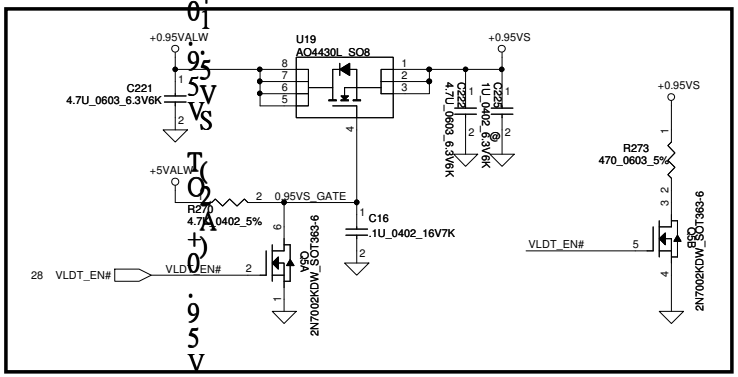

Security Classification	Compal Secret Data		Compal Electronics, Inc.
Issued Date	2013/02/26	Deciphered Date 2015/07/08	Title DC Interface
THIS SHEET OF ENGINEERING DRAWING IS THE PROPRIETARY PROPERTY OF COMPAL ELECTRONICS, INC. AND CONTAINS CONFIDENTIAL AND TRADE SECRET INFORMATION. THIS SHEET MAY NOT BE TRANSFERED FROM THE CUSTODY OF THE COMPETENT DIVISION OF R&D DEPARTMENT EXCEPT AS AUTHORIZED BY COMPAL ELECTRONICS, INC. NEITHER THIS SHEET NOR THE INFORMATION IT CONTAINS MAY BE USED BY OR DISCLOSED TO ANY THIRD PARTY WITHOUT PRIOR WRITTEN CONSENT OF COMPAL ELECTRONICS, INC.			Document Number LA-A997P / Rev 1.0
Custom			Date: Tuesday, May 20, 2014 / Sheet 32 of 47

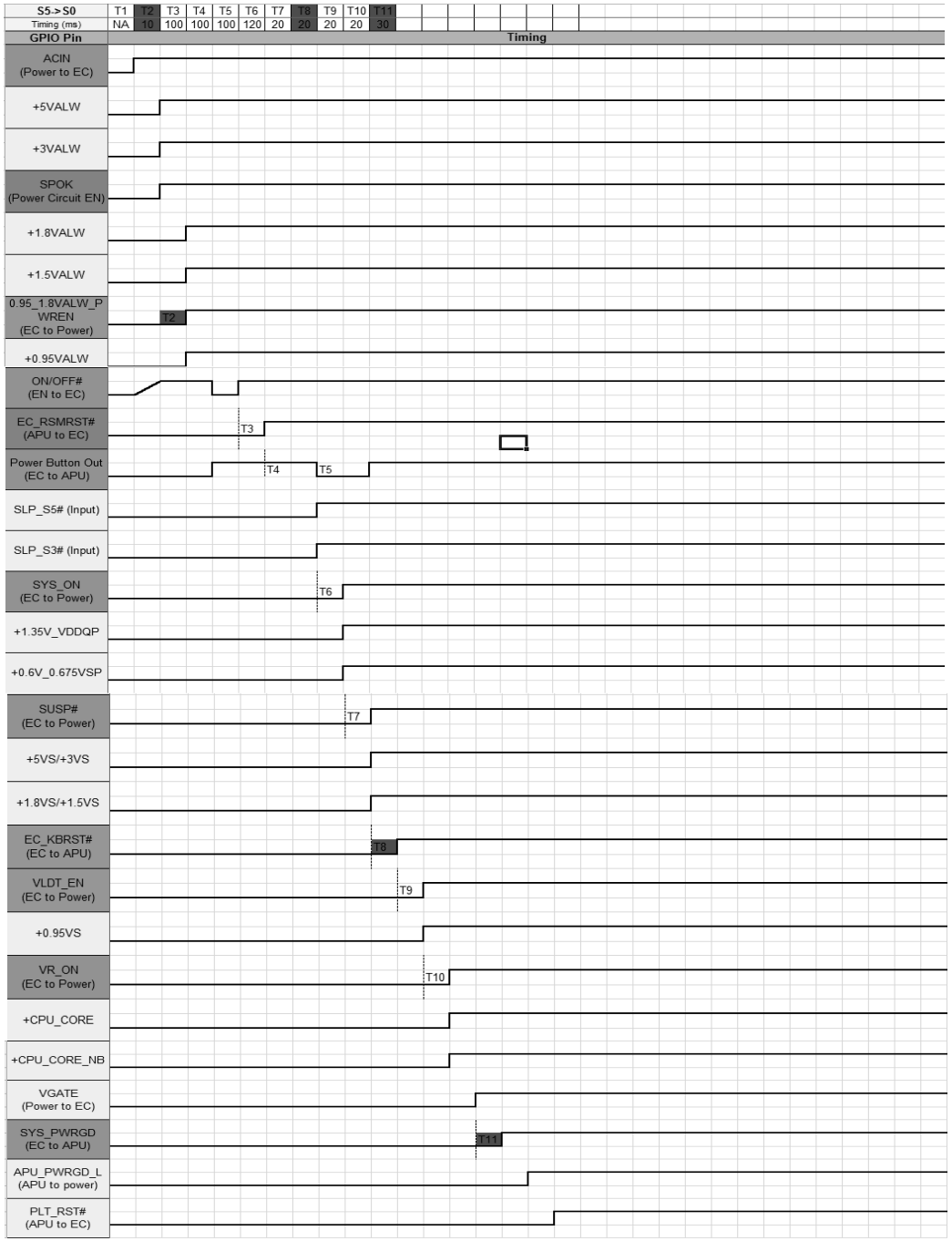

Security Classification	Compal Secret Data		Compal Electronics, Inc.
Issued Date	2013/02/26	Deciphered Date 2015/07/08	Title: Power sequence
			Size: Custom; Document Number: LA-A997P; Rev: 1.0
			Date: Tuesday, May 20, 2014; Sheet 33 of 47

THIS SHEET OF ENGINEERING DRAWING IS THE PROPRIETARY PROPERTY OF COMPAL ELECTRONICS, INC. AND CONTAINS CONFIDENTIAL AND TRADE SECRET INFORMATION. THIS SHEET MAY NOT BE TRANSFERED FROM THE CUSTODY OF THE COMPETENT DIVISION OF R&D DEPARTMENT EXCEPT AS AUTHORIZED BY COMPAL ELECTRONICS, INC. NEITHER THIS SHEET NOR THE INFORMATION IT CONTAINS MAY BE USED BY OR DISCLOSED TO ANY THIRD PARTY WITHOUT PRIOR WRITTEN CONSENT OF COMPAL ELECTRONICS, INC.

Security Classification	Compal Secret Data		
Issued Date	2013/02/26	Deciphered Date	2015/07/08

THIS SHEET OF ENGINEERING DRAWING IS THE PROPRIETARY PROPERTY OF COMPAL ELECTRONICS, INC. AND CONTAINS CONFIDENTIAL AND TRADE SECRET INFORMATION. THIS SHEET MAY NOT BE TRANSFERED FROM THE CUSTODY OF THE COMPETENT DIVISION OF R&D DEPARTMENT EXCEPT AS AUTHORIZED BY COMPAL ELECTRONICS, INC. NEITHER THIS SHEET NOR THE INFORMATION IT CONTAINS MAY BE USED BY OR DISCLOSED TO ANY THIRD PARTY WITHOUT PRIOR WRITTEN CONSENT OF COMPAL ELECTRONICS, INC.

Compal Electronics, Inc.

Title: EE Change list

Size: Custom | Document Number: LA-A997P | Rev: 1.0

Date: Tuesday, May 20, 2014 | Sheet 34 of 47

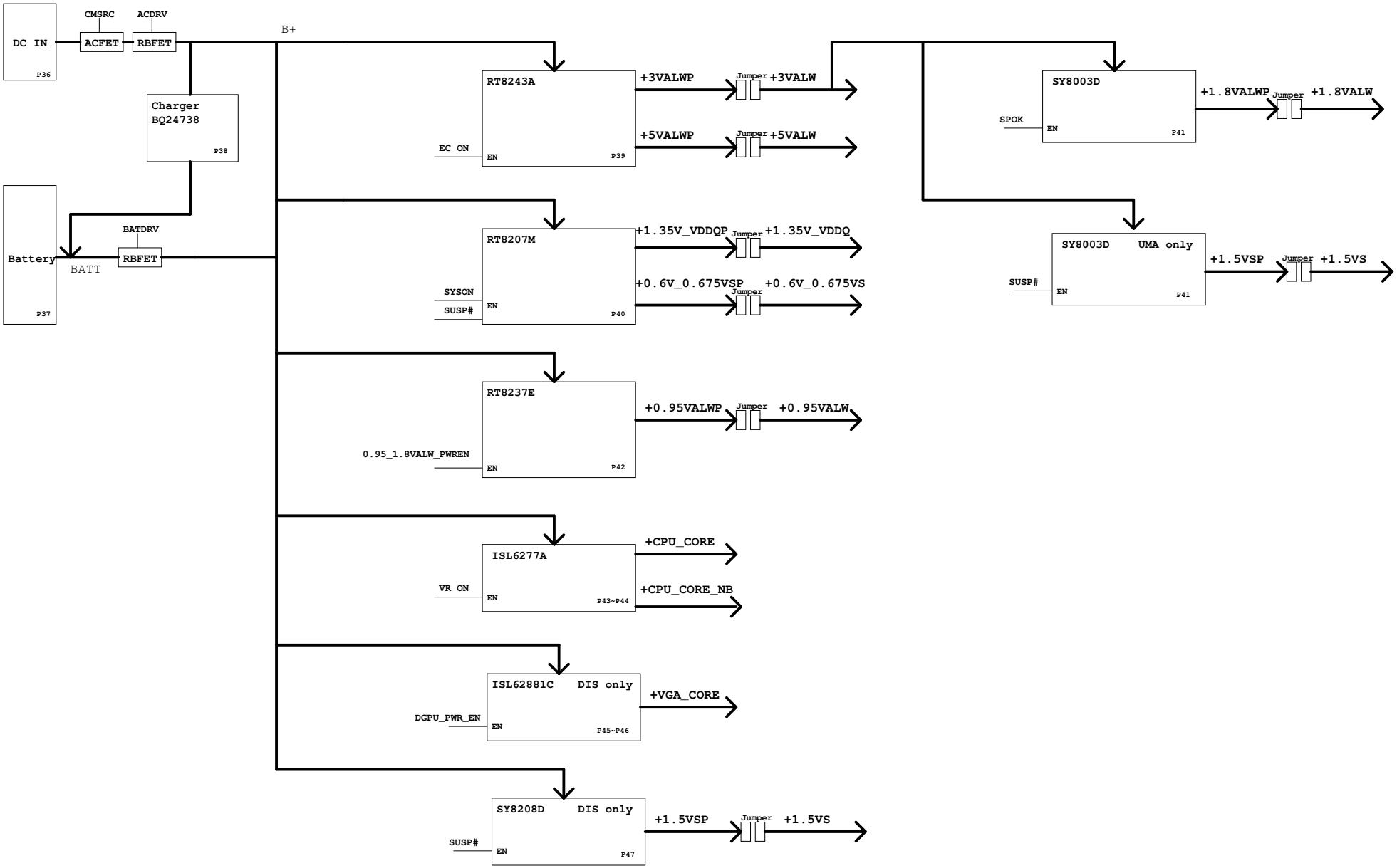

Security Classification	Compal Secret Data		
Issued Date	2012/04/03	Deciphered Date	2014/12/31

THIS SHEET OF ENGINEERING DRAWING IS THE PROPRIETARY PROPERTY OF COMPAL ELECTRONICS, INC. AND CONTAINS CONFIDENTIAL AND TRADE SECRET INFORMATION. THIS SHEET MAY NOT BE TRANSFERED FROM THE CUSTODY OF THE COMPETENT DIVISION OF R&D DEPARTMENT EXCEPT AS AUTHORIZED BY COMPAL ELECTRONICS, INC. NEITHER THIS SHEET NOR THE INFORMATION IT CONTAINS MAY BE USED BY OR DISCLOSED TO ANY THIRD PARTY WITHOUT PRIOR WRITTEN CONSENT OF COMPAL ELECTRONICS, INC.

Compal Electronics, Inc.

Title: ***Power Block Diagram***

Size | Document Number: **LA-A997P** | Rev: 1.0

Date: Tuesday, May 20, 2014 | Sheet 35 of 47

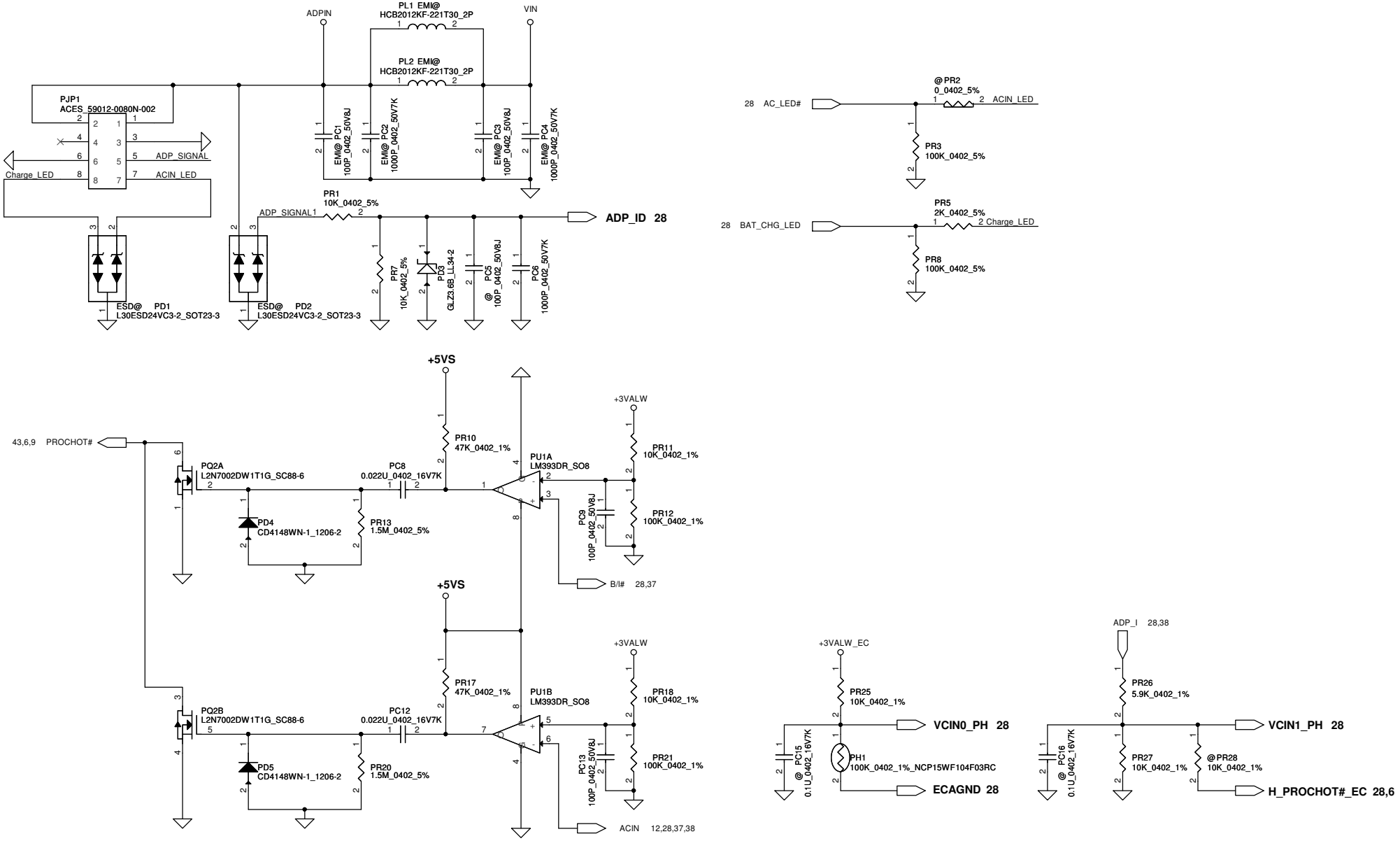

Security Classification	Compal Secret Data			Compal Electronics, Inc.
Issued Date	2013/08/07	Deciphered Date	2016/08/06	Title: *DC Conn*
				Size: Document Number: **LA-A997P** Rev: 1.0
				Date: Tuesday, May 20, 2014 Sheet 36 of 47

THIS SHEET OF ENGINEERING DRAWING IS THE PROPRIETARY PROPERTY OF COMPAL ELECTRONICS, INC. AND CONTAINS CONFIDENTIAL AND TRADE SECRET INFORMATION. THIS SHEET MAY NOT BE TRANSFERED FROM THE CUSTODY OF THE COMPETENT DIVISION OF R&D DEPARTMENT EXCEPT AS AUTHORIZED BY COMPAL ELECTRONICS, INC. NEITHER THIS SHEET NOR THE INFORMATION IT CONTAINS MAY BE USED BY OR DISCLOSED TO ANY THIRD PARTY WITHOUT PRIOR WRITTEN CONSENT OF COMPAL ELECTRONICS, INC.

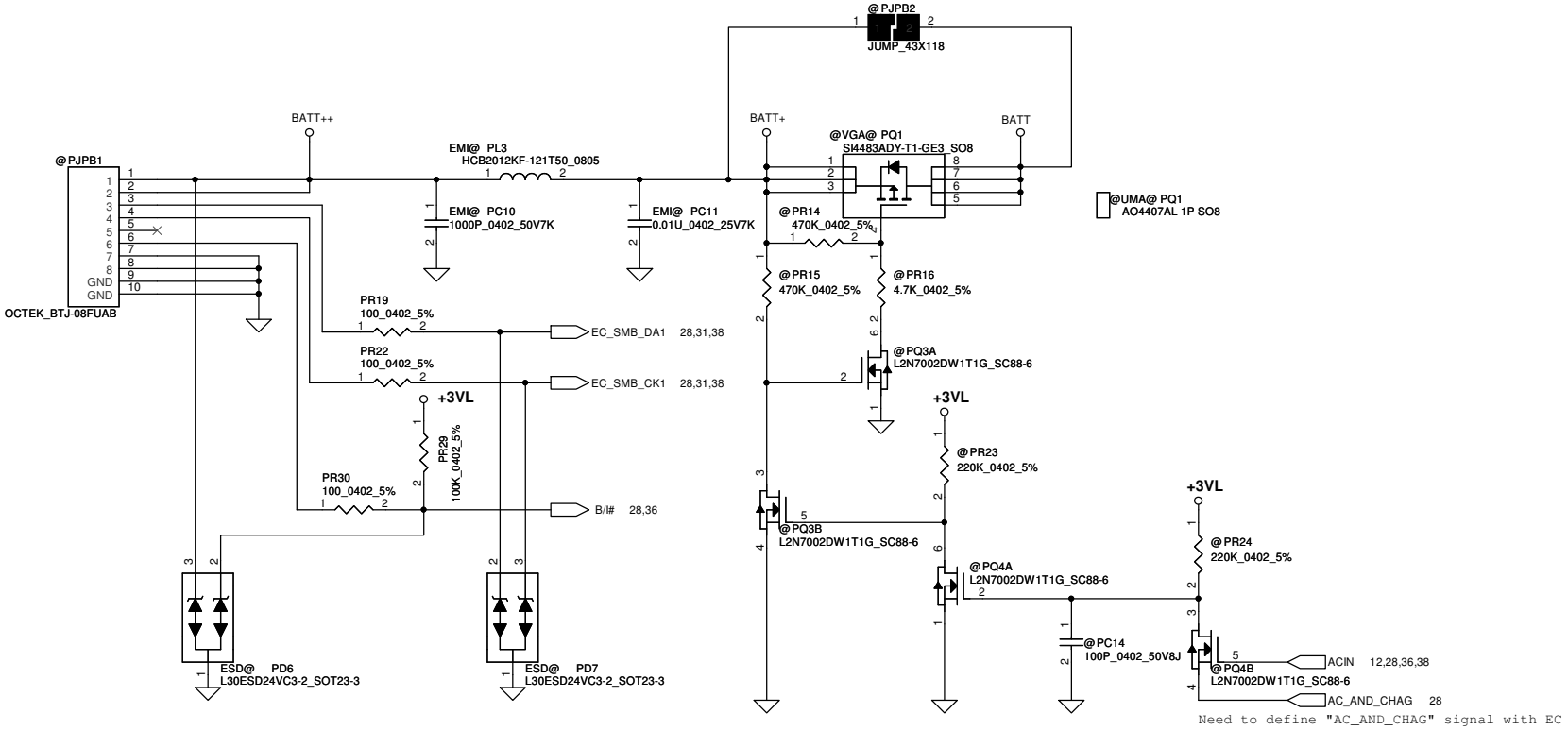

Security Classification	Compal Secret Data		
Issued Date	2013/08/07	Deciphered Date	2016/08/06

THIS SHEET OF ENGINEERING DRAWING IS THE PROPRIETARY PROPERTY OF COMPAL ELECTRONICS, INC. AND CONTAINS CONFIDENTIAL AND TRADE SECRET INFORMATION. THIS SHEET MAY NOT BE TRANSFERED FROM THE CUSTODY OF THE COMPETENT DIVISION OF R&D DEPARTMENT EXCEPT AS AUTHORIZED BY COMPAL ELECTRONICS, INC. NEITHER THIS SHEET NOR THE INFORMATION IT CONTAINS MAY BE USED BY OR DISCLOSED TO ANY THIRD PARTY WITHOUT PRIOR WRITTEN CONSENT OF COMPAL ELECTRONICS, INC.

Compal Electronics, Inc.

Title: ***BATT Conn***

Size | Document Number: **LA-A997P** | Rev: 1.0

Date: Tuesday, May 20, 2014 | Sheet 37 of 47

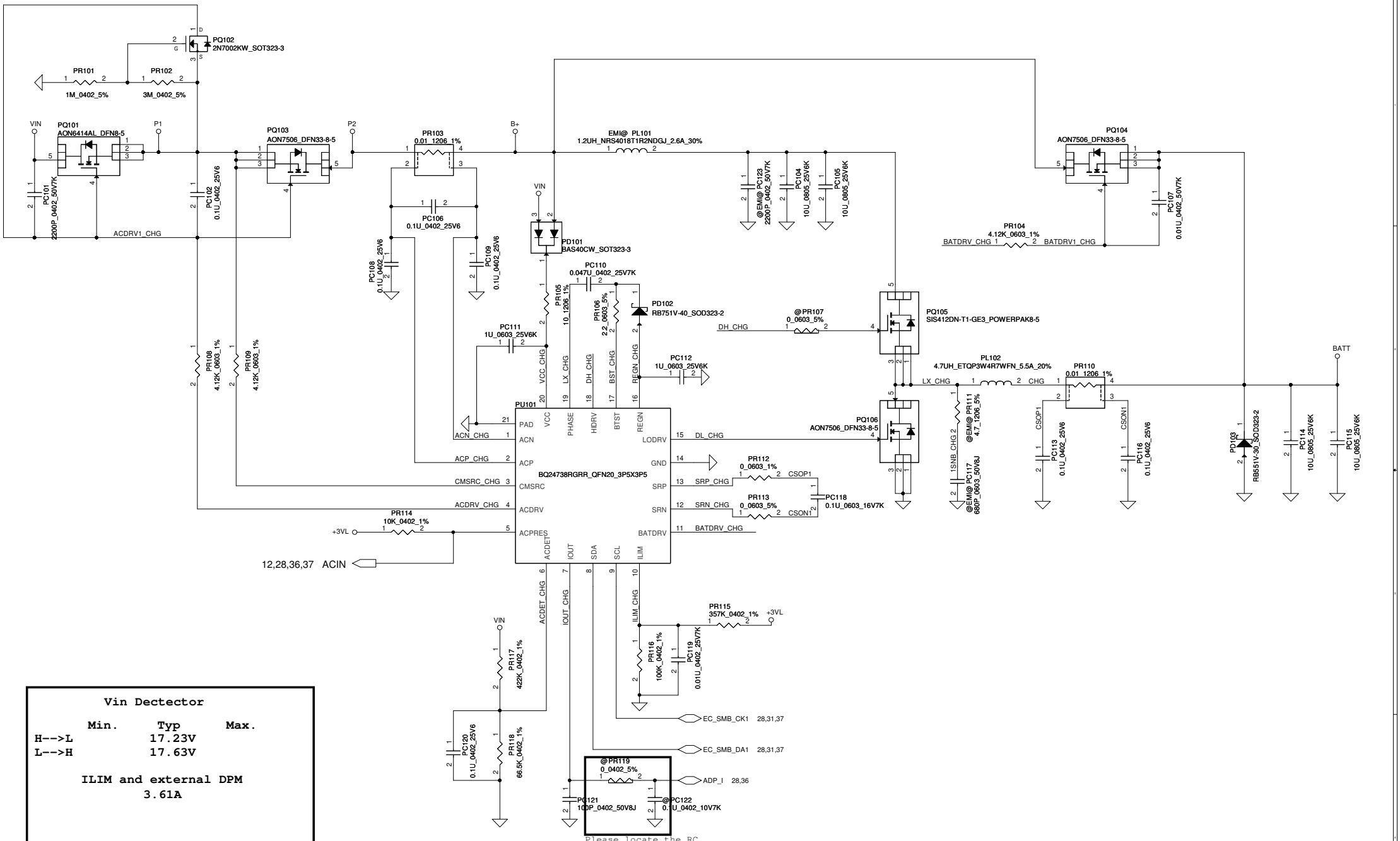

Vin Dectector

	Min.	Typ	Max.
H-->L		17.23V	
L-->H		17.63V	

ILIM and external DPM
3.61A

Security Classification	Compal Secret Data		
Issued Date	2013/08/07	Deciphered Date	2016/08/06

THIS SHEET OF ENGINEERING DRAWING IS THE PROPRIETARY PROPERTY OF COMPAL ELECTRONICS, INC. AND CONTAINS CONFIDENTIAL AND TRADE SECRET INFORMATION. THIS SHEET MAY NOT BE TRANSFERED FROM THE CUSTODY OF THE COMPETENT DIVISION OF R&D DEPARTMENT EXCEPT AS AUTHORIZED BY COMPAL ELECTRONICS, INC. NEITHER THIS SHEET NOR THE INFORMATION IT CONTAINS MAY BE USED BY OR DISCLOSED TO ANY THIRD PARTY WITHOUT PRIOR WRITTEN CONSENT OF COMPAL ELECTRONICS, INC.

Compal Electronics, Inc.

Title: *CHARGER*

Size: Custom | Document Number: LA-A997P | Rev: 1.0

Date: | Sheet 38 of 47

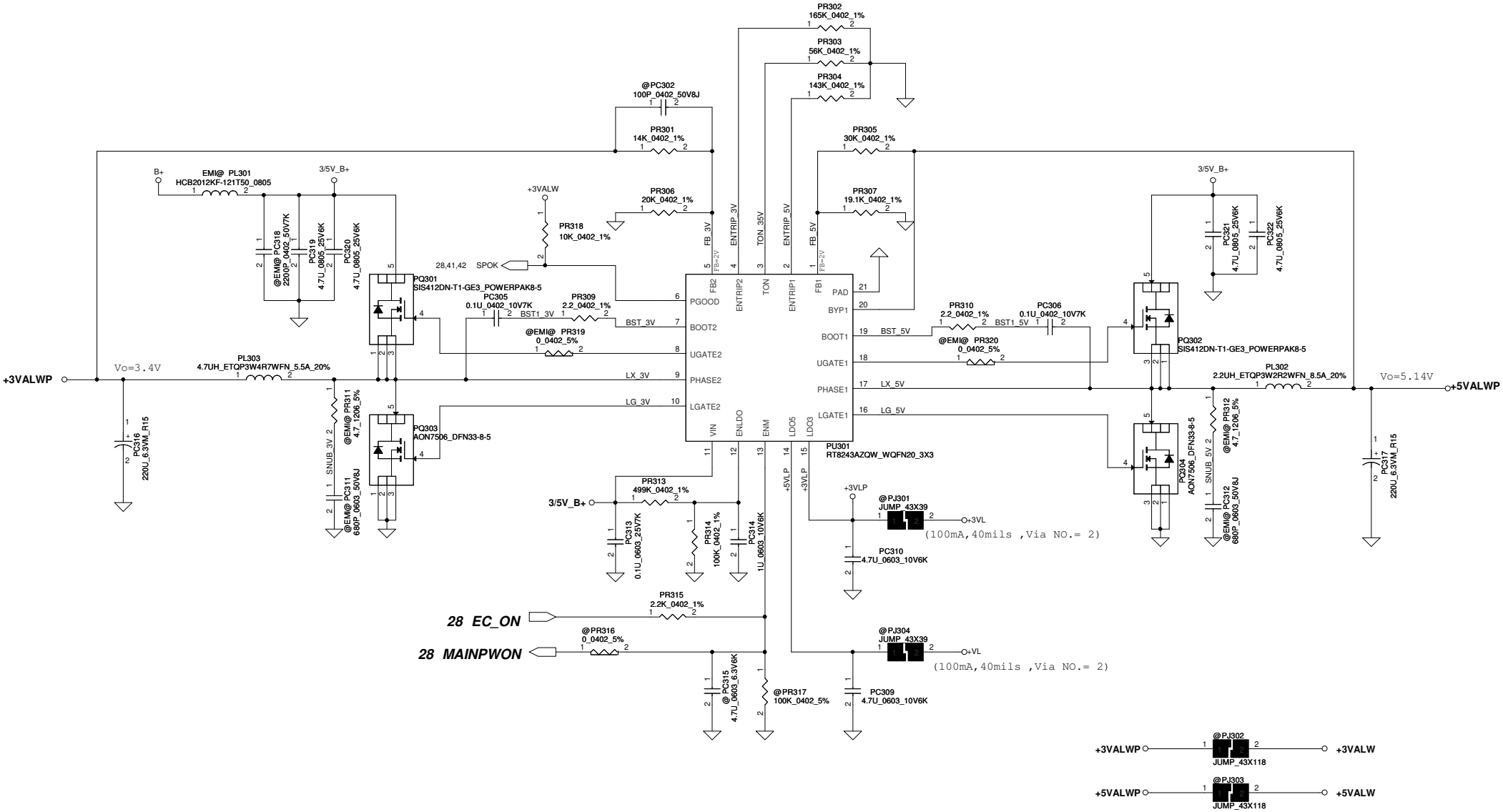

Security Classification	Compal Secret Data			Compal Electronics, Inc.
Issued Date	2013/08/07	Deciphered Date	2016/08/06	Title: 3VALW/5VALW
				Size: Custom; Document Number: LA-A997P; Rev: 1.0
				Date: ; Sheet 39 of 47

THIS SHEET OF ENGINEERING DRAWING IS THE PROPRIETARY PROPERTY OF COMPAL ELECTRONICS, INC. AND CONTAINS CONFIDENTIAL AND TRADE SECRET INFORMATION. THIS SHEET MAY NOT BE TRANSFERED FROM THE CUSTODY OF THE COMPETENT DIVISION OF R&D DEPARTMENT EXCEPT AS AUTHORIZED BY COMPAL ELECTRONICS, INC. NEITHER THIS SHEET NOR THE INFORMATION IT CONTAINS MAY BE USED BY OR DISCLOSED TO ANY THIRD PARTY WITHOUT PRIOR WRITTEN CONSENT OF COMPAL ELECTRONICS, INC.

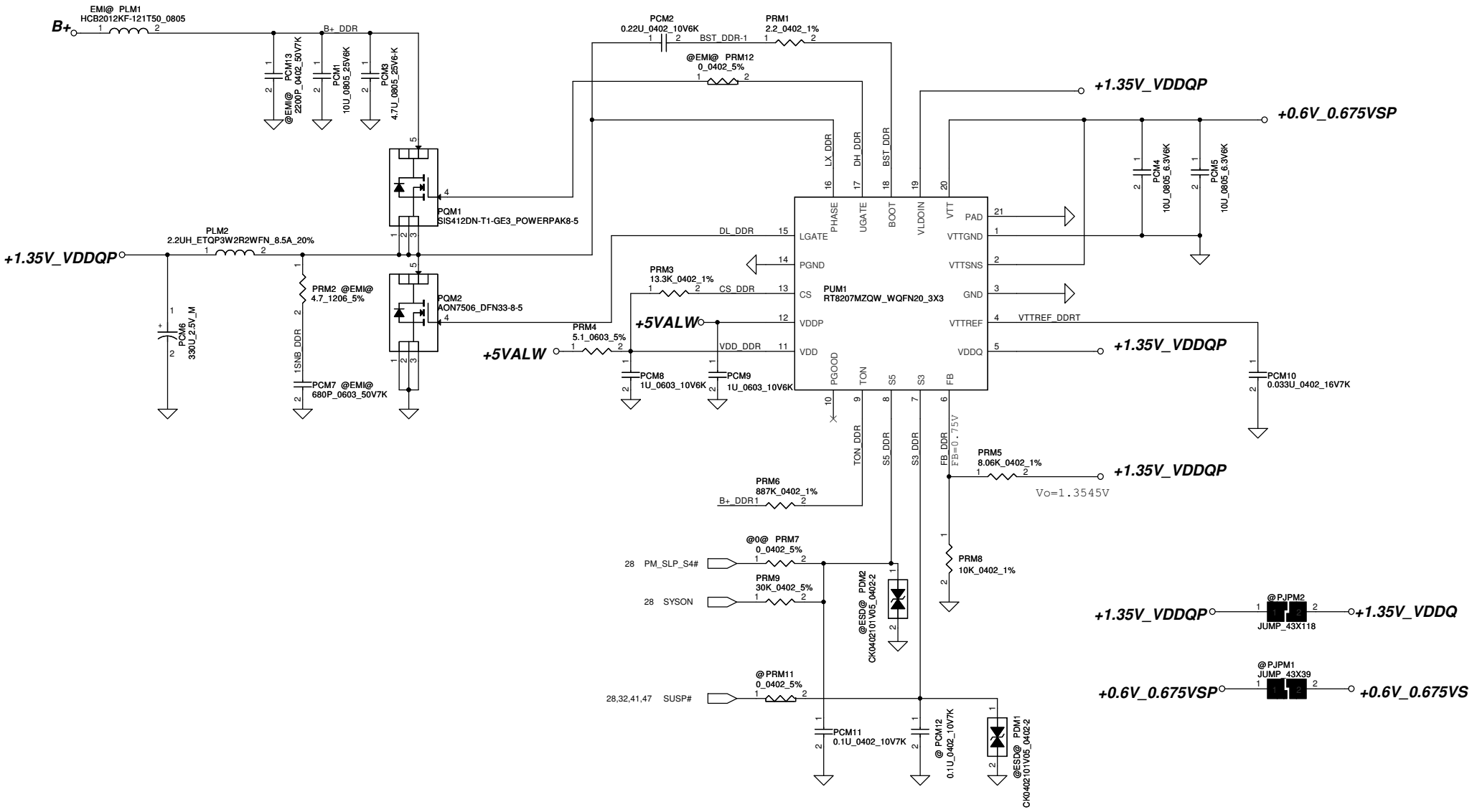

Security Classification	Compal Secret Data		
Issued Date	2013/08/07	Deciphered Date	2016/08/06

THIS SHEET OF ENGINEERING DRAWING IS THE PROPRIETARY PROPERTY OF COMPAL ELECTRONICS, INC. AND CONTAINS CONFIDENTIAL AND TRADE SECRET INFORMATION. THIS SHEET MAY NOT BE TRANSFERED FROM THE CUSTODY OF THE COMPETENT DIVISION OF R&D DEPARTMENT EXCEPT AS AUTHORIZED BY COMPAL ELECTRONICS, INC. NEITHER THIS SHEET NOR THE INFORMATION IT CONTAINS MAY BE USED BY OR DISCLOSED TO ANY THIRD PARTY WITHOUT PRIOR WRITTEN CONSENT OF COMPAL ELECTRONICS, INC.

Compal Electronics, Inc.

Title: **1.35V/0.675VS**

Size: Custom | Document Number: LA-A521P | Rev: 1.0

Date: Tuesday, May 20, 2014 | Sheet 40 of 47

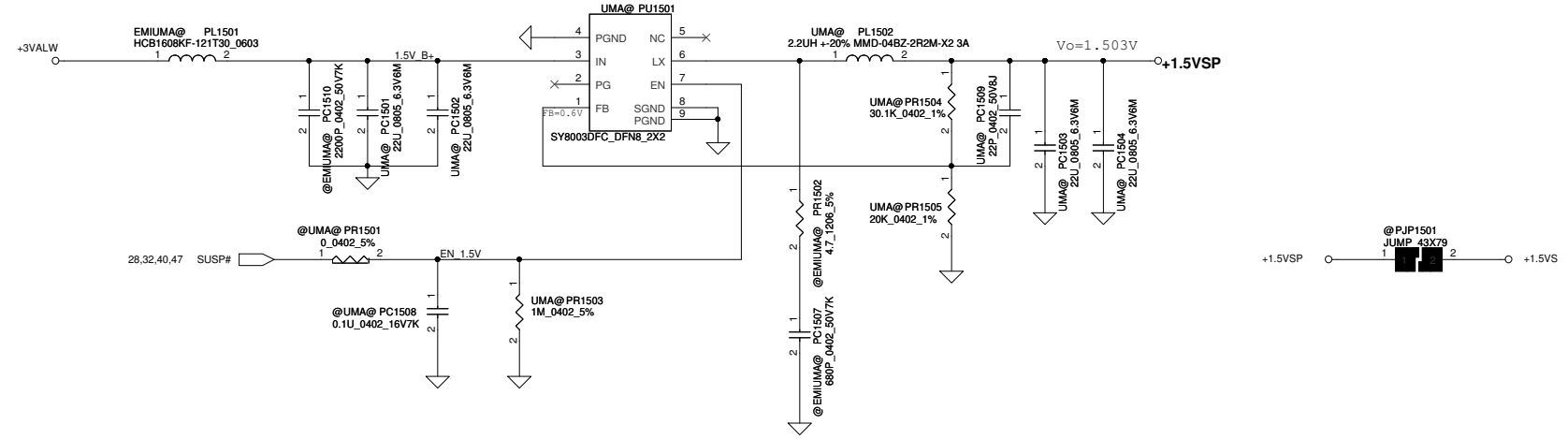

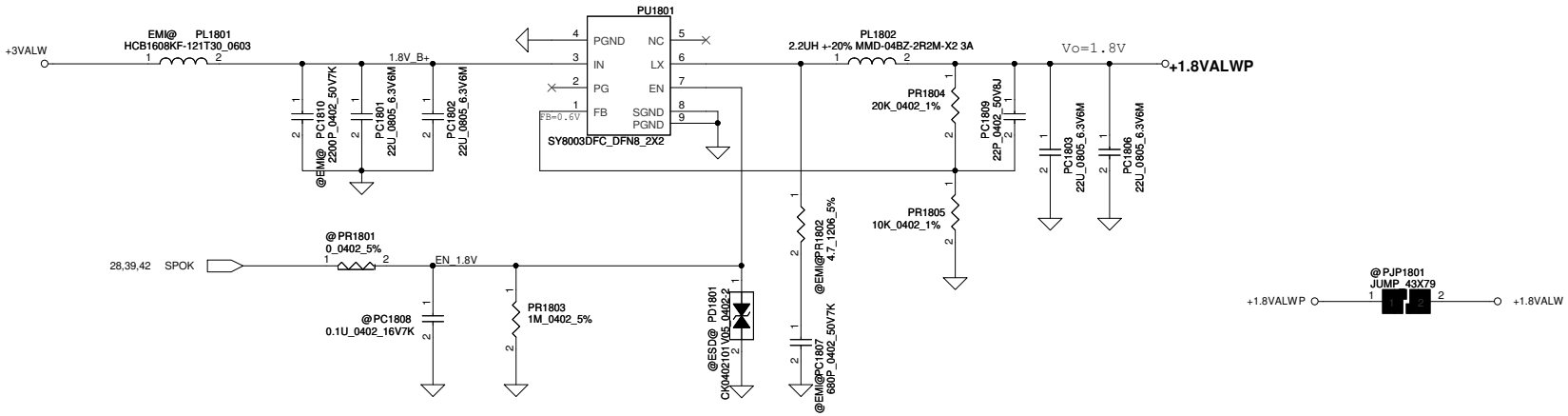

Security Classification	Compal Secret Data		
Issued Date	2013/08/07	Deciphered Date	2016/08/06

THIS SHEET OF ENGINEERING DRAWING IS THE PROPRIETARY PROPERTY OF COMPAL ELECTRONICS, INC. AND CONTAINS CONFIDENTIAL AND TRADE SECRET INFORMATION. THIS SHEET MAY NOT BE TRANSFERED FROM THE CUSTODY OF THE COMPETENT DIVISION OF R&D DEPARTMENT EXCEPT AS AUTHORIZED BY COMPAL ELECTRONICS, INC. NEITHER THIS SHEET NOR THE INFORMATION IT CONTAINS MAY BE USED BY OR DISCLOSED TO ANY THIRD PARTY WITHOUT PRIOR WRITTEN CONSENT OF COMPAL ELECTRONICS, INC.

Compal Electronics, Inc.

Title: *1.5VS/1.8VALW*

Size: Custom | Document Number: LA-A997P | Rev: 1.0

Date: | Sheet 41 of 47

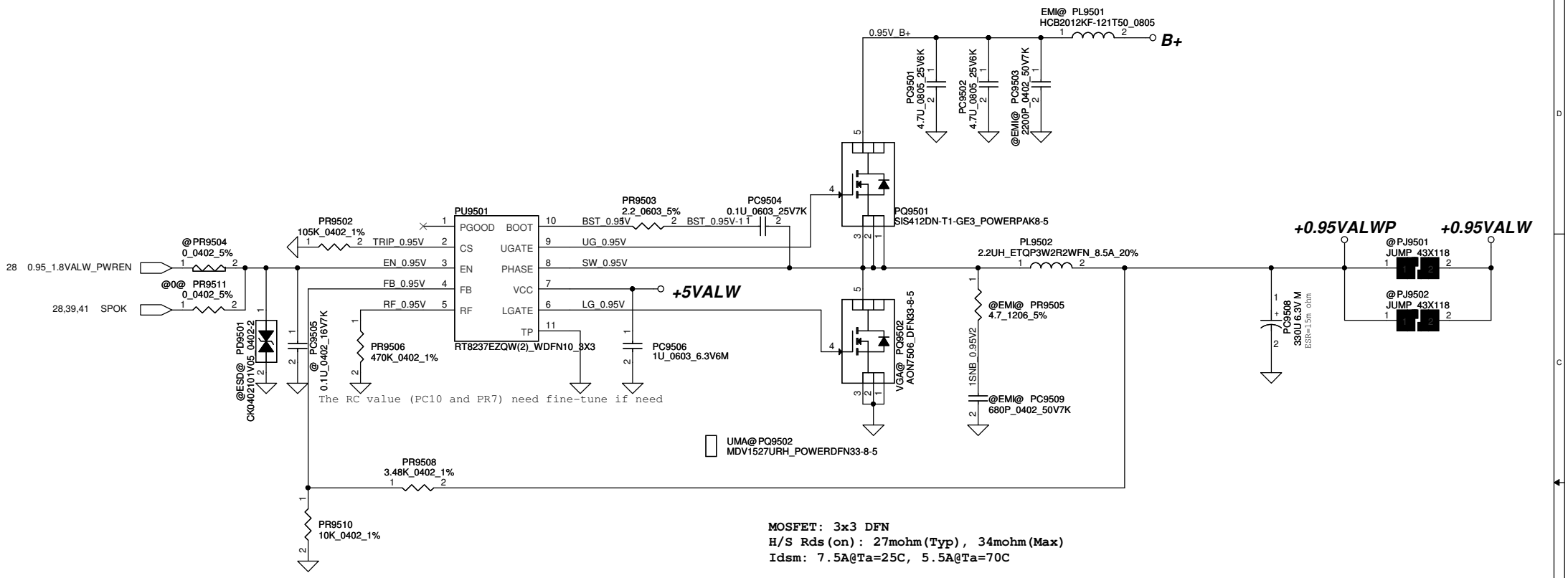

MOSFET: 3x3 DFN
H/S Rds(on): 27mohm(Typ), 34mohm(Max)
Idsm: 7.5A@Ta=25C, 5.5A@Ta=70C

L/S Rds(on): 9.9mohm(Typ), 13mohm(Max)
Idsm: 13.5A@Ta=25C, 11A@Ta=70C

Choke: 7x7x3
Rdc=15.5mohm +/-15%

Switching Frequency: 290kHz
Imax=8A
OCP~10.977A
OVP: 120%~130%
VFB=0.704V, Vout=0.949V
MOSFET footprint: SIS412DN

Security Classification	Compal Secret Data			Compal Electronics, Inc.
Issued Date	2013/08/07	Deciphered Date	2016/08/06	Title: 0.95VALW
				Size: B; Document Number: LA-A997P; Rev: 1.0
				Date: Tuesday, May 20, 2014; Sheet 42 of 47

THIS SHEET OF ENGINEERING DRAWING IS THE PROPRIETARY PROPERTY OF COMPAL ELECTRONICS, INC. AND CONTAINS CONFIDENTIAL AND TRADE SECRET INFORMATION. THIS SHEET MAY NOT BE TRANSFERED FROM THE CUSTODY OF THE COMPETENT DIVISION OF R&D DEPARTMENT EXCEPT AS AUTHORIZED BY COMPAL ELECTRONICS, INC. NEITHER THIS SHEET NOR THE INFORMATION IT CONTAINS MAY BE USED BY OR DISCLOSED TO ANY THIRD PARTY WITHOUT PRIOR WRITTEN CONSENT OF COMPAL ELECTRONICS, INC.

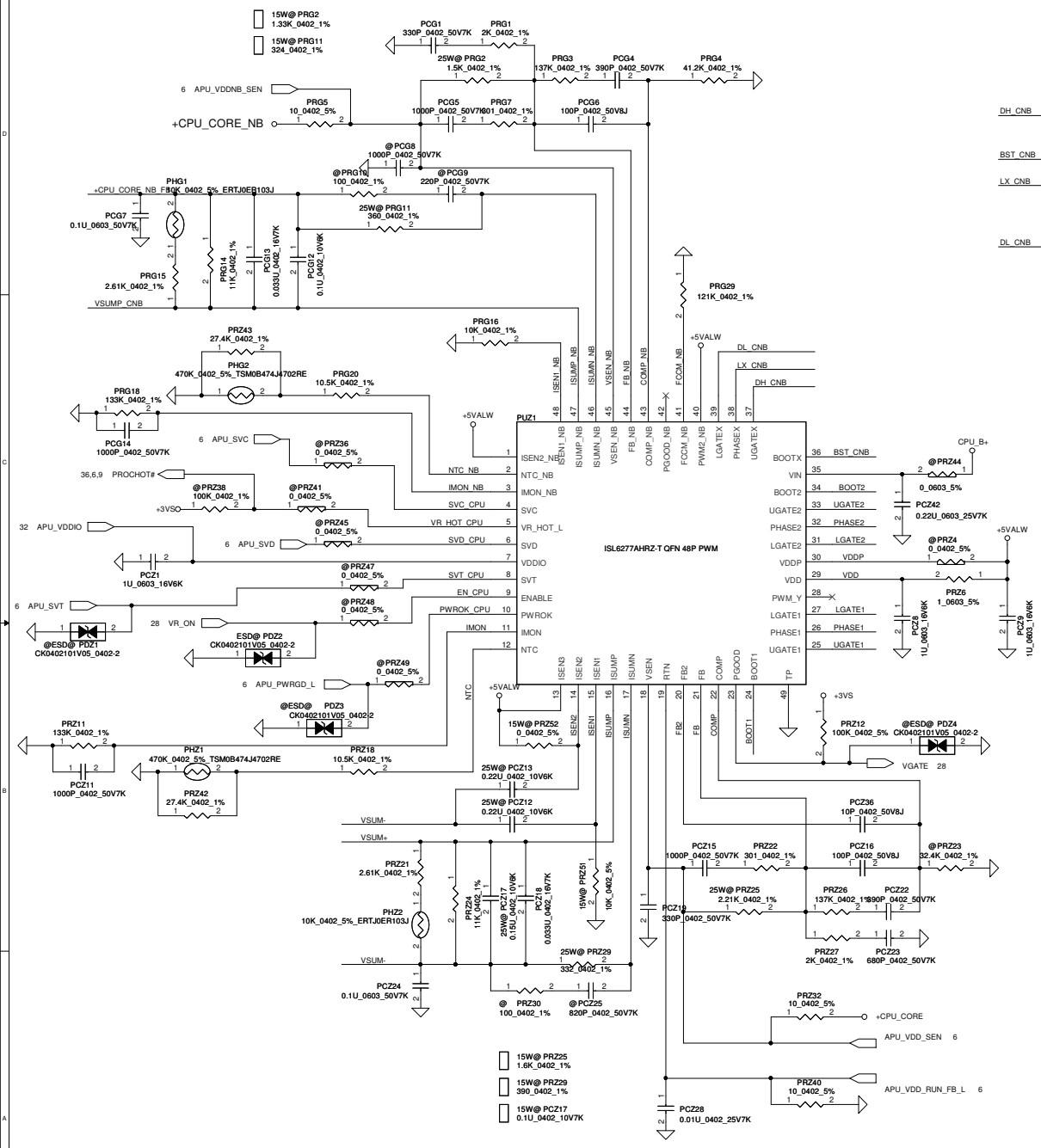

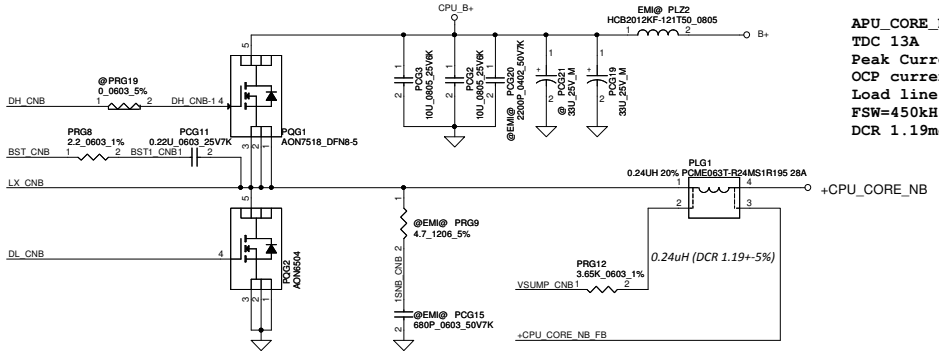

APU_CORE_NB
TDC 13A
Peak Current 17A
OCP current 21A
Load line -4mV/A
FSW=450kHz
DCR 1.19mohm +/-5%

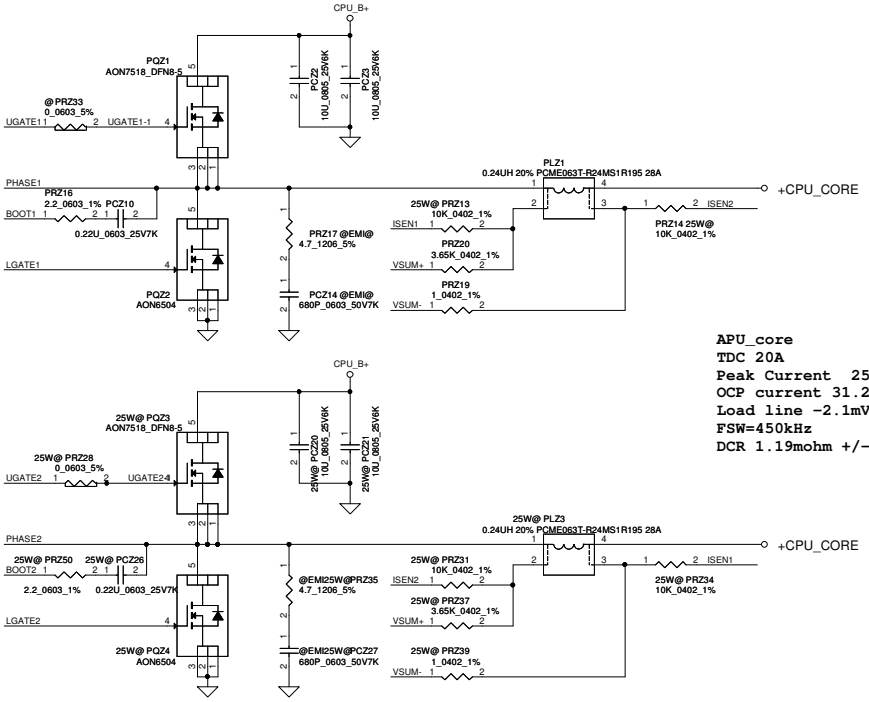

APU_core
TDC 20A
Peak Current 25A
OCP current 31.25A
Load line -2.1mV/A
FSW=450kHz
DCR 1.19mohm +/-5%

Security Classification	Compal Secret Data		
Issued Date	2012/11/07	Deciphered Date	2012/11/07

THIS SHEET OF ENGINEERING DRAWING IS THE PROPRIETARY PROPERTY OF COMPAL ELECTRONICS, INC. AND CONTAINS CONFIDENTIAL AND TRADE SECRET INFORMATION. THIS SHEET MAY NOT BE TRANSFERED FROM THE CUSTODY OF THE COMPETENT DIVISION OF R&D DEPARTMENT EXCEPT AS AUTHORIZED BY COMPAL ELECTRONICS, INC. NEITHER THIS SHEET NOR THE INFORMATION IT CONTAINS MAY BE USED BY OR DISCLOSED TO ANY THIRD PARTY WITHOUT PRIOR WRITTEN CONSENT OF COMPAL ELECTRONICS, INC.

Compal Electronics, Inc.

Title: CPU_CORE/CPU_CORE_NB

Size: Custom | Document Number: LA-A997P | Rev: 1.0

Date: Tuesday, May 20, 2014 | Sheet 43 of 47

+CPU_CORE

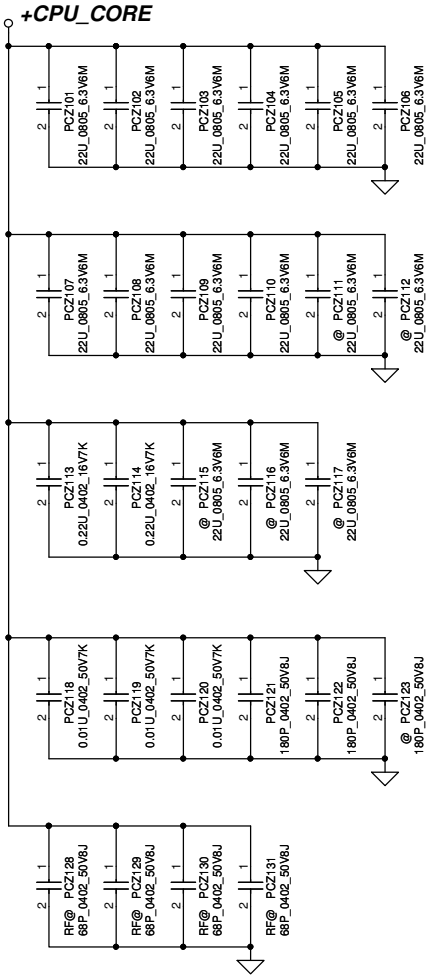

+CPU_CORE Local

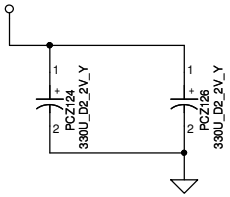

+CPU_CORE_NB

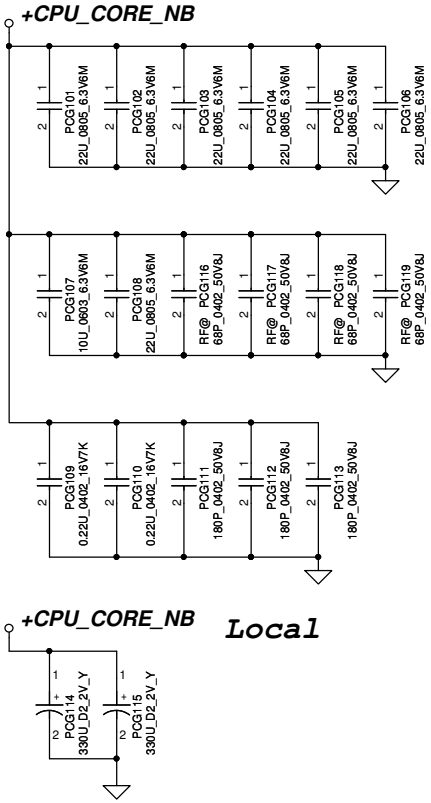

+CPU_CORE_NB Local

	330uF/9m	22uF/0805	0.22uF/0402	10uF/0603	0.01uF/0402	180pF/0402
+CPU_CORE	2	10	2		3	2
+CPU_CORE_NB	2	7	2	1		3

Security Classification	Compal Secret Data		
Issued Date	2012/11/07	Deciphered Date	

THIS SHEET OF ENGINEERING DRAWING IS THE PROPRIETARY PROPERTY OF COMPAL ELECTRONICS, INC. AND CONTAINS CONFIDENTIAL AND TRADE SECRET INFORMATION. THIS SHEET MAY NOT BE TRANSFERED FROM THE CUSTODY OF THE COMPETENT DIVISION OF R&D DEPARTMENT EXCEPT AS AUTHORIZED BY COMPAL ELECTRONICS, INC. NEITHER THIS SHEET NOR THE INFORMATION IT CONTAINS MAY BE USED BY OR DISCLOSED TO ANY THIRD PARTY WITHOUT PRIOR WRITTEN CONSENT OF COMPAL ELECTRONICS, INC.

Compal Electronics, Inc.

Title: **PROCESSOR DECOUPLING**

Size: A3 | Document Number: **LA-A997P** | Rev: 1.0

Date: Tuesday, May 20, 2014 | Sheet 44 of 47

GPIO21	GPIO29	GPIO30	GPIO20	GPIO15		
VID5	VID4	VID3	VID2	VID1	VDDC	
0	1	1	1	1	1.125V	
1	0	0	0	0	1.100V	
1	0	0	0	1	1.075V	
1	0	0	1	0	1.050V	
1	0	0	1	1	1.025V	
1	0	1	0	0	1.000V	
1	0	1	0	1	0.975V	
1	0	1	1	0	0.950V	
1	0	1	1	1	0.925V	
1	1	0	0	0	0.900V	Vboot(merge)
1	1	0	0	1	0.875V	
1	1	0	1	0	0.850V	
1	1	0	1	1	0.825V	
1	1	1	0	0	0.800V	
1	1	1	0	1	0.775V	

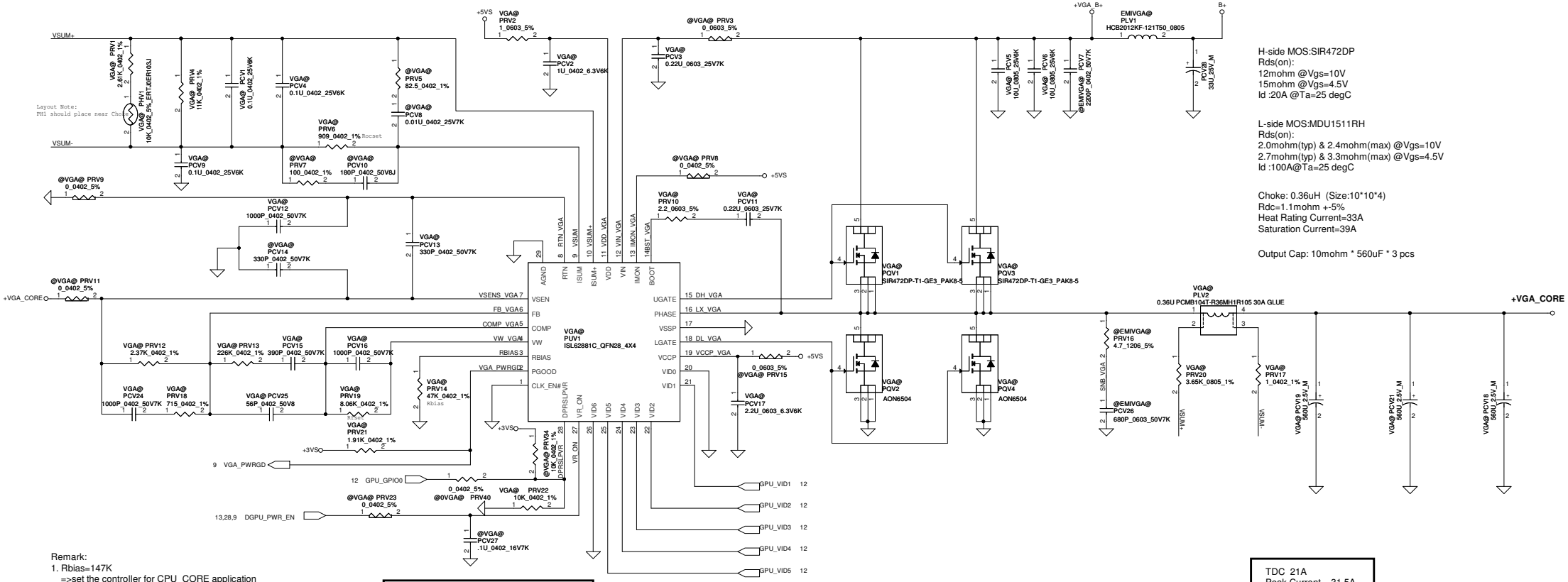

Remark:
1. Rbias=147K
   =>set the controller for CPU_CORE application
   Rbias=47k
   =>set the controller for GPU_CORE application

2. Switching frequency setting:
   Rfset(kohm)=[period(us)-0.29]*2.65
   =8.06Kohm
   Fsw=1/period(us)=300KHZ

3. Operation mode:
   when GPU_CORE VR application
   DPRSLPVR (pin28)=0 => 1 phase CCM mode
   DPRSLPVR (pin28)=1 => 1 phase DE mode

Vboot regulation

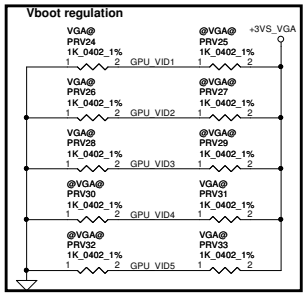

TDC 21A
Peak Current = 31.5A
OCP Current = 37.8A
Load line disable

Module model information:
ISL62881C_V1A for IC
ISL62881C_V1B for SW

Security Classification	Compal Secret Data		
Issued Date	2013/08/07	Deciphered Date	2016/08/06

THIS SHEET OF ENGINEERING DRAWING IS THE PROPRIETARY PROPERTY OF COMPAL ELECTRONICS, INC. AND CONTAINS CONFIDENTIAL AND TRADE SECRET INFORMATION. THIS SHEET MAY NOT BE TRANSFERED FROM THE CUSTODY OF THE COMPETENT DIVISION OF R&D DEPARTMENT EXCEPT AS AUTHORIZED BY COMPAL ELECTRONICS, INC. NEITHER THIS SHEET NOR THE INFORMATION IT CONTAINS MAY BE USED BY OR DISCLOSED TO ANY THIRD PARTY WITHOUT PRIOR WRITTEN CONSENT OF COMPAL ELECTRONICS, INC.

Compal Electronics, Inc.

Title: VGA_CORE

Size: Custom | Document Number: LA-A997P | Rev: 1.0

Date: Tuesday, May 20, 2014 | Sheet 45 of 47

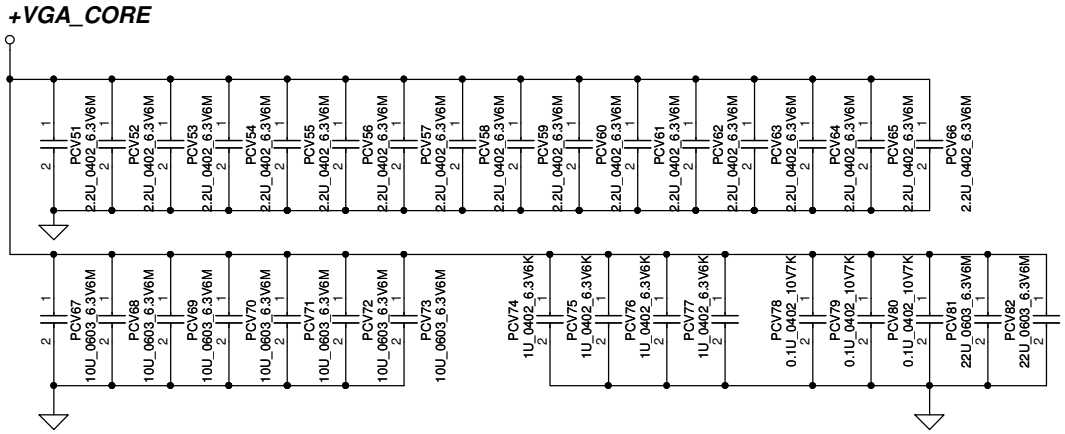

Security Classification	Compal Secret Data		
Issued Date	2013/08/07	Deciphered Date	2016/08/06

THIS SHEET OF ENGINEERING DRAWING IS THE PROPRIETARY PROPERTY OF COMPAL ELECTRONICS, INC. AND CONTAINS CONFIDENTIAL AND TRADE SECRET INFORMATION. THIS SHEET MAY NOT BE TRANSFERED FROM THE CUSTODY OF THE COMPETENT DIVISION OF R&D DEPARTMENT EXCEPT AS AUTHORIZED BY COMPAL ELECTRONICS, INC. NEITHER THIS SHEET NOR THE INFORMATION IT CONTAINS MAY BE USED BY OR DISCLOSED TO ANY THIRD PARTY WITHOUT PRIOR WRITTEN CONSENT OF COMPAL ELECTRONICS, INC.

Compal Electronics, Inc.

Title: VGA CHIP DECOUPLING

Size: B | Document Number: LA-A997P | Rev: 1.0

Date: Tuesday, May 20, 2014 | Sheet 46 of 47

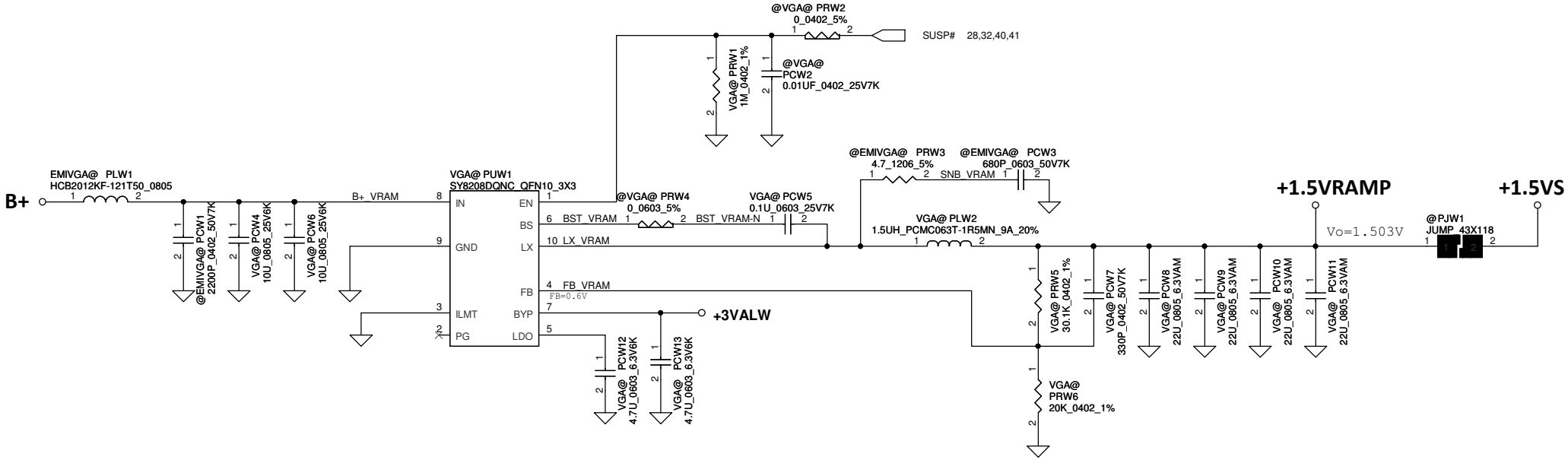

Security Classification	Compal Secret Data		
Issued Date	2013/08/07	Deciphered Date	2016/08/06

THIS SHEET OF ENGINEERING DRAWING IS THE PROPRIETARY PROPERTY OF COMPAL ELECTRONICS, INC. AND CONTAINS CONFIDENTIAL AND TRADE SECRET INFORMATION. THIS SHEET MAY NOT BE TRANSFERED FROM THE CUSTODY OF THE COMPETENT DIVISION OF R&D DEPARTMENT EXCEPT AS AUTHORIZED BY COMPAL ELECTRONICS, INC. NEITHER THIS SHEET NOR THE INFORMATION IT CONTAINS MAY BE USED BY OR DISCLOSED TO ANY THIRD PARTY WITHOUT PRIOR WRITTEN CONSENT OF COMPAL ELECTRONICS, INC.

Compal Electronics, Inc.

Title: **VRAM Power**

Size: B | Document Number | Rev: 1.0

Date: Tuesday, May 20, 2014 | Sheet 47 of 47