Dasher-1 Block Diagram

LDB-1 91.4KH01.001

Jan. 10, 2011

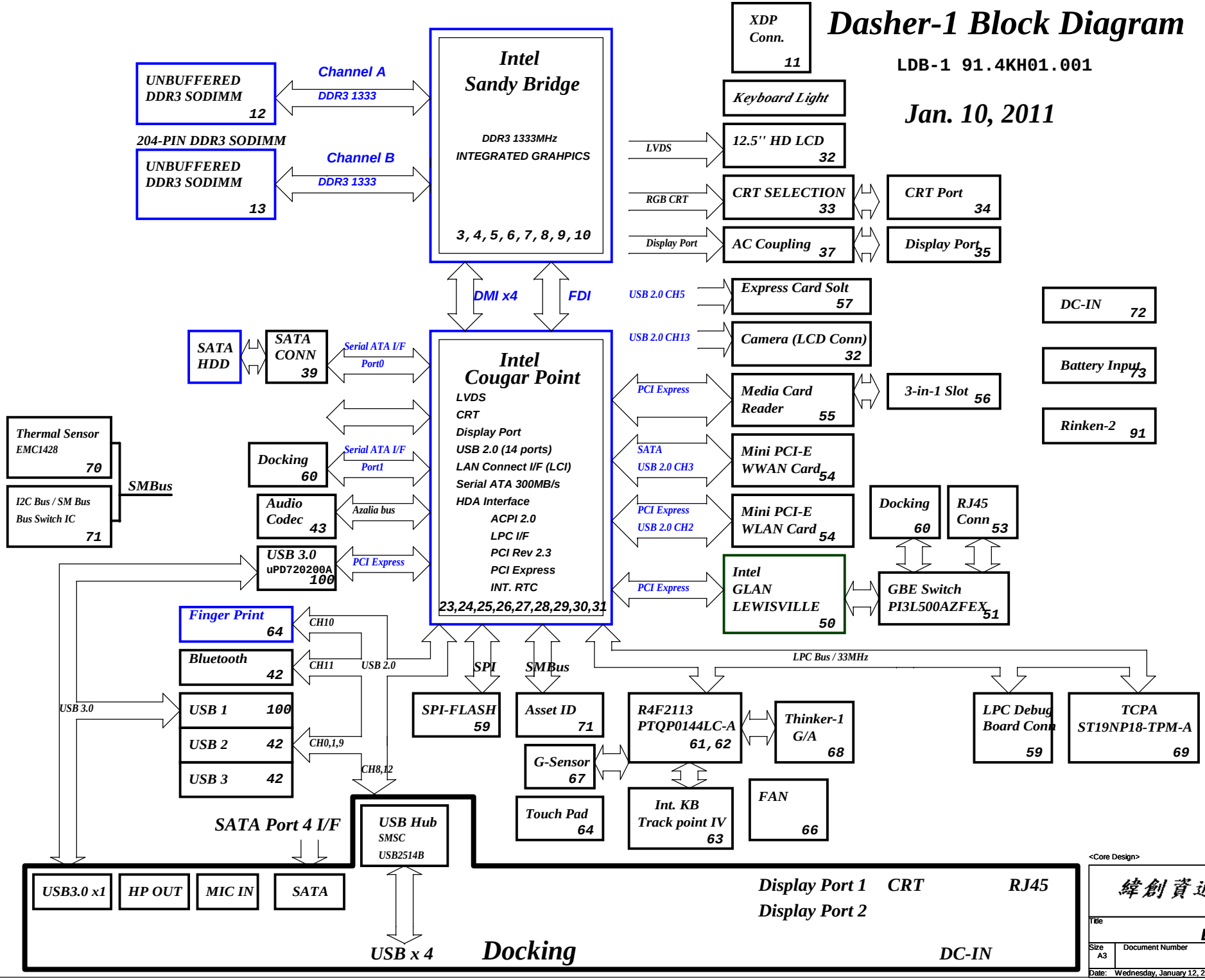

PCB Layer Stackup

L1:Component
L2:GND
L3:Signal 1
L4:VCC
L5:Signal 2
L6:Signal 3
L7:GND
L8:Component

Battery Charger/Selector BQ24742 74	
INPUTS	OUTPUTS
DOCK_PWR20	CHARGER_OUT12
System DC/DC TPS51220ARSN 78	
VINT20	VCC5M VCC3M
CPU DC/DC VT1316/VT1317 79	
VCC5V_OUT	VCCCPUCORE
GMCH GFX CORE VT1317 81	
VCC5V_OUT	VCCGFXCORE
VCC1R5A VT357FCX 86	
VCC5V_OUT	VCC1R5A
VCC0R75B MAX1510 87	
VCC1R5A	VCC0R75B
VCC1R8B TPS62060 89	
VCC5V_OUT	VCC1R8B
VCC1R05AMT VT356FCX 85	
VCC5V_OUT	VCC1R05LAN
VCC1R05B_VTT VT357FCX 84	
VCC5V_OUT	VCC1R05B_VTT
VCCSA VT355FCX 90	
VCC5V_OUT	VCCSA

<Core Design>

緯創資通 Wistron Corporation
21F, 88, Sec.1, Hsin Tai Wu Rd., Hsichih,
Taipei Hsien 221, Taiwan, R.O.C.

Title: Block Diagram

Size: A3 | Document Number: Dasher-1 | Rev: SD

Date: Wednesday, January 12, 2011 | Sheet 1 of 101

RESISTOR

Symbol name	Value	Tolerance (J: 5%, F: 1%, D: 0.5%, B: 0.1 %)	Rating 0402=> 1/16W, 25V 0603 => 1/16W, 75V 0805 => 1/10W, 100V	Size 2=>0402, 3=>0603, 5=>0805, 6=>1206, 0=>1210
10KR3	10K Ohm	If no letter, it means J: 5%	1/16W, 75V	0603
33D3R5	33.3 Ohm	If no letter, it means J: 5%	1/10W, 100V	0805
1KR3F	1K Ohm	F: 1%	1/16W, 75V	0603

The naming rule is value + R + size + tolerance
For the value, it can be read by the number before R. (R means resistor)
For the tolerance, it can be read from the last letter.
For the rating, we don't show on the symbol name.
For the size, R2=>0402, R3=>0603, R5=>0805,....

CAPACITOR

Symbol name	Value	Tolerance (M: +/-20, K: +/-10, Z: +80/-20)	Rating	Size 2=>0402, 3=>0603, 5=>0805, 6=>1206, 0=>1210
SCD1U10V2MX-1	0.1uF	M/X5R	10V	0402
SC10U6D3V5MX	10uF	M/X5R	6.3V	0805
SC2D2U16V5ZY	2.2uF	Z/Y5V	16V	0805

The naming rule is
Capacitor type + value + rating + size + tolerance + material
SCD1U10V2MX-1
SC=> SMT Ceremic, TC=> POS cap or SP cap
D1U => 0.1uF
10V => the voltage rating is 10V
2=> 0402, 3=>0603, 5=>0805
M=>tolerance M, K, Z
X=> X7R/X5R, Y=> Y5V
-1 => symbol version, nonsense to EE characteristic

PLANAR_ID[3..0]

IBEXPEAK-M	39	38	48	49	Planar ID Version	Planar PCB Version
PLANAR_IDn	3	2	1	0		
	0	0	0	0		
	0	0	0	1		
	0	0	1	0	Dasher-1 Pre-DV	SA
	0	0	1	1	Dasher-1 SDV/UT	SB
	0	1	0	0	Dasher-1 MFVT	SC
	0	1	0	1	Dasher-1 FVT	SD
	0	1	1	0	Dasher-1 M-SIT	SE
	0	1	1	1	Dasher-1 SIT	SF
	1	0	0	0	Dasher-1 SVT	-1

EC HISTORY

Stage	Date	EC No.	Page	Note

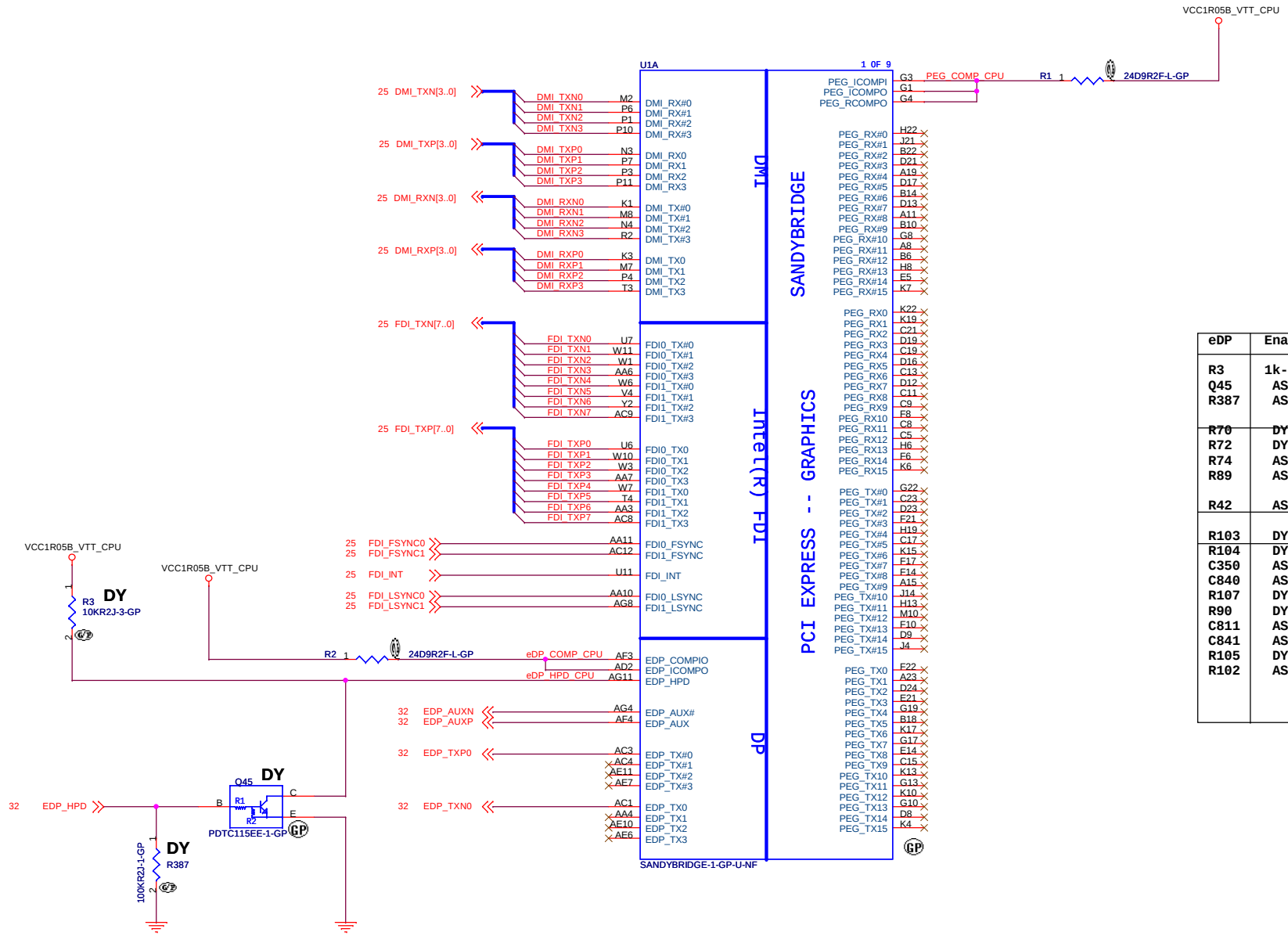

Logic

eDP	Enable	Disable
R3	1k-ohm	10k-ohm
Q45	ASM	DY
R387	ASM	DY
R70	DY	ASM
R72	DY	ASM
R74	ASM	DY
R89	ASM	DY
R42	ASM	DY
R103	DY	ASM
R104	DY	ASM
C350	ASM	DY
C840	ASM	DY
R107	DY	ASM
R90	DY	ASM
C811	ASM	DY
C841	ASM	DY
R105	DY	ASM
R102	ASM	DY

<Core Design>

緯創資通 Wistron Corporation
21F, 88, Sec.1, Hsin Tai Wu Rd., Hsichih,
Taipei Hsien 221, Taiwan, R.O.C.

Title: CPU(1/8):DMI/EDP/PEG/FDI

Size: A3 | Document Number: Dasher-1 | Rev: SD

Date: Monday, January 10, 2011 | Sheet 3 of 101

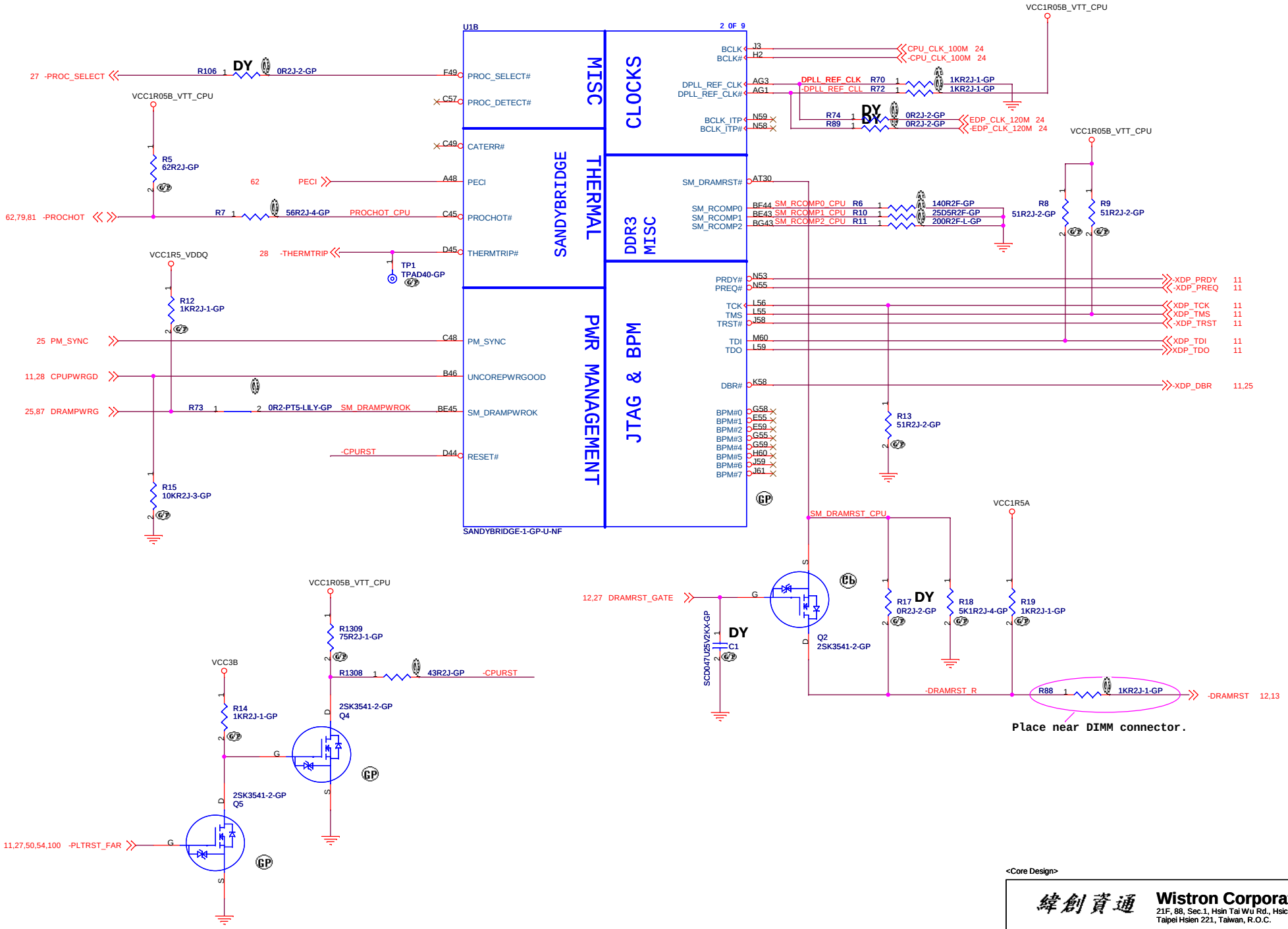

<Core Design>

緯創資通	**Wistron Corporation** 21F, 88, Sec.1, Hsin Tai Wu Rd., Hsichih, Taipei Hsien 221, Taiwan, R.O.C.	
Title	**CPU(2/8):CLK/MISC/JTAG**	
Size A3	Document Number **Dasher-1**	Rev SD
Date: Monday, January 10, 2011	Sheet 4 of 101	

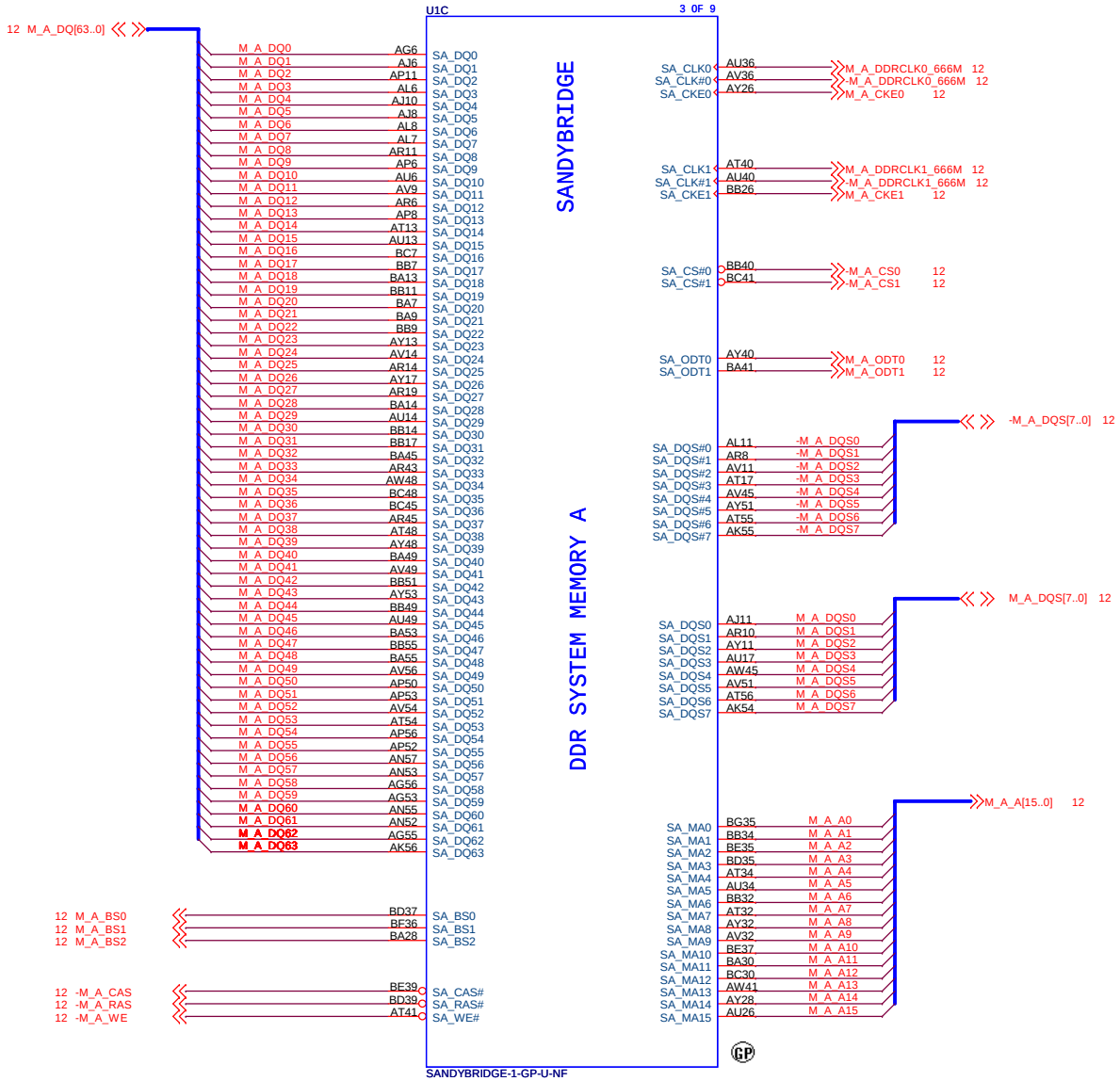

<Core Design>

緯創資通 **Wistron Corporation**
21F, 88, Sec.1, Hsin Tai Wu Rd., Hsichih,
Taipei Hsien 221, Taiwan, R.O.C.

Title: **CPU(3/8):DDR3 Channel-A**

Size	Document Number	Rev
A3	Dasher-1	SD

Date: Monday, January 10, 2011 Sheet 5 of 101

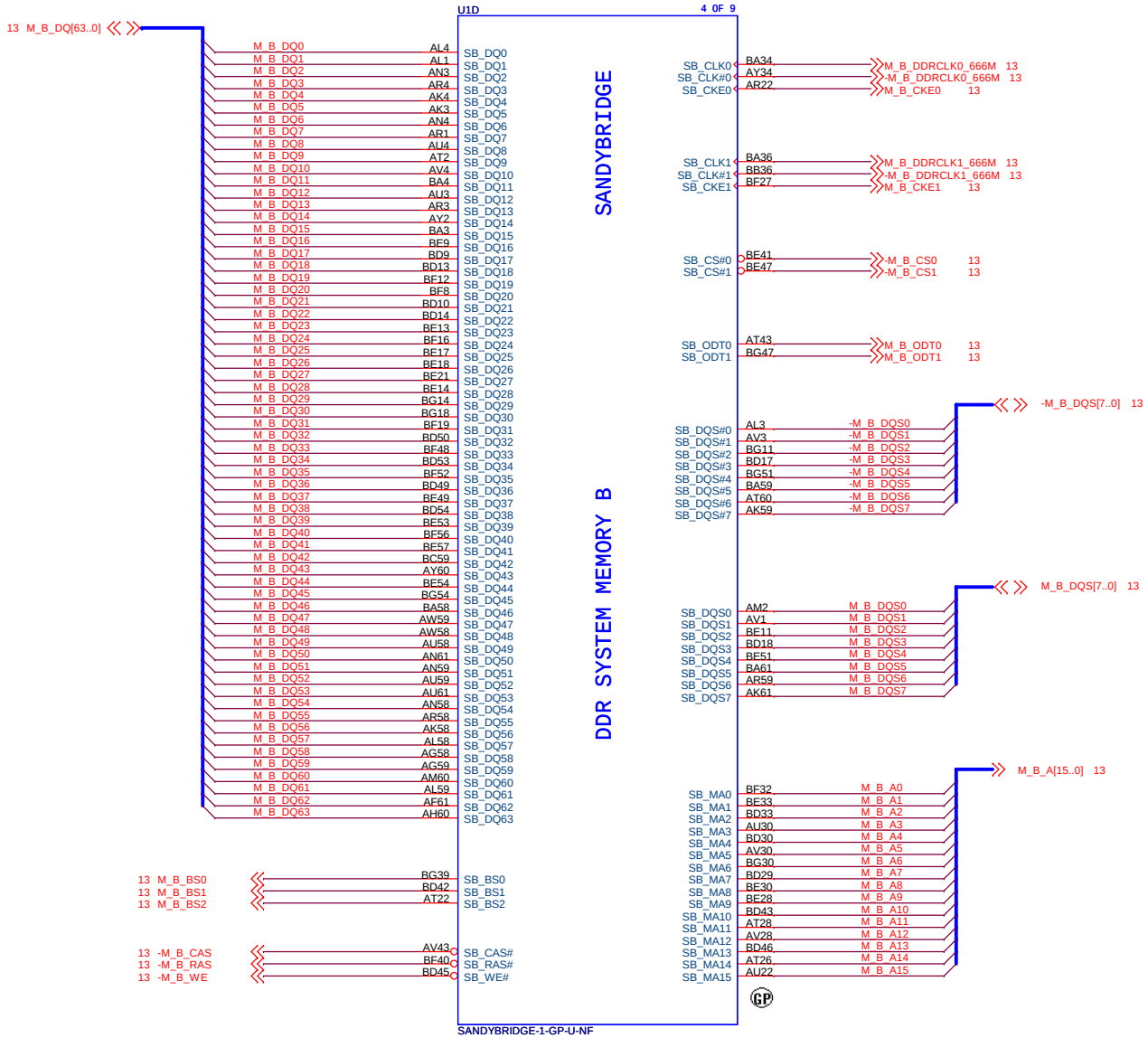

<Core Design>

緯創資通 **Wistron Corporation**
21F, 88, Sec.1, Hsin Tai Wu Rd., Hsichih,
Taipei Hsien 221, Taiwan, R.O.C.

Title: **CPU(4/8):DDR3 Channel-B**

Size	Document Number	Rev
A3	Dasher-1	SD

Date: Monday, January 10, 2011 Sheet 6 of 101

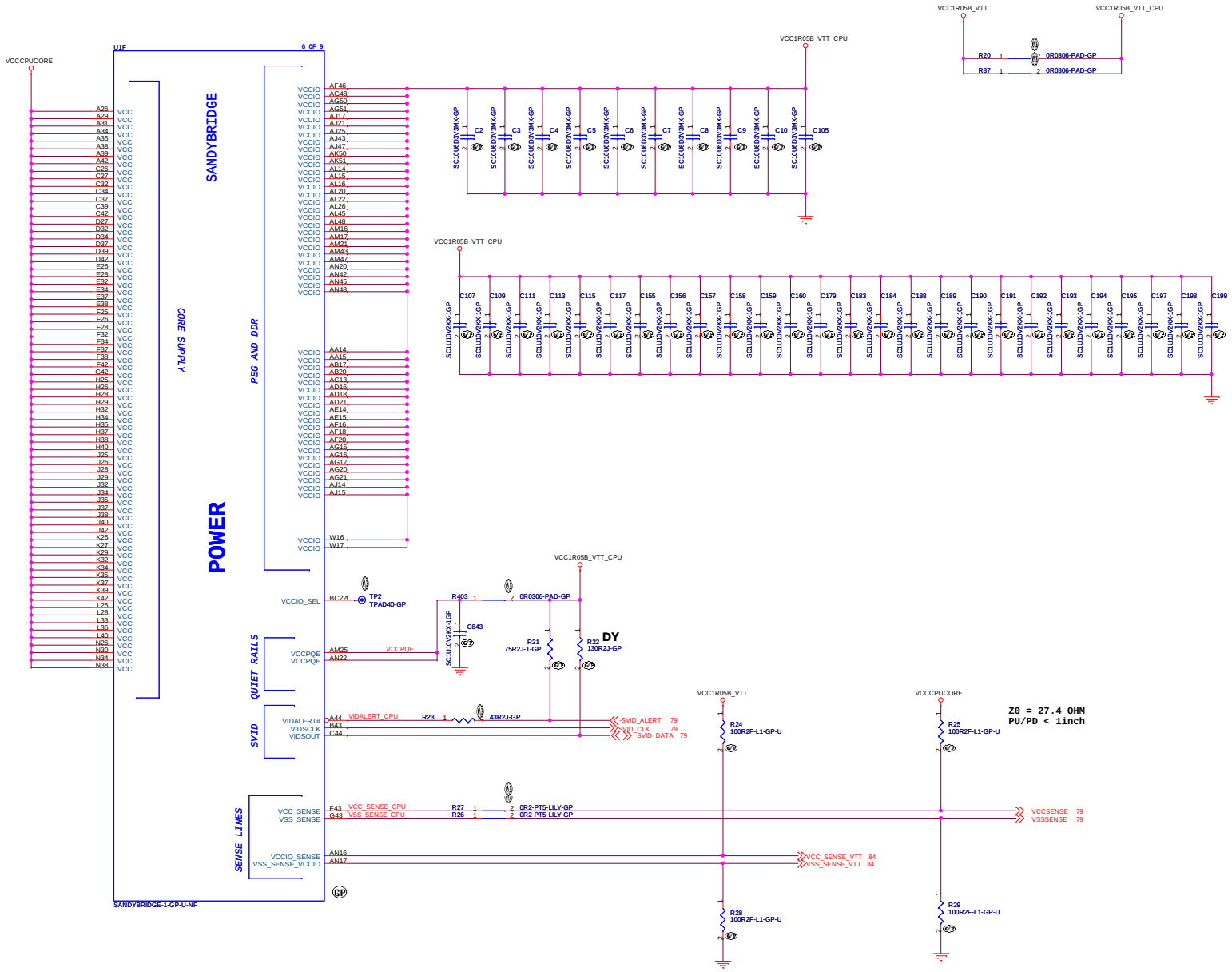

<Core Design>

Wistron Corporation
21F, 88, Sec.1, Hsin Tai Wu Rd., Hsichih,
Taipei Hsien 221, Taiwan, R.O.C.

Title: CPU(5/8):Processor Power

Size	Document Number	Rev
A2	Dasher-1	SD

Date: Monday, January 10, 2011 Sheet 7 of 101

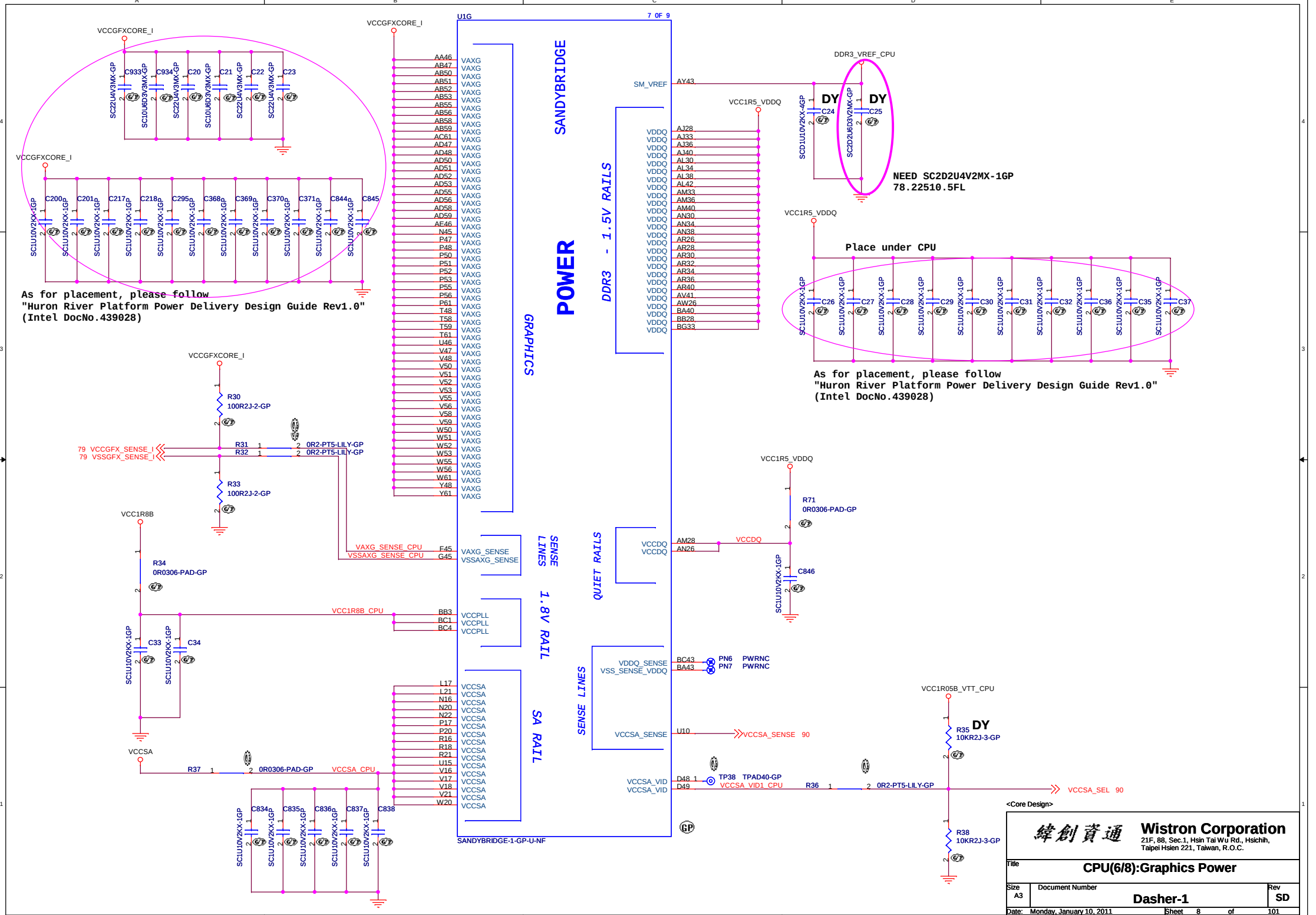
U1G
7 0F 9
SANDYBRIDGE
POWER
GRAPHICS
DDR3 - 1.5V RAILS
QUIET RAILS
SENSE LINES
1.8V RAIL
SA RAIL
SANDYBRIDGE-1-GP-U-NF
VCCGFXCORE_I
C933 SC22U4V3MX-GP
C934 SC22U4V3MX-GP
C20 SC10U6D3V3MX-GP
C21 SC10U6D3V3MX-GP
C22 SC22U4V3MX-GP
C23 SC22U4V3MX-GP
C200 SC1U10V2KX-1GP
C201 SC1U10V2KX-1GP
C217 SC1U10V2KX-1GP
C218 SC1U10V2KX-1GP
C295 SC1U10V2KX-1GP
C368 SC1U10V2KX-1GP
C369 SC1U10V2KX-1GP
C370 SC1U10V2KX-1GP
C371 SC1U10V2KX-1GP
C844 SC1U10V2KX-1GP
C845
As for placement, please follow
"Huron River Platform Power Delivery Design Guide Rev1.0"
(Intel DocNo.439028)
DDR3_VREF_CPU
SM_VREF AY43
VCC1R5_VDDQ
C24 SCD1U10V2KX-4GP
C25 SC2D2U6D3V2MX-GP
DY
DY
NEED SC2D2U4V2MX-1GP
78.22510.5FL
VCC1R5_VDDQ
Place under CPU
C26 SC1U10V2KX-1GP
C27 SC1U10V2KX-1GP
C28 SC1U10V2KX-1GP
C29 SC1U10V2KX-1GP
C30 SC1U10V2KX-1GP
C31 SC1U10V2KX-1GP
C32 SC1U10V2KX-1GP
C36 SC1U10V2KX-1GP
C35 SC1U10V2KX-1GP
C37 SC1U10V2KX-1GP
As for placement, please follow
"Huron River Platform Power Delivery Design Guide Rev1.0"
(Intel DocNo.439028)
VCCGFXCORE_I
R30 100R2J-2-GP
R31 0R2-PT5-LILY-GP
R32 0R2-PT5-LILY-GP
R33 100R2J-2-GP
79 VCCGFX_SENSE_I
79 VSSGFX_SENSE_I
VCC1R8B
R34 0R0306-PAD-GP
VAXG_SENSE_CPU F45
VSSAXG_SENSE_CPU G45
VAXG_SENSE
VSSAXG_SENSE
VCC1R8B_CPU
BB3 BC1 BC4
VCCPLL
C33 SC1U10V2KX-1GP
C34 SC1U10V2KX-1GP
VCCSA
R37 0R0306-PAD-GP
VCCSA_CPU
C834 SC1U10V2KX-1GP
C835 SC1U10V2KX-1GP
C836 SC1U10V2KX-1GP
C837 SC1U10V2KX-1GP
C838 SC1U10V2KX-1GP
VCC1R5_VDDQ
R71 0R0306-PAD-GP
VCCDQ
C846 SC1U10V2KX-1GP
VDDQ_SENSE BC43 PN6 PWRNC
VSS_SENSE_VDDQ BA43 PN7 PWRNC
VCCSA_SENSE U10 VCCSA_SENSE 90
VCCSA_VID D48 TP38 TPAD40-GP
VCCSA_VID D49 VCCSA_VID1_CPU
R36 0R2-PT5-LILY-GP
VCC1R05B_VTT_CPU
R35 10KR2J-3-GP
DY
R38 10KR2J-3-GP
VCCSA_SEL 90
<Core Design>
緯創資通
Wistron Corporation
21F, 88, Sec.1, Hsin Tai Wu Rd., Hsichih,
Taipei Hsien 221, Taiwan, R.O.C.
Title
CPU(6/8):Graphics Power
Size A3
Document Number
Dasher-1
Rev SD
Date: Monday, January 10, 2011
Sheet 8 of 101

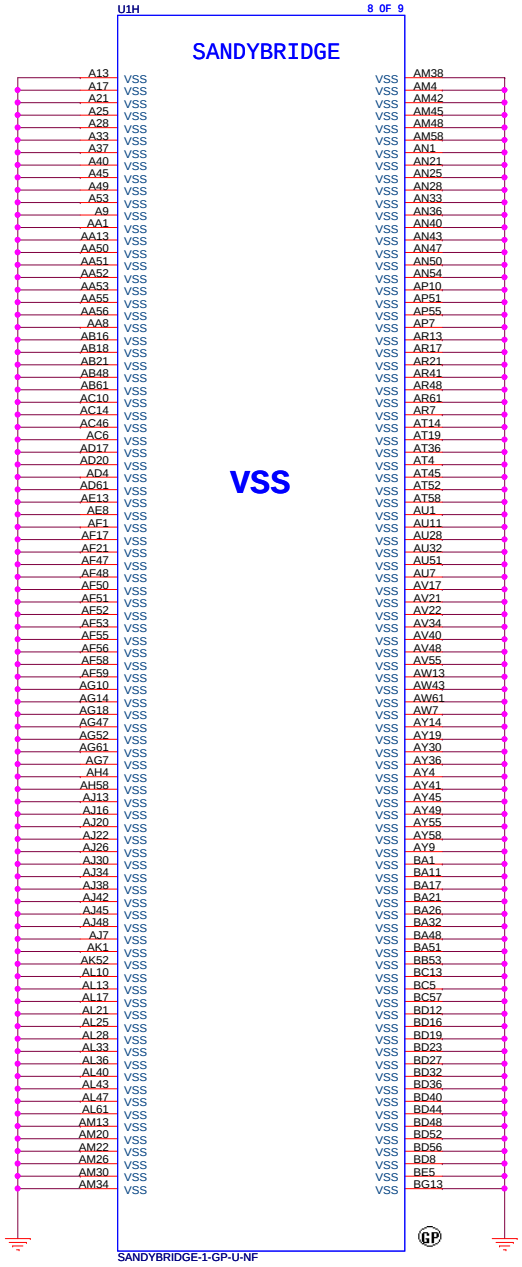

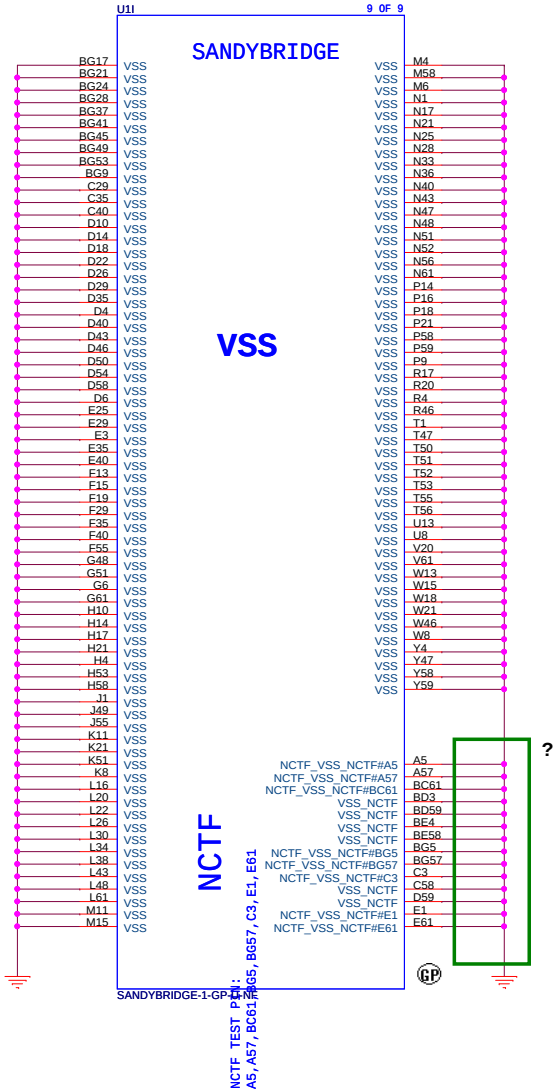

<Core Design>

緯創資通 Wistron Corporation
21F, 88, Sec.1, Hsin Tai Wu Rd., Hsichih,
Taipei Hsien 221, Taiwan, R.O.C.

Title	CPU(7/8):GND	
Size: Custom	Document Number: Dasher-1	Rev: SD
Date: Monday, January 10, 2011	Sheet 9 of 101	

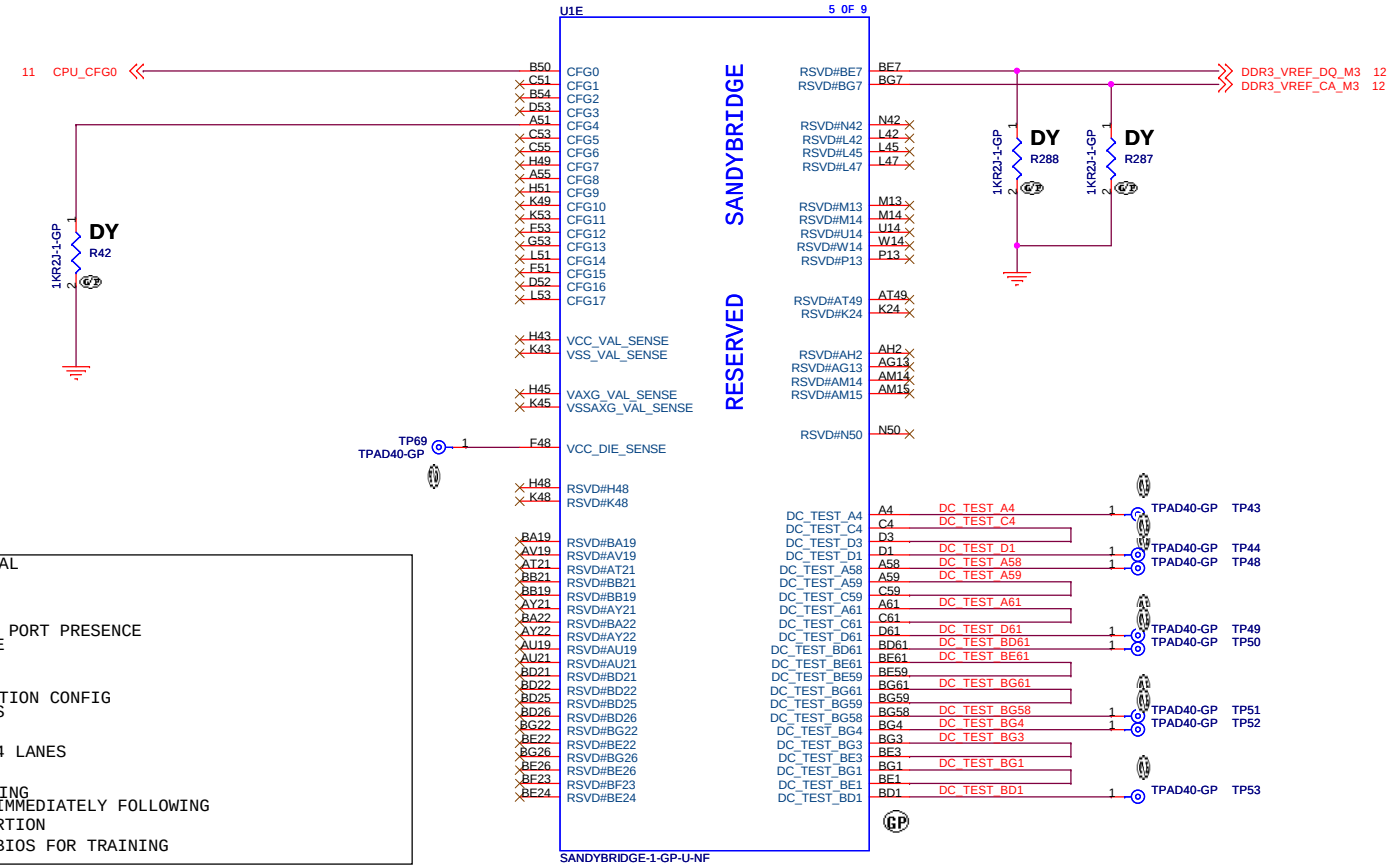


```
CFG2 PEG LANE REVERSAL
   1 NO-ASM : NORMAL
   0 ASM : REVERSE

CFG4 Embeded DISPLAY PORT PRESENCE
   1 NO-ASM : DISABLE
   0 ASM : ENABLE

CFG[6:5] PEG BIFURCATION CONFIG
   11 SINGLE 16 LANES
   10 2x8 LANES
   01 RESERVED
   00 8 LANES AND 2x4 LANES

CFG7 PEG DEFER TRAINING
   1 NO_ASM : TRAIN IMMEDIATELY FOLLOWING
     XXRESETB DEASSERTION
   0 ASM : WAIT FOR BIOS FOR TRAINING
```

<Core Design>

緯創資通 **Wistron Corporation**
21F, 88, Sec.1, Hsin Tai Wu Rd., Hsichih,
Taipei Hsien 221, Taiwan, R.O.C.

Title: **CPU(8/8):CFG/Reserved**

Size	Document Number	Rev
A3	Dasher-1	SD

Date: Monday, January 10, 2011 Sheet 10 of 101

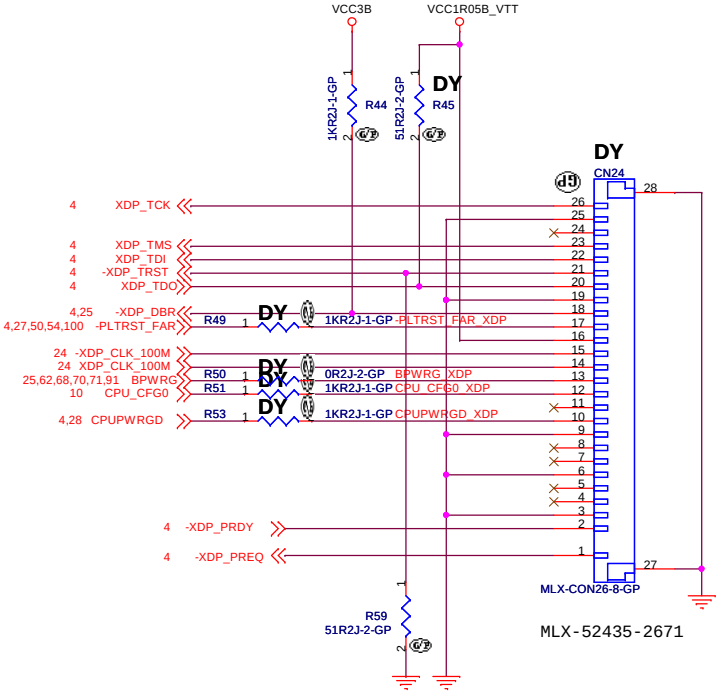

DEBUG Interface for Processor.

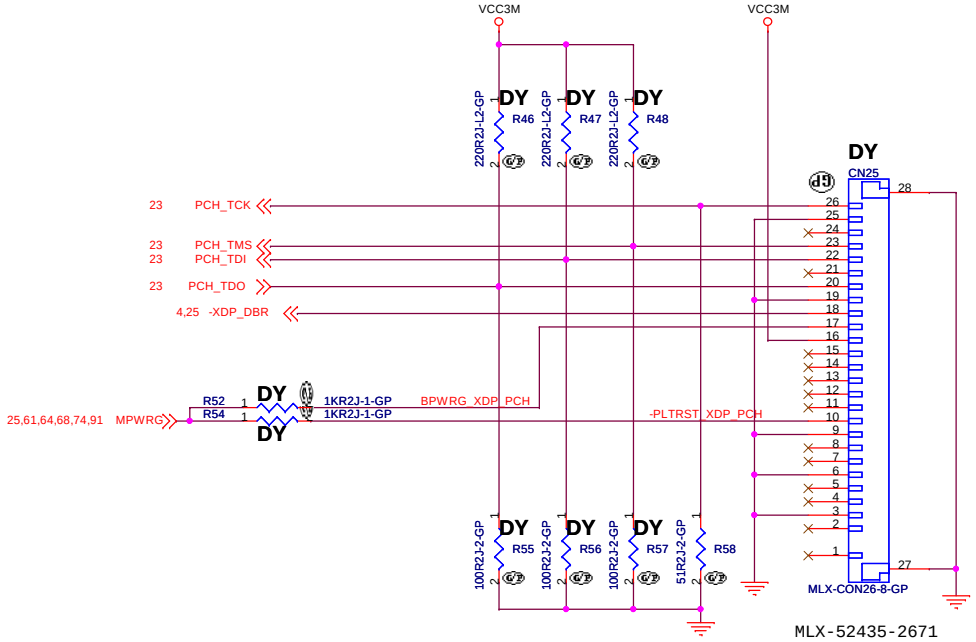

DEBUG Interface for PCH.

XDP1

		ENABLE	DISABLE
TDO	R45	ASM	DY
TRST#	R59	ASM	ASM
DBRST#	R44	ASM	ASM
RESET#	R49	ASM	DY
CFG0	R51	ASM	DY
PWRGD	R53	ASM	DY
BPWRG	R50	ASM	DY
	CN24	ASM	DY

SIT Logic

XDP2

		ENABLE	DISABLE
TDO	R46	220	DY
	R55	100	DY
TMS	R48	220	DY
	R57	100	DY
TDI	R47	220	DY
	R56	100	DY
TCK	R58	51	51
MPWRG	R52	ASM	DY
	R54	ASM	DY
	CN25	ASM	DY

SIT Logic

<Core Design>

緯創資通 **Wistron Corporation**
21F, 88, Sec.1, Hsin Tai Wu Rd., Hsichih,
Taipei Hsien 221, Taiwan, R.O.C.

Title: ***XDP Connector***

Size: A3 | Document Number: **Dasher-1** | Rev: **SD**

Date: Monday, January 10, 2011 | Sheet 11 of 101

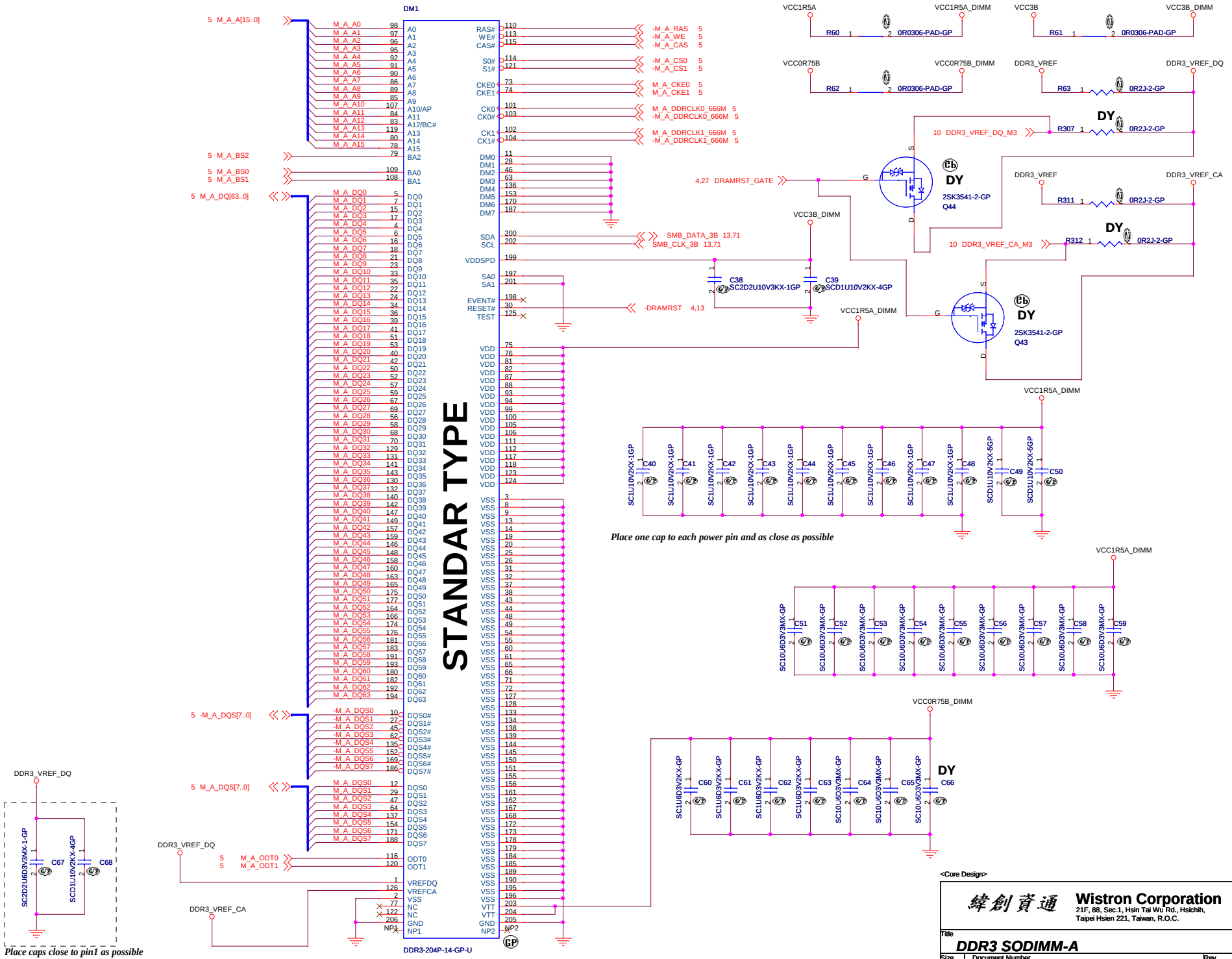
DM1
STANDAR TYPE
DDR3-204P-14-GP-U
5 M_A_A[15..0]
5 M_A_BS2
5 M_A_BS0
5 M_A_BS1
5 M_A_DQ[63..0]
5 -M_A_DQS[7..0]
5 M_A_DQS[7..0]
5 M_A_ODT0
5 M_A_ODT1
-M_A_RAS 5
-M_A_WE 5
-M_A_CAS 5
-M_A_CS0 5
-M_A_CS1 5
M_A_CKE0 5
M_A_CKE1 5
M_A_DDRCLK0_666M 5
-M_A_DDRCLK0_666M 5
M_A_DDRCLK1_666M 5
-M_A_DDRCLK1_666M 5
SMB_DATA_3B 13,71
SMB_CLK_3B 13,71
-DRAMRST 4,13
VCC1R5A
VCC1R5A_DIMM
VCC3B
VCC3B_DIMM
VCC0R75B
VCC0R75B_DIMM
R60 0R0306-PAD-GP
R61 0R0306-PAD-GP
R62 0R0306-PAD-GP
DDR3_VREF
DDR3_VREF_DQ
R63 0R2J-2-GP
DY
R307 0R2J-2-GP
10 DDR3_VREF_DQ_M3
4,27 DRAMRST_GATE
2SK3541-2-GP
Q44
DDR3_VREF_CA
R311 0R2J-2-GP
R312 0R2J-2-GP
10 DDR3_VREF_CA_M3
Q43
C38 SC2D2U10V3KX-1GP
C39 SCD1U10V2KX-4GP
C40 SC1U10V2KX-1GP
C41 SC1U10V2KX-1GP
C42 SC1U10V2KX-1GP
C43 SC1U10V2KX-1GP
C44 SC1U10V2KX-1GP
C45 SC1U10V2KX-1GP
C46 SC1U10V2KX-1GP
C47 SC1U10V2KX-1GP
C48 SC1U10V2KX-1GP
C49 SCD1U10V2KX-5GP
C50 SCD1U10V2KX-5GP
Place one cap to each power pin and as close as possible
C51 SC10U6D3V3MX-GP
C52 SC10U6D3V3MX-GP
C53 SC10U6D3V3MX-GP
C54 SC10U6D3V3MX-GP
C55 SC10U6D3V3MX-GP
C56 SC10U6D3V3MX-GP
C57 SC10U6D3V3MX-GP
C58 SC10U6D3V3MX-GP
C59 SC10U6D3V3MX-GP
C60 SC1U6D3V2KX-GP
C61 SC1U6D3V2KX-GP
C62 SC1U6D3V2KX-GP
C63 SC1U6D3V2KX-GP
C64 SC10U6D3V3MX-GP
C65 SC10U6D3V3MX-GP
C66
C67 SC2D2U6D3V3MX-1-GP
C68 SCD1U10V2KX-4GP
Place caps close to pin1 as possible
<Core Design>
Wistron Corporation
21F, 88, Sec.1, Hsin Tai Wu Rd., Hsichih,
Taipei Hsien 221, Taiwan, R.O.C.
Title
DDR3 SODIMM-A
Size Custom
Document Number
Dasher-1
Rev SD
Date: Monday, January 10, 2011
Sheet 12 of 101

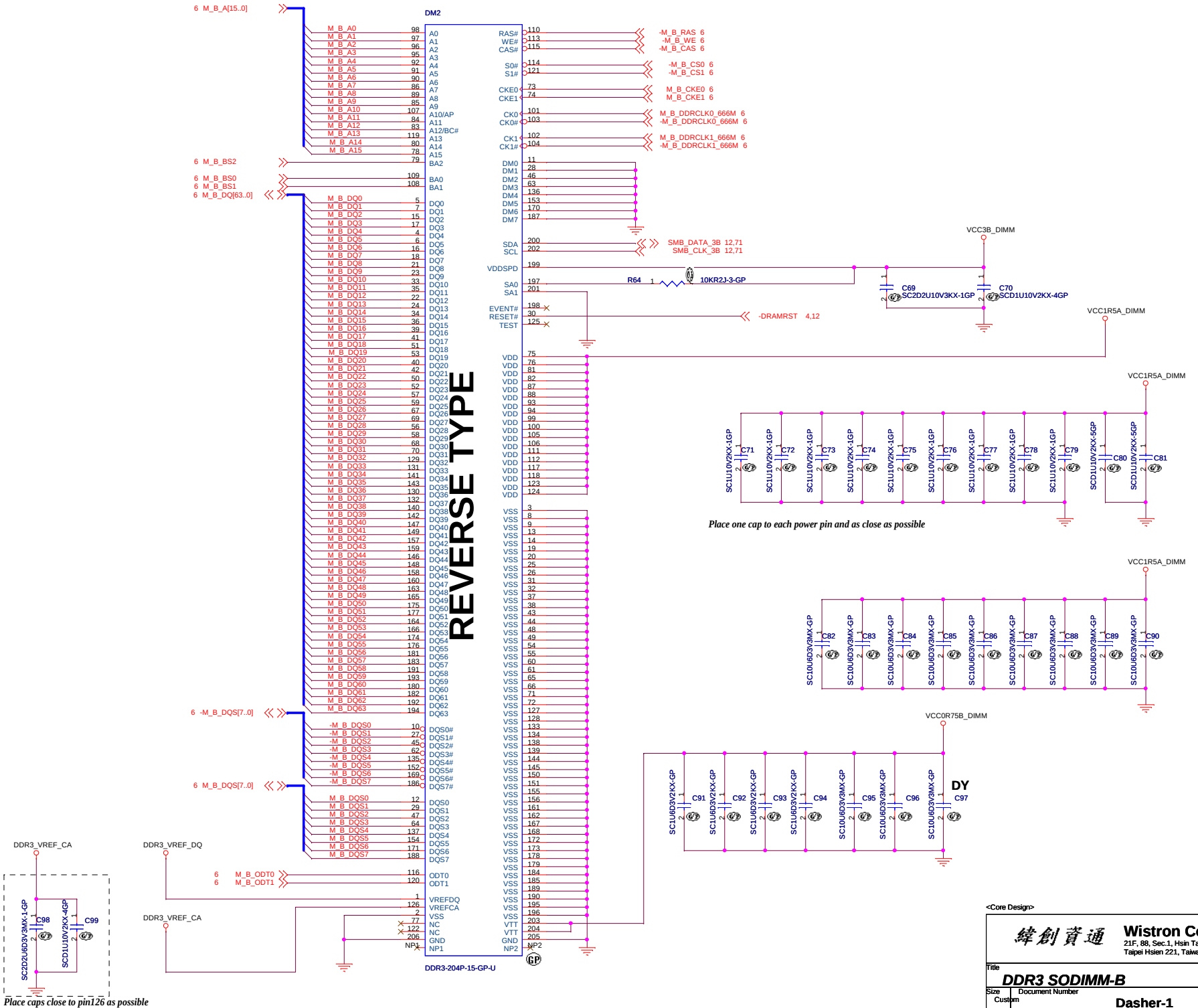

<Core Design>

Wistron Corporation
21F, 88, Sec.1, Hsin Tai Wu Rd., Hsichih, Taipei Hsien 221, Taiwan, R.O.C.

Title: DDR3 SODIMM-B

Size: Custom | Document Number: Dasher-1 | Rev: SD

Date: Monday, January 10, 2011 | Sheet 13 of 101

B

L

A

N

K

<Core Design>

緯創資通 Wistron Corporation
21F, 88, Sec.1, Hsin Tai Wu Rd., Hsichih,
Taipei Hsien 221, Taiwan, R.O.C.

Title
BLANK

Size	Document Number	Rev
A3	Dasher-1	SD

Date: Monday, January 10, 2011 Sheet 14 of 101

B

L

A

N

K

<Core Design>

緯創資通 **Wistron Corporation**
21F, 88, Sec.1, Hsin Tai Wu Rd., Hsichih,
Taipei Hsien 221, Taiwan, R.O.C.

Title
BLANK

Size	Document Number	Rev
A3	**Dasher-1**	**SD**

Date: Monday, January 10, 2011 Sheet 15 of 101

B

L

A

N

K

<Core Design>

緯創資通 **Wistron Corporation**
21F, 88, Sec.1, Hsin Tai Wu Rd., Hsichih,
Taipei Hsien 221, Taiwan, R.O.C.

Title
BLANK

Size	Document Number	Rev
A3	**Dasher-1**	**SD**

Date: Monday, January 10, 2011 Sheet 16 of 101

B

L

A

N

K

<Core Design>

緯創資通 **Wistron Corporation**
21F, 88, Sec.1, Hsin Tai Wu Rd., Hsichih,
Taipei Hsien 221, Taiwan, R.O.C.

Title
BLANK

Size	Document Number	Rev
A3	**Dasher-1**	**SD**

Date: Monday, January 10, 2011 Sheet 17 of 101

B

L

A

N

K

<Core Design>

緯創資通 **Wistron Corporation**
21F, 88, Sec.1, Hsin Tai Wu Rd., Hsichih,
Taipei Hsien 221, Taiwan, R.O.C.

Title
BLANK

Size	Document Number	Rev
A3	**Dasher-1**	**SD**

Date: Monday, January 10, 2011 Sheet 18 of 101

B

L

A

N

K

<Core Design>

緯創資通 Wistron Corporation
21F, 88, Sec.1, Hsin Tai Wu Rd., Hsichih,
Taipei Hsien 221, Taiwan, R.O.C.

Title
BLANK

Size	Document Number	Rev
A3	Dasher-1	SD

Date: Monday, January 10, 2011 Sheet 19 of 101

B

L

A

N

K

<Core Design>

緯創資通 Wistron Corporation
21F, 88, Sec.1, Hsin Tai Wu Rd., Hsichih,
Taipei Hsien 221, Taiwan, R.O.C.

Title
BLANK

Size	Document Number	Rev
A3	Dasher-1	SD

Date: Monday, January 10, 2011 Sheet 20 of 101

B

L

A

N

K

<Core Design>

緯創資通 Wistron Corporation
21F, 88, Sec.1, Hsin Tai Wu Rd., Hsichih,
Taipei Hsien 221, Taiwan, R.O.C.

Title
BLANK

Size	Document Number	Rev
A3	Dasher-1	SD

Date: Monday, January 10, 2011 Sheet 21 of 101

B

L

A

N

K

<Core Design>

緯創資通 **Wistron Corporation**

21F, 88, Sec.1, Hsin Tai Wu Rd., Hsichih,
Taipei Hsien 221, Taiwan, R.O.C.

Title	***BLANK***	
Size A3	Document Number **Dasher-1**	Rev **SD**
Date: Monday, January 10, 2011	Sheet 22 of 101	

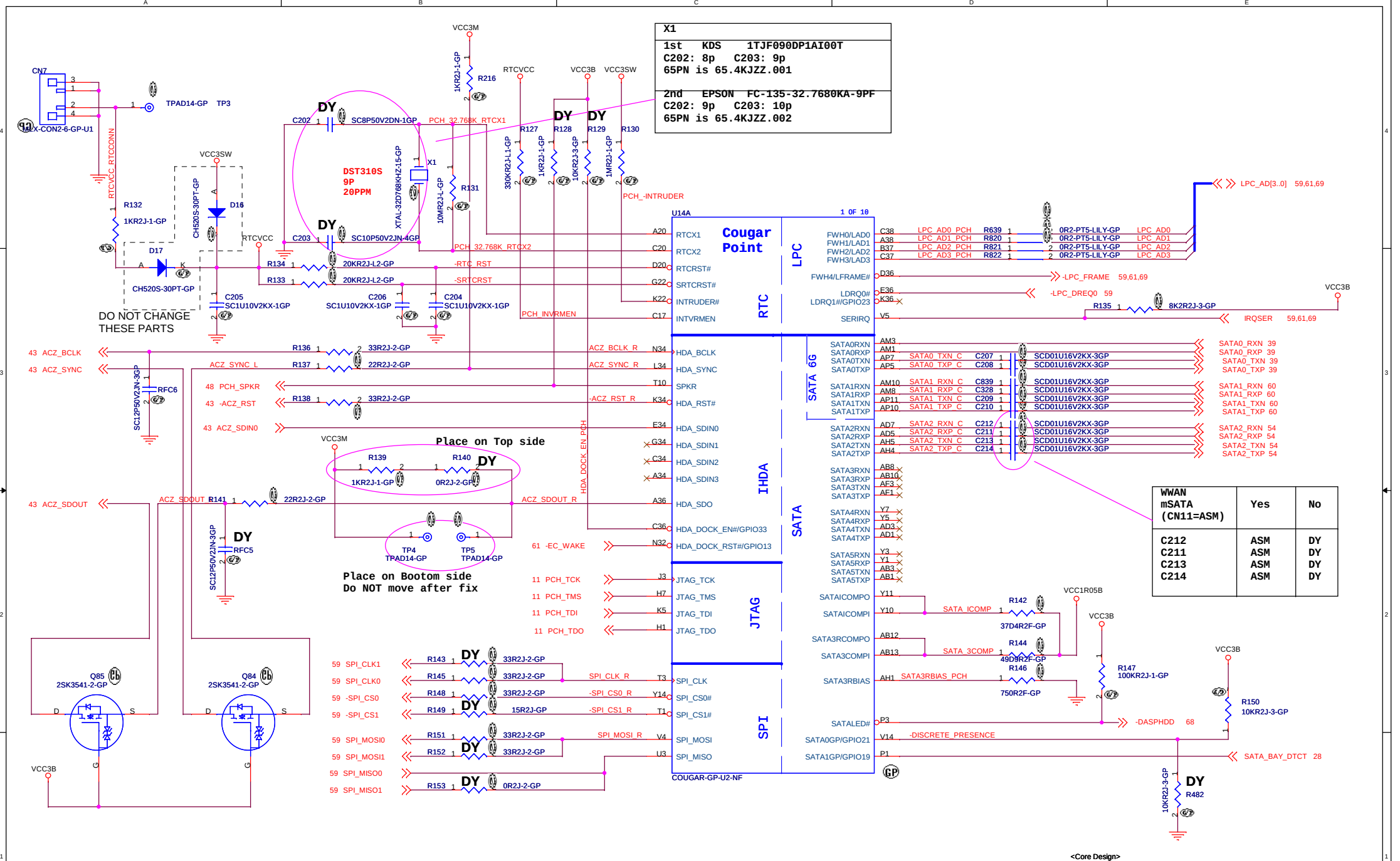
X1
1st KDS 1TJF090DP1AI00T
C202: 8p C203: 9p
65PN is 65.4KJZZ.001
2nd EPSON FC-135-32.7680KA-9PF
C202: 9p C203: 10p
65PN is 65.4KJZZ.002
DST310S
9P
20PPM
DO NOT CHANGE THESE PARTS
Place on Top side
Place on Bootom side
Do NOT move after fix
Cougar Point
U14A
1 OF 10
RTC
LPC
IHDA
SATA 6G
SATA
JTAG
SPI
COUGAR-GP-U2-NF
WWAN mSATA (CN11=ASM)
Yes
No
C212 ASM DY
C211 ASM DY
C213 ASM DY
C214 ASM DY
<Core Design>
Wistron Corporation
21F, 88, Sec.1, Hsin Tai Wu Rd., Hsichih, Taipei Hsien 221, Taiwan, R.O.C.
Title
PCH(1/9):HDA/JTAG/SPI/SATA
Size A3
Document Number
Dasher-1
Rev SD
Date: Tuesday, January 11, 2011
Sheet 23 of 101

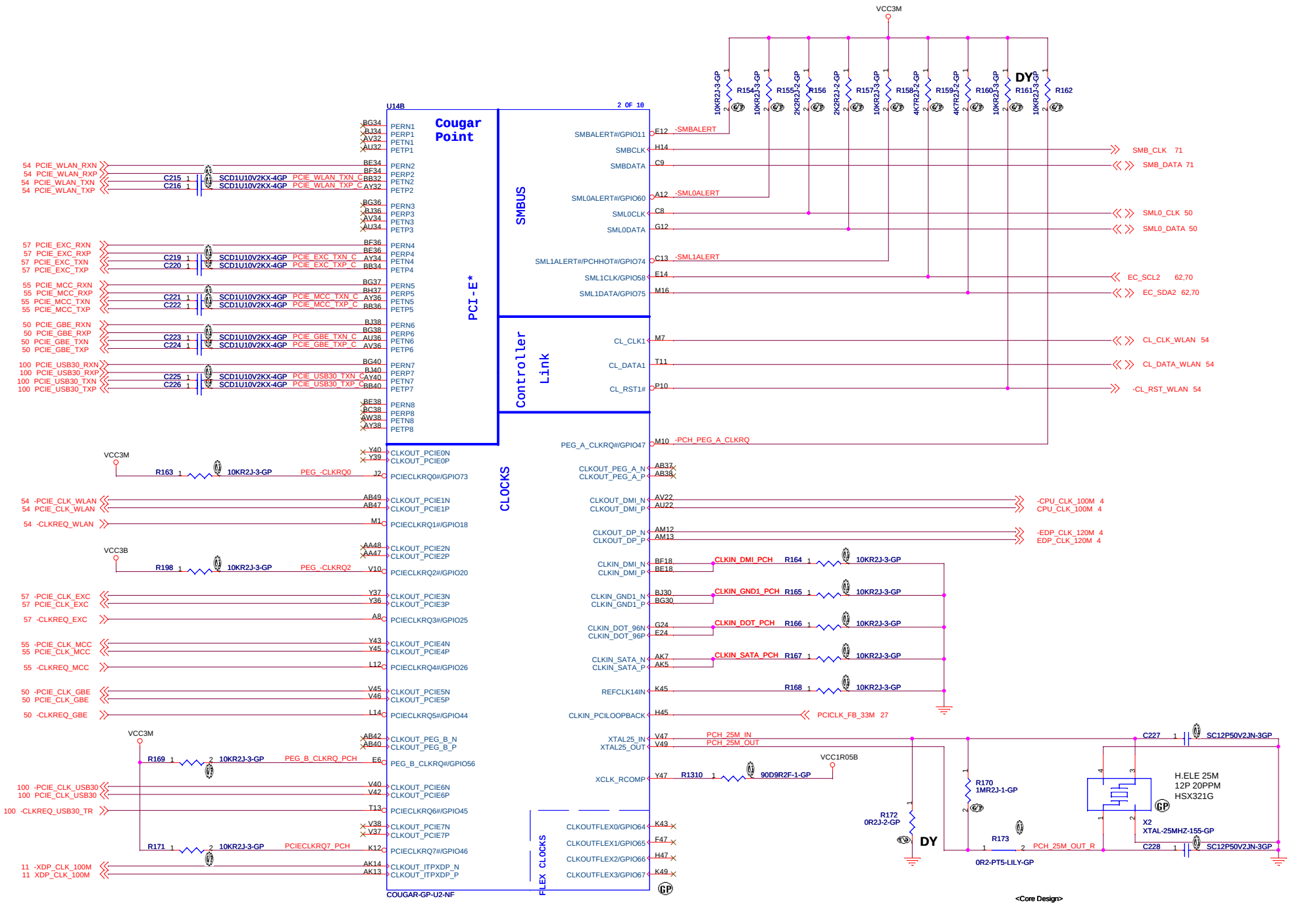

<Core Design>

Wistron Corporation
21F, 88, Sec.1, Hsin Tai Wu Rd., Hsichih,
Taipei Hsien 221, Taiwan, R.O.C.

Title: **PCH(2/9):PCI-E/SMBUS/CLK**

Size	Document Number	Rev
Custom	Dasher-1	SD

Date: Monday, January 10, 2011 Sheet 24 of 101

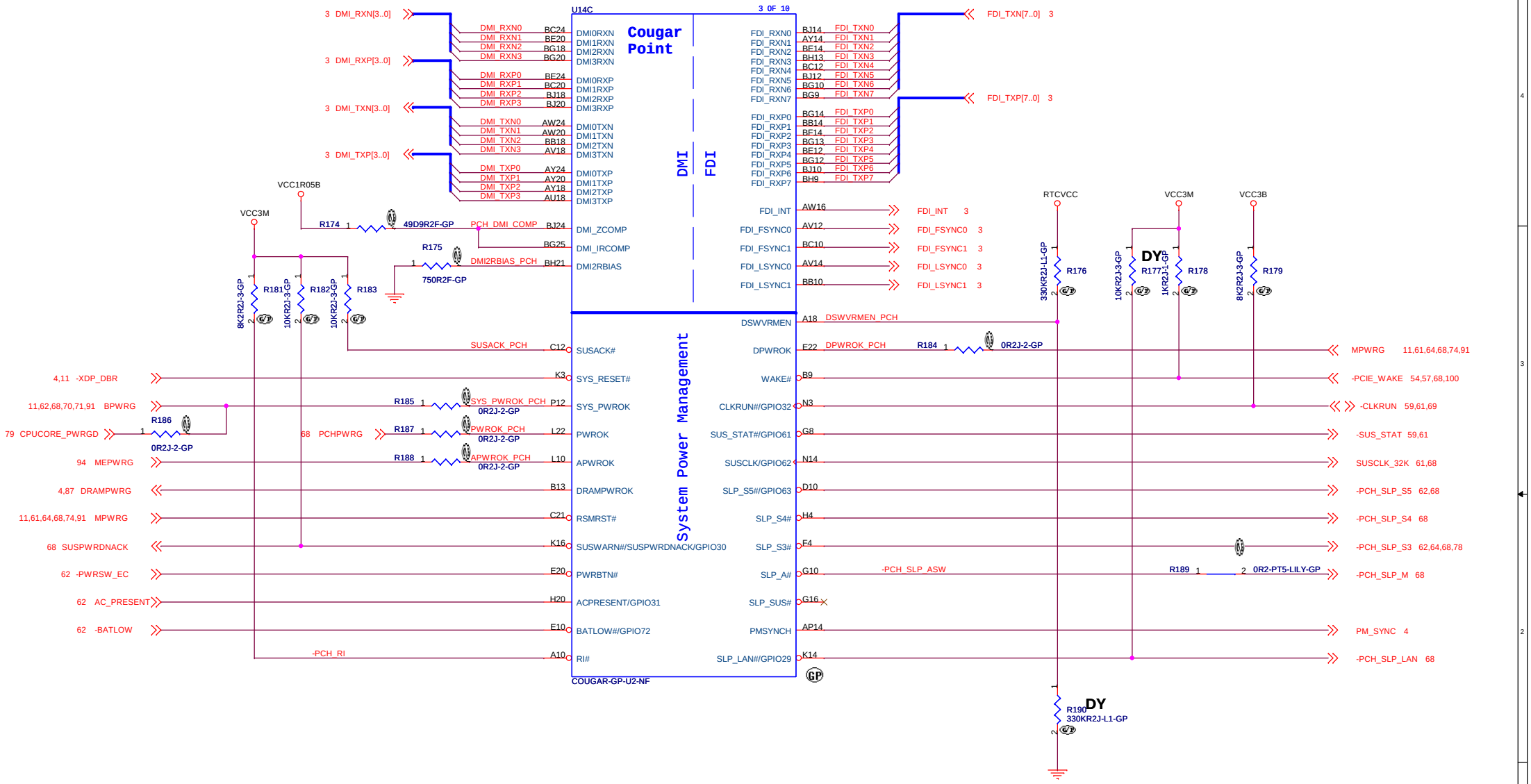

<Core Design>

緯創資通 **Wistron Corporation**
21F, 88, Sec.1, Hsin Tai Wu Rd., Hsichih,
Taipei Hsien 221, Taiwan, R.O.C.

Title	PCH(3/9):DMI/FDI/PM	
Size A3	Document Number Dasher-1	Rev SD
Date: Monday, January 10, 2011	Sheet 25 of 101	

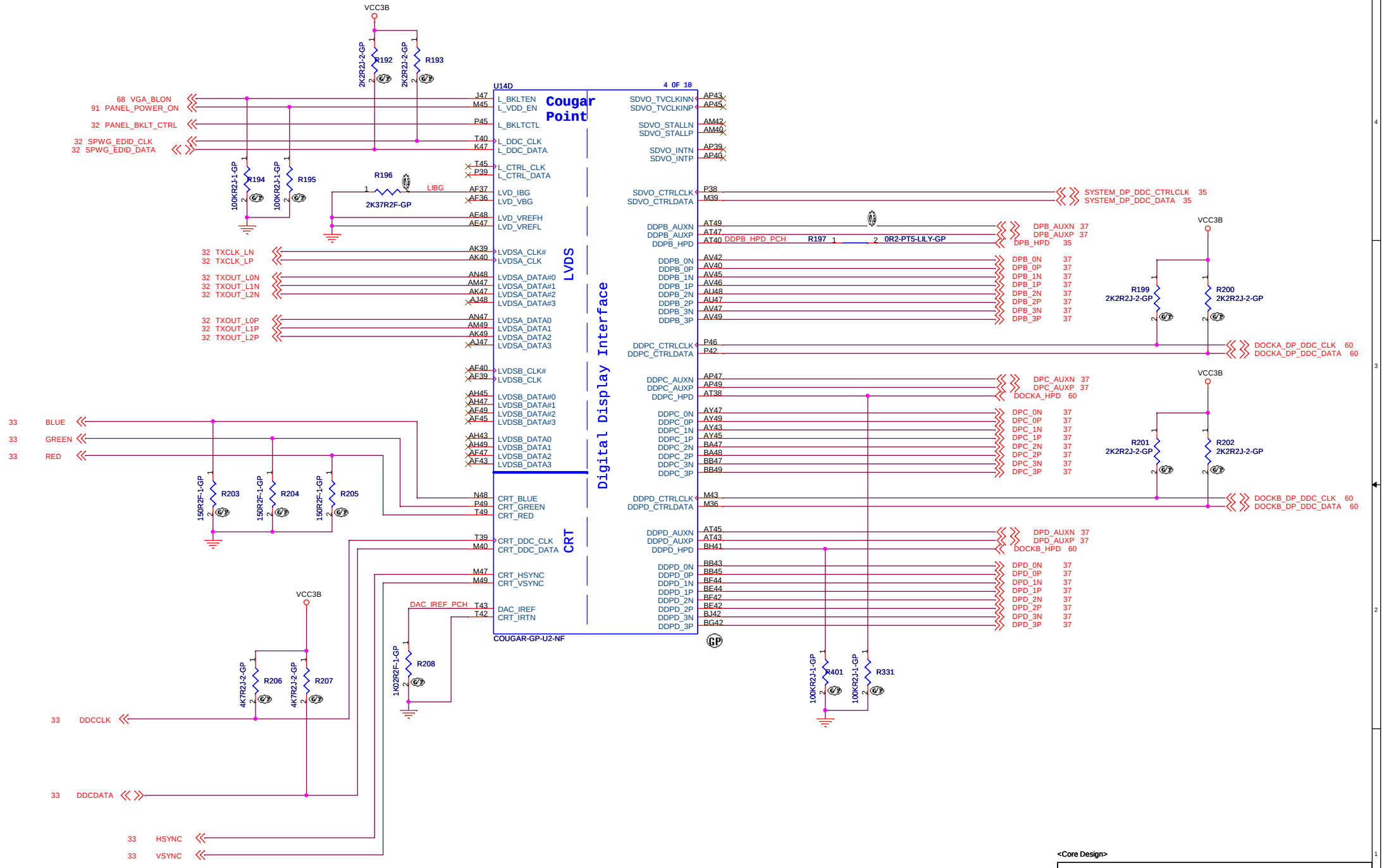

<Core Design>

緯創資通	**Wistron Corporation** 21F, 88, Sec.1, Hsin Tai Wu Rd., Hsichih, Taipei Hsien 221, Taiwan, R.O.C.
Title	**PCH(4/9):LVDS/CRT/DDI**
Size A3	Document Number **Dasher-1** Rev **SD**
Date: Monday, January 10, 2011	Sheet 26 of 101

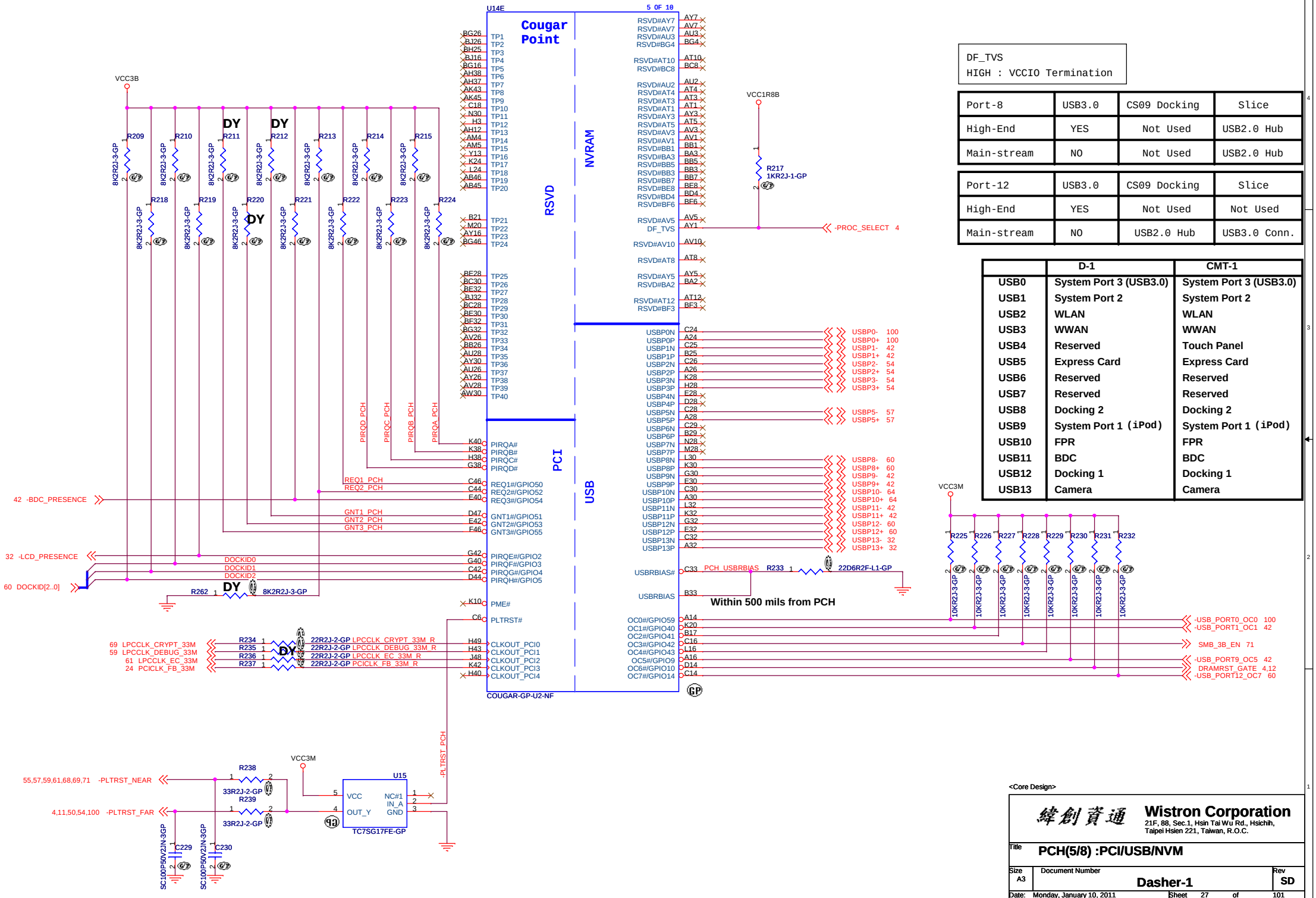

DF_TVS
HIGH : VCCIO Termination

Port-8	USB3.0	CS09 Docking	Slice
High-End	YES	Not Used	USB2.0 Hub
Main-stream	NO	Not Used	USB2.0 Hub

Port-12	USB3.0	CS09 Docking	Slice
High-End	YES	Not Used	Not Used
Main-stream	NO	USB2.0 Hub	USB3.0 Conn.

	D-1	CMT-1
USB0	System Port 3 (USB3.0)	System Port 3 (USB3.0)
USB1	System Port 2	System Port 2
USB2	WLAN	WLAN
USB3	WWAN	WWAN
USB4	Reserved	Touch Panel
USB5	Express Card	Express Card
USB6	Reserved	Reserved
USB7	Reserved	Reserved
USB8	Docking 2	Docking 2
USB9	System Port 1 (iPod)	System Port 1 (iPod)
USB10	FPR	FPR
USB11	BDC	BDC
USB12	Docking 1	Docking 1
USB13	Camera	Camera

<Core Design>

緯創資通 **Wistron Corporation**
21F, 88, Sec.1, Hsin Tai Wu Rd., Hsichih,
Taipei Hsien 221, Taiwan, R.O.C.

Title: **PCH(5/8) :PCI/USB/NVM**

Size: A3 | Document Number: **Dasher-1** | Rev: SD

Date: Monday, January 10, 2011 | Sheet 27 of 101

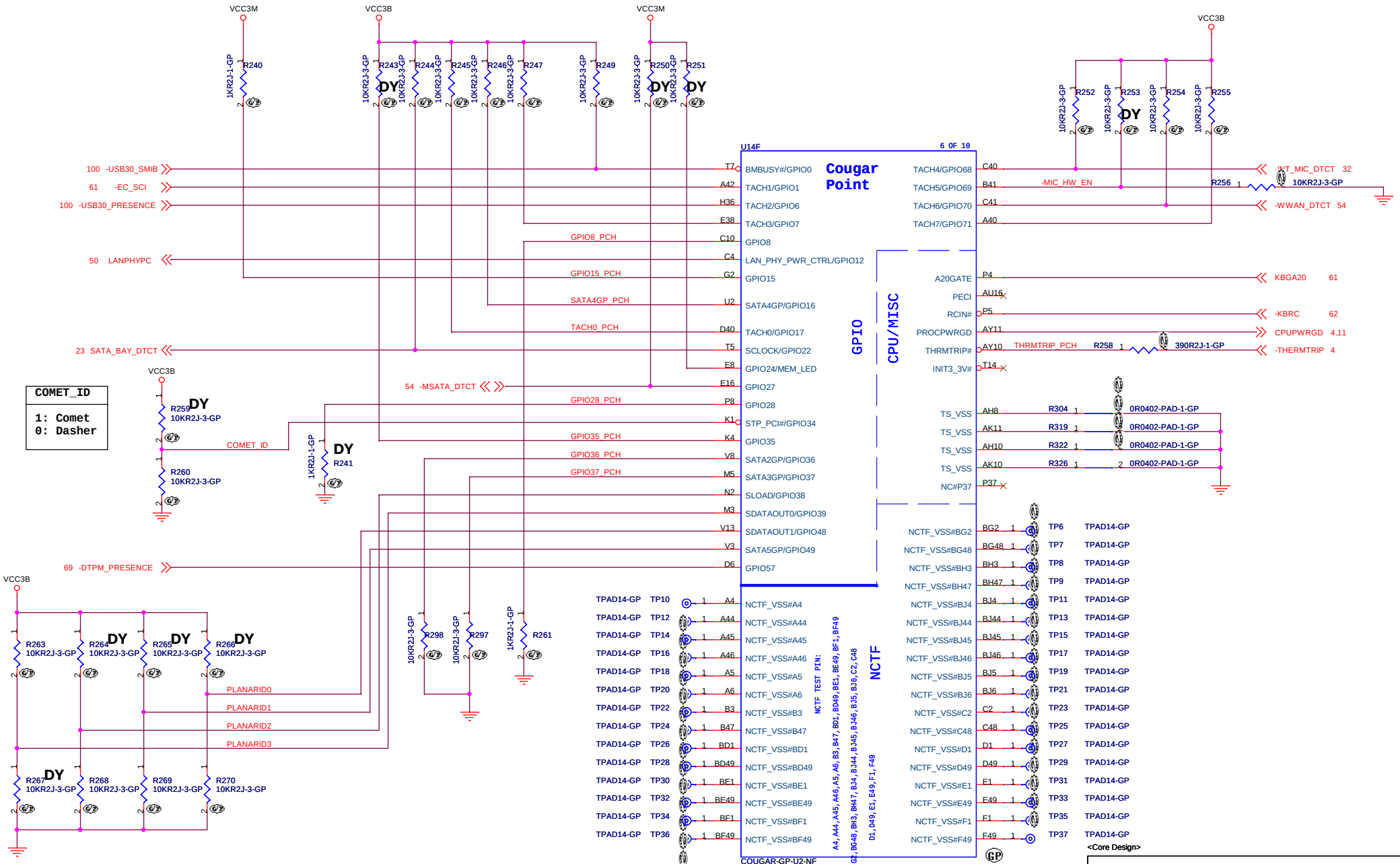

Wistron Corporation
21F, 88, Sec.1, Hsin Tai Wu Rd., Hsichih, Taipei Hsien 221, Taiwan, R.O.C.

Title: PCH(6/9):GPIO/NCTF/RSVD

Size: A3 | Document Number: Darsher-1 | Rev: SD

Date: Monday, January 10, 2011 | Sheet 28 of 101

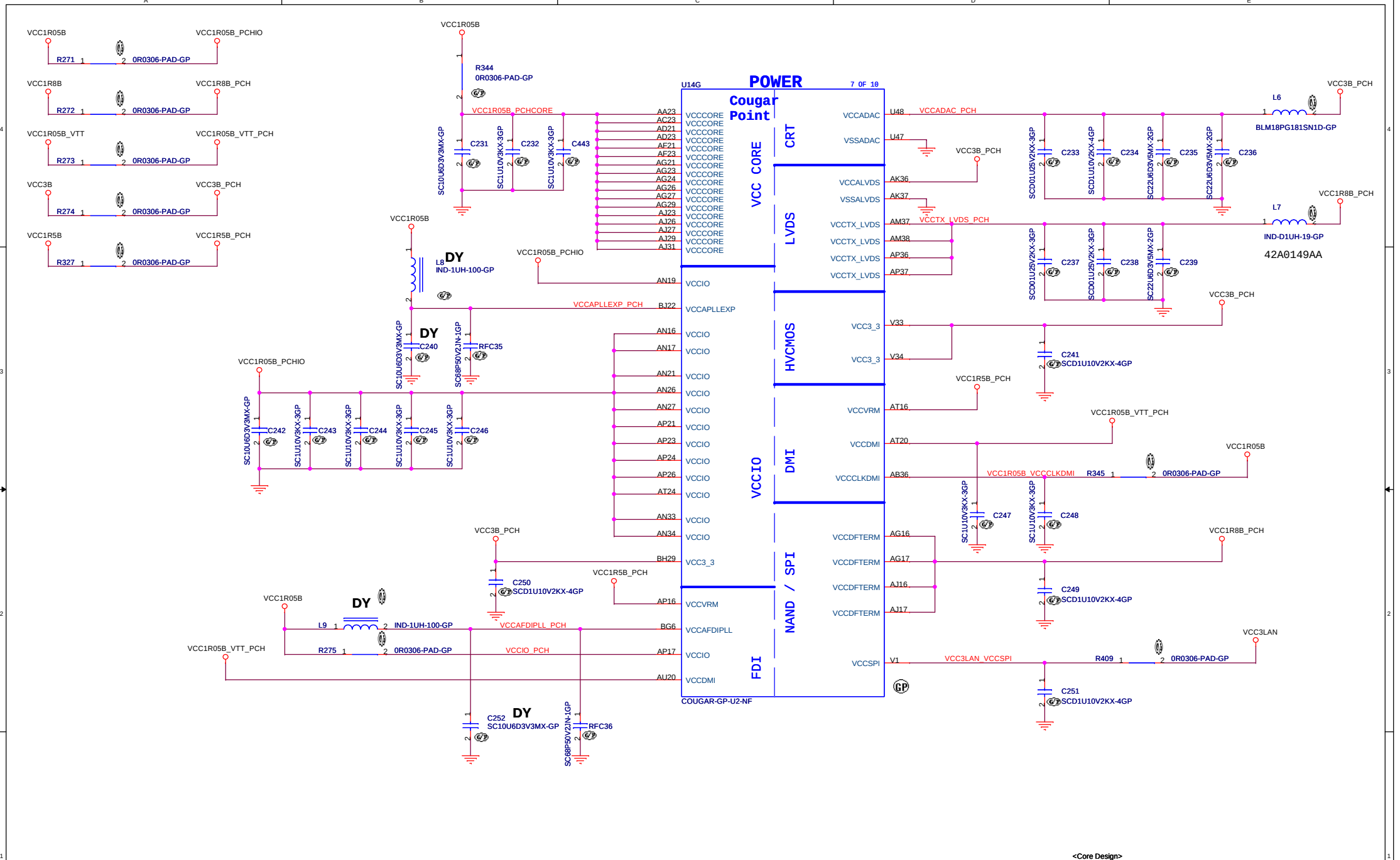

<Core Design>

緯創資通	Wistron Corporation 21F, 88, Sec.1, Hsin Tai Wu Rd., Hsichih, Taipei Hsien 221, Taiwan, R.O.C.	
Title	PCH(7/9):Power	
Size A3	Document Number Dasher-1	Rev SD
Date: Monday, January 10, 2011	Sheet 29 of 101	

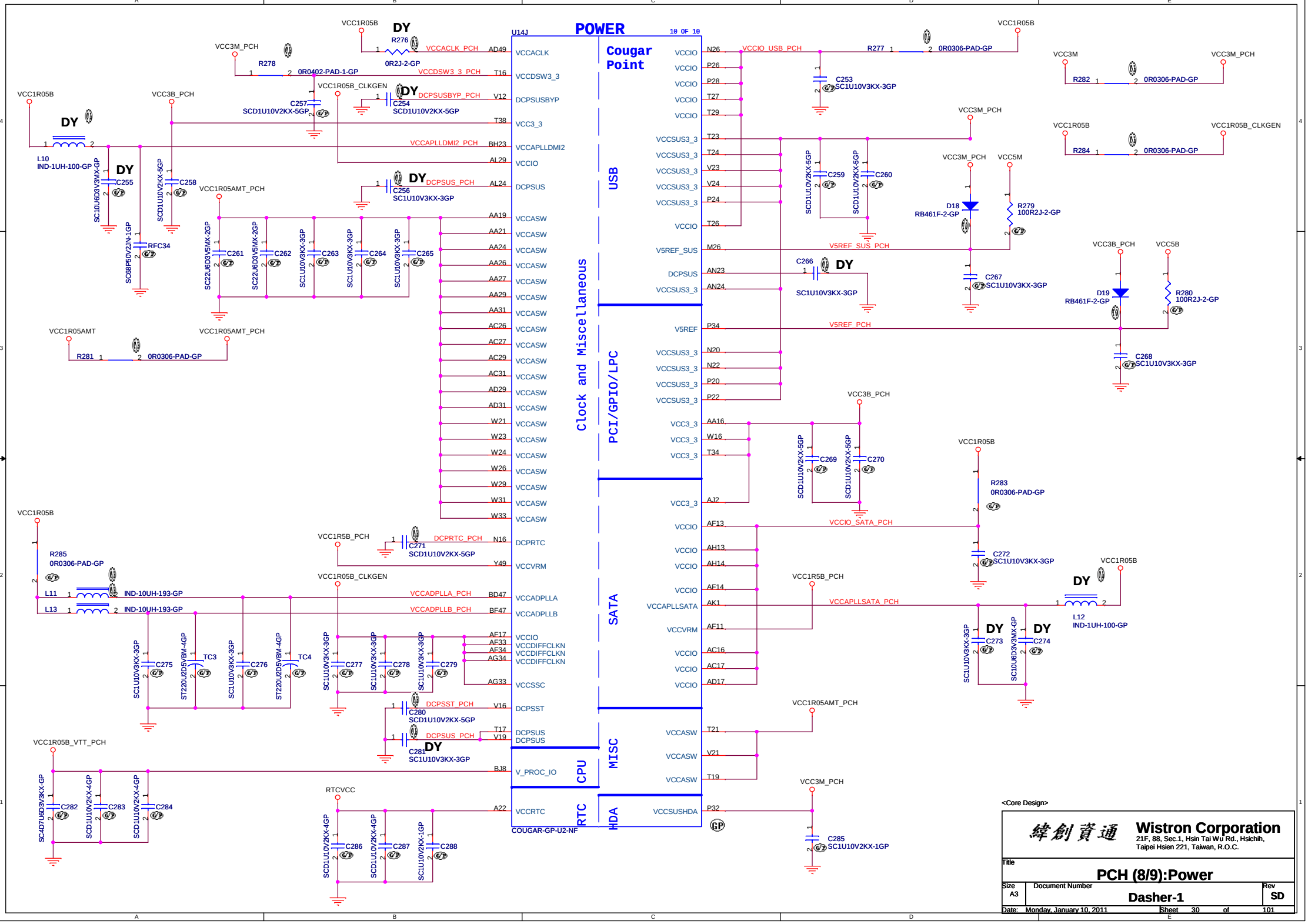

<Core Design>

Wistron Corporation
21F, 88, Sec.1, Hsin Tai Wu Rd., Hsichih,
Taipei Hsien 221, Taiwan, R.O.C.

Title: PCH (8/9):Power

Size: A3 | Document Number: Dasher-1 | Rev: SD

Date: Monday, January 10, 2011 | Sheet 30 of 101

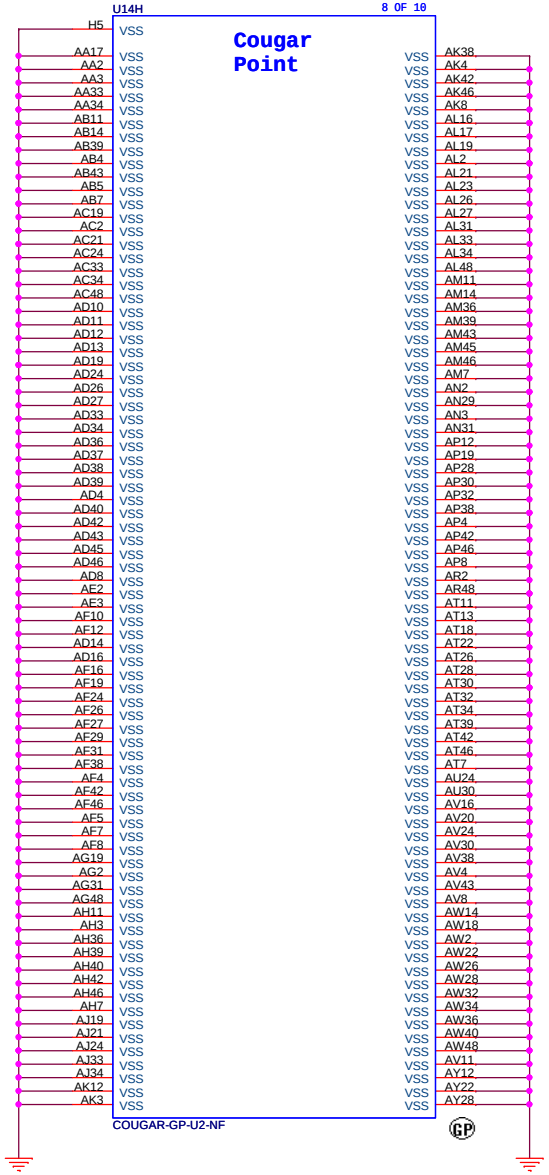

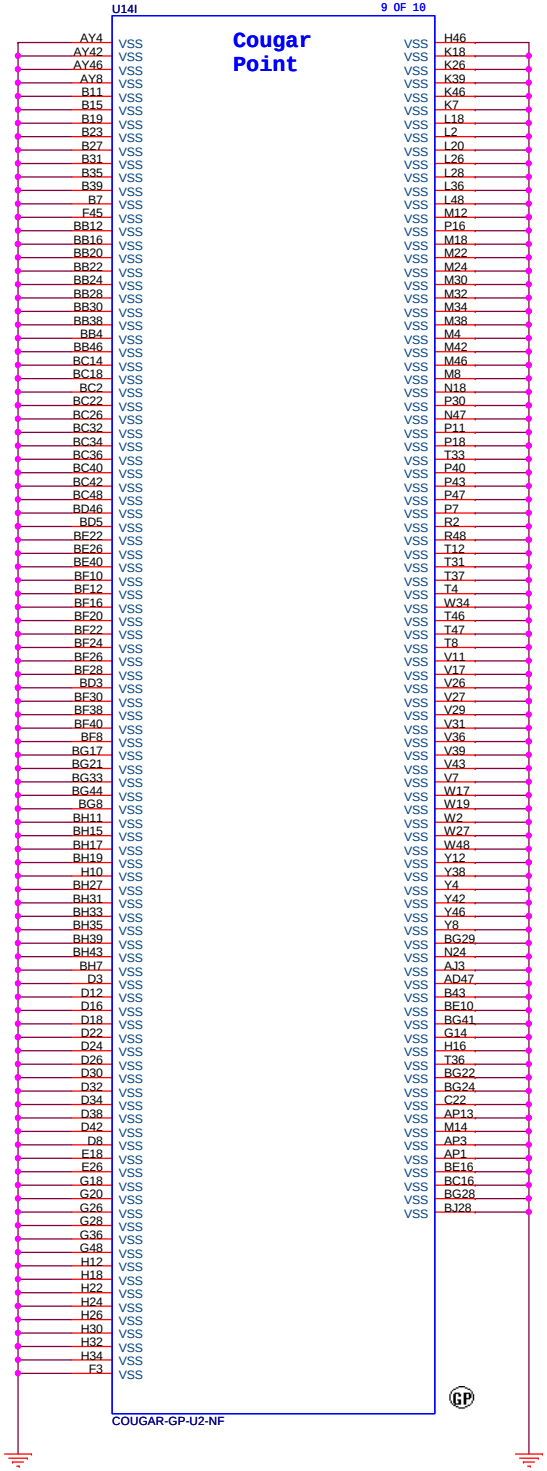

<Core Design>

緯創資通	**Wistron Corporation** 21F, 88, Sec.1, Hsin Tai Wu Rd., Hsichih, Taipei Hsien 221, Taiwan, R.O.C.	
Title	**PCH (9/9):GND**	
Size A3	Document Number **Dasher-1**	Rev **SD**
Date: Monday, January 10, 2011	Sheet 31 of 101	

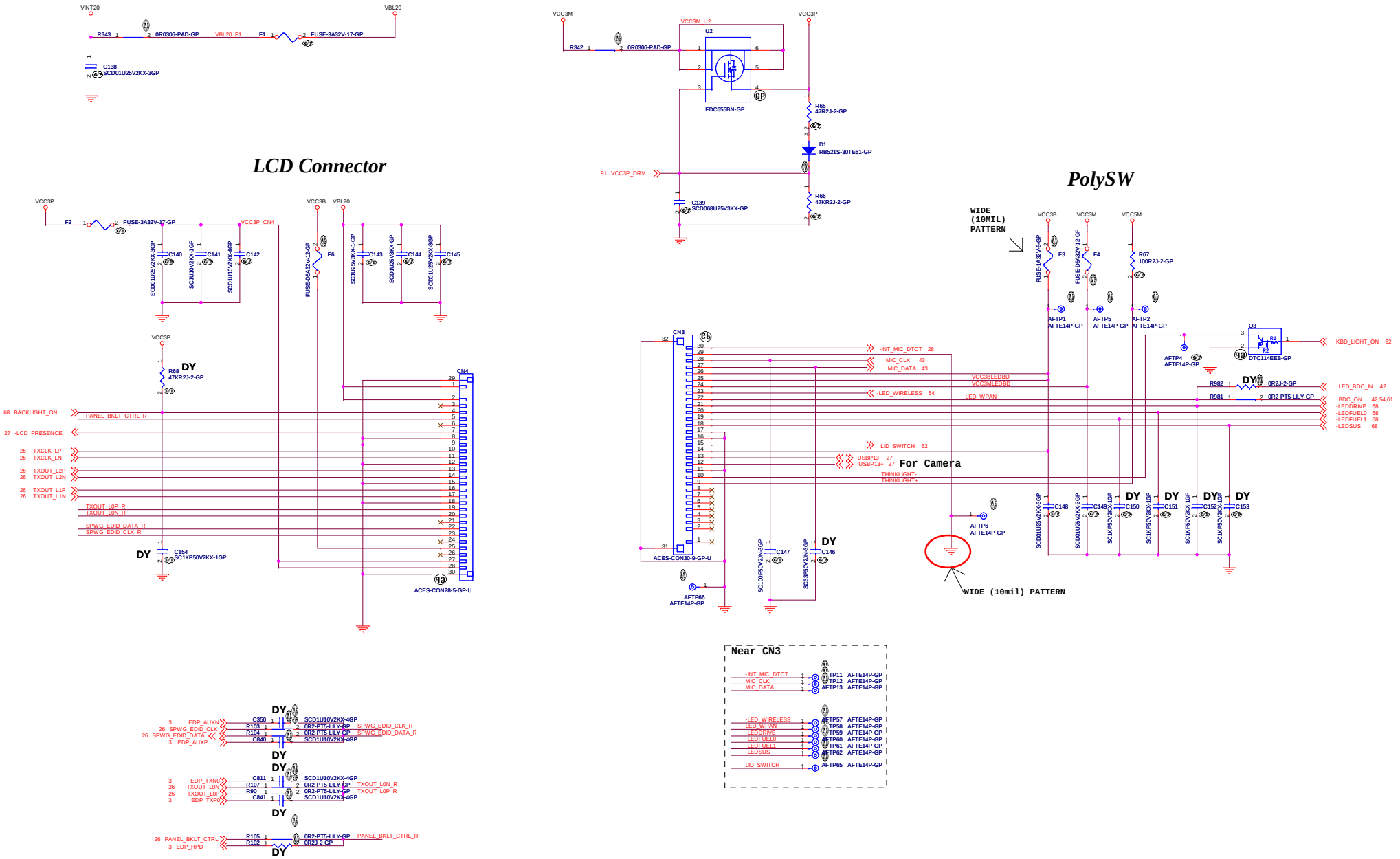

<Core Design>

緯創資通	Wistron Corporation 21F, 88, Sec.1, Hsin Tai Wu Rd., Hsichih, Taipei Hsien 221, Taiwan, R.O.C.	
Title	LCD CONNECTOR	
Size A2	Document Number Dasher-1	Rev SD
Date: Monday, January 10, 2011	Sheet 32 of 101	

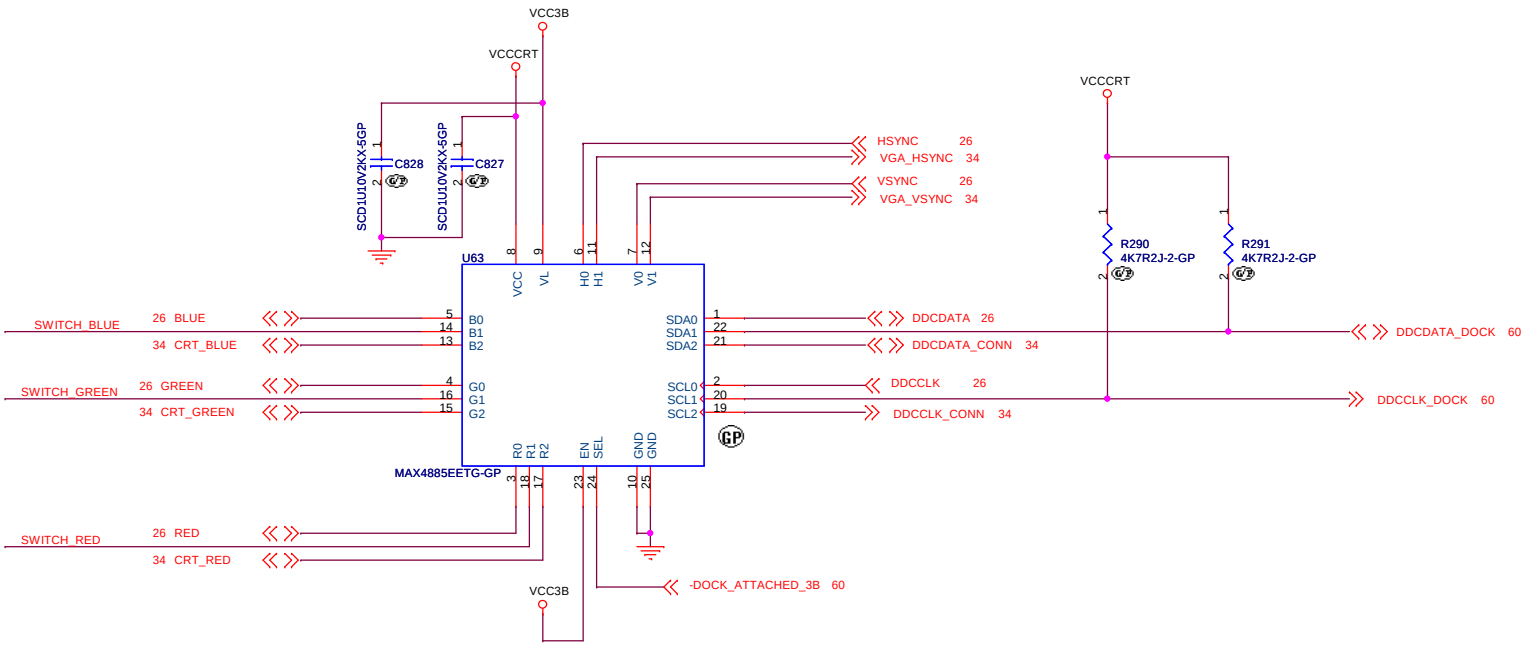

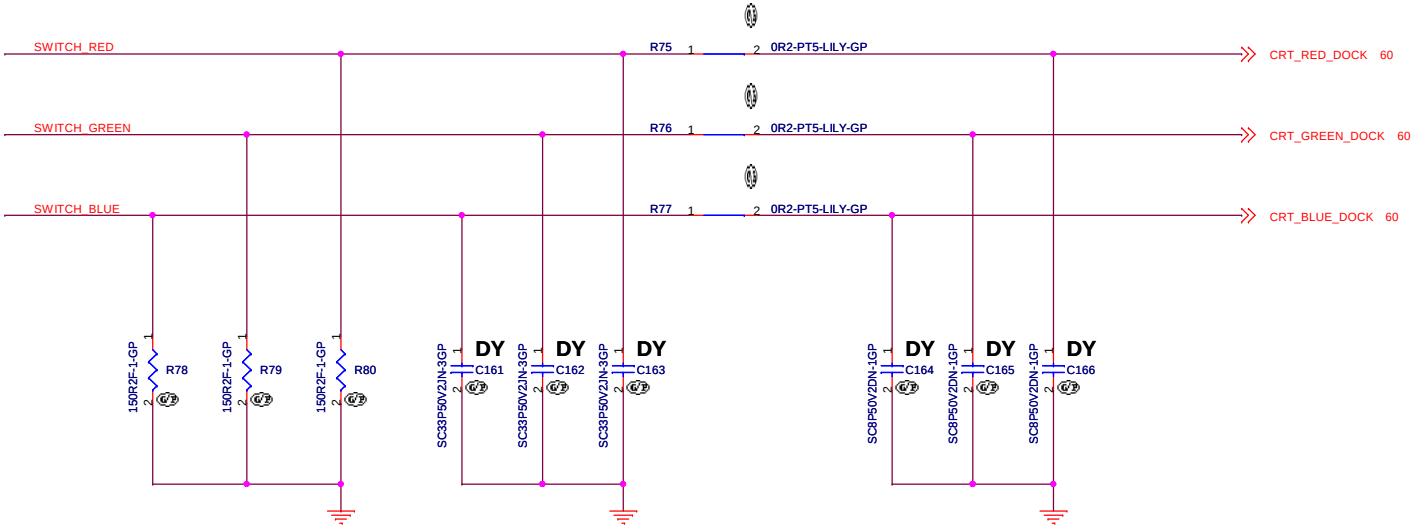

<Core Design>

緯創資通 Wistron Corporation
21F, 88, Sec.1, Hsin Tai Wu Rd., Hsichih,
Taipei Hsien 221, Taiwan, R.O.C.

Title: **CRT SELECTOR**

Size	Document Number	Rev
A3	Dasher-1	SD

Date: Monday, January 10, 2011 Sheet 33 of 101

GND GUARDING
EACH SIGNAL WIDTH DEPENDS ON ZO(TRACE IMPEDANCE)
SPACING=20MIL

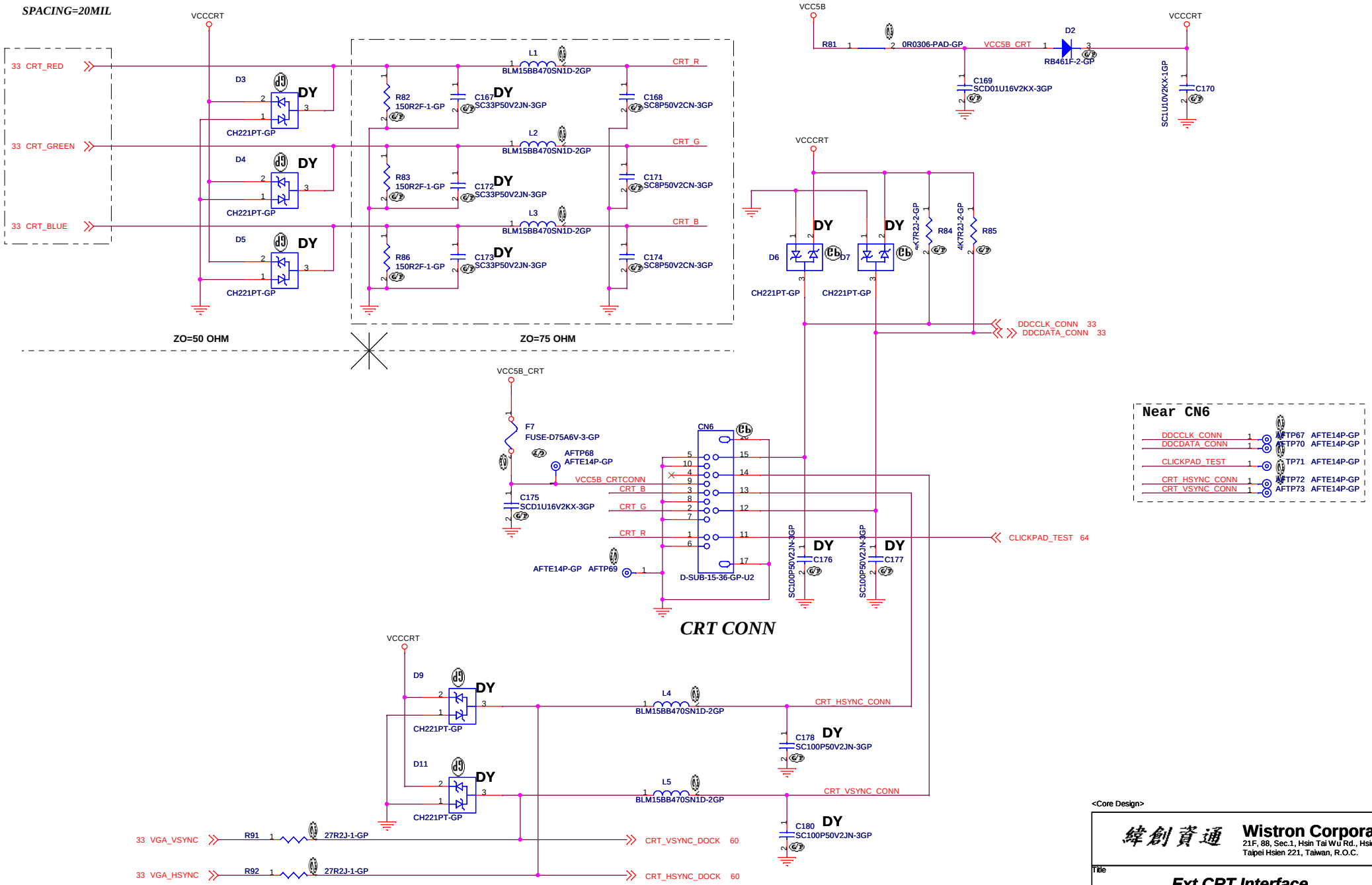

<Core Design>

Wistron Corporation
21F, 88, Sec.1, Hsin Tai Wu Rd., Hsichih,
Taipei Hsien 221, Taiwan, R.O.C.

Title: **Ext CRT Interface**

Size	Document Number	Rev
A3	Dasher-1	SD

Date: Monday, January 10, 2011 Sheet 34 of 101

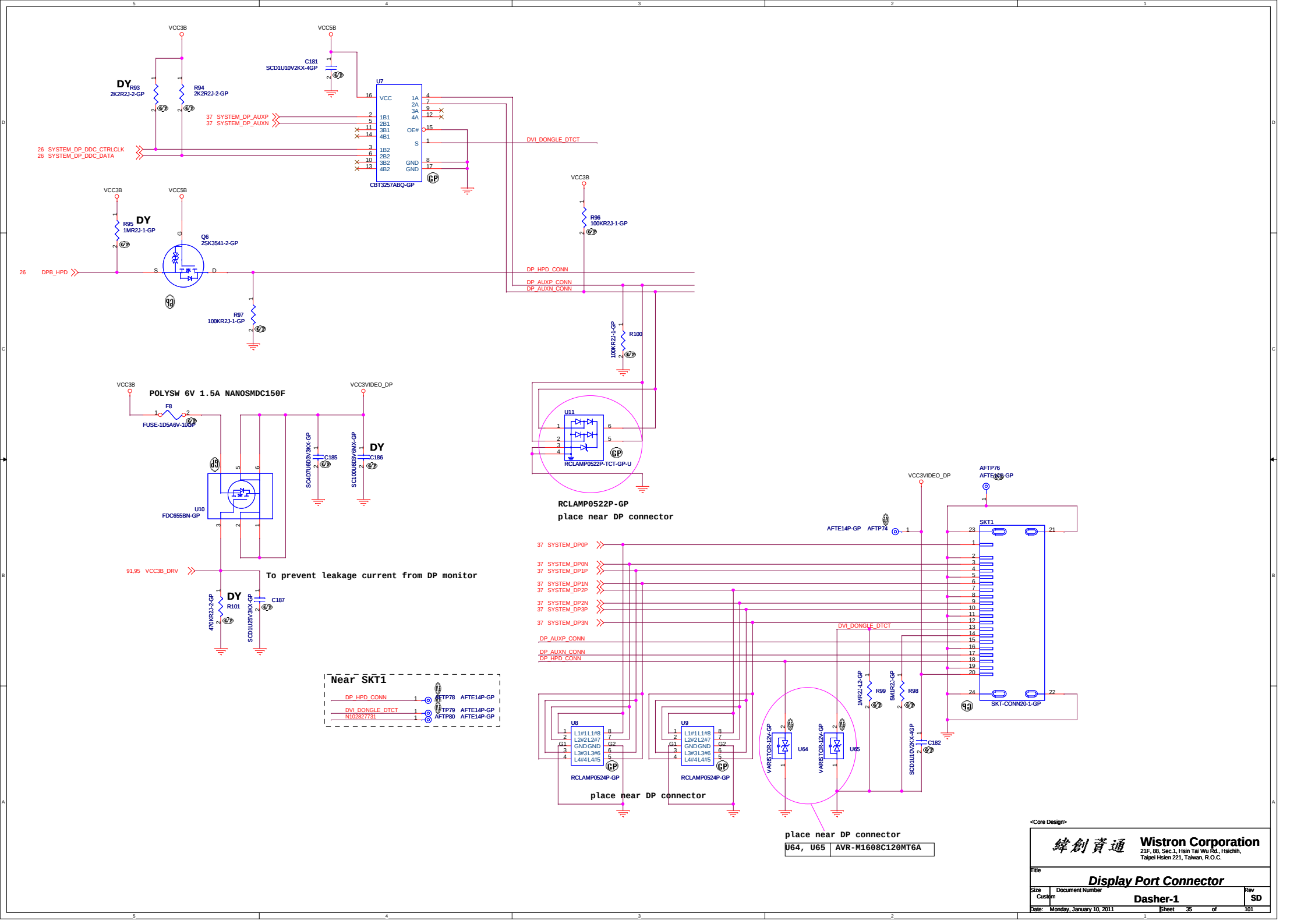
VCC3B
VCC5B
C181
SCD1U10V2KX-4GP
DY
R93
2K2R2J-2-GP
R94
2K2R2J-2-GP
U7
VCC
1A
2A
3A
4A
1B1
2B1
3B1
4B1
OE#
S
1B2
2B2
3B2
4B2
GND
GND
CBT3257ABQ-GP
37 SYSTEM_DP_AUXP
37 SYSTEM_DP_AUXN
26 SYSTEM_DP_DDC_CTRLCLK
26 SYSTEM_DP_DDC_DATA
DVI_DONGLE_DTCT
R95
1MR2J-1-GP
Q6
2SK3541-2-GP
26 DPB_HPD
R97
100KR2J-1-GP
R96
100KR2J-1-GP
DP_HPD_CONN
DP_AUXP_CONN
DP_AUXN_CONN
R100
100KR2J-1-GP
U11
RCLAMP0522P-TCT-GP-U
RCLAMP0522P-GP
place near DP connector
POLYSW 6V 1.5A NANOSMDC150F
F8
FUSE-1D5A6V-10GP
VCC3VIDEO_DP
U10
FDC655BN-GP
SC4D7U6D3V3KX-GP
C185
SC10U6D3V6MX-GP
C186
91,95 VCC3B_DRV
To prevent leakage current from DP monitor
R101
470KR2J-2-GP
C187
SC31U25V3KX-GP
Near SKT1
DP_HPD_CONN
DVI_DONGLE_DTCT
N102827731
AFTP78
AFTP79
AFTP80
AFTE14P-GP
AFTP76
AFTP74
SKT1
SKT-CONN20-1-GP
37 SYSTEM_DP0P
37 SYSTEM_DP0N
37 SYSTEM_DP1P
37 SYSTEM_DP1N
37 SYSTEM_DP2P
37 SYSTEM_DP2N
37 SYSTEM_DP3P
37 SYSTEM_DP3N
DP_AUXP_CONN
DP_AUXN_CONN
DP_HPD_CONN
DVI_DONGLE_DTCT
U8
U9
RCLAMP0524P-GP
place near DP connector
R99
1MR2J-1-2-GP
R98
5MR2J-GP
VARISTOR-12V-GP
U64
U65
C182
SCD1U10V2KX-4GP
place near DP connector
U64, U65 AVR-M1608C120MT6A
<Core Design>
緯創資通
Wistron Corporation
21F, 88, Sec.1, Hsin Tai Wu Rd., Hsichih,
Taipei Hsien 221, Taiwan, R.O.C.
Title
Display Port Connector
Size Custom
Document Number Dasher-1
Rev SD
Date: Monday, January 10, 2011
Sheet 35 of 101

B

L

A

N

K

<Core Design>

緯創資通 Wistron Corporation
21F, 88, Sec.1, Hsin Tai Wu Rd., Hsichih,
Taipei Hsien 221, Taiwan, R.O.C.

Title
BLANK

Size	Document Number	Rev
A3	Dasher-1	SD

Date: Monday, January 10, 2011 Sheet 36 of 101

System DP Connector

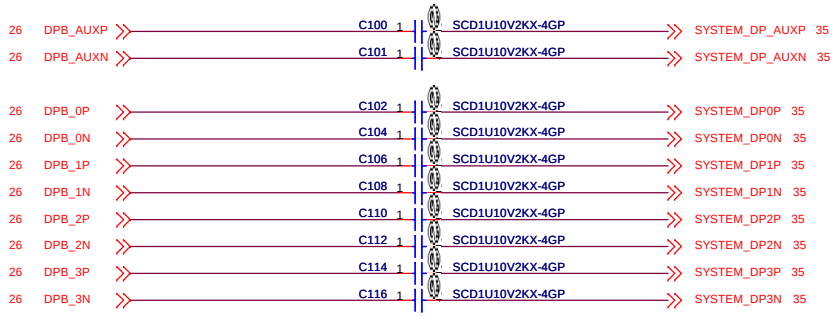

Docking DP Connector A

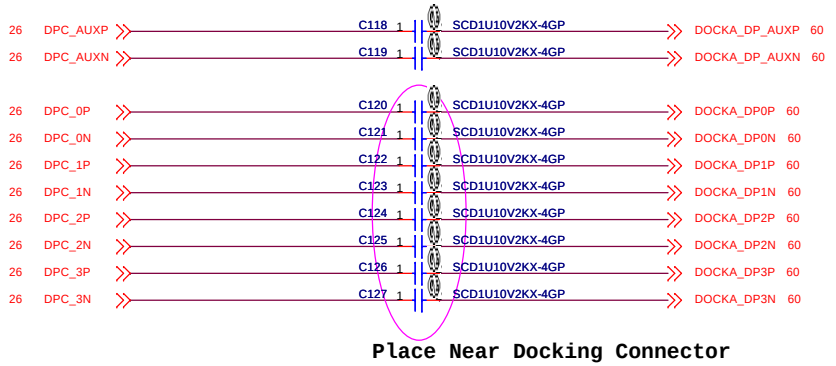

Docking DP Connector B

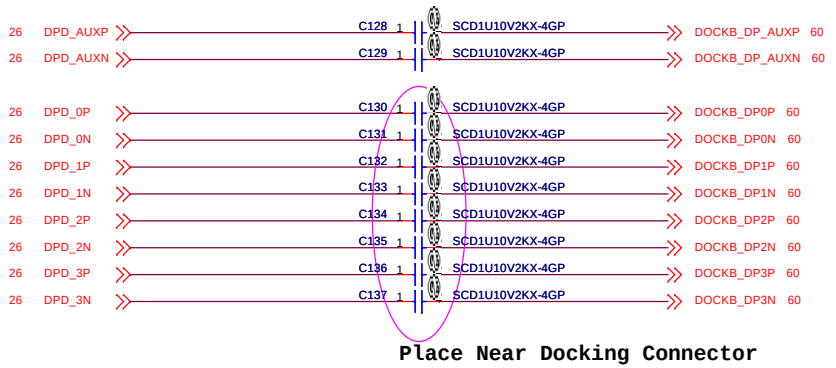

<Core Design>

緯創資通 **Wistron Corporation**
21F, 88, Sec.1, Hsin Tai Wu Rd., Hsichih,
Taipei Hsien 221, Taiwan, R.O.C.

Title	Display Port AC Coupling	
Size A3	Document Number Dasher-1	Rev SD
Date: Monday, January 10, 2011	Sheet 37 of 101	

B

L

A

N

K

<Core Design>

緯創資通 **Wistron Corporation**
21F, 88, Sec.1, Hsin Tai Wu Rd., Hsichih,
Taipei Hsien 221, Taiwan, R.O.C.

Title: ***BLANK***

Size	Document Number	Rev
A3	**Dasher-1**	**SD**

Date: Monday, January 10, 2011 Sheet 38 of 101

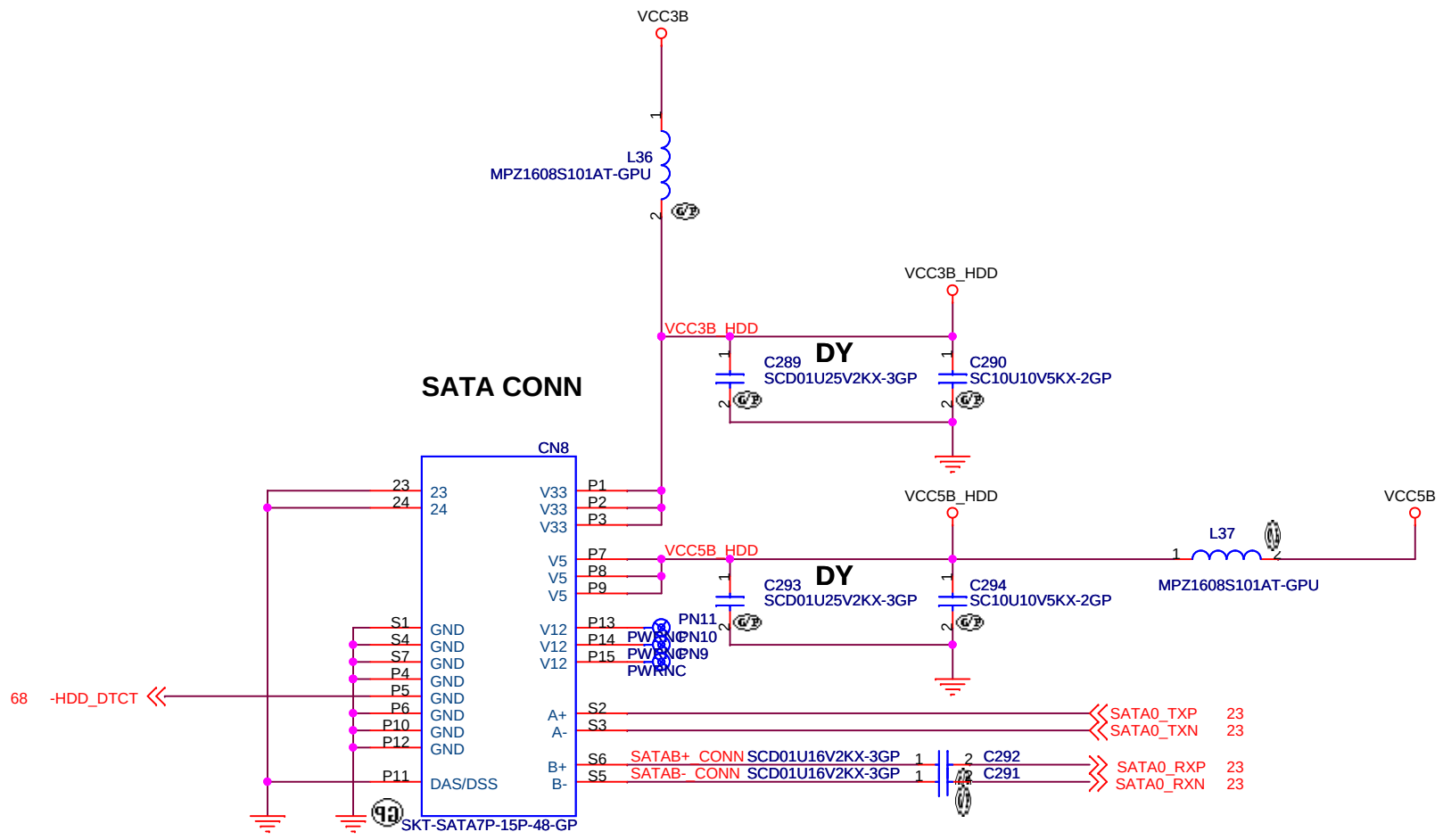

<Core Design>

緯創資通 **Wistron Corporation**
21F, 88, Sec.1, Hsin Tai Wu Rd., Hsichih,
Taipei Hsien 221, Taiwan, R.O.C.

Title: ***SATA Connector***

Size	Document Number	Rev
A4	**Dasher-1**	**SD**

Date: Monday, January 10, 2011 Sheet 39 of 101

B

L

A

N

K

<Core Design>

緯創資通 **Wistron Corporation**
21F, 88, Sec.1, Hsin Tai Wu Rd., Hsichih,
Taipei Hsien 221, Taiwan, R.O.C.

Title
BLANK

Size	Document Number	Rev
A3	**Dasher-1**	**SD**

Date: Monday, January 10, 2011 Sheet 40 of 101

B

L

A

N

K

<Core Design>

緯創資通 Wistron Corporation
21F, 88, Sec.1, Hsin Tai Wu Rd., Hsichih,
Taipei Hsien 221, Taiwan, R.O.C.

Title
BLANK

Size	Document Number	Rev
A3	Dasher-1	SD

U18	Vendor	Vendor P/N
1st	TI	TPS2065DGN
2nd	Rohm	BD8012FVJ

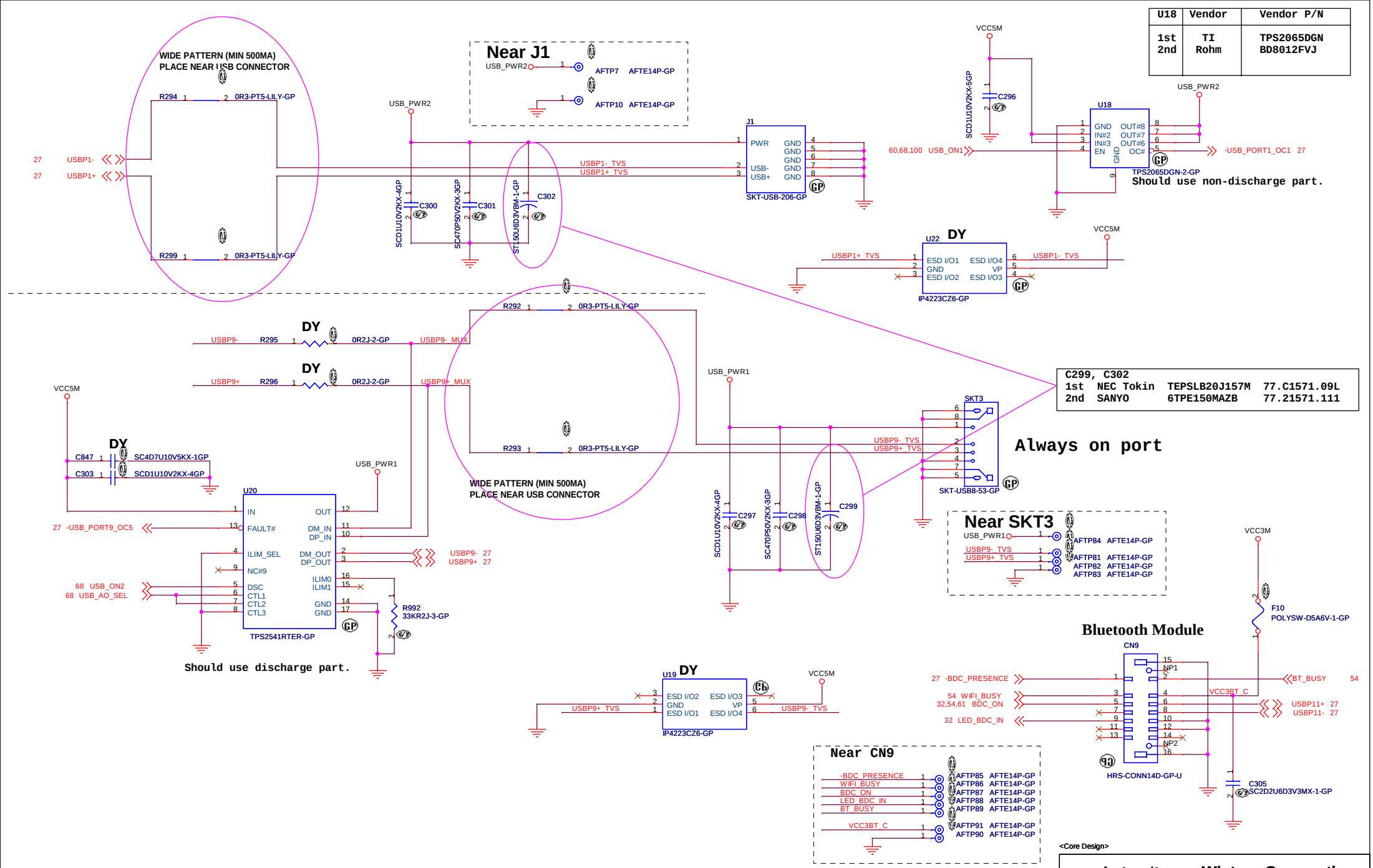

<Core Design>

緯創資通 **Wistron Corporation**
21F, 88, Sec.1, Hsin Tai Wu Rd., Hsichih,
Taipei Hsien 221, Taiwan, R.O.C.

Title: ***USB Connector***

Size: A3 | Document Number: **Dasher-1** | Rev: SD

Date: Monday, January 10, 2011 | Sheet 42 of 101

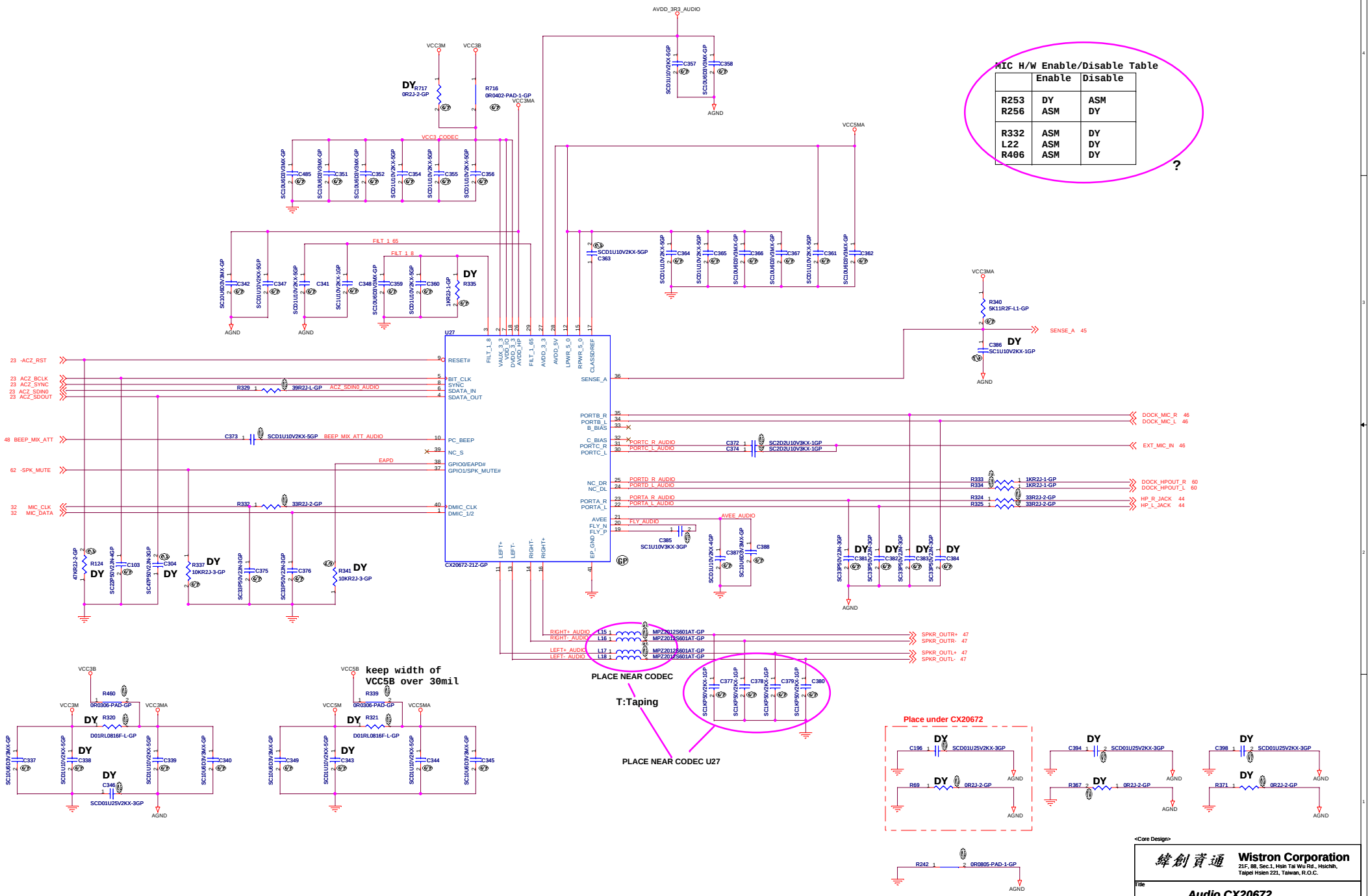
MIC H/W Enable/Disable Table
Enable
Disable
R253 DY ASM
R256 ASM DY
R332 ASM DY
L22 ASM DY
R406 ASM DY
?
U27
CX20672-21Z-GP
RESET#
BIT_CLK
SYNC
SDATA_IN
SDATA_OUT
PC_BEEP
NC_S
GPIO0/EAPD#
GPIO1/SPK_MUTE#
DMIC_CLK
DMIC_1/2
SENSE_A
PORTB_R
PORTB_L
B_BIAS
C_BIAS
PORTC_R
PORTC_L
NC_DR
NC_DL
PORTA_R
PORTA_L
AVEE
FLY_N
FLY_P
EP_GND
FILT_1_8
VAUX_3_3
VDD_IO
DVDD_3_3
AVDD_HP
FILT_1_65
AVDD_3_3
AVDD_5V
LPWR_5_0
RPWR_5_0
CLASSD/REF
LEFT+
LEFT-
RIGHT-
RIGHT+
-ACZ_RST
ACZ_BCLK
ACZ_SYNC
ACZ_SDIN0
ACZ_SDOUT
BEEP_MIX_ATT
-SPK_MUTE
MIC_CLK
MIC_DATA
ACZ_SDIN0_AUDIO
BEEP_MIX_ATT_AUDIO
EAPD
PORTC_R_AUDIO
PORTC_L_AUDIO
PORTD_R_AUDIO
PORTD_L_AUDIO
PORTA_R_AUDIO
PORTA_L_AUDIO
FLY_AUDIO
AVEE_AUDIO
RIGHT+_AUDIO
RIGHT-_AUDIO
LEFT+_AUDIO
LEFT-_AUDIO
SENSE_A
DOCK_MIC_R
DOCK_MIC_L
EXT_MIC_IN
DOCK_HPOUT_R
DOCK_HPOUT_L
HP_R_JACK
HP_L_JACK
SPKR_OUTR+
SPKR_OUTR-
SPKR_OUTL+
SPKR_OUTL-
AVDD_3R3_AUDIO
VCC3M
VCC3B
VCC3MA
VCC3_CODEC
VCC5MA
VCC5M
VCC5B
AGND
R717 0R2J-2-GP
R716 0R0402-PAD-1-GP
R329 39R2J-L-GP
R332 33R2J-2-GP
R333 1KR2J-1-GP
R334 1KR2J-1-GP
R324 33R2J-2-GP
R325 33R2J-2-GP
R335 1KR2J-1-GP
R340 5K11R2F-L1-GP
C386 SC1U10V2KX-1GP
C373 SCD1U10V2KX-5GP
C372 SC2D2U10V3KX-1GP
C374 SC2D2U10V3KX-1GP
C385 SC1U10V3KX-3GP
C363 SCD1U10V2KX-5GP
R124 47KR2J-2-GP
R337 10KR2J-3-GP
R341 10KR2J-3-GP
L15 MPZ2012S601AT-GP
L16 MPZ2012S601AT-GP
L17 MPZ2012S601AT-GP
L18 MPZ2012S601AT-GP
PLACE NEAR CODEC
T:Taping
PLACE NEAR CODEC U27
keep width of VCC5B over 30mil
R460 0R0306-PAD-GP
R320 D01RL0816F-L-GP
R339 0R0306-PAD-GP
R321 D01RL0816F-L-GP
C346 SCD01U25V2KX-3GP
Place under CX20672
C196 SCD01U25V2KX-3GP
R69 0R2J-2-GP
C394 SCD01U25V2KX-3GP
R367 0R2J-2-GP
C398 SCD01U25V2KX-3GP
R371 0R2J-2-GP
R242 0R0805-PAD-1-GP
DY
<Core Design>
Wistron Corporation
21F, 88, Sec.1, Hsin Tai Wu Rd., Hsichih, Taipei Hsien 221, Taiwan, R.O.C.
Title
Audio CX20672
Size A2
Document Number Dasher-1
Rev SD
Date: Monday, January 10, 2011
Sheet 43 of 101

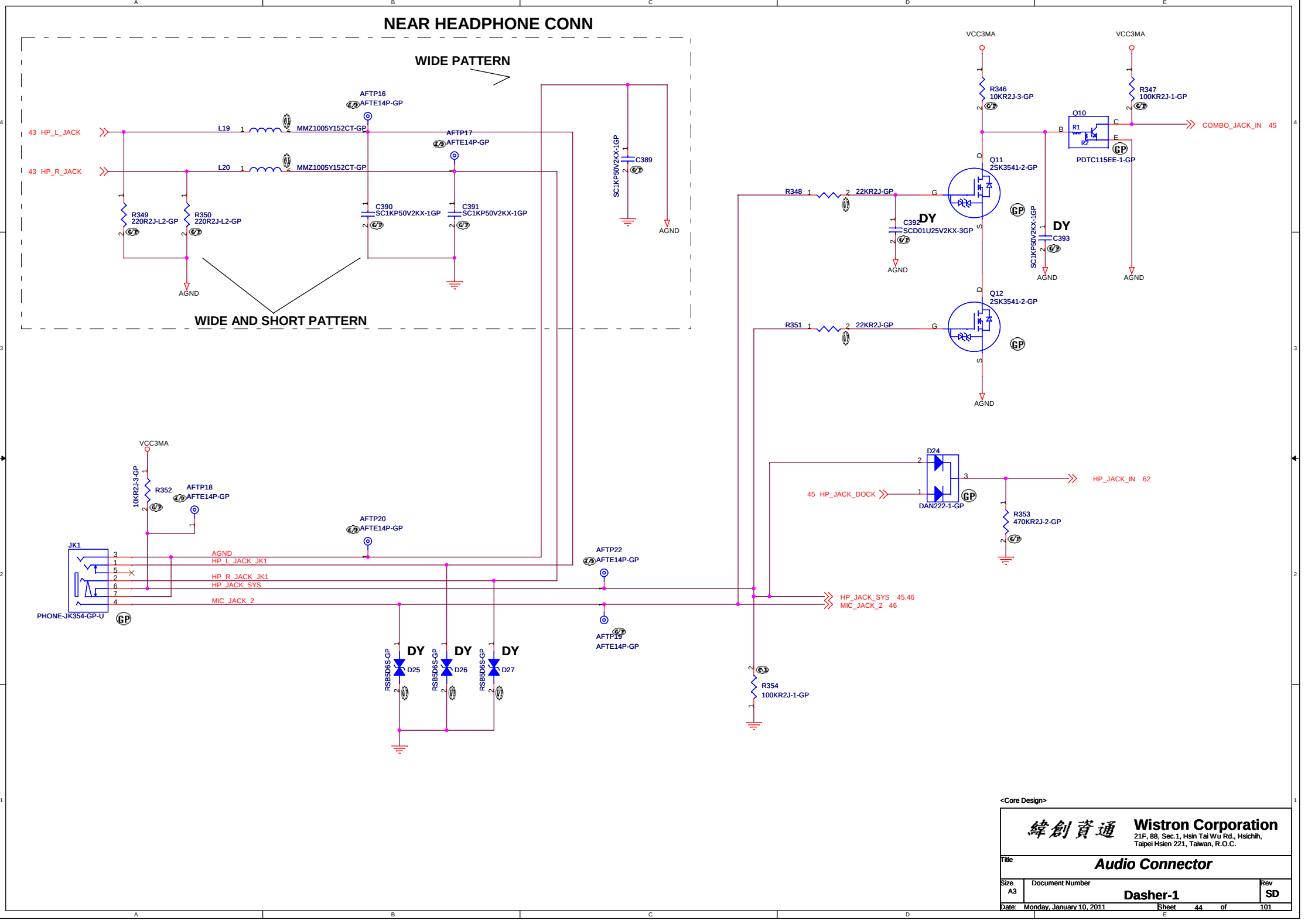
NEAR HEADPHONE CONN
WIDE PATTERN
WIDE AND SHORT PATTERN
43 HP_L_JACK
43 HP_R_JACK
L19
L20
MMZ1005Y152CT-GP
AFTP16
AFTE14P-GP
AFTP17
AFTE14P-GP
R349
220R2J-L2-GP
R350
220R2J-L2-GP
C390
SC1KP50V2KX-1GP
C391
SC1KP50V2KX-1GP
C389
SC1KP50V2KX-1GP
AGND
VCC3MA
R346
10KR2J-3-GP
R347
100KR2J-1-GP
Q10
PDTC115EE-1-GP
COMBO_JACK_IN 45
Q11
2SK3541-2-GP
Q12
2SK3541-2-GP
R348
22KR2J-GP
R351
22KR2J-GP
C392
SCD01U25V2KX-3GP
DY
C393
SC1KP50V2KX-1GP
D24
DAN222-1-GP
45 HP_JACK_DOCK
HP_JACK_IN 62
R353
470KR2J-2-GP
R352
10KR2J-3-GP
AFTP18
AFTE14P-GP
AFTP20
AFTE14P-GP
AFTP22
AFTE14P-GP
AFTP19
AFTE14P-GP
JK1
PHONE-JK354-GP-U
AGND
HP_L_JACK_JK1
HP_R_JACK_JK1
HP_JACK_SYS
MIC_JACK_2
HP_JACK_SYS 45,46
MIC_JACK_2 46
RSB506S-GP
D25
D26
D27
R354
100KR2J-1-GP
<Core Design>
緯創資通
Wistron Corporation
21F, 88, Sec.1, Hsin Tai Wu Rd., Hsichih,
Taipei Hsien 221, Taiwan, R.O.C.
Title
Audio Connector
Size
A3
Document Number
Dasher-1
Rev
SD
Date: Monday, January 10, 2011
Sheet 44 of 101

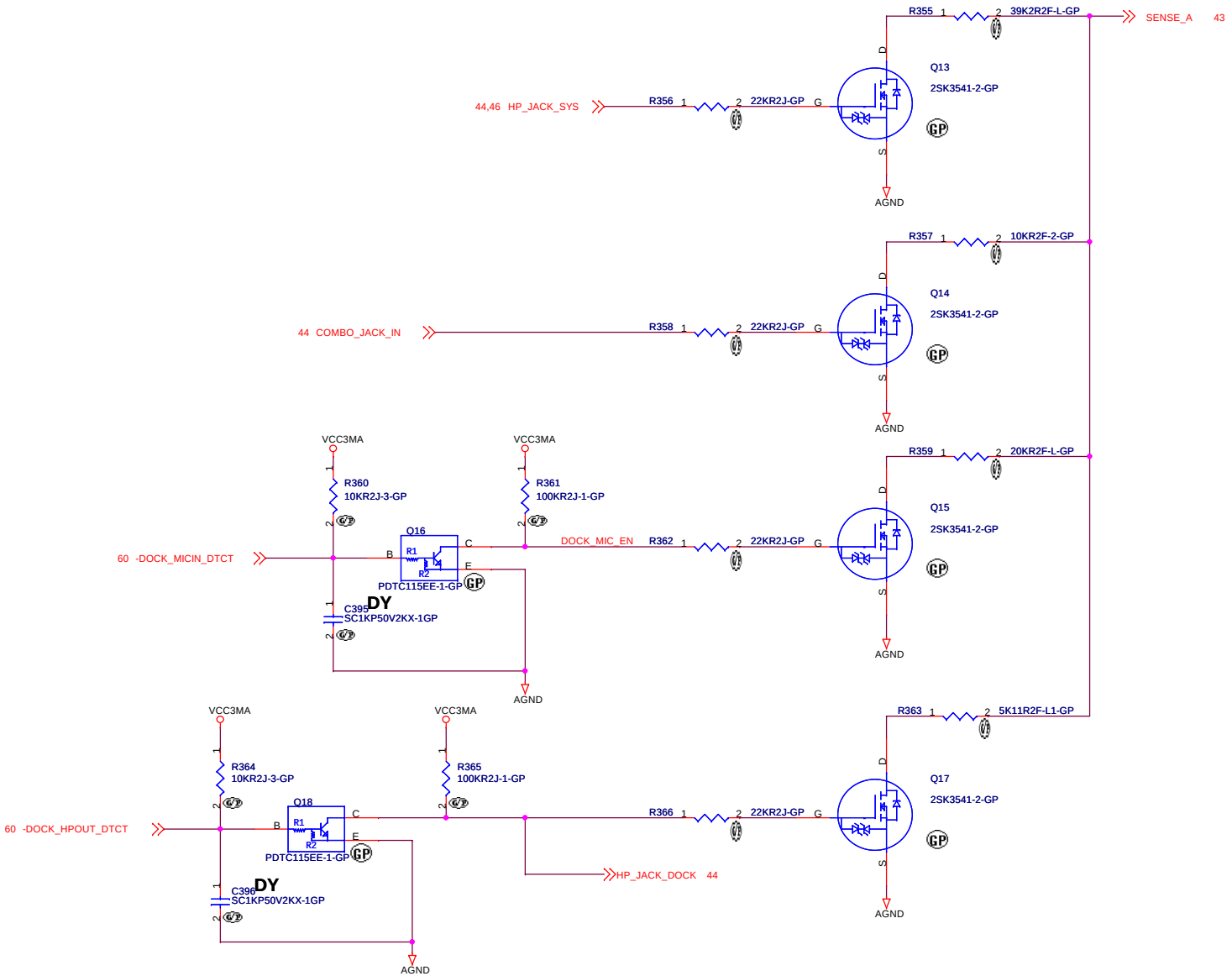

<Core Design>

緯創資通 **Wistron Corporation**
21F, 88, Sec.1, Hsin Tai Wu Rd., Hsichih,
Taipei Hsien 221, Taiwan, R.O.C.

Title: ***Audio Jack Sense***

Size	Document Number	Rev
A3	Dasher-1	SD

Date: Monday, January 10, 2011 Sheet 45 of 101

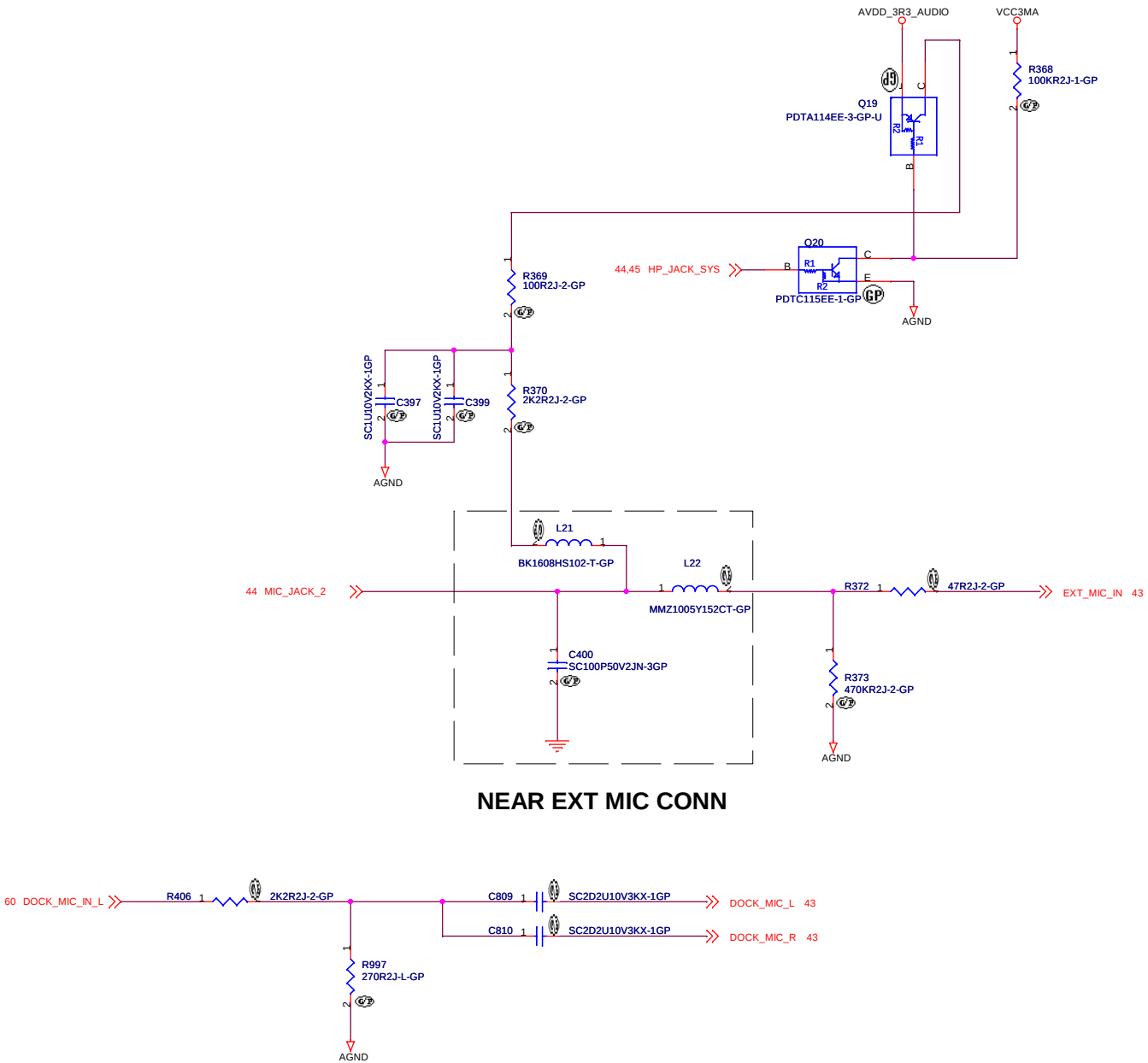

<Core Design>

緯創資通 **Wistron Corporation**
21F, 88, Sec.1, Hsin Tai Wu Rd., Hsichih,
Taipei Hsien 221, Taiwan, R.O.C.

Title: ***Audio Ext MIC I/F***

Size	Document Number	Rev
A3	Dasher-1	SD

Date: Monday, January 10, 2011 Sheet 46 of 101

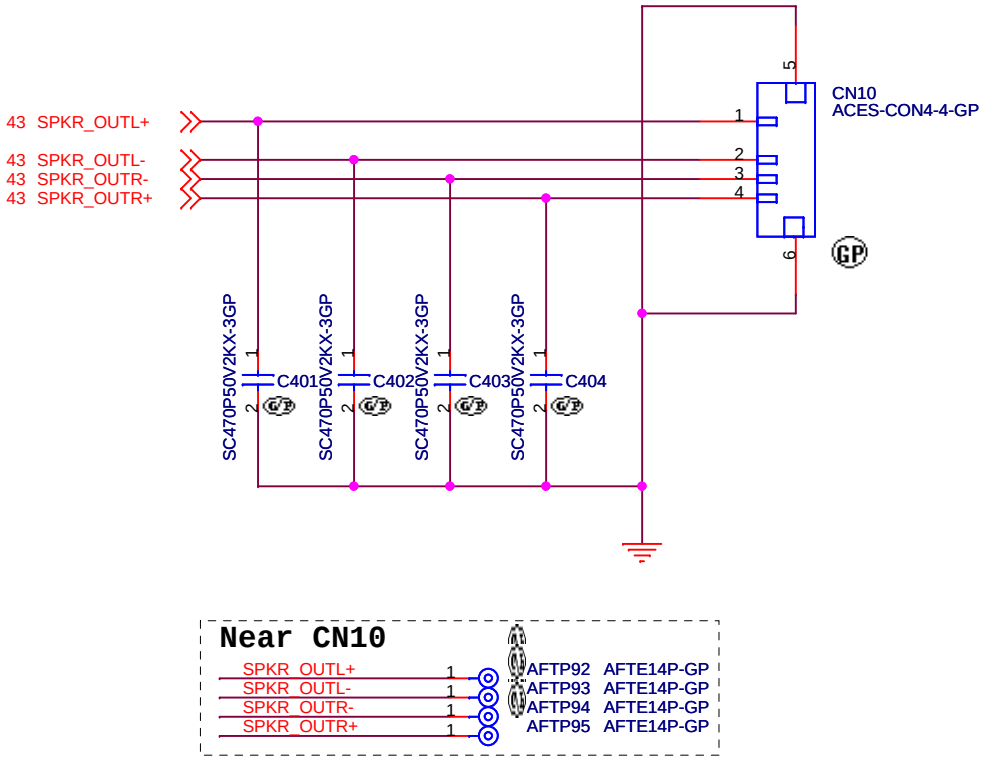

<Core Design>

緯創資通 **Wistron Corporation**
21F, 88, Sec.1, Hsin Tai Wu Rd., Hsichih,
Taipei Hsien 221, Taiwan, R.O.C.

Title: ***AUDIO SPEAKER***

Size	Document Number	Rev
A4	**Dasher-1**	**SD**

Date: Monday, January 10, 2011 Sheet 47 of 101

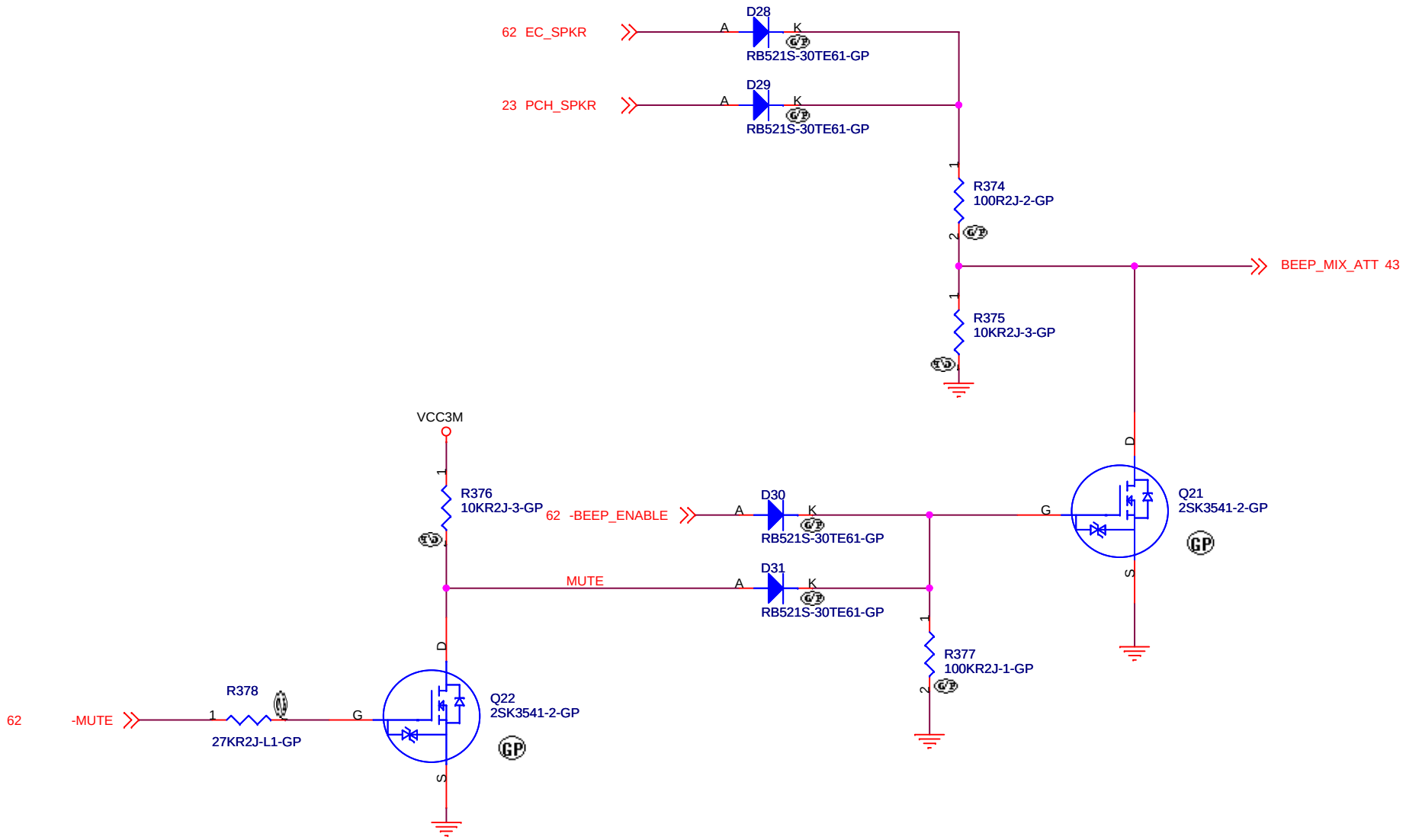

<Core Design>

緯創資通 **Wistron Corporation**
21F, 88, Sec.1, Hsin Tai Wu Rd., Hsichih,
Taipei Hsien 221, Taiwan, R.O.C.

Title
Audio BEEP

Size	Document Number	Rev
A4	**Dasher-1**	**SD**

Date: Monday, January 10, 2011 Sheet 48 of 101

B

L

A

N

K

<Core Design>

緯創資通 Wistron Corporation
21F, 88, Sec.1, Hsin Tai Wu Rd., Hsichih,
Taipei Hsien 221, Taiwan, R.O.C.

Title
BLANK

Size	Document Number	Rev
A3	Dasher-1	SD

AMT	YES	NO
U30	82579LM	82579V

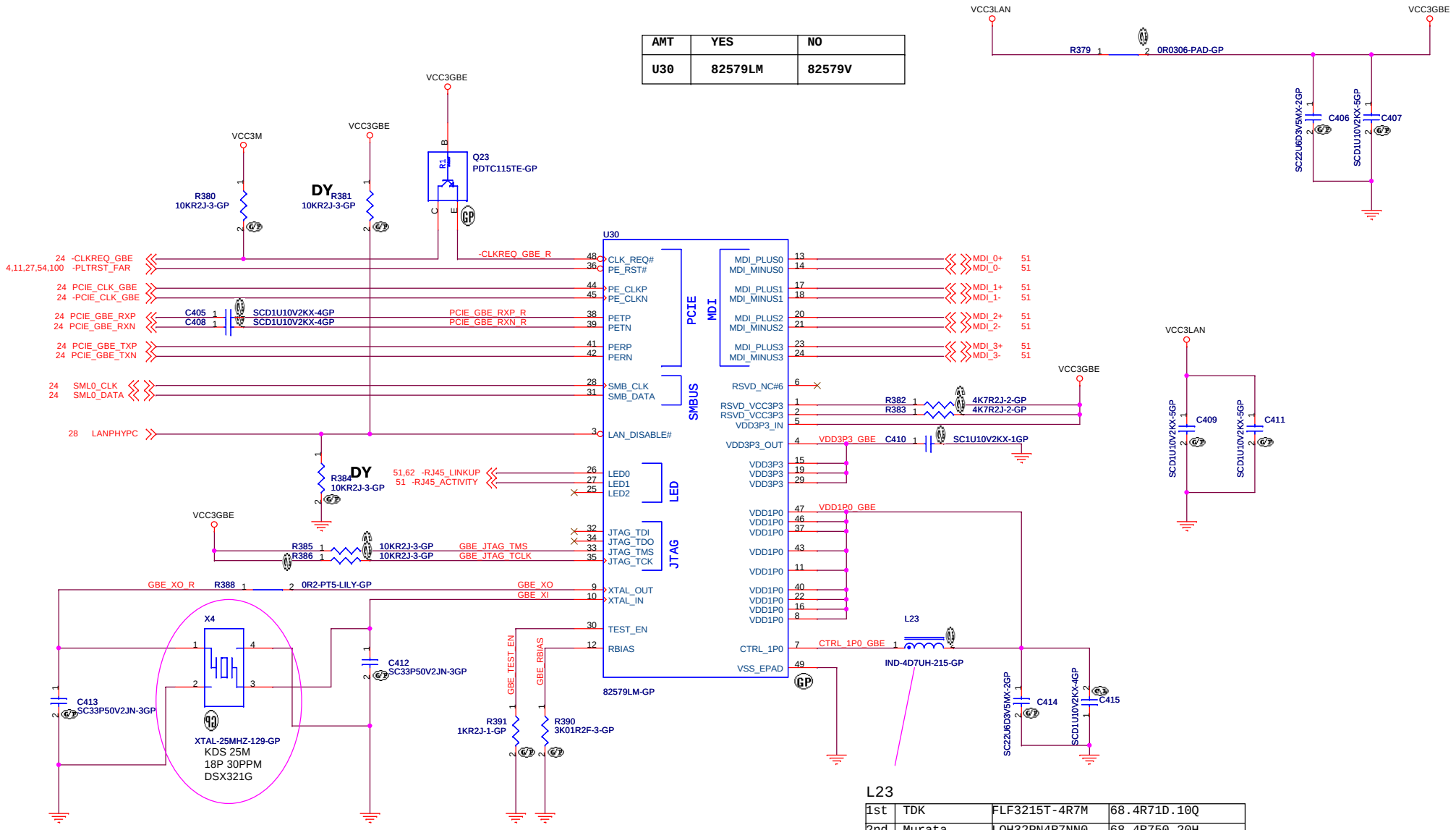

L23

1st	TDK	FLF3215T-4R7M	68.4R71D.10Q
2nd	Murata	LQH32PN4R7NN0	68.4R750.20H
3rd	Taiyo Yuden	BRL3225T4R7M	68.4R71E.10I

X4

1st	KDS	DSX321G 25M 18P 30PPM	82.30020.B11
2nd	H.ELE	HSX321S 25M 18P 30PPM	82.30020.B21
3rd	TXC	7V25020001 25M 18P 30PPM	41U6141AA

<Core Design>

緯創資通 Wistron Corporation
21F, 88, Sec.1, Hsin Tai Wu Rd., Hsichih,
Taipei Hsien 221, Taiwan, R.O.C.

Title: GBE Lewisville

Size: A3 | Document Number: Dasher-1 | Rev: SD

Date: Monday, January 10, 2011 | Sheet 50 of 101

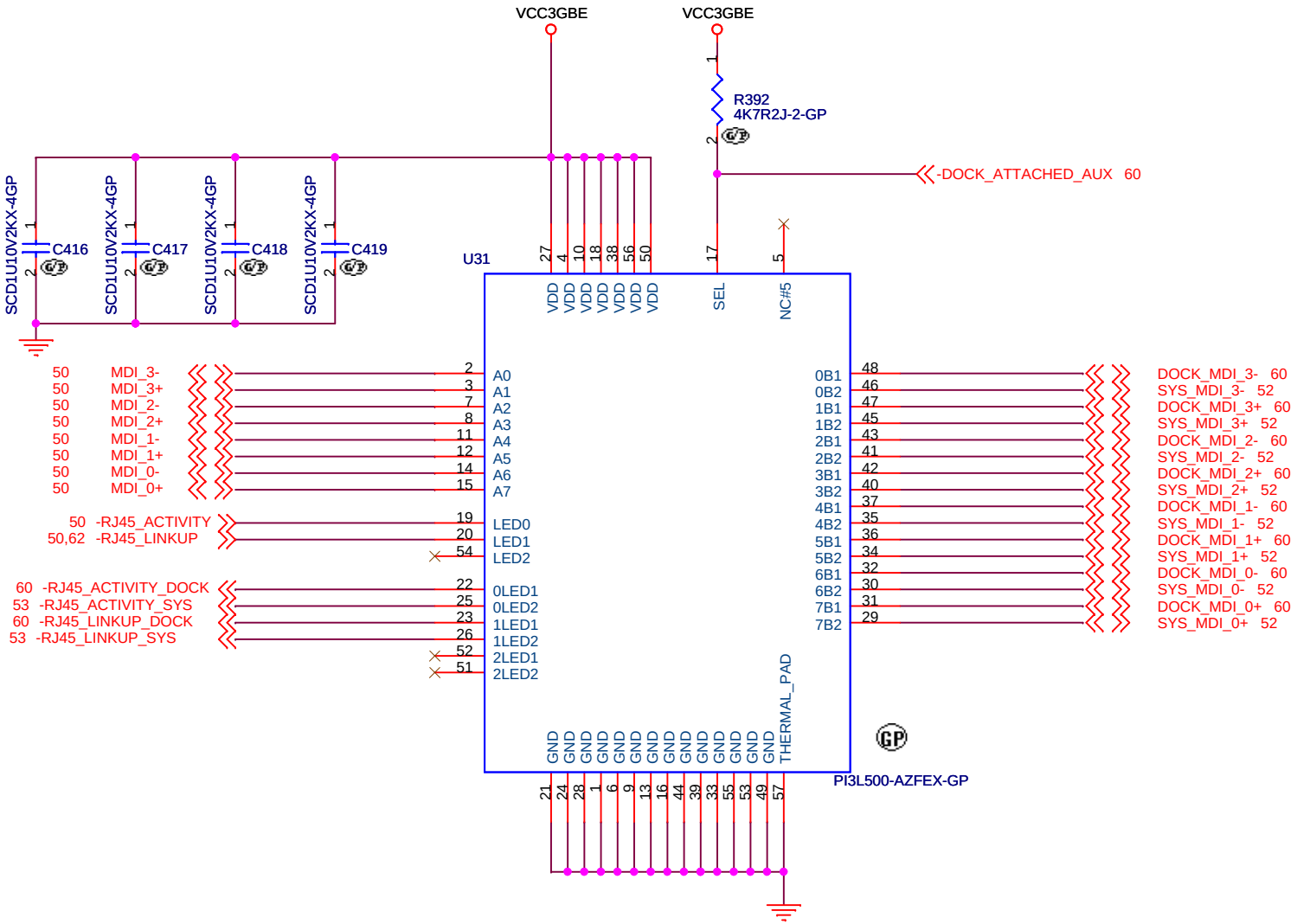

		Vendor P/N	Wistron P/N
1st	Pericom	PI3L500AZFEX	73.3L500.003
2nd	TI	TS3L500AERHUR	73.3L500.A0V
3rd	OnSemi	NS3L500	73.03500.003

<Core Design>

緯創資通 **Wistron Corporation**
21F, 88, Sec.1, Hsin Tai Wu Rd., Hsichih,
Taipei Hsien 221, Taiwan, R.O.C.

Title: ***GBE LAN Switch***

Size	Document Number	Rev
A4	**Dasher-1**	SD

Date: Monday, January 10, 2011 Sheet 51 of 101

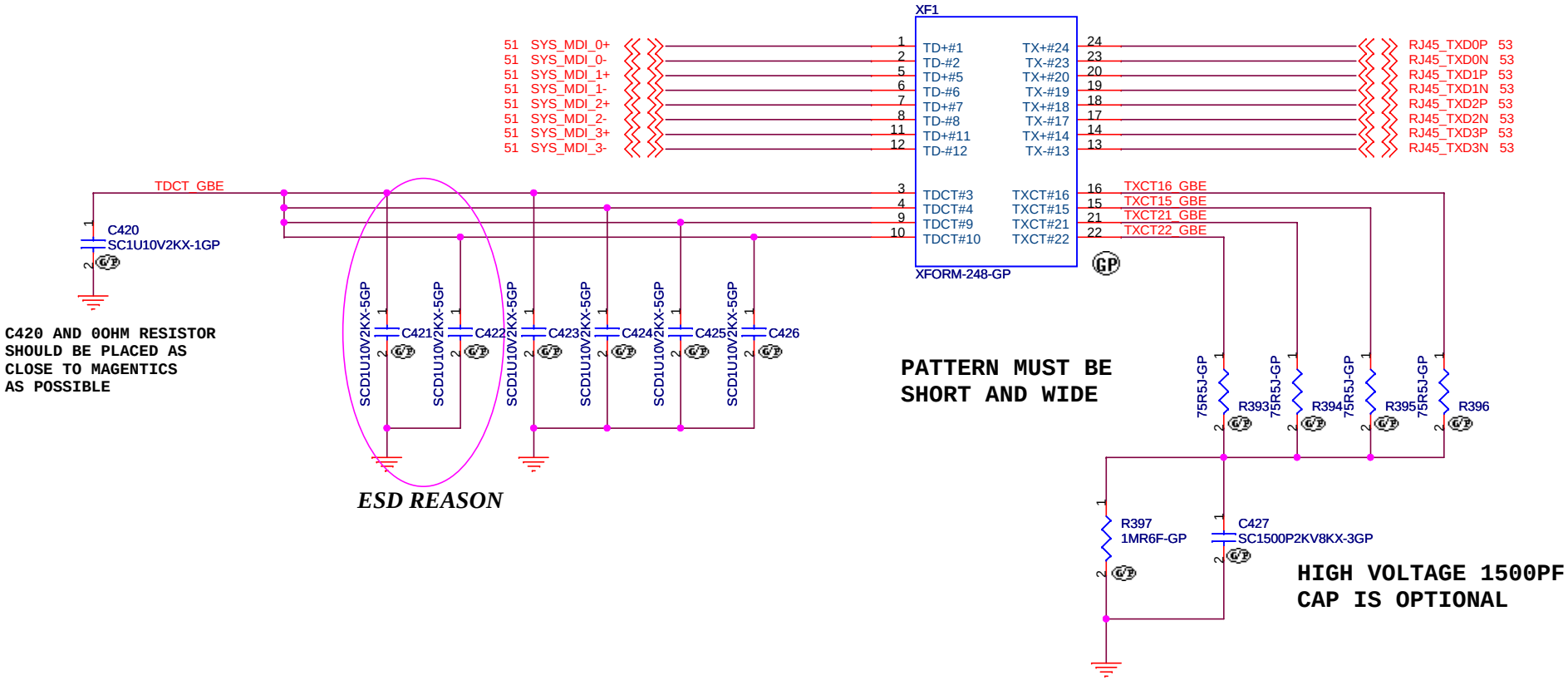

<Core Design>

緯創資通 Wistron Corporation
21F, 88, Sec.1, Hsin Tai Wu Rd., Hsichih,
Taipei Hsien 221, Taiwan, R.O.C.

Title: **GBE MAGNETICS**

Size	Document Number	Rev
Custom	Dasher-1	SD

Date: Monday, January 10, 2011 Sheet 52 of 101

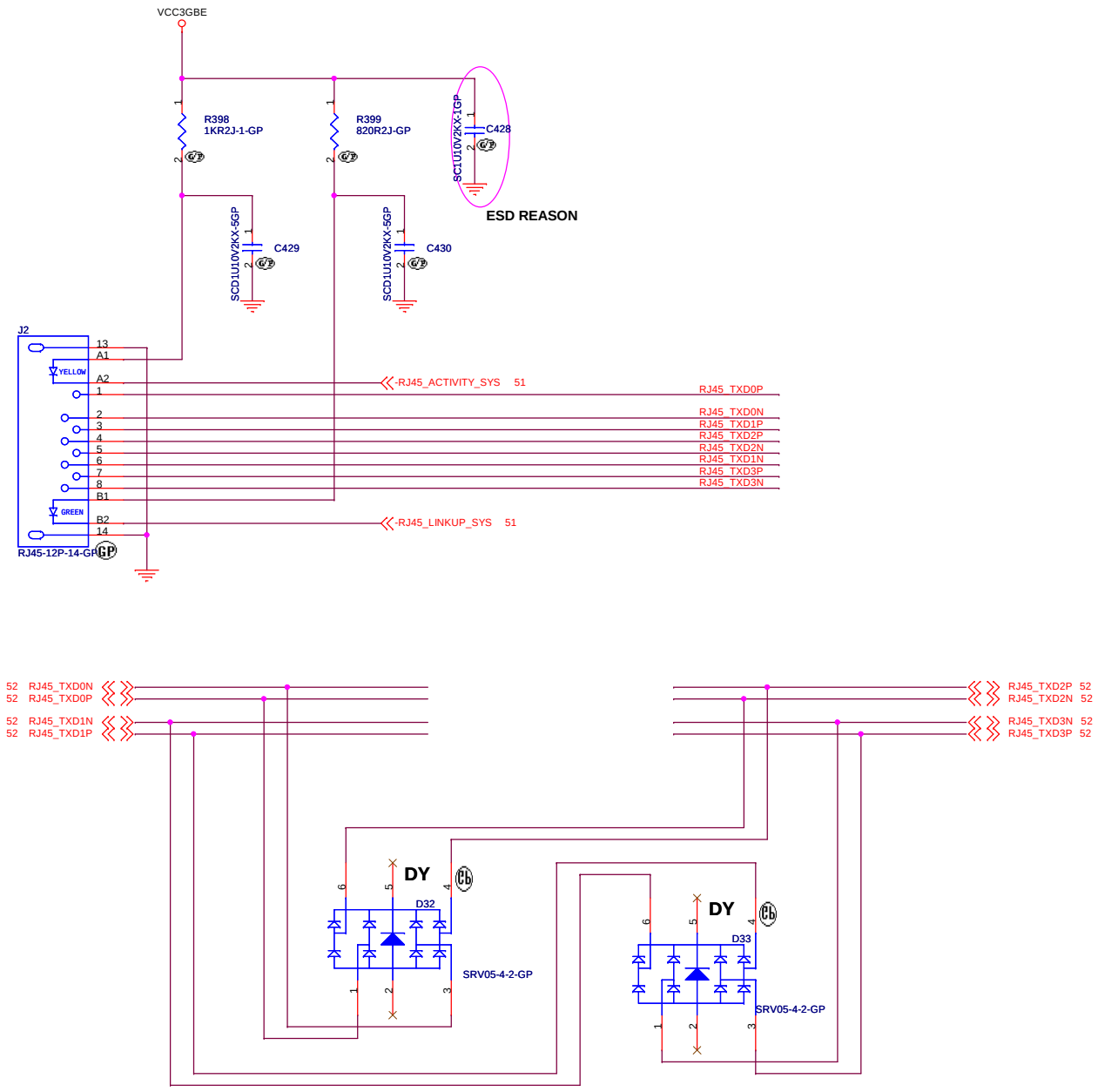

<Core Design>

緯創資通	**Wistron Corporation** 21F, 88, Sec.1, Hsin Tai Wu Rd., Hsichih, Taipei Hsien 221, Taiwan, R.O.C.	
Title	***RJ45 CONNECTOR***	
Size A3	Document Number **Dasher-1**	Rev **SD**
Date: Monday, January 10, 2011	Sheet 53 of 101	

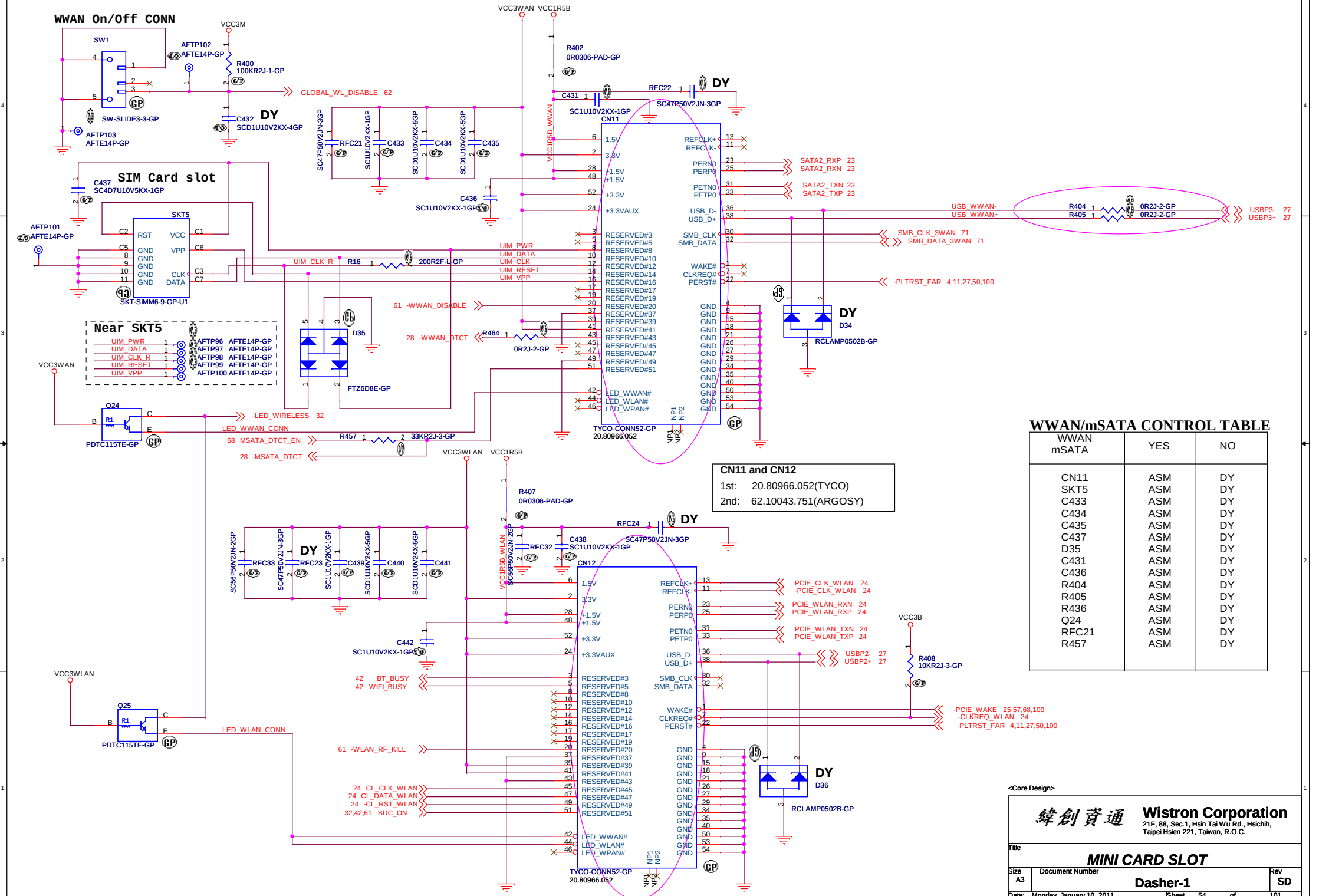
WWAN On/Off CONN
SW1
SW-SLIDE3-3-GP
AFTP102
AFTE14P-GP
AFTP103
AFTE14P-GP
VCC3M
R400
100KR2J-1-GP
C432
SCD1U10V2KX-4GP
DY
GLOBAL_WL_DISABLE 62
SC47P50V2JN-3GP
RFC21
SC1U10V2KX-1GP
C433
SCD1U10V2KX-5GP
C434
C435
C436
SC1U10V2KX-1GP
C437
SC4D7U10V5KX-1GP
SIM Card slot
SKT5
AFTP101
AFTE14P-GP
RST
VCC
VPP
GND
CLK
DATA
SKT-SIMM6-9-GP-U1
UIM_PWR
UIM_DATA
UIM_CLK
UIM_RESET
UIM_VPP
UIM_CLK_R
R16
200R2F-L-GP
Near SKT5
UIM_PWR
UIM_DATA
UIM_CLK_R
UIM_RESET
UIM_VPP
AFTP96 AFTE14P-GP
AFTP97 AFTE14P-GP
AFTP98 AFTE14P-GP
AFTP99 AFTE14P-GP
AFTP100 AFTE14P-GP
D35
FTZ6D8E-GP
VCC3WAN
Q24
PDTC115TE-GP
-LED_WIRELESS 32
LED_WWAN_CONN
68 MSATA_DTCT_EN
R457
33KR2J-3-GP
28 -MSATA_DTCT
VCC3WAN VCC1R5B
R402
0R0306-PAD-GP
C431
SC1U10V2KX-1GP
RFC22
SC47P50V2JN-3GP
CN11
1.5V
3.3V
+1.5V
+1.5V
+3.3V
+3.3VAUX
RESERVED#3
RESERVED#5
RESERVED#8
RESERVED#10
RESERVED#12
RESERVED#14
RESERVED#16
RESERVED#17
RESERVED#19
RESERVED#20
RESERVED#37
RESERVED#39
RESERVED#41
RESERVED#43
RESERVED#45
RESERVED#47
RESERVED#49
RESERVED#51
LED_WWAN#
LED_WLAN#
LED_WPAN#
REFCLK+
REFCLK-
PERN0
PERP0
PETN0
PETP0
USB_D-
USB_D+
SMB_CLK
SMB_DATA
WAKE#
CLKREQ#
PERST#
GND
NP1
NP2
TYCO-CONN52-GP
20.80966.052
SATA2_RXP 23
SATA2_RXN 23
SATA2_TXN 23
SATA2_TXP 23
USB_WWAN-
USB_WWAN+
R404
R405
0R2J-2-GP
USBP3- 27
USBP3+ 27
SMB_CLK_3WAN 71
SMB_DATA_3WAN 71
-PLTRST_FAR 4,11,27,50,100
61 -WWAN_DISABLE
28 -WWAN_DTCT
R464
0R2J-2-GP
D34
RCLAMP0502B-GP
VCC3WLAN VCC1R5B
R407
0R0306-PAD-GP
RFC24
SC47P50V2JN-3GP
C438
SC1U10V2KX-1GP
RFC32
SC56P50V2JN-2GP
RFC33
RFC23
SC47P50V2JN-3GP
C439
C440
C441
CN12
PCIE_CLK_WLAN 24
-PCIE_CLK_WLAN 24
PCIE_WLAN_RXN 24
PCIE_WLAN_RXP 24
PCIE_WLAN_TXN 24
PCIE_WLAN_TXP 24
USBP2- 27
USBP2+ 27
VCC3B
R408
10KR2J-3-GP
C442
SC1U10V2KX-1GP
42 BT_BUSY
42 WIFI_BUSY
-PCIE_WAKE 25,57,68,100
-CLKREQ_WLAN 24
-PLTRST_FAR 4,11,27,50,100
VCC3WLAN
Q25
PDTC115TE-GP
LED_WLAN_CONN
61 -WLAN_RF_KILL
24 CL_CLK_WLAN
24 CL_DATA_WLAN
24 -CL_RST_WLAN
32,42,61 BDC_ON
D36
RCLAMP0502B-GP
CN11 and CN12
1st: 20.80966.052(TYCO)
2nd: 62.10043.751(ARGOSY)
WWAN/mSATA CONTROL TABLE
WWAN mSATA | YES | NO
CN11 | ASM | DY
SKT5 | ASM | DY
C433 | ASM | DY
C434 | ASM | DY
C435 | ASM | DY
C437 | ASM | DY
D35 | ASM | DY
C431 | ASM | DY
C436 | ASM | DY
R404 | ASM | DY
R405 | ASM | DY
R436 | ASM | DY
Q24 | ASM | DY
RFC21 | ASM | DY
R457 | ASM | DY
<Core Design>
Wistron Corporation
21F, 88, Sec.1, Hsin Tai Wu Rd., Hsichih, Taipei Hsien 221, Taiwan, R.O.C.
Title
MINI CARD SLOT
Size A3
Document Number
Dasher-1
Rev SD
Date: Monday, January 10, 2011
Sheet 54 of 101

MEDIA I/F	SD/MMC	MEMORYSTICK	XD
MFIO00	SDWP#	MSBS	XD_D7
MFIO01	SD_D1		XD_D6
MFIO02	SD_D0	MS_D1	XD_D5
MFIO03	(SD_D7)		XD_D4
MFIO04	(SD_D6)	(MS_D5)	XD_D3
MFIO05	SD_CLK	MSD0	XD_D2
MFIO06			XD_D1
MFIO07	(SD_D5)	(MS_D4)	XD_D0
MFIO08	SD_CDM	MS_D2	XD_WP#
MFIO09	(SD_D4)	(MS_D6)	XD_WE#
MFIO10	SD_D3	MS_D3	XD_ALE
MFIO11	SD_D2		XD_CLE
MFIO12			XD_CE#
MFIO13		(MS_D7)	XD_RE#
MFIO14		MS_CLK	XD_R/B
MFCD0#	SDDC#		XDCD0#
MFCD1#		MSINS#	XDCD1#

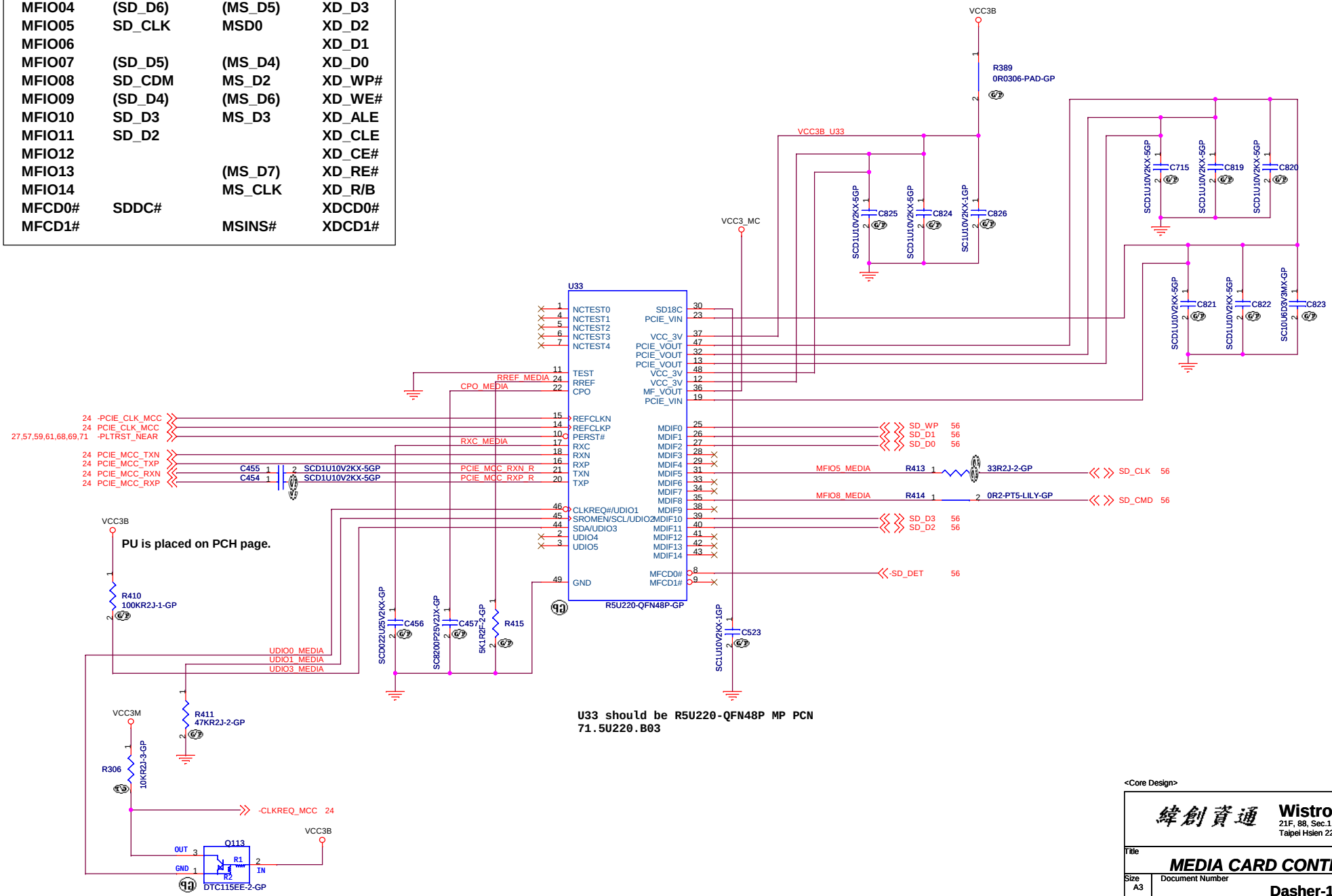

<Core Design>

緯創資通 **Wistron Corporation**
21F, 88, Sec.1, Hsin Tai Wu Rd., Hsichih,
Taipei Hsien 221, Taiwan, R.O.C.

Title: ***MEDIA CARD CONTROLLER***

Size: A3 | Document Number: **Dasher-1** | Rev: **SD**

Date: Monday, January 10, 2011 | Sheet 55 of 101

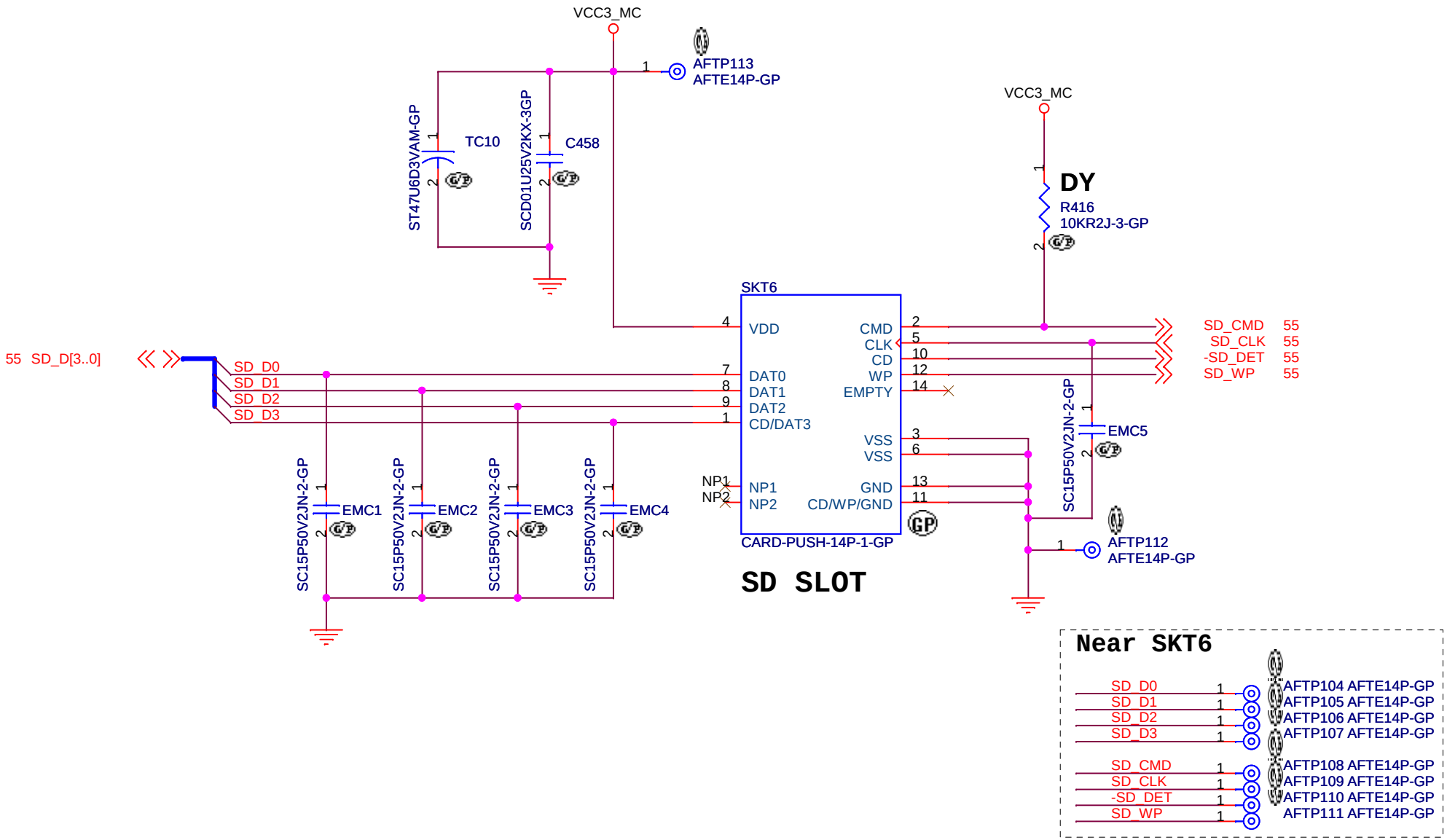

<Core Design>

緯創資通 **Wistron Corporation**
21F, 88, Sec.1, Hsin Tai Wu Rd., Hsichih,
Taipei Hsien 221, Taiwan, R.O.C.

Title: ***Media Card Slot***

Size	Document Number	Rev
A	**Dasher-1**	**SD**

Date: Monday, January 10, 2011 | Sheet 56 of 101

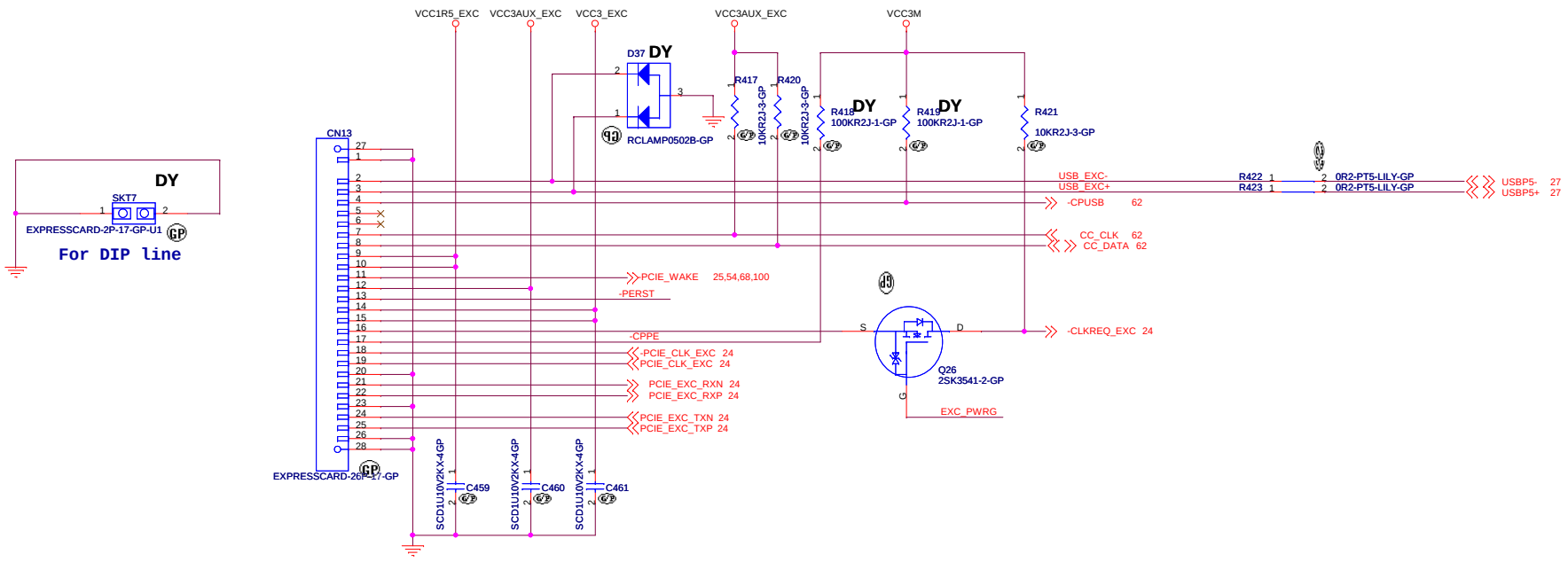

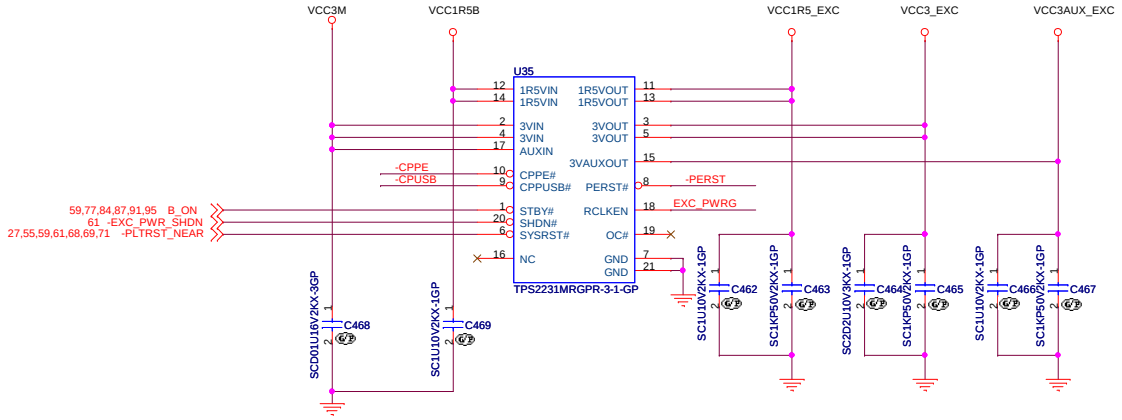

U35	TI	TPS2231MRGP-3	45K0234BA
	Rohm	BD4156MUV-E2	74.04156.07T
	Rohm	BD4157MUV-E2	74.04157.073

<Core Design>

緯創資通 **Wistron Corporation**
21F, 88, Sec.1, Hsin Tai Wu Rd., Hsichih,
Taipei Hsien 221, Taiwan, R.O.C.

Title: ***Express Card Connector***

Size	Document Number	Rev
Custom	Dasher-1	SD

Date: Monday, January 10, 2011 Sheet 57 of 101

BLANK

<Core Design>

緯創資通	**Wistron Corporation** 21F, 88, Sec.1, Hsin Tai Wu Rd., Hsichih, Taipei Hsien 221, Taiwan, R.O.C.	
Title	***BLANK***	
Size A	Document Number **Dasher-1**	Rev **SD**
Date: Monday, January 10, 2011	Sheet 58 of 101	

Golden Finger for Debug Board

Debug card connector

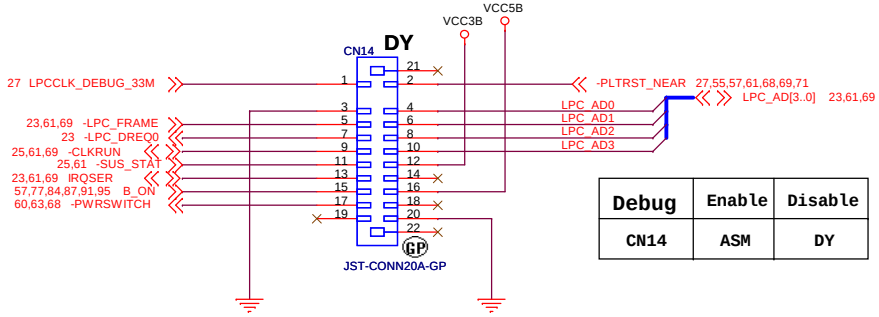

Debug	Enable	Disable
CN14	ASM	DY

Put "easy-to -access" place

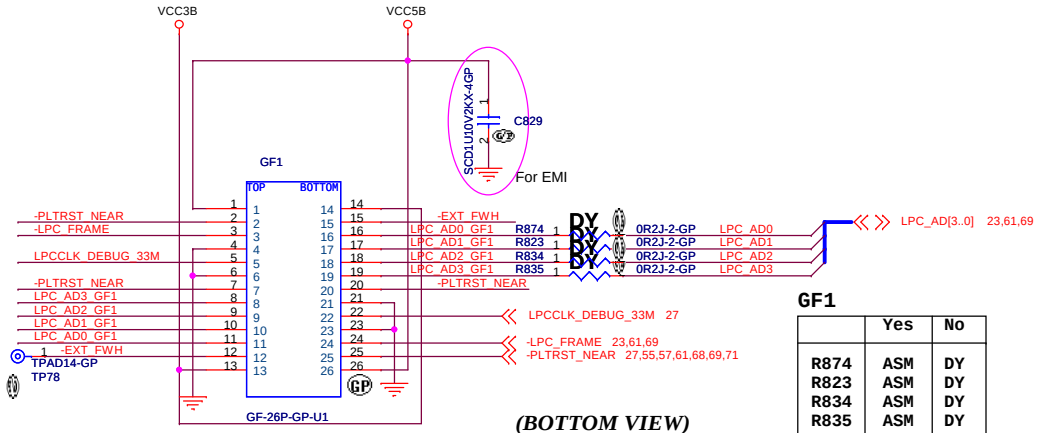

GF1

	Yes	No
R874	ASM	DY
R823	ASM	DY
R834	ASM	DY
R835	ASM	DY
R235	ASM	DY

SVT Logic

(BOTTOM VIEW)
TOP VIEW

(26) (25)····(15) (14)

13 12 ···· 2 1

64Mbit SPI FLASH (for vPRO model)		
S08		
Marcronix	MX25L6436EM2I-10G	72.25643.001
Marcronix	MX25L6406EM2I-10G	
Winbond	W25Q64CVSSIG	72.25Q64.B01
Atmel	AT25DF641 or 641A	72.25641.003
MLP8		
Numonyx	M25PX64-VMD6TG	72.25P64.E01

Part Number wait confirm

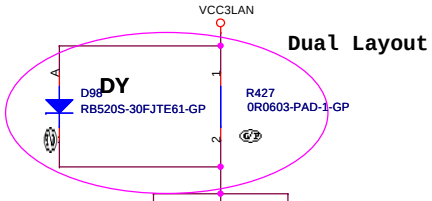

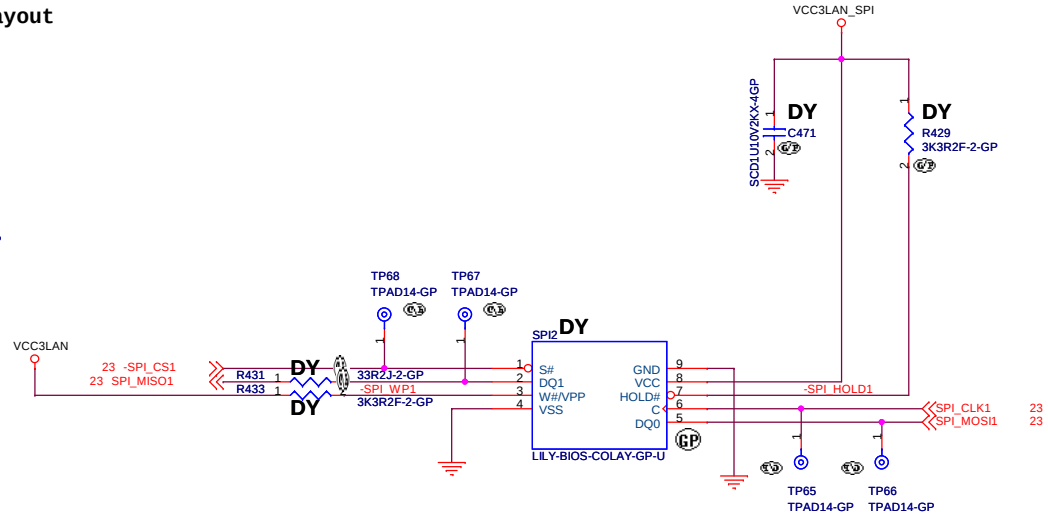

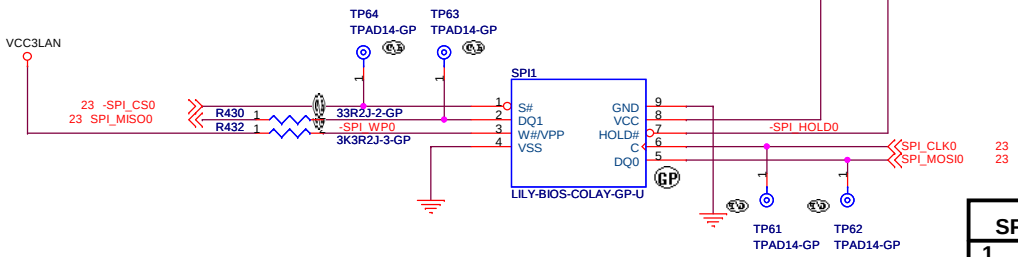

SO8 and WSON8 are both supported!

SF 100 PIN HEADER INTERFACE (Top View)					
1	VCC	R427.2	GND	GND	2
3	CS#	R148.1	R145.1	CLK	4
5	MISO	R430.2	R151.1	MOSI	6
7	(KEY)	N/A	N/A	(RESET)	8

<Core Design>

緯創資通 **Wistron Corporation**
21F, 88, Sec.1, Hsin Tai Wu Rd., Hsichih,
Taipei Hsien 221, Taiwan, R.O.C.

Title: ***SPI&LPC debug card***

Size: A3 | Document Number: **Dasher-1** | Rev: **SD**

Date: Monday, January 10, 2011 | Sheet 59 of 101

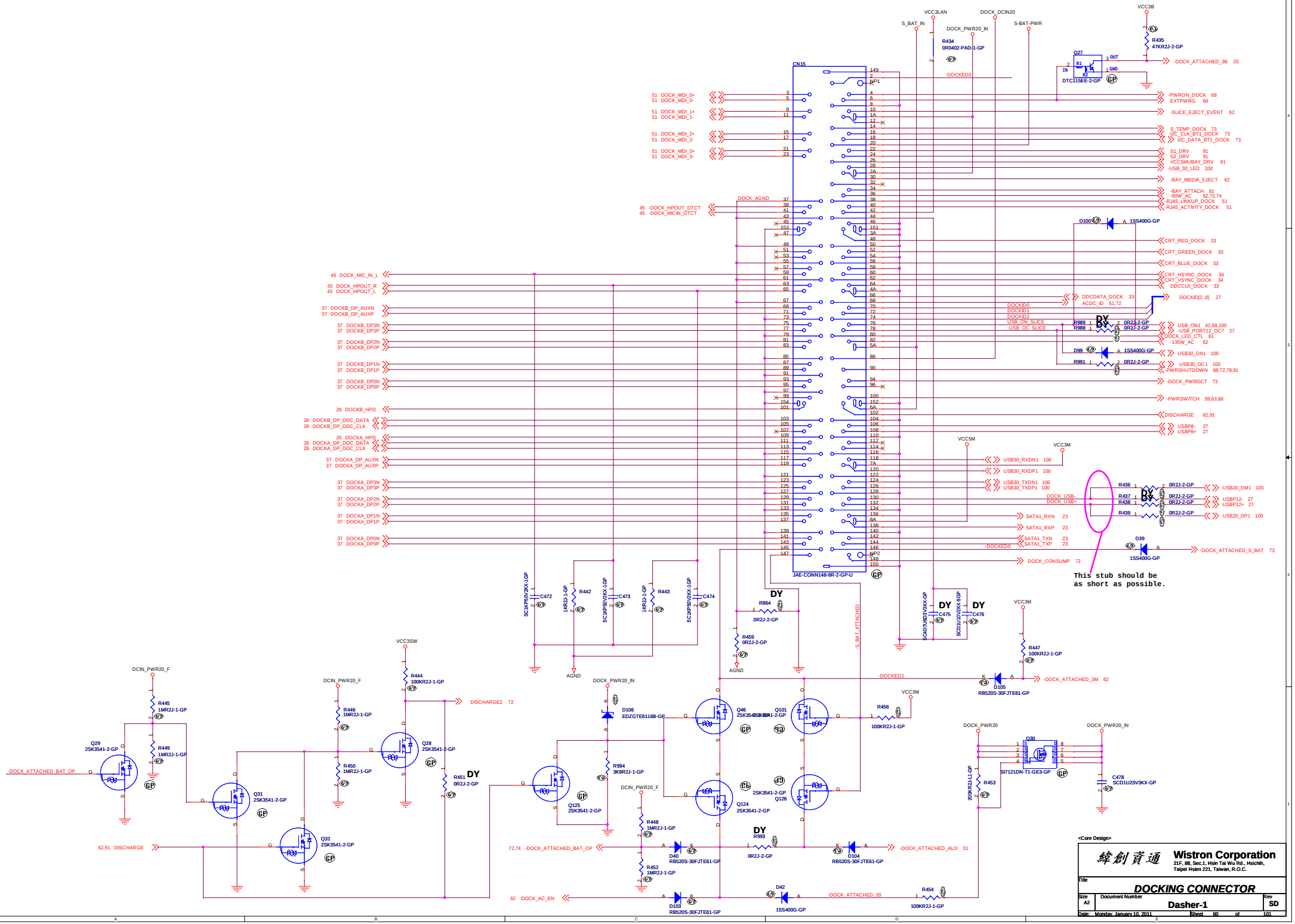
CN15
JAE-CONN148-6R-2-GP-U
VCC3LAN
DOCK_DCIN20
VCC3B
S_BAT_IN
DOCK_PWR20_IN
S-BAT-PWR
R434 0R0402-PAD-1-GP
R435 47KR2J-2-GP
Q27 DTC115EE-2-GP
-DOCKED0
-DOCK_ATTACHED_3B 33
51 DOCK_MDI_0+
51 DOCK_MDI_0-
51 DOCK_MDI_1+
51 DOCK_MDI_1-
51 DOCK_MDI_2+
51 DOCK_MDI_2-
51 DOCK_MDI_3+
51 DOCK_MDI_3-
-PWRON_DOCK 68
EXTPWRG 68
-SLICE_EJECT_EVENT 62
S_TEMP_DOCK 73
I2C_CLK_BT1_DOCK 73
I2C_DATA_BT1_DOCK 73
S1_DRV 91
S2_DRV 91
VCC5MUBAY_DRV 91
-USB_30_LED 100
-BAY_MEDIA_EJECT 62
-BAY_ATTACH 61
-90W_AC 62,72,74
-RJ45_LINKUP_DOCK 51
-RJ45_ACTIVITY_DOCK 51
DOCK_AGND
45 -DOCK_HPOUT_DTCT
45 -DOCK_MICIN_DTCT
D100 1SS400G-GP
CRT_RED_DOCK 33
CRT_GREEN_DOCK 33
CRT_BLUE_DOCK 33
CRT_HSYNC_DOCK 34
CRT_VSYNC_DOCK 34
DDCCLK_DOCK 33
DDCDATA_DOCK 33
ACDC_ID 61,72
DOCKID[2..0] 27
DOCKID0
DOCKID1
DOCKID2
USB_ON_SLICE
-USB_OC_SLICE
R989 0R2J-2-GP
R988 0R2J-2-GP
USB_ON1 42,68,100
-USB_PORT12_OC7 27
DOCK_LED_CTL 61
-19SW_AC 62
D99 1SS400G-GP
USB30_ON1 100
R991 0R2J-2-GP
-USB30_OC1 100
-PWRSHUTDOWN 68,72,78,91
-DOCK_PWRDCT 73
-PWRSWITCH 59,63,68
DISCHARGE 62,91
USBP8- 27
USBP8+ 27
46 DOCK_MIC_IN_L
43 DOCK_HPOUT_R
43 DOCK_HPOUT_L
37 DOCKB_DP_AUXN
37 DOCKB_DP_AUXP
37 DOCKB_DP3N
37 DOCKB_DP3P
37 DOCKB_DP2N
37 DOCKB_DP2P
37 DOCKB_DP1N
37 DOCKB_DP1P
37 DOCKB_DP0N
37 DOCKB_DP0P
26 DOCKB_HPD
26 DOCKB_DP_DDC_DATA
26 DOCKB_DP_DDC_CLK
26 DOCKA_HPD
26 DOCKA_DP_DDC_DATA
26 DOCKA_DP_DDC_CLK
37 DOCKA_DP_AUXN
37 DOCKA_DP_AUXP
37 DOCKA_DP3N
37 DOCKA_DP3P
37 DOCKA_DP2N
37 DOCKA_DP2P
37 DOCKA_DP1N
37 DOCKA_DP1P
37 DOCKA_DP0N
37 DOCKA_DP0P
VCC5M
VCC3M
USB30_RXDN1 100
USB30_RXDP1 100
USB30_TXDN1 100
USB30_TXDP1 100
DOCK_USB-
DOCK_USB+
R436 0R2J-2-GP
R437 0R2J-2-GP
R438 0R2J-2-GP
R439 0R2J-2-GP
USB20_DM1 100
USBP12- 27
USBP12+ 27
USB20_DP1 100
SATA1_RXN 23
SATA1_RXP 23
SATA1_TXN 23
SATA1_TXP 23
-DOCKED0
D39 1SS400G-GP
-DOCK_ATTACHED_S_BAT 73
DOCK_CONSUMP 72
This stub should be as short as possible.
SC1K P50V 2KX-1-GP
C472
R442 1KR2J-1-GP
SC1MP 50V 3KX-1-GP
C473
R443 1KR2J-1-GP
SC1MP 50V 3KX-1-GP
C474
R864 0R2J-2-GP
R459 0R2J-2-GP
AGND
S_BAT_ATTACHED
SC4D7U 6D3V 3KX-GP
C475
SC2D1U 10V 2KX-6-GP
C476
R447 100KR2J-1-GP
-DOCKED2
D105 RB520S-30FJTE61-GP
-DOCK_ATTACHED_3M 62
VCC3SW
R444 100KR2J-1-GP
DISCHARGE2 72
DCIN_PWR20_F
R445 1MR2J-1-GP
R449 1MR2J-1-GP
Q29 2SK3541-2-GP
-DOCK_ATTACHED_BAT_OP
Q31 2SK3541-2-GP
Q32 2SK3541-2-GP
62,91 DISCHARGE
R446 1MR2J-1-GP
R450 1MR2J-1-GP
Q28 2SK3541-2-GP
R451 0R2J-2-GP
DY
DOCK_PWR20_IN
D106 EDZGTE6116B-GP
Q125 2SK3541-2-GP
R994 3K9R2J-1-GP
R448 1MR2J-1-GP
R452 1MR2J-1-GP
Q46 2SK3541-2-GP
Q101 2SK3541-2-GP
Q124 2SK3541-2-GP
Q126 2SK3541-2-GP
R456 100KR2J-1-GP
R993 0R2J-2-GP
72,74 -DOCK_ATTACHED_BAT_OP
D40 RB520S-30FJTE61-GP
D104 RB520S-30FJTE61-GP
-DOCK_ATTACHED_AUX 51
62 -DOCK_AC_EN
D103 RB520S-30FJTE61-GP
D42 1SS400G-GP
-DOCK_ATTACHED_20
R454 100KR2J-1-GP
DOCK_PWR20
Q30 SI7121DN-T1-GE3-GP
R453 20KR2J-1-GP
C478 SCD1U 25V 3KX-GP
<Core Design>
Wistron Corporation
21F, 88, Sec.1, Hsin Tai Wu Rd., Hsichih, Taipei Hsien 221, Taiwan, R.O.C.
Title
DOCKING CONNECTOR
Size A2
Document Number Dasher-1
Rev SD
Date: Monday, January 10, 2011
Sheet 60 of 101

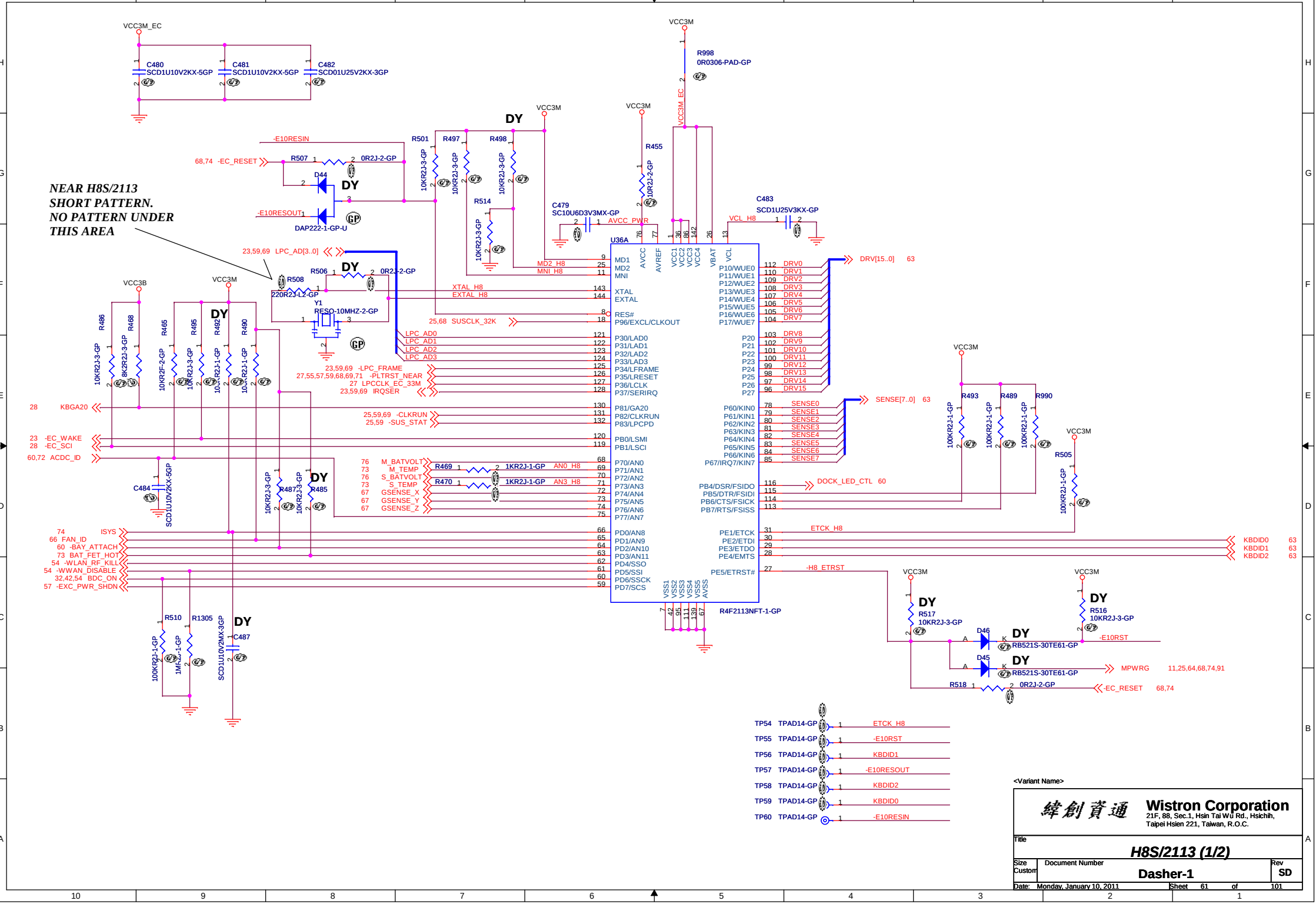

<Variant Name>

Wistron Corporation
21F, 88, Sec.1, Hsin Tai Wu Rd., Hsichih,
Taipei Hsien 221, Taiwan, R.O.C.

Title: H8S/2113 (1/2)

Size: Custom | Document Number: Dasher-1 | Rev: SD

Date: Monday, January 10, 2011 | Sheet 61 of 101

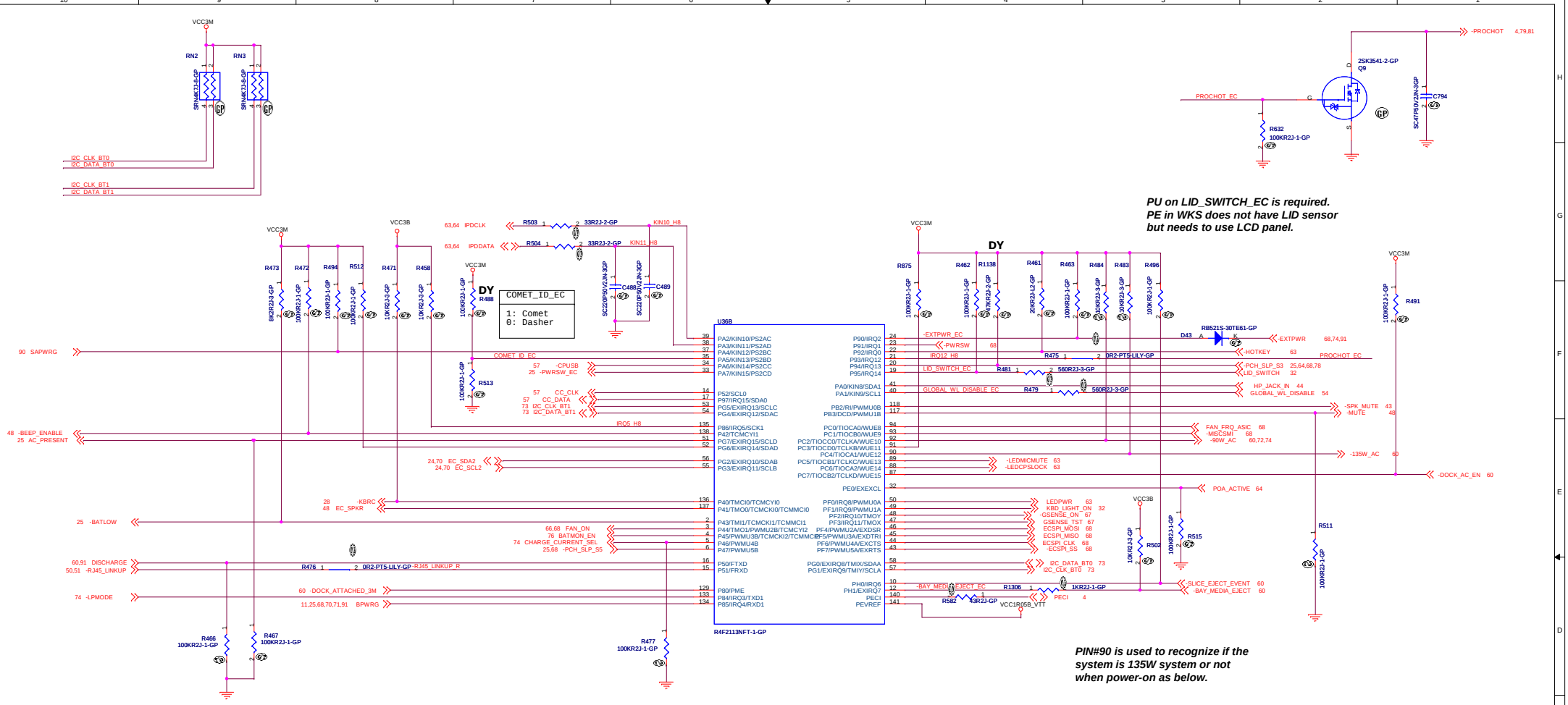

?

E10A DEBUG I/F	ENABLE	DISABLE
R506 R515	NO_ASM NO_ASM	ASM ASM
D47 D48 D49 R499 R513 R514	ASM ASM ASM ASM ASM ASM	NO_ASM NO_ASM NO_ASM ASM NO_ASM NO_ASM
R97 R511	ASM NO_ASM	NO_ASM ASM
R960 R509	ASM NO_ASM	NO_ASM ASM
R967 R968 R969	NO_ASM NO_ASM NO_ASM	ASM ASM ASM

<Variant Name>

緯創資通 Wistron Corporation
21F, 88, Sec.1, Hsin Tai Wu Rd., Hsichih,
Taipei Hsien 221, Taiwan, R.O.C.

Title: H8S/2113(2/2)

Size: A2 | Document Number: Dasher-1 | Rev: SD

Date: Monday, January 10, 2011 | Sheet 62 of 101

Keyboard Connector

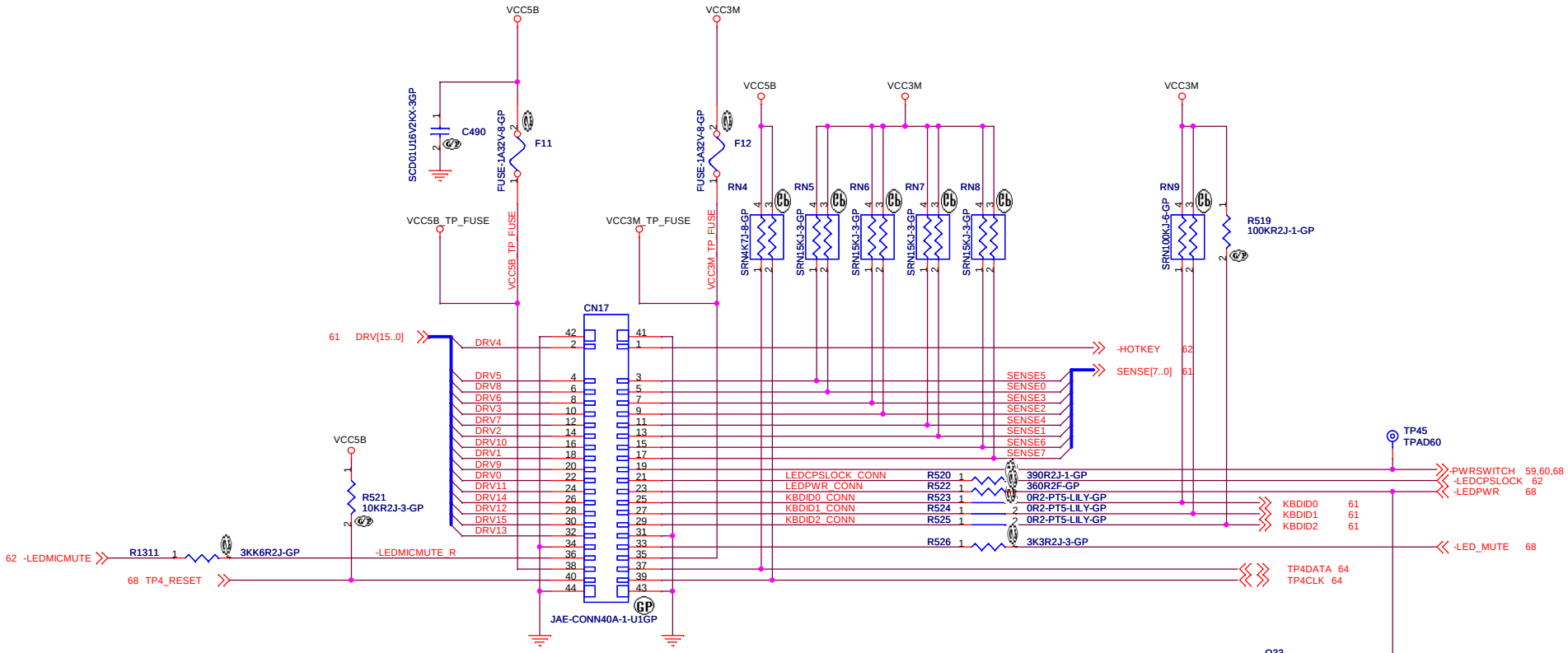

HOTKEY#	IPDCLK
DRV4	to R521

Keyboard Connector Top View

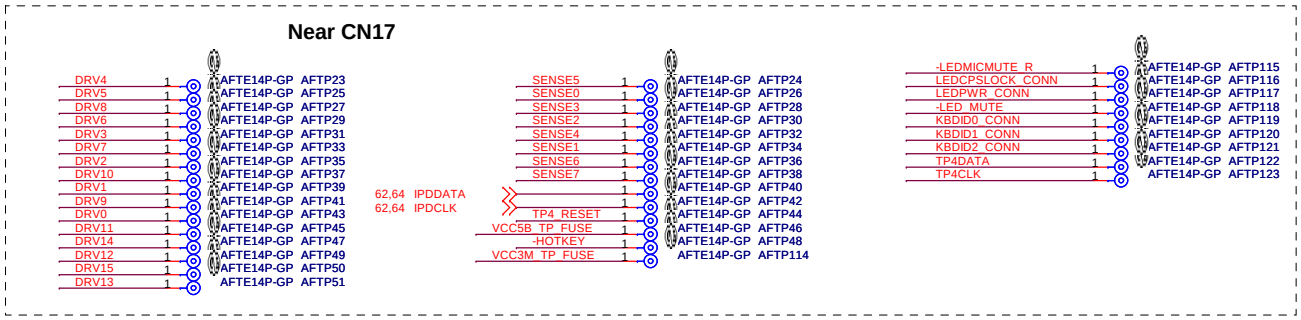

<Core Design>

緯創資通 Wistron Corporation
21F, 88, Sec.1, Hsin Tai Wu Rd., Hsichih,
Taipei Hsien 221, Taiwan, R.O.C.

Title	KEYBOARD CONNECTOR	
Size A3	Document Number Dasher-1	Rev SD
Date: Monday, January 10, 2011	Sheet 63 of 101	

Fingerprint Reader / Touch PAD

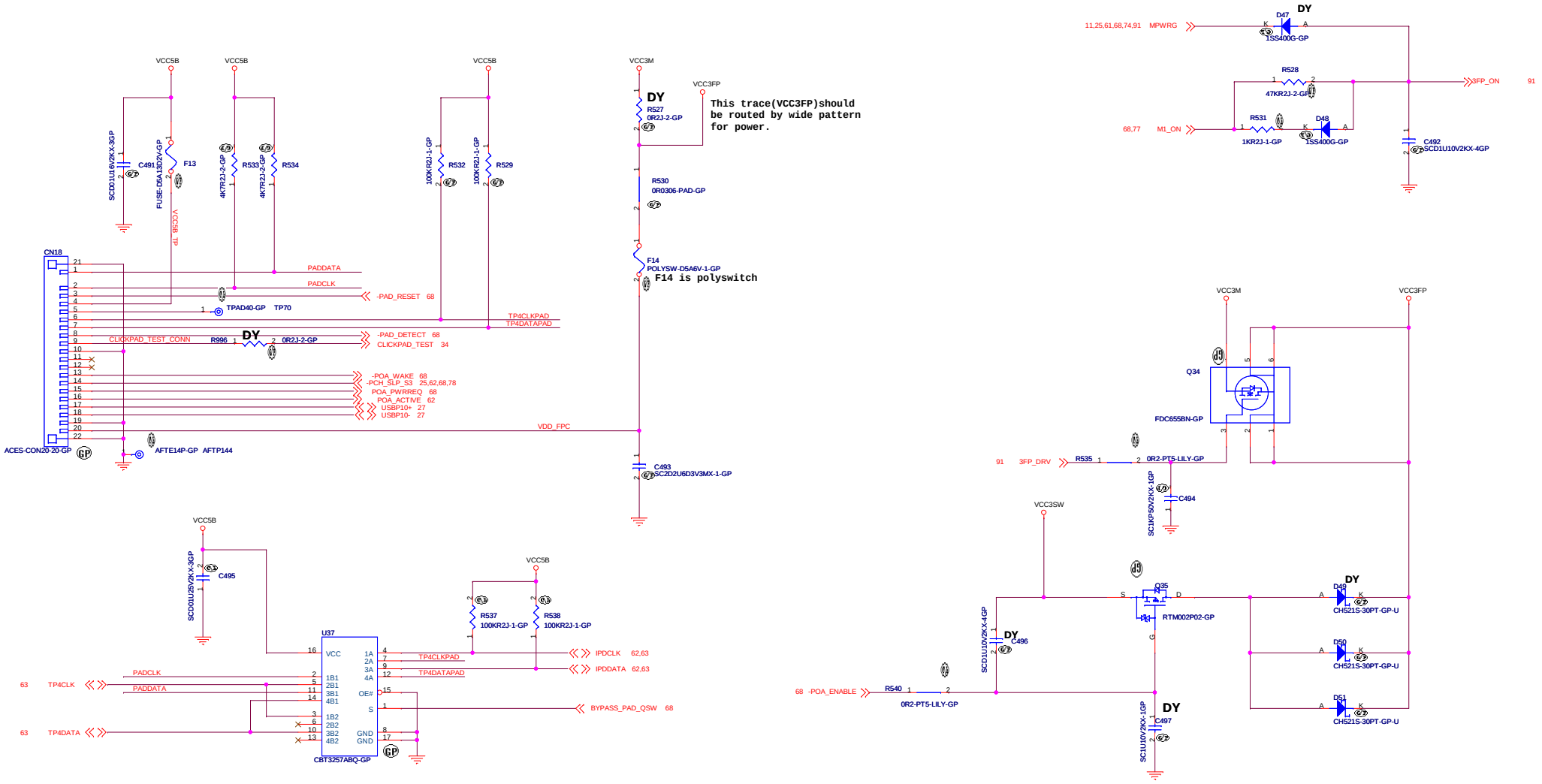

<Core Design>

緯創資通 **Wistron Corporation**
21F, 88, Sec.1, Hsin Tai Wu Rd., Hsichih,
Taipei Hsien 221, Taiwan, R.O.C.

Title: ***TOUCH PAD CONNECTOR***

Size	Document Number	Rev
Custom	Dasher-1	SD

Date: Monday, January 10, 2011 Sheet 64 of 101

BLANK

<Core Design>

緯創資通	**Wistron Corporation** 21F, 88, Sec.1, Hsin Tai Wu Rd., Hsichih, Taipei Hsien 221, Taiwan, R.O.C.	
Title	***BLANK***	
Size A	Document Number **Dasher-1**	Rev **SD**
Date: Monday, January 10, 2011	Sheet 65 of 101	

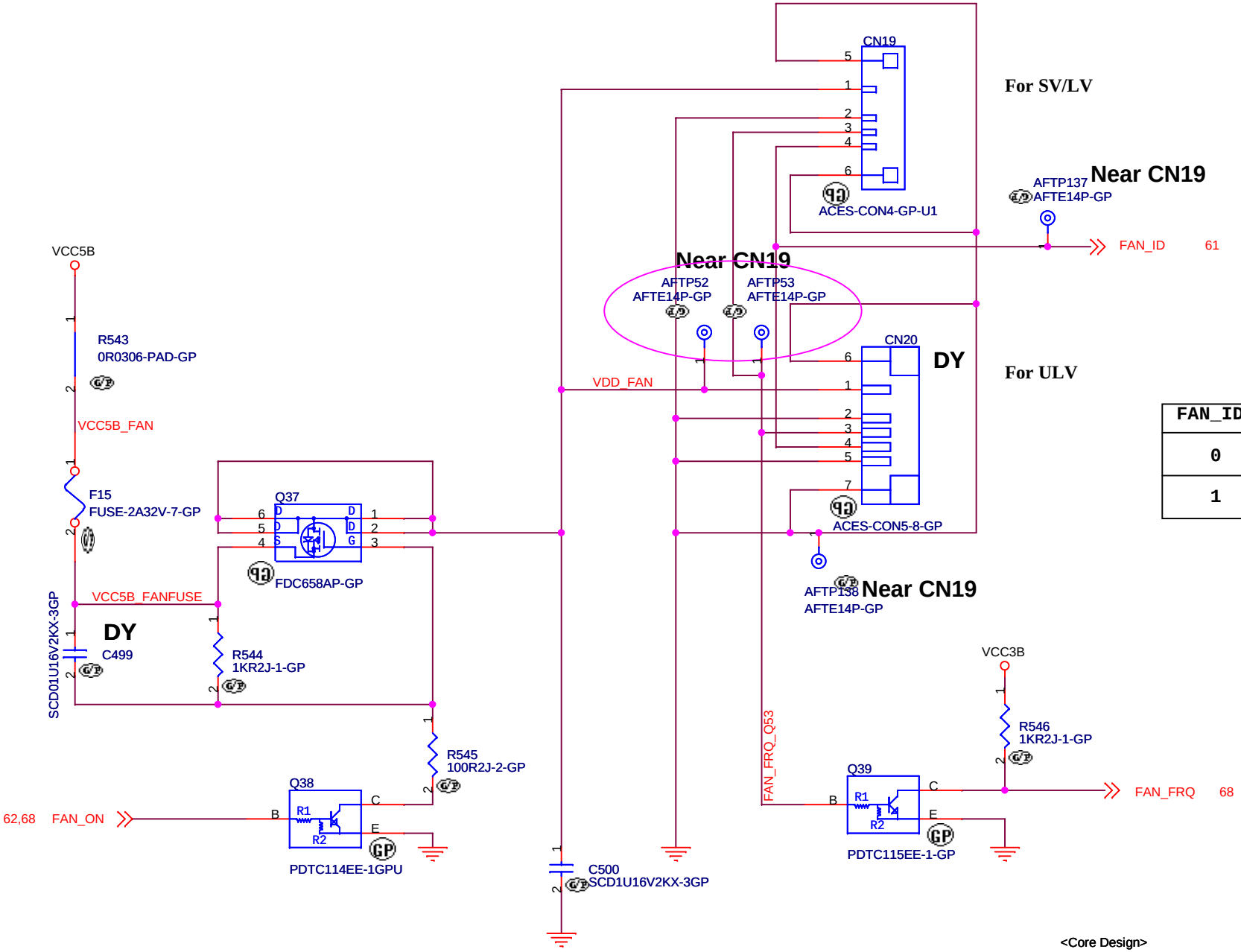

FAN_ID	Thermal module
0	THT
1	AVC or DELTA

<Core Design>

緯創資通 **Wistron Corporation**
21F, 88, Sec.1, Hsin Tai Wu Rd., Hsichih,
Taipei Hsien 221, Taiwan, R.O.C.

Title: ***FAN Control***

Size: A4 | Document Number: **Dasher-1** | Rev: **SD**

Date: Monday, January 10, 2011 | Sheet 66 of 101

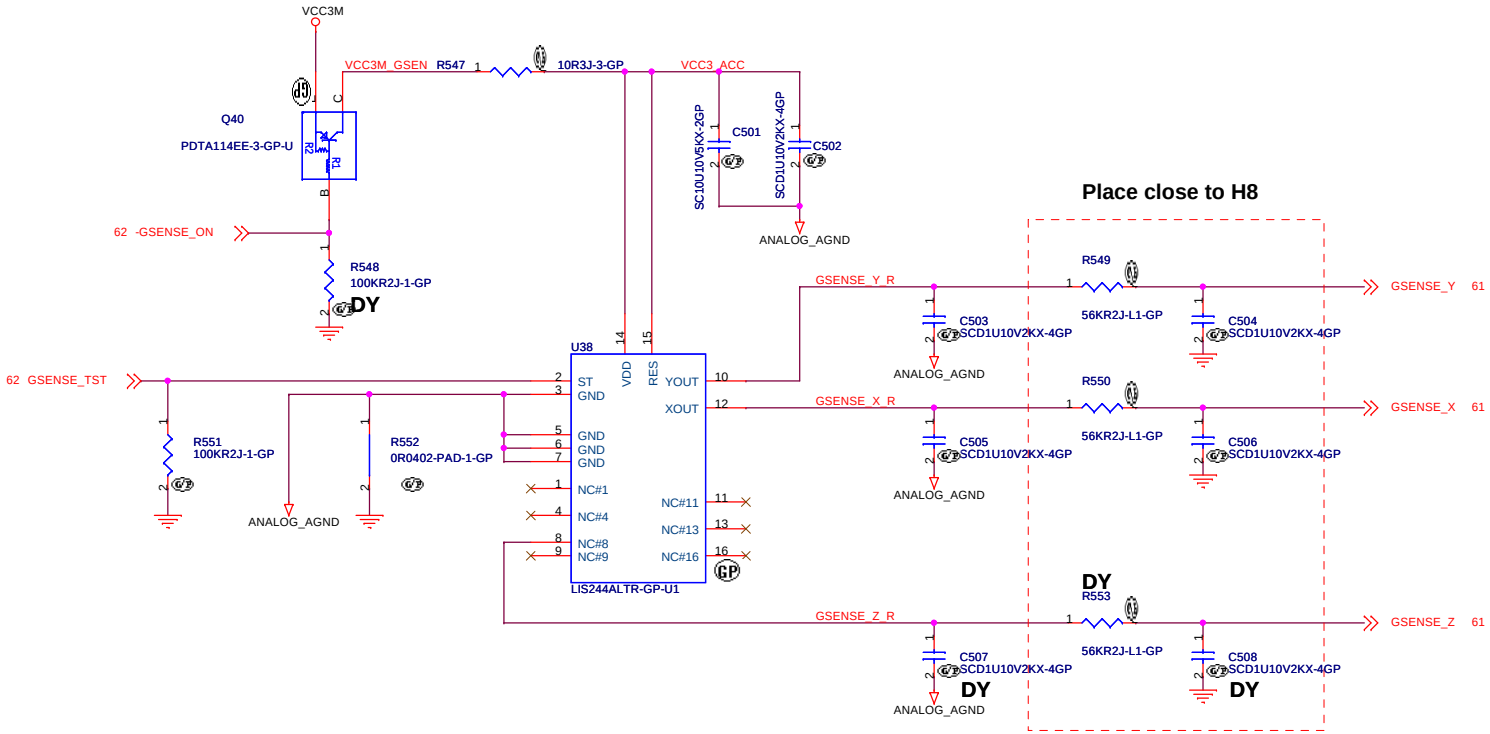

Width = 6 mil & Spacing = 10 mil
for three Output traces

	LIS244AL LIS34AL	No Accel
R548	DY	ASM
R551	ASM	ASM
U38	ASM	DY
Q40 R547 C501 C502	ASM ASM ASM ASM	DY DY DY DY
R552	ASM	DY
C503 R549 C504	ASM ASM ASM	DY DY DY
C505 R550 C506	ASM ASM ASM	DY DY DY
C507 R553 C508	DY	DY

U38

Primary	STMicro LIS244AL	74.00244.0BZ
Second	STMicro LIS34AL	74.00034.0BZ
Third	Kionix KXTC8-2850	74.KXTC8.0BZ

Layout Comment :

(1) Place C475,C476,Q64,R572,R580 C464,C472,R564,R569 close to U26 ?

(2) Avoid routing under DCDC switching area.

<Core Design>

緯創資通 **Wistron Corporation**
21F, 88, Sec.1, Hsin Tai Wu Rd., Hsichih,
Taipei Hsien 221, Taiwan, R.O.C.

Title: **G-SENSOR**

Size: A3 | Document Number: **Dasher-1** | Rev: SD

Date: Monday, January 10, 2011 | Sheet 67 of 101

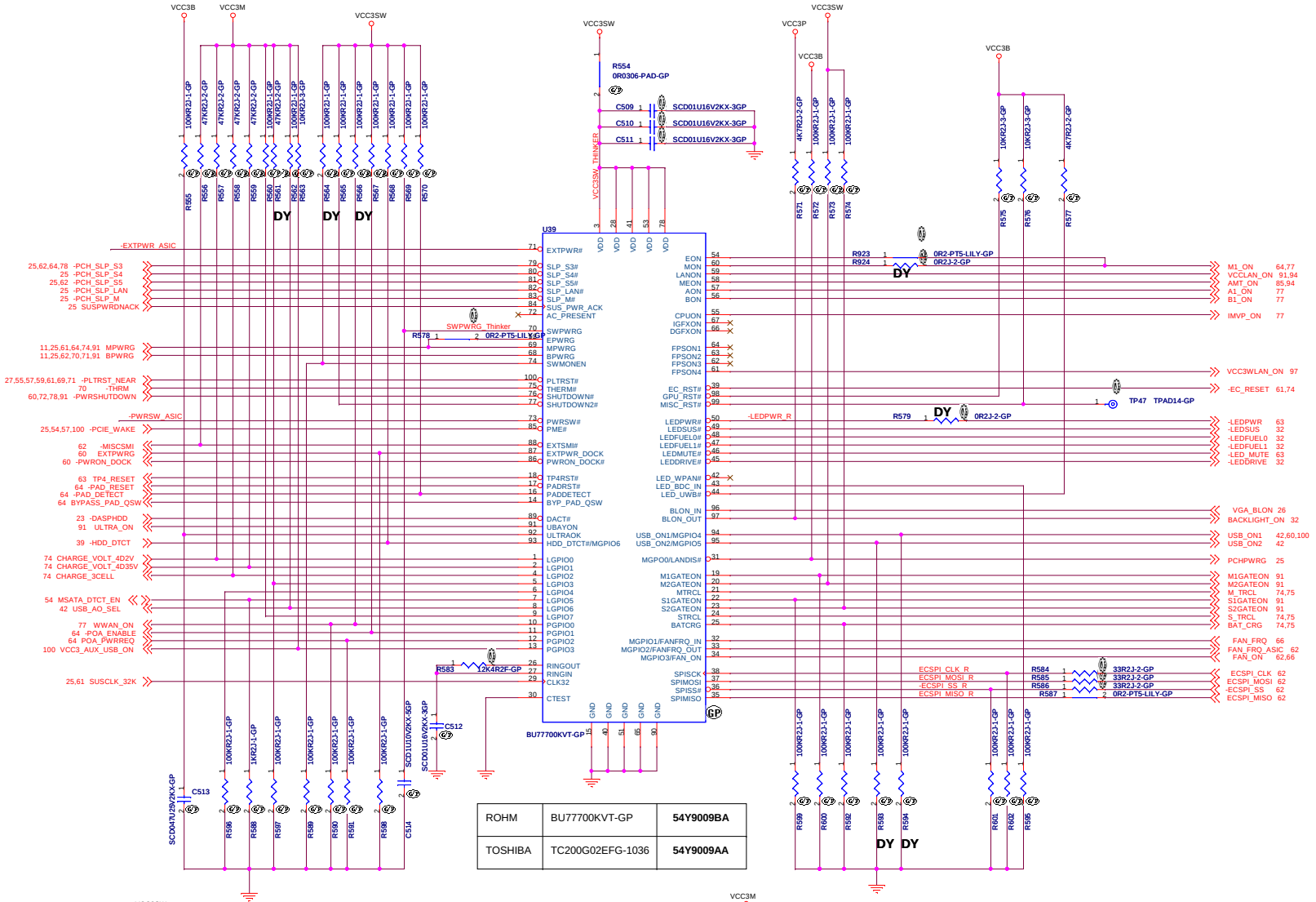

ROHM	BU77700KVT-GP	54Y9009BA
TOSHIBA	TC200G02EFG-1036	54Y9009AA

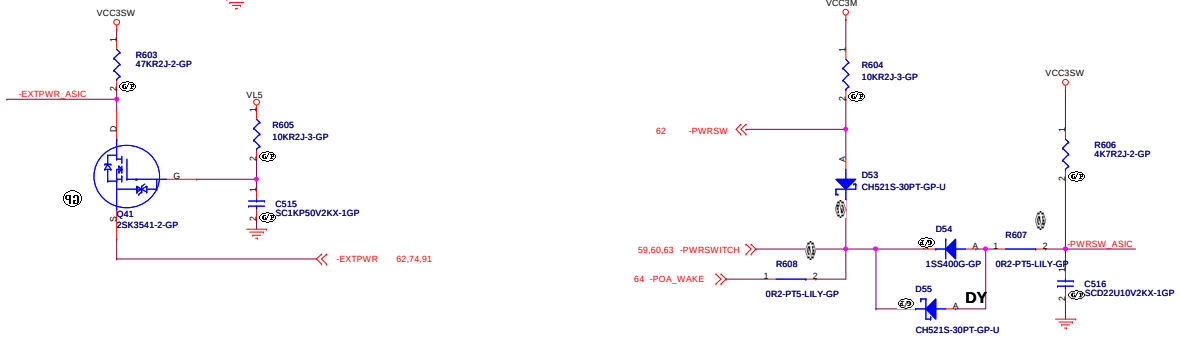

<Core Design>

緯創資通 Wistron Corporation
21F, 88, Sec.1, Hsin Tai Wu Rd., Hsichih,
Taipei Hsien 221, Taiwan, R.O.C.

Title: **Thinker-1**

Size: Custom | Document Number: Dasher-1 | Rev: SD

Date: Monday, January 10, 2011 | Sheet 68 of 101

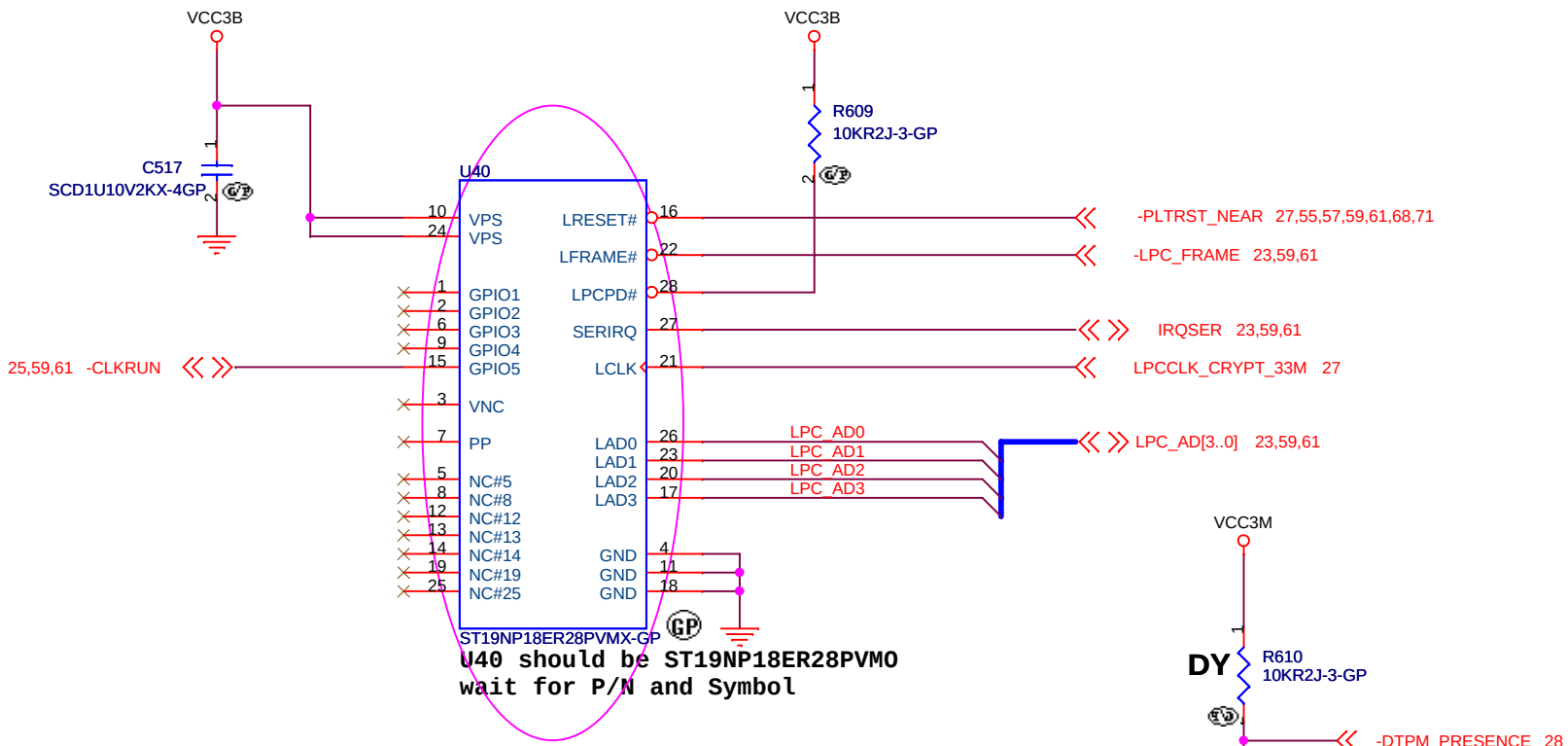

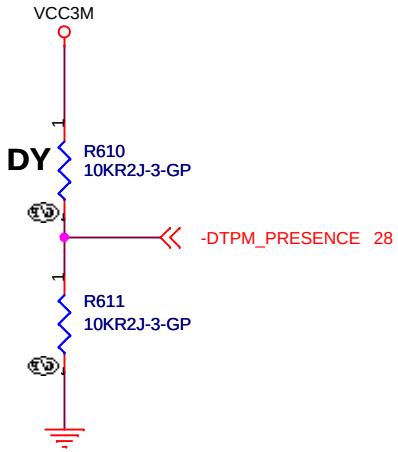

	NO TPM	ST Micro ST19NP18ER28PVMO
U40	DY	ASM
C517	DY	ASM
R609	DY	ASM
R610	ASM	DY
R611	DY	ASM

<Core Design>

緯創資通 **Wistron Corporation**
21F, 88, Sec.1, Hsin Tai Wu Rd., Hsichih,
Taipei Hsien 221, Taiwan, R.O.C.

Title: ***TPM***

Size: A4 | Document Number: **Dasher-1** | Rev: **SD**

Date: Monday, January 10, 2011 | Sheet 69 of 101

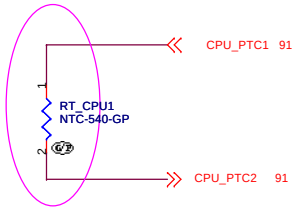

It should be arranged near CPU instead of CPU thermal sensor

Channel	Location
Local	MEMORY
Remote Diode 2	CPUCORE DC/DC
Remote Diode 3	Rear Cover (1R05B_VTT DC/DC)
Remote Diode 4	Base Cover (1R5A DC/DC)
Remote Diode 5	GFXCORE
Remote Diode 6	WWAN
Remote Diode 7	WLAN

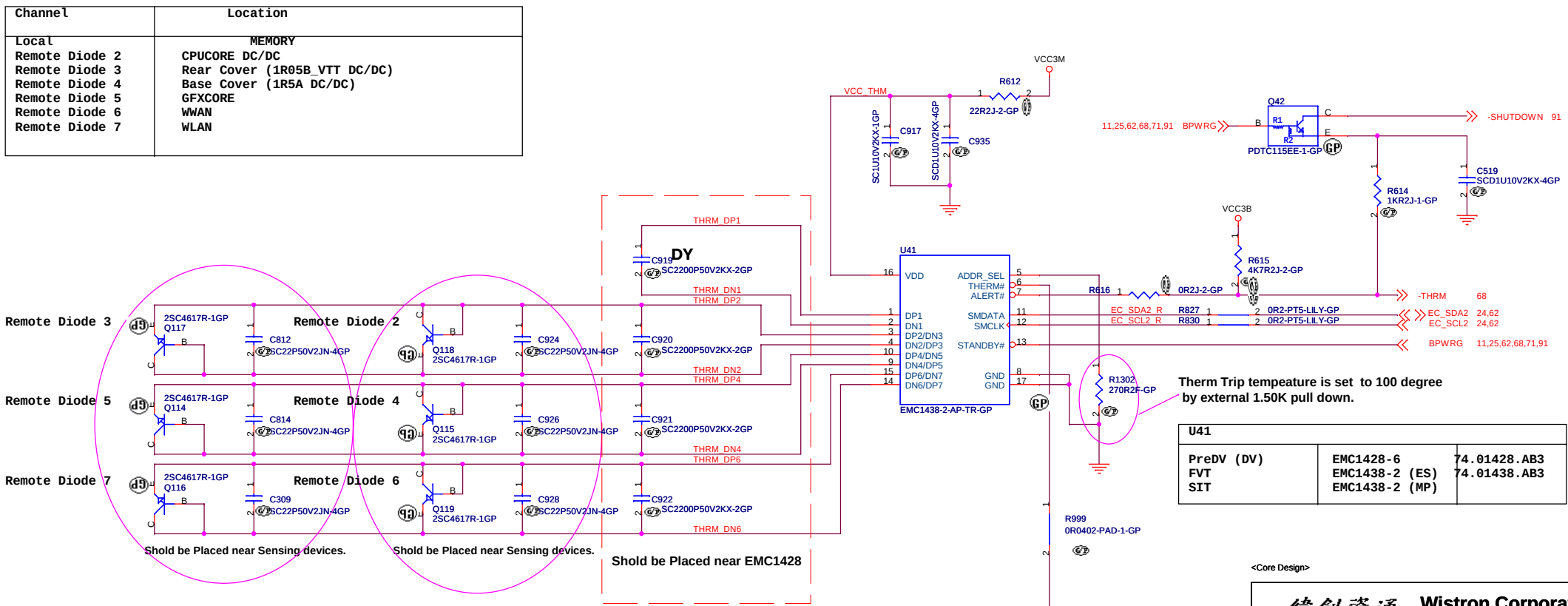

Therm Trip tempeature is set to 100 degree by external 1.50K pull down.

U41		
PreDV (DV)	EMC1428-6	74.01428.AB3
FVT	EMC1438-2 (ES)	74.01438.AB3
SIT	EMC1438-2 (MP)	

<Core Design>

緯創資通 Wistron Corporation
21F, 88, Sec.1, Hsin Tai Wu Rd., Hsichih,
Taipei Hsien 221, Taiwan, R.O.C.

Title: ***Thermel Sensor***

Size: A3 | Document Number: **Dasher-1** | Rev: **SD**

Date: Monday, January 10, 2011 | Sheet 70 of 101

EEPROM

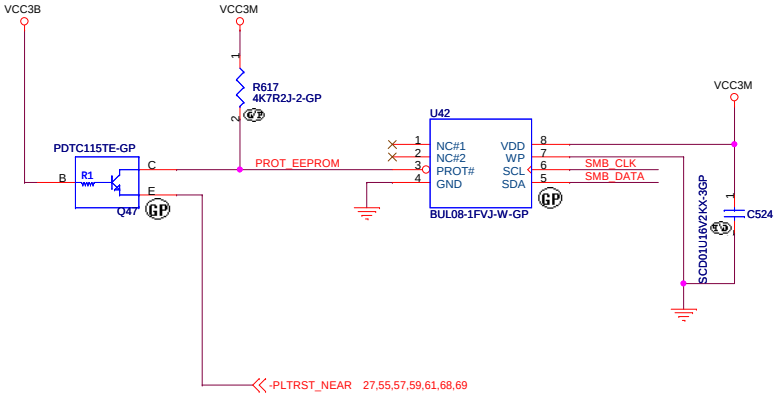

	Vendor	U42	Part Number
1st	ROHM	BUL08-1FVJ-W	72.BUL08.00Q
2nd	PHILIPS	PCA24S08ADP	72.24S08.A0Q
3rd	Sanyo	LE26CAP08TT	72.26C08.00R

CONSTANT SECURE	YES	NO
U66	ASM	DY
U67	ASM	DY
C864	ASM	DY
R978	ASM	DY
R929	ASM	DY
R901	ASM	DY
R930	ASM	DY
R536	DY	ASM
R539	DY	ASM

Logic

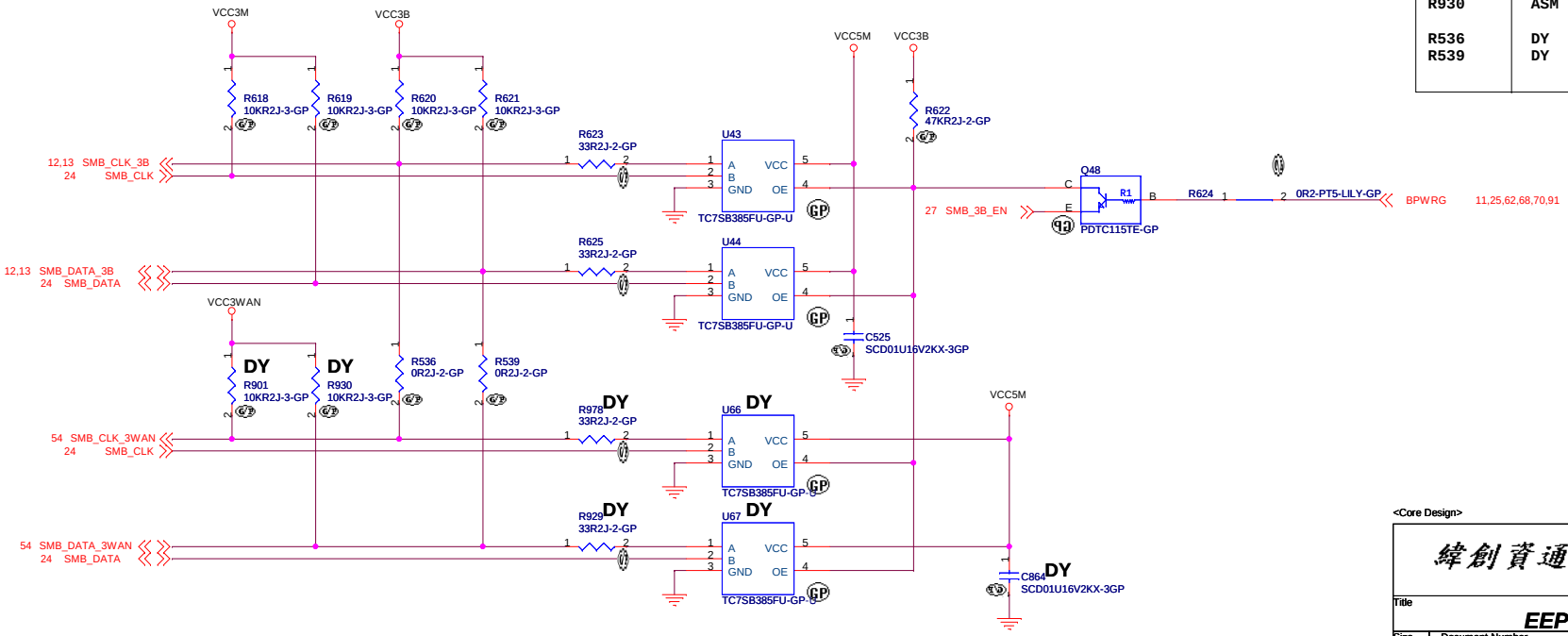

<Core Design>

Wistron Corporation
21F, 88, Sec.1, Hsin Tai Wu Rd., Hsichih,
Taipei Hsien 221, Taiwan, R.O.C.

Title: **EEPROM/SMBUS SW**

Size: Custom | Document Number: Dasher-1 | Rev: SD

Date: Monday, January 10, 2011 | Sheet 71 of 101

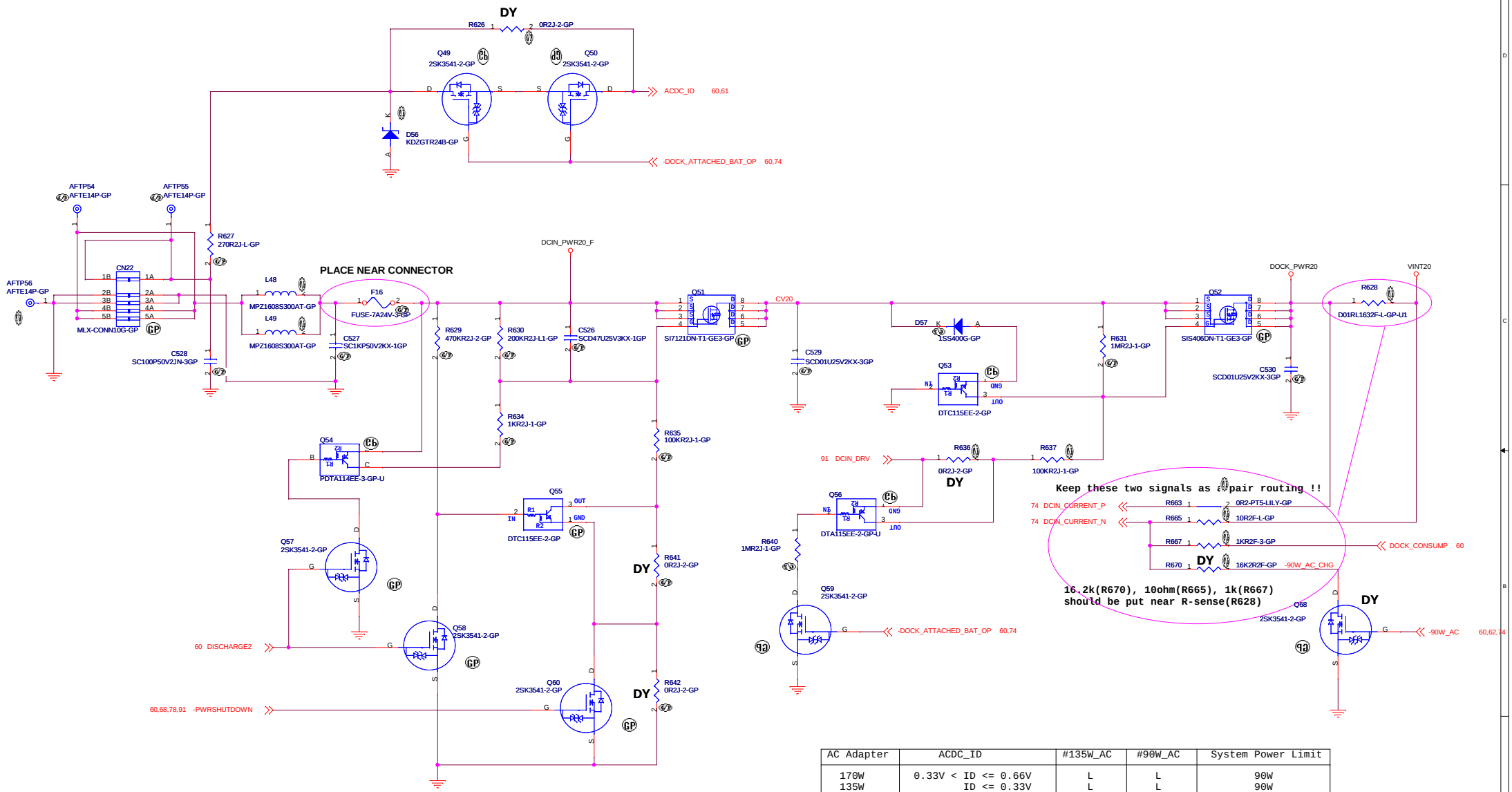

AC Adapter	ACDC_ID	#135W_AC	#90W_AC	System Power Limit
170W	0.33V < ID <= 0.66V	L	L	90W
135W	ID <= 0.33V	L	L	90W
90W	2.64V < ID	H	L	90W
65W	1.32V < ID <= 1.98V	H	H	65W

PEAK SHIFT	YES	NO
R641	NO-ASM	ASM
R629	ASM	NO-ASM
Q58	ASM	NO-ASM
Q55	ASM	NO-ASM

<Core Design>

緯創資通 **Wistron Corporation**
21F, 88, Sec.1, Hsin Tai Wu Rd., Hsichih,
Taipei Hsien 221, Taiwan, R.O.C.

Title: ***DC-IN***

Size: Custom | Document Number: **Dasher-1** | Rev: **SD**

Date: Monday, January 10, 2011 | Sheet 72 of 101

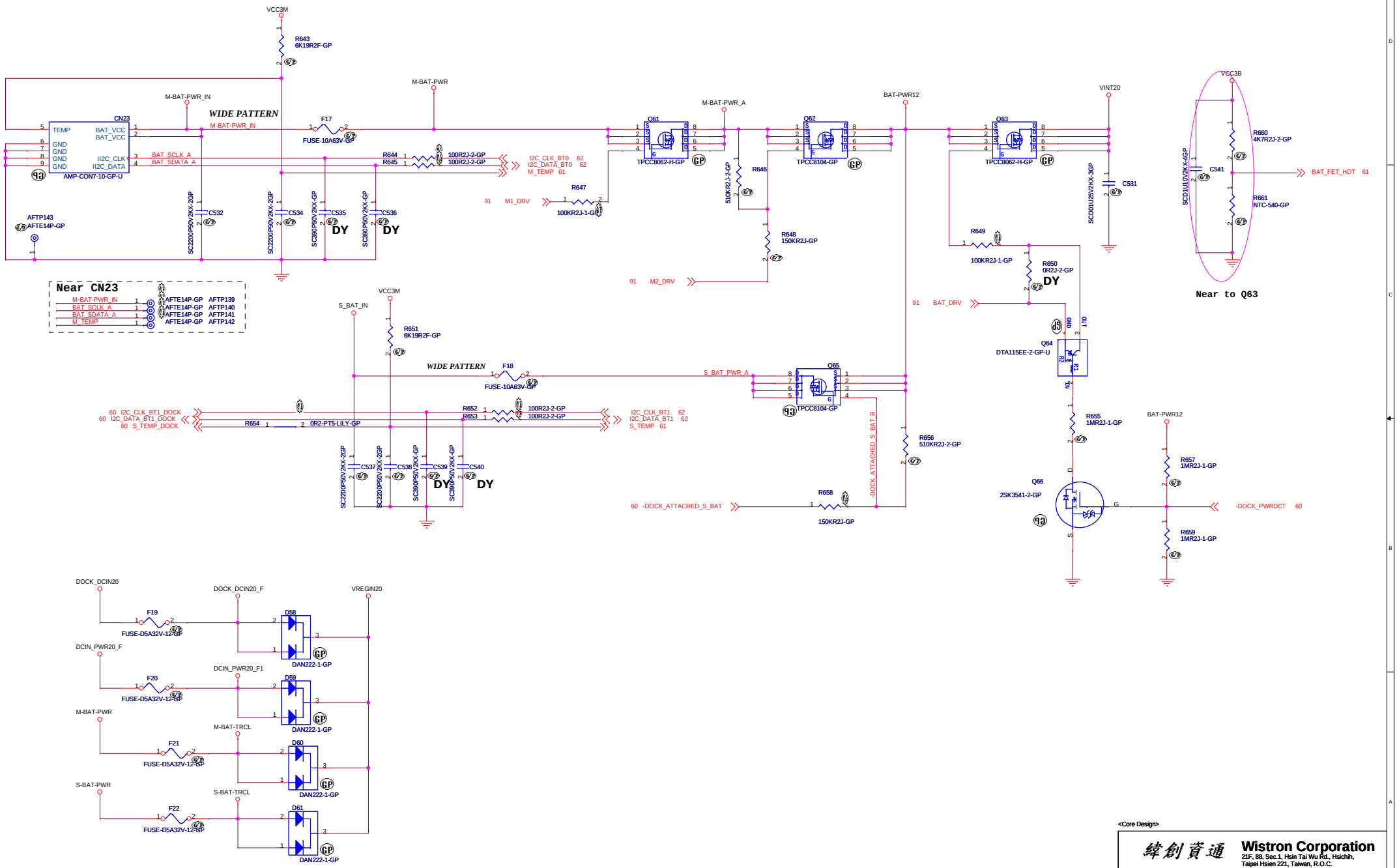

<Core Design>

Wistron Corporation
21F, 88, Sec.1, Hsin Tai Wu Rd., Hsichih,
Taipei Hsien 221, Taiwan, R.O.C.

Title: BATTERY INPUT

Size	Document Number	Rev
Custom	Dasher-1	SD

Date: Monday, January 10, 2011 Sheet 73 of 101

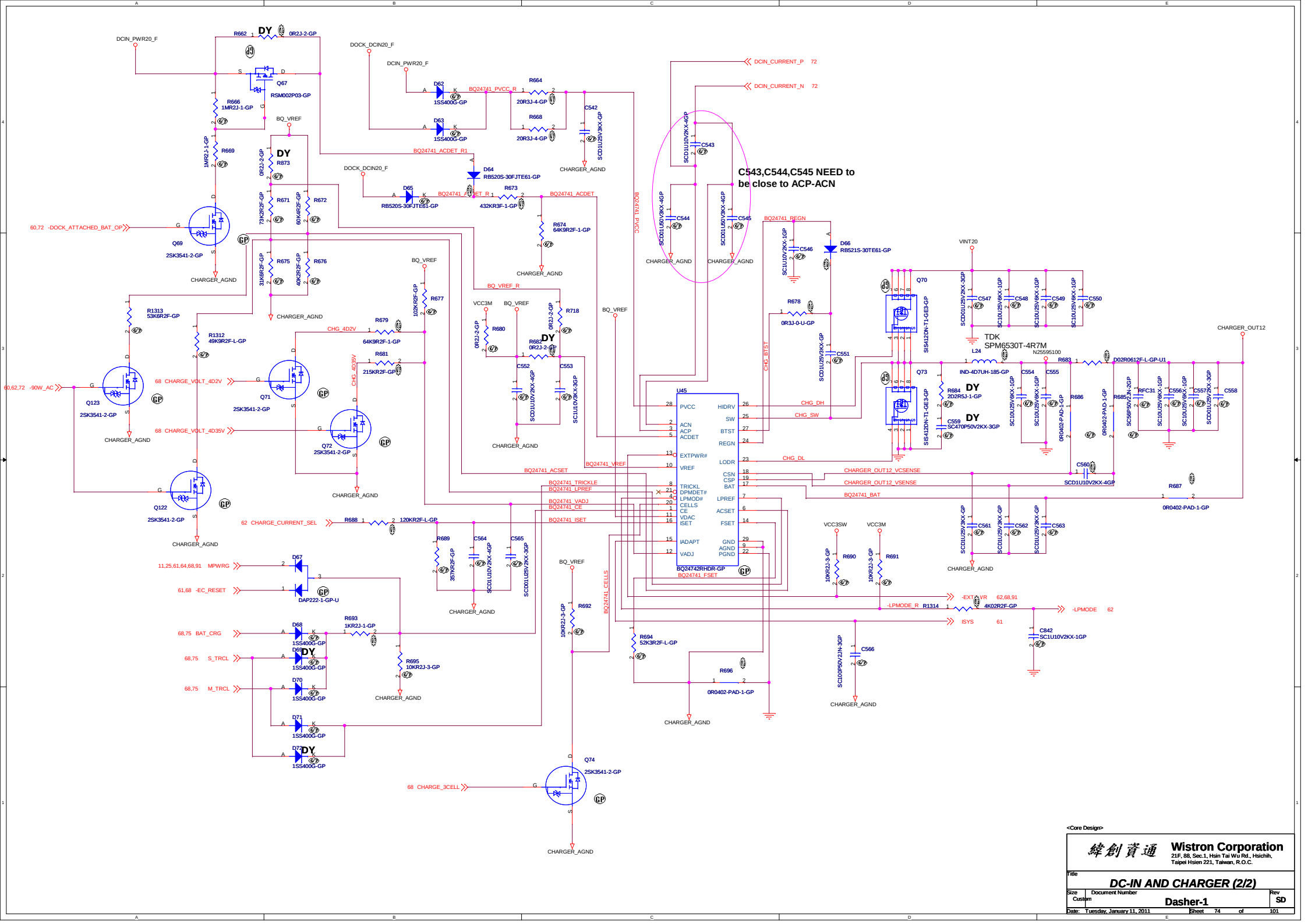

Wistron Corporation
21F, 88, Sec.1, Hsin Tai Wu Rd., Hsichih, Taipei Hsien 221, Taiwan, R.O.C.

Title: DC-IN AND CHARGER (2/2)

Size: Custom | Document Number: Dasher-1 | Rev: SD

Date: Tuesday, January 11, 2011 | Sheet 74 of 101

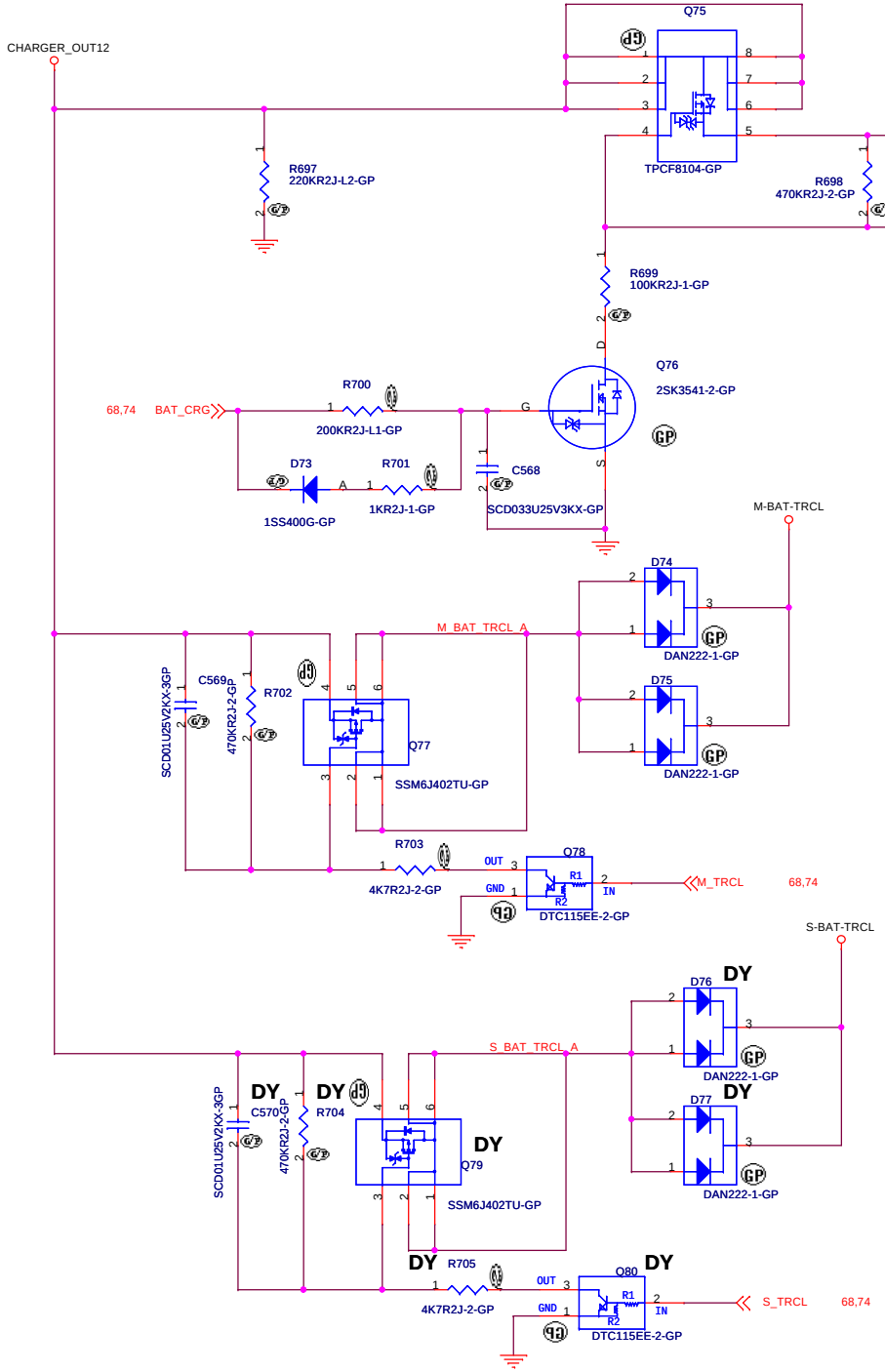

<Core Design>

緯創資通 **Wistron Corporation**
21F, 88, Sec.1, Hsin Tai Wu Rd., Hsichih,
Taipei Hsien 221, Taiwan, R.O.C.

Title: ***CHARGER SELECT***

Size	Document Number	Rev
A3	Dasher-1	SD

Date: Monday, January 10, 2011 Sheet 75 of 101

VOUT = 0.249 (VBAT - 5)

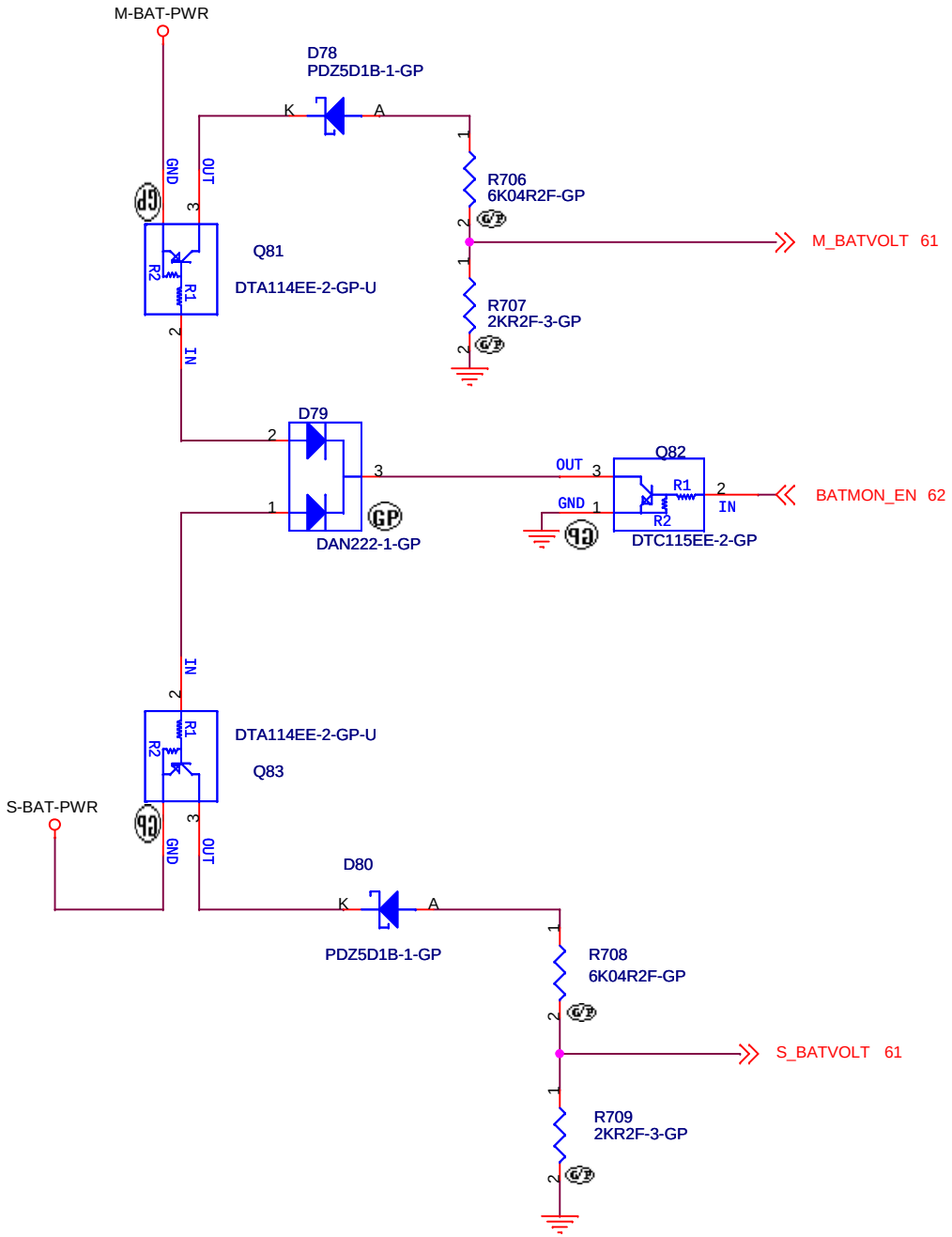

<Core Design>

緯創資通 **Wistron Corporation**
21F, 88, Sec.1, Hsin Tai Wu Rd., Hsichih,
Taipei Hsien 221, Taiwan, R.O.C.

Title: ***BATTERY MONITOR***

Size	Document Number	Rev
A4	**Dasher-1**	**SD**

Date: Monday, January 10, 2011 Sheet 76 of 101

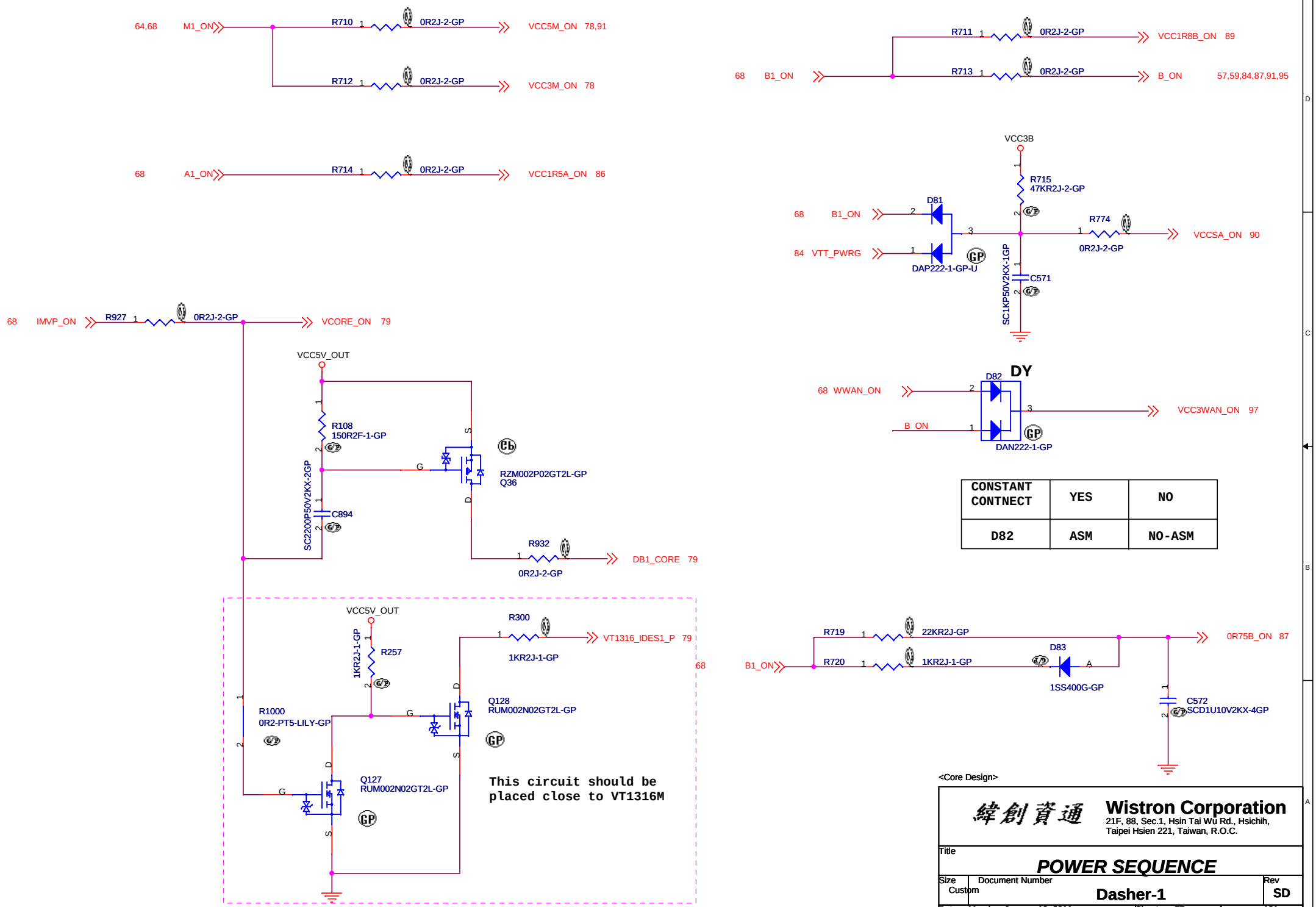

CONSTANT CONTNECT	YES	NO
D82	ASM	NO-ASM

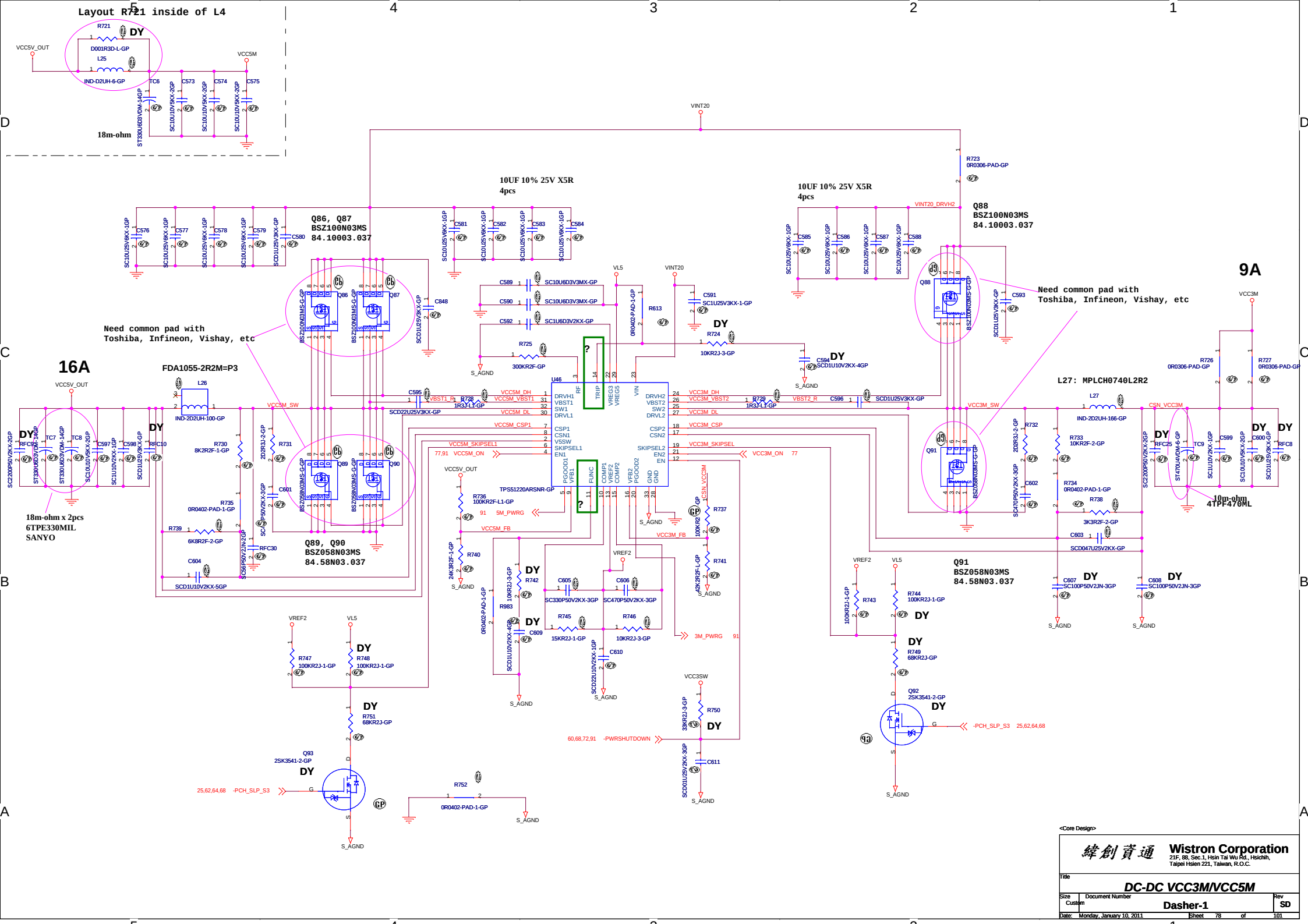
Layout R721 inside of L4
R721
DY
D001R3D-L-GP
L25
IND-D2UH-6-GP
VCC5V_OUT
VCC5M
TC6
C573
C574
C575
ST330U603VDM-14GP
SC10U10V5KX-2GP
18m-ohm
VINT20
10UF 10% 25V X5R
4pcs
Q86, Q87
BSZ100N03MS
84.10003.037
Q88
BSZ100N03MS
84.10003.037
Need common pad with
Toshiba, Infineon, Vishay, etc
16A
FDA1055-2R2M=P3
L26
IND-2D2UH-100-GP
VCC5V_OUT
VCC5M_SW
VCC5M_DH
VCC5M_VBST1
VCC5M_DL
VCC5M_CSP1
VCC5M_SKIPSEL1
77,91 VCC5M_ON
TPS51220ARSNR-GP
U46
VCC3M_DH
VCC3M_VBST2
VCC3M_DL
VCC3M_CSP
VCC3M_SKIPSEL
VCC3M_ON 77
VCC3M_SW
VBST1_R
VBST2_R
R728
1R3J-1-GP
R729
1R3J-1-GP
SCD22U25V3KX-GP
SCD1U25V3KX-GP
R723
0R0306-PAD-GP
R724
10KR2J-3-GP
R725
300KR2F-GP
R613
0R0402-PAD-1-GP
C594
SCD1U10V2KX-4GP
S_AGND
9A
VCC3M
L27: MPLCH0740L2R2
L27
IND-2D2UH-166-GP
CSN_VCC3M
R726
0R0306-PAD-GP
R727
0R0306-PAD-GP
10m-ohm
4TPF470ML
18m-ohm x 2pcs
6TPE330MIL
SANYO
R730
8K2R2F-1-GP
R731
2D2R3J-2-GP
R732
2D2R3J-2-GP
R733
10KR2F-2-GP
R734
0R0402-PAD-1-GP
R738
3K3R2F-2-GP
C603
SCD047U25V2KX-GP
R735
0R0402-PAD-1-GP
R739
6K8R2F-2-GP
C604
SCD1U10V2KX-5GP
Q89, Q90
BSZ058N03MS
84.58N03.037
Q91
BSZ058N03MS
84.58N03.037
R736
100KR2F-L1-GP
91 5M_PWRG
VCC5M_FB
VCC3M_FB
R737
100KR2J-1-GP
R740
24K3R2F-1-GP
R741
2K2R2F-1-GP
R742
10KR2J-3-GP
R983
0R0402-PAD-1-GP
C605
SC330P50V2KX-3GP
C606
SC470P50V2KX-3GP
C609
SCD1U10V2KX-4GP
R745
15KR2J-1-GP
R746
10KR2J-3-GP
C610
SCD22U10V2KX-1GP
3M_PWRG 91
VREF2
VL5
R747
100KR2J-1-GP
R748
100KR2J-1-GP
R751
68KR2J-GP
Q93
2SK3541-2-GP
25,62,64,68 -PCH_SLP_S3
R752
0R0402-PAD-1-GP
VCC3SW
R750
33KR2J-3-GP
C611
SCD01U25V2KX-3GP
60,68,72,91 -PWRSHUTDOWN
R743
100KR2J-1-GP
R744
100KR2J-1-GP
R749
68KR2J-GP
Q92
2SK3541-2-GP
-PCH_SLP_S3 25,62,64,68
C607
SC100P50V2JN-3GP
C608
SC100P50V2JN-3GP
C599
C600
RFC8
RFC25
TC9
ST470U4VDM-6-GP
SC470P50V2KX-3GP
SC2200P50V2KX-3GP
SC1U10V2KX-1GP
SC1U10V5KX-3GP
SCD1U25V3KX-GP
SCD1U25V3KX-1GP
SC10U25V6KX-1GP
SCD1U25V3KX-GP
SC10U6D3V3MX-GP
SC1U6D3V2KX-GP
SC1U25V3KX-1GP
BSZ100N03MS-G-GP
BSZ058N03MS-G-GP
BSZ150N03MS-G-GP
Q88
Q91
Q92
Q93
Wistron Corporation
21F, 88, Sec.1, Hsin Tai Wu Rd., Hsichih,
Taipei Hsien 221, Taiwan, R.O.C.
Title
DC-DC VCC3M/VCC5M
Size
Custom
Document Number
Dasher-1
Rev
SD
Date: Monday, January 10, 2011
Sheet 78 of 101

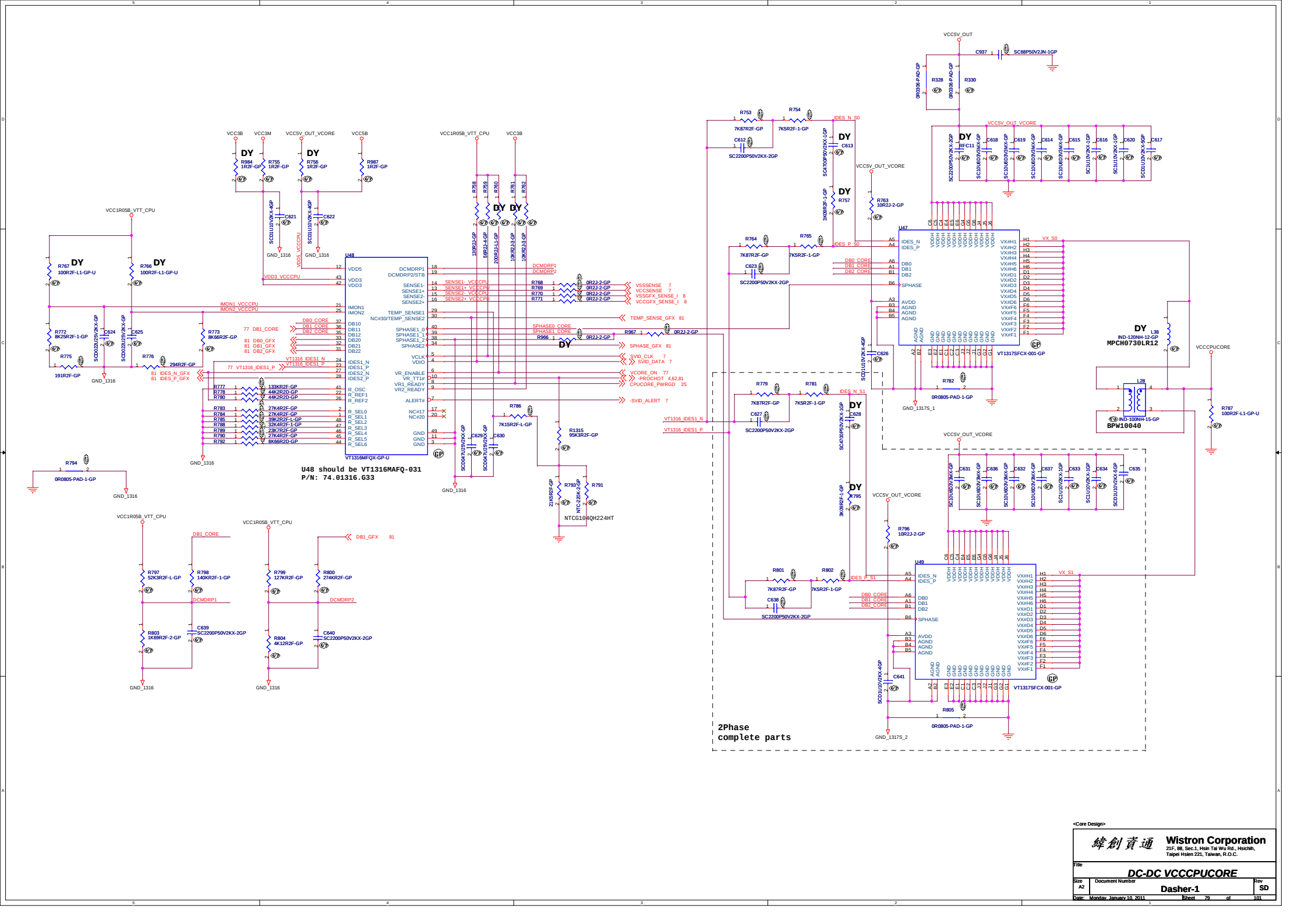

<Core Design>

緯創資通 Wistron Corporation
21F, 88, Sec.1, Hsin Tai Wu Rd., Hsichih,
Taipei Hsien 221, Taiwan, R.O.C.

Title: DC-DC VCCCPUCORE

Size	Document Number	Rev
A2	Dasher-1	SD

Date: Monday, January 10, 2011 Sheet 79 of 101

CPU/GFXCORE Table

CPU	SV 2Phase(53A)		LV 2Phase(43A)	ULV 1Phase(33A)	Remark
GFX	GT1(24A)	GT2(33A)	GT2(33A)	GT2(33A)	
U47	VT1317S	VT1317S	VT1314S	VT1317S	Slave IC
U49	VT1317S	VT1317S	VT1314S	NO_ASM	
R966	NO_ASM	NO_ASM	NO_ASM	0	Phase
R967	0	0	0	NO_ASM	
L38	NO_ASM	NO_ASM	NO_ASM	ASM	Inductor
L28	ASM	ASM	ASM	NO_ASM	
R783	27.4k	27.4k	39.2k	20.8k	R_SEL0
R784	27.4k	27.4k	6.57k	27.4k	R_SEL1
R785	39.2k	39.2k	39.2k	39.2k	R_SEL2
R788	27.4k	32.4k	32.4k	32.4k	R_SEL3
R789	11.4k(0.5%)	23.7k(1%)	23.7k(1%)	23.7k(1%)	R_SEL4
R790	27.4k	27.4k	27.4k	27.4k	R_SEL5
R792	8.66k(0.5%)	8.66k(0.5%)	8.66k(0.5%)	8.66k(0.5%)	R_SEL6
R779	7.87k	7.87k	7.87k	NO_ASM	RDES #2
C627	1000pF	1000pF	1000pF	NO_ASM	
R781	7.68k	7.68k	7.68k	NO_ASM	
R801	7.87k	7.87k	7.87k	NO_ASM	
C638	1000pF	1000pF	1000pF	NO_ASM	
R802	7.68k	7.68k	7.68k	NO_ASM	
C628	4700pF	4700pF	4700pF	NO_ASM	
R795	3.09k	3.09k	3.09k	NO_ASM	
R772	8.25k	8.25k	10.5k	8.06k	IMON1
R775	191	191	165	383	
R773	8.87k	8.66k	8.66k	8.66k	IMON2
R776	178	294	294	294	
R798	140k	140k	255k	221k	DCMDR1
R803	1.69k	1.69k	3.57k	3.16k	
R797	52.3k	52.3k	110k	97.6k	
R800	316k	274k	274k	274k	DCMDR1(prs)
R804	4.99k	4.12k	4.12k	4.12k	(drp)
R799	154k	127k	127k	127k	(ofs)
C631	10uF	10uF	10uF	NO_ASM	CIN
C636	10uF	10uF	10uF	NO_ASM	
C633	1uF	1uF	1uF	NO_ASM	
C634	1uF	1uF	1uF	NO_ASM	
C635	0.1uF	0.1uF	0.1uF	NO_ASM	
C632	10uF	10uF	10uF	NO_ASM	
C637	10uF	10uF	10uF	NO_ASM	
R796	10	10	10	NO_ASM	AVDD
C641	0.1uF	0.1uF	0.1uF	NO_ASM	
R805	0	0	0	NO_ASM	
C684	2.2uF	2.2uF	10uF	10uF	Coutput(1603)
C685	22uF	22uF	10uF	22uF	
C686	22uF	22uF	NO_ASM	22uF	
C687	22uF	22uF	NO_ASM	22uF	
C688	2.2uF	2.2uF	10uF	10uF	
C689	22uF	22uF	NO_ASM	22uF	
C690	22uF	22uF	10uF	22uF	
C691	22uF	22uF	NO_ASM	22uF	
C692	2.2uF	2.2uF	10uF	10uF	
C693	22uF	22uF	10uF	10uF	
C694	22uF	22uF	10uF	22uF	
C695	22uF	22uF	NO_ASM	22uF	
C696	22uF	22uF	10uF	22uF	
C697	22uF	22uF	10uF	22uF	
C698	2.2uF	2.2uF	10uF	10uF	
U50	VT1314S	VT1317S	VT1317S	VT1317S	Slave IC
R806	3.4k	3.16k	3.16k	3.16k	RDES G
C653	2700pF	2700pF	2700pF	2700pF	
R807	12.4k	11.5k	11.5k	11.5k	
R810	3.4k	3.16k	3.16k	3.16k	
C662	2700pF	2700pF	2700pF	2700pF	
R811	12.4k	11.5k	11.5k	11.5k	
C654	4700pF	4700pF	4700pF	4700pF	
R808	3.09k	3.09k	3.09k	3.09k	
C642	22uF	22uF	22uF	22uF	Coutput
C643	22uF	22uF	22uF	22uF	
C644	22uF	22uF	22uF	22uF	
C645	22uF	22uF	22uF	22uF	
C646	22uF	22uF	22uF	22uF	
C647	22uF	22uF	22uF	22uF	
C648	22uF	22uF	22uF	22uF	
C649	22uF	22uF	22uF	22uF	
C650	22uF	22uF	22uF	22uF	
C651	22uF	22uF	22uF	22uF	
C652	22uF	22uF	22uF	22uF	
C663	22uF	22uF	22uF	22uF	
C664	22uF	22uF	22uF	22uF	
C665	22uF	22uF	22uF	22uF	
C666	22uF	22uF	22uF	22uF	
C667	22uF	22uF	22uF	22uF	
C20	10uF	22uF	22uF	22uF	Coutput
C21	10uF	10uF	10uF	10uF	CPU side
C22	10uF	22uF	22uF	22uF	
C23	10uF	22uF	22uF	22uF	
C933	10uF	22uF	22uF	22uF	
C934	10uF	10uF	10uF	10uF	

CPU	SV 2Phase(53A)		LV 2Phase(43A)	ULV 1Phase(33A)	Remark
R754	7.5k	7.5k	7.5k	6.98k	IDES (CPU)
R765	7.5k	7.5k	7.5k	6.98k	
R781	7.5k	7.5k	7.5k	NO_ASM	
R802	7.5k	7.5k	7.5k	NO_ASM	
R806	3.16k	3.16k	3.16k	6.2k	IDES (GFX)
R810	3.16k	3.16k	3.16k	6.2k	
R807	11.3k	11.3k	11.3k	8.06k	
R811	11.3k	11.3k	11.3k	8.06k	
C654	4700pF	4700pF	4700pF	NO_ASM	
R808	3.09k	3.09k	3.09k	NO_ASM	

<Core Design>

緯創資通 Wistron Corporation
21F, 88, Sec.1, Hsin Tai Wu Rd., Hsichih,
Taipei Hsien 221, Taiwan, R.O.C.

Title: DC-DC VCCCPUCORE

Size	Document Number	Rev
A2	Dasher-1	SD

Date: Monday, January 10, 2011 Sheet 80 of 101

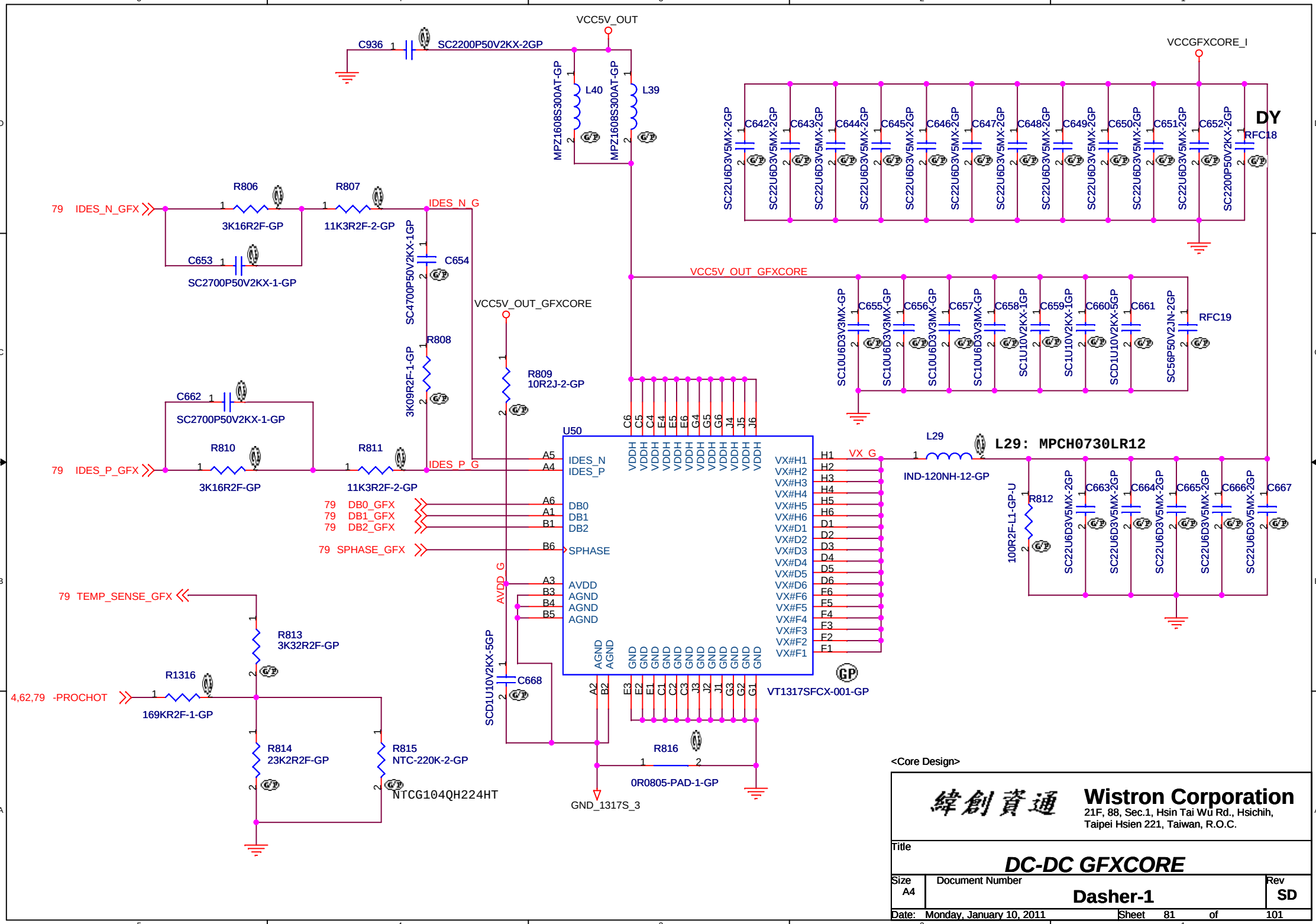
VCC5V_OUT
C936
SC2200P50V2KX-2GP
MPZ1608S300AT-GP
L40
L39
VCCGFXCORE_I
C642
C643
C644
C645
C646
C647
C648
C649
C650
C651
C652
SC22U6D3V5MX-2GP
SC2200P50V2KX-2GP
RFC18
DY
79 IDES_N_GFX
R806
3K16R2F-GP
R807
11K3R2F-2-GP
IDES_N_G
C653
SC2700P50V2KX-1-GP
C654
SC470P50V2KX-1GP
VCC5V_OUT_GFXCORE
R808
3K09R2F-1-GP
R809
10R2J-2-GP
C662
SC2700P50V2KX-1-GP
R810
3K16R2F-GP
R811
11K3R2F-2-GP
79 IDES_P_GFX
IDES_P_G
U50
IDES_N
IDES_P
DB0
DB1
DB2
SPHASE
AVDD
AGND
VDDH
GND
VX#H1
VX#H2
VX#H3
VX#H4
VX#H5
VX#H6
VX#D1
VX#D2
VX#D3
VX#D4
VX#D5
VX#D6
VX#F6
VX#F5
VX#F4
VX#F3
VX#F2
VX#F1
VT1317SFCX-001-GP
79 DB0_GFX
79 DB1_GFX
79 DB2_GFX
79 SPHASE_GFX
AVDD_G
VX_G
L29
IND-120NH-12-GP
L29: MPCH0730LR12
R812
100R2F-L1-GP-U
C663
C664
C665
C666
C667
SC22U6D3V5MX-2GP
C655
C656
C657
C658
C659
C660
C661
RFC19
SC10U6D3V3MX-GP
SC1U10V2KX-1GP
SC1U10V2KX-5GP
SCD1U10V2KX-5GP
SC56P50V2JN-2GP
79 TEMP_SENSE_GFX
R813
3K32R2F-GP
R1316
169KR2F-1-GP
4,62,79 -PROCHOT
R814
23K2R2F-GP
R815
NTC-220K-2-GP
NTCG104QH224HT
C668
R816
0R0805-PAD-1-GP
GND_1317S_3
<Core Design>
Wistron Corporation
21F, 88, Sec.1, Hsin Tai Wu Rd., Hsichih,
Taipei Hsien 221, Taiwan, R.O.C.
Title
DC-DC GFXCORE
Size
A4
Document Number
Dasher-1
Rev
SD
Date: Monday, January 10, 2011
Sheet 81 of 101

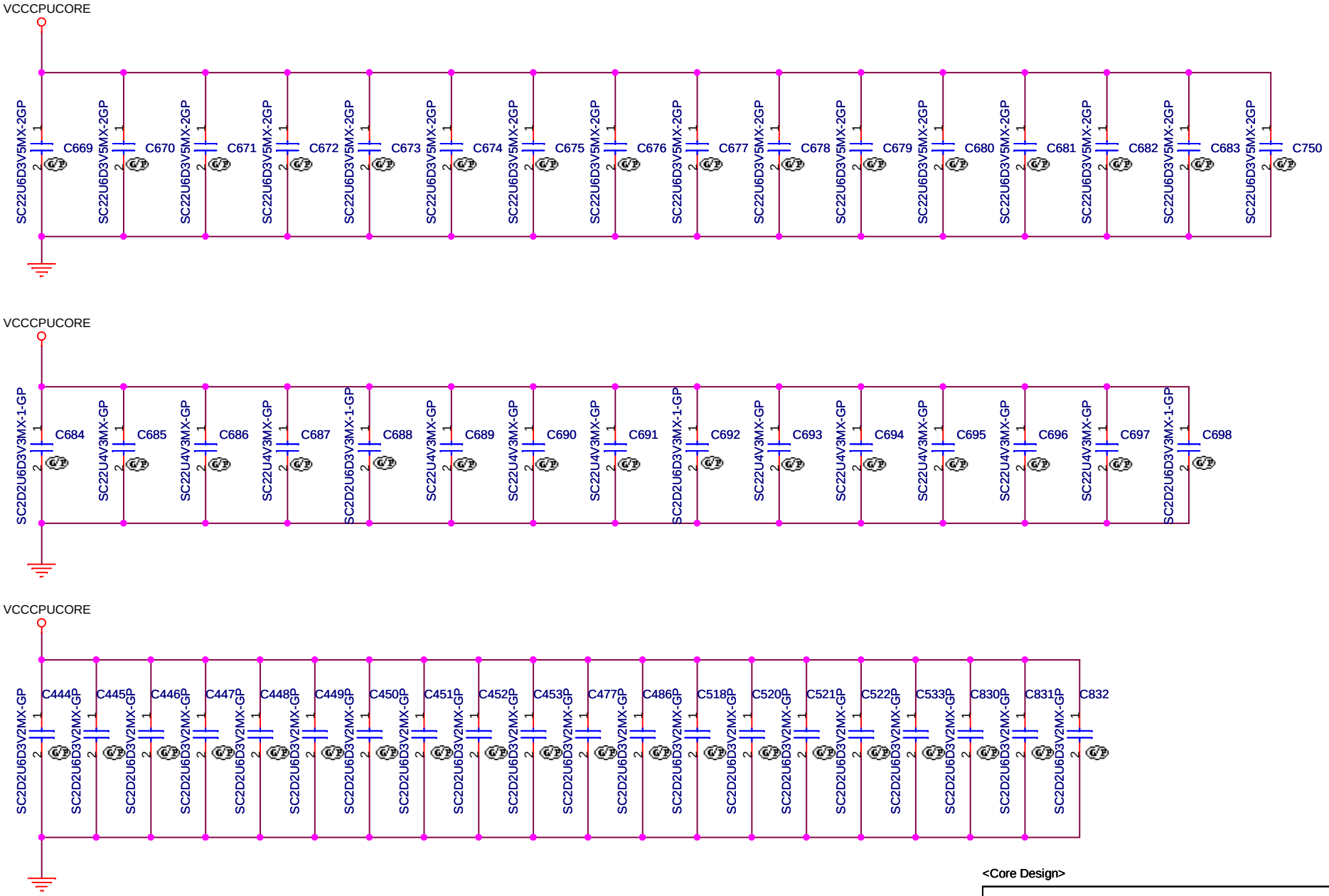

<Core Design>

緯創資通 **Wistron Corporation**
21F, 88, Sec.1, Hsin Tai Wu Rd., Hsichih,
Taipei Hsien 221, Taiwan, R.O.C.

Title: ***DC-DC VCCCPUCORE***

Size	Document Number	Rev
A4	**Dasher-1**	**SD**

Date: Monday, January 10, 2011 Sheet 82 of 101

B

L

A

N

<Core Design>

緯創資通 **Wistron Corporation**
21F, 88, Sec.1, Hsin Tai Wu Rd., Hsichih,
Taipei Hsien 221, Taiwan, R.O.C.

Title	***BLANK***	
Size A4	Document Number **Dasher-1**	Rev **SD**
Date: Monday, January 10, 2011	Sheet 83 of 101	

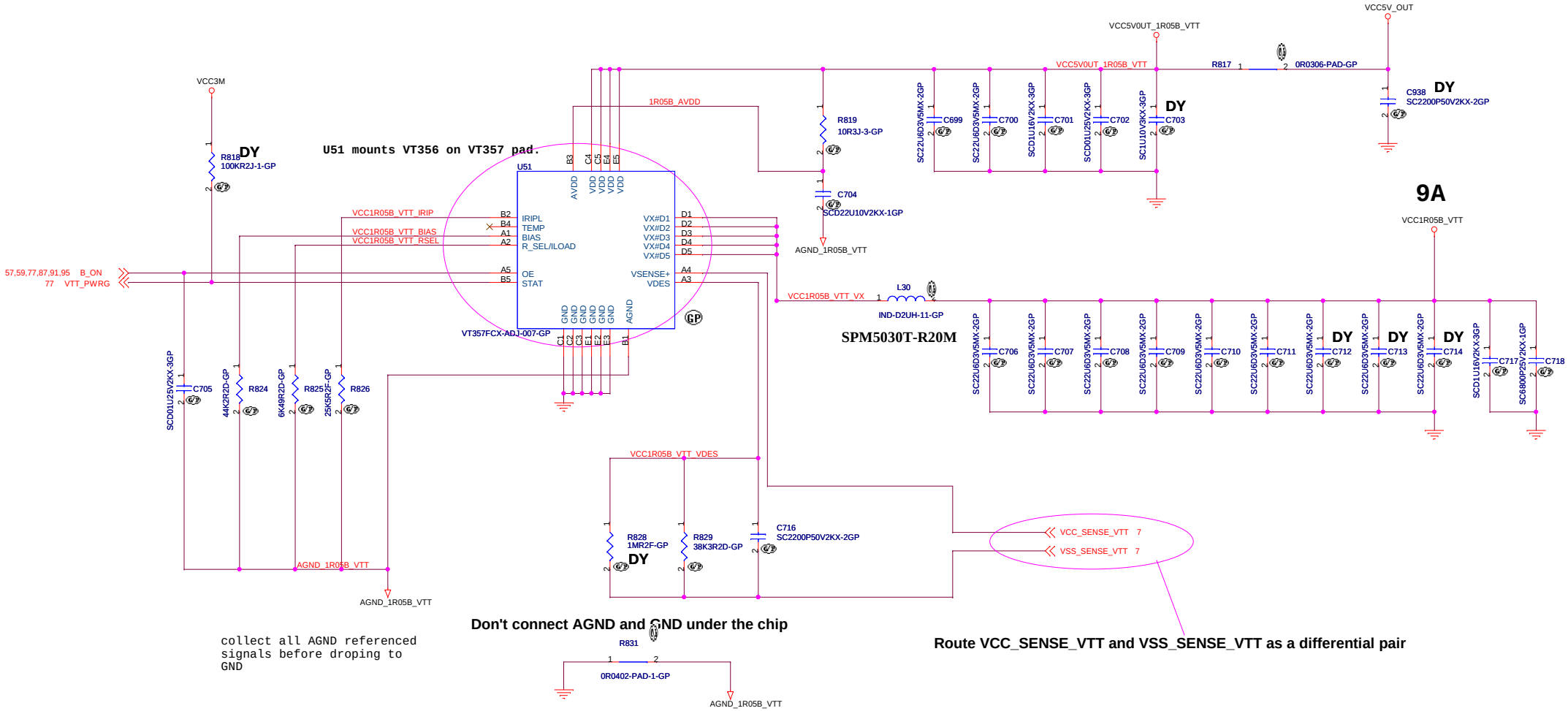

collect all AGND referenced signals before droping to GND

<Core Design>

Wistron Corporation
21F, 88, Sec.1, Hsin Tai Wu Rd., Hsichih, Taipei Hsien 221, Taiwan, R.O.C.

Title: DC-DC VCC1R05B_VTT

Size: Custom | Document Number: Dasher-1 | Rev: SD

Date: Monday, January 10, 2011 | Sheet 84 of 101

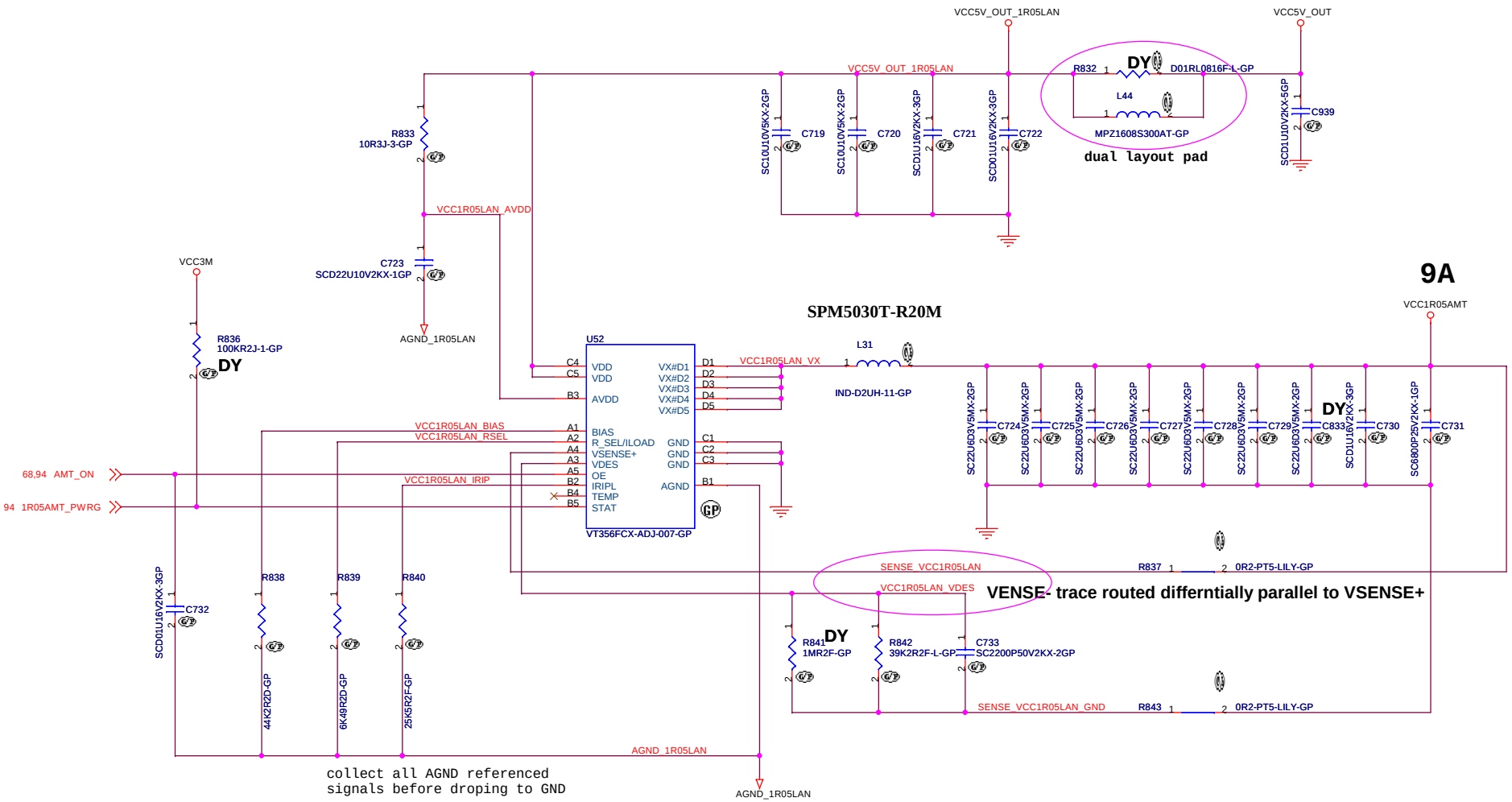

Don't connect AGND and GND under the chip

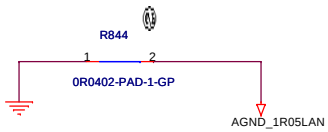

<Core Design>

緯創資通 **Wistron Corporation**
21F, 88, Sec.1, Hsin Tai Wu Rd., Hsichih,
Taipei Hsien 221, Taiwan, R.O.C.

Title: ***DC-DC VCC1R05AMT***

Size	Document Number	Rev
A3	Dasher-1	SD

Date: Monday, January 10, 2011 Sheet 85 of 101

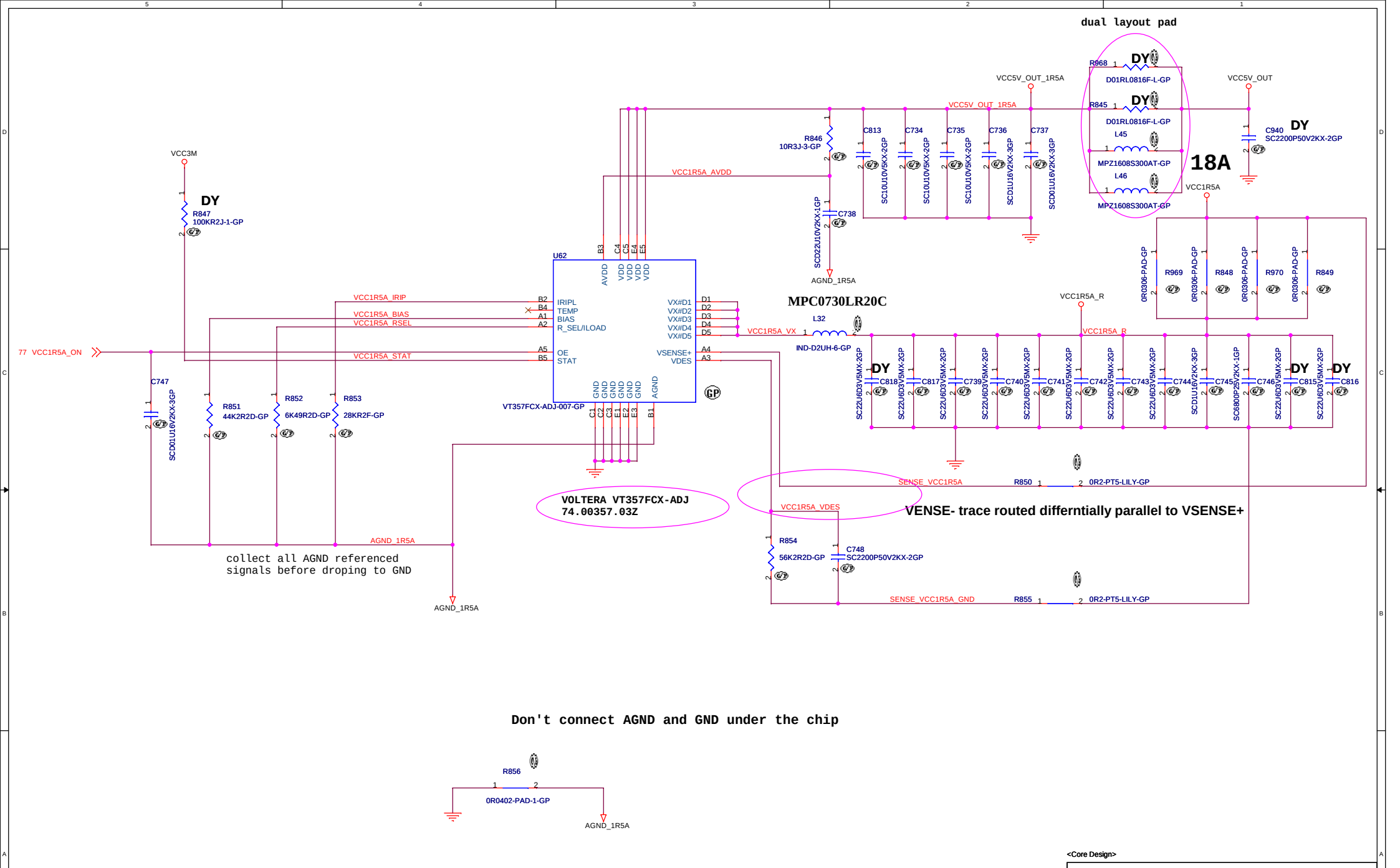

<Core Design>

緯創資通	**Wistron Corporation** 21F, 88, Sec.1, Hsin Tai Wu Rd., Hsichih, Taipei Hsien 221, Taiwan, R.O.C.
Title	***DC-DC VCC1R5A***
Size A3	Document Number **Dasher-1** Rev **SD**
Date: Monday, January 10, 2011	Sheet 86 of 101

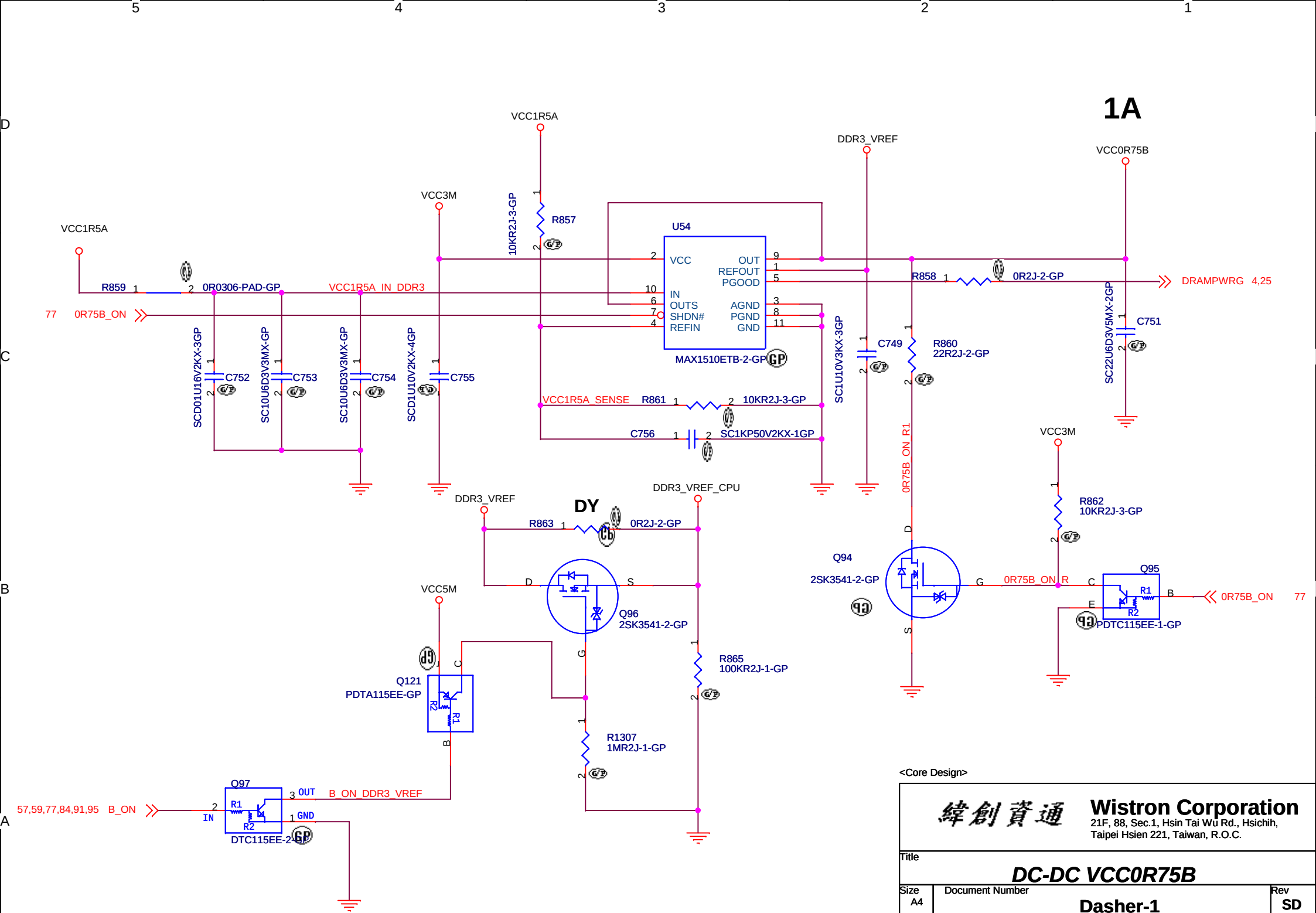

<Core Design>

Wistron Corporation
21F, 88, Sec.1, Hsin Tai Wu Rd., Hsichih,
Taipei Hsien 221, Taiwan, R.O.C.

Title: ***DC-DC VCC0R75B***

Size	Document Number	Rev
A4	**Dasher-1**	**SD**

Date: Monday, January 10, 2011 Sheet 87 of 101

BLANK

<Core Design>

緯創資通	**Wistron Corporation** 21F, 88, Sec.1, Hsin Tai Wu Rd., Hsichih, Taipei Hsien 221, Taiwan, R.O.C.	
Title	***BLANK***	
Size A4	Document Number **Dasher-1**	Rev **SD**
Date: Monday, January 10, 2011	Sheet 88 of 101	

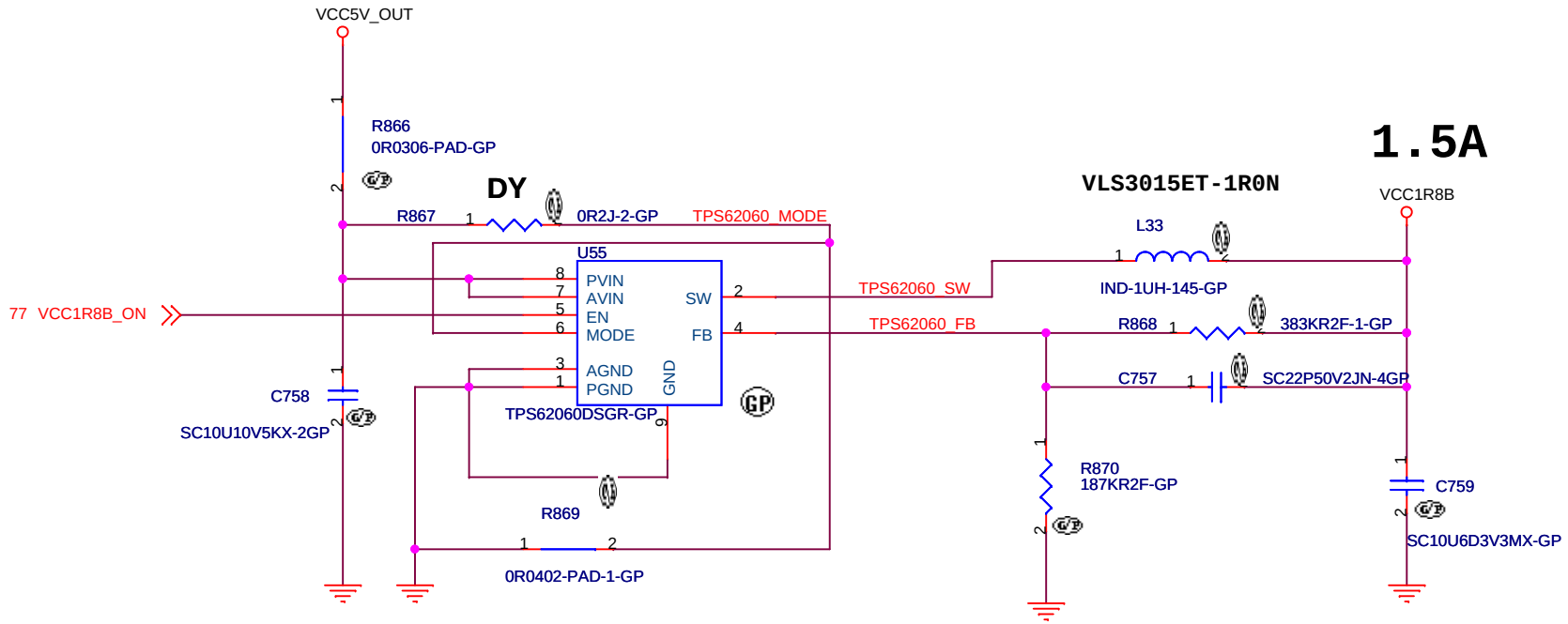

<Core Design>

緯創資通 **Wistron Corporation**
21F, 88, Sec.1, Hsin Tai Wu Rd., Hsichih,
Taipei Hsien 221, Taiwan, R.O.C.

Title: ***DC-DC VCC1R8B***

Size	Document Number	Rev
A4	**Dasher-1**	**SD**

Date: Monday, January 10, 2011 Sheet 89 of 101

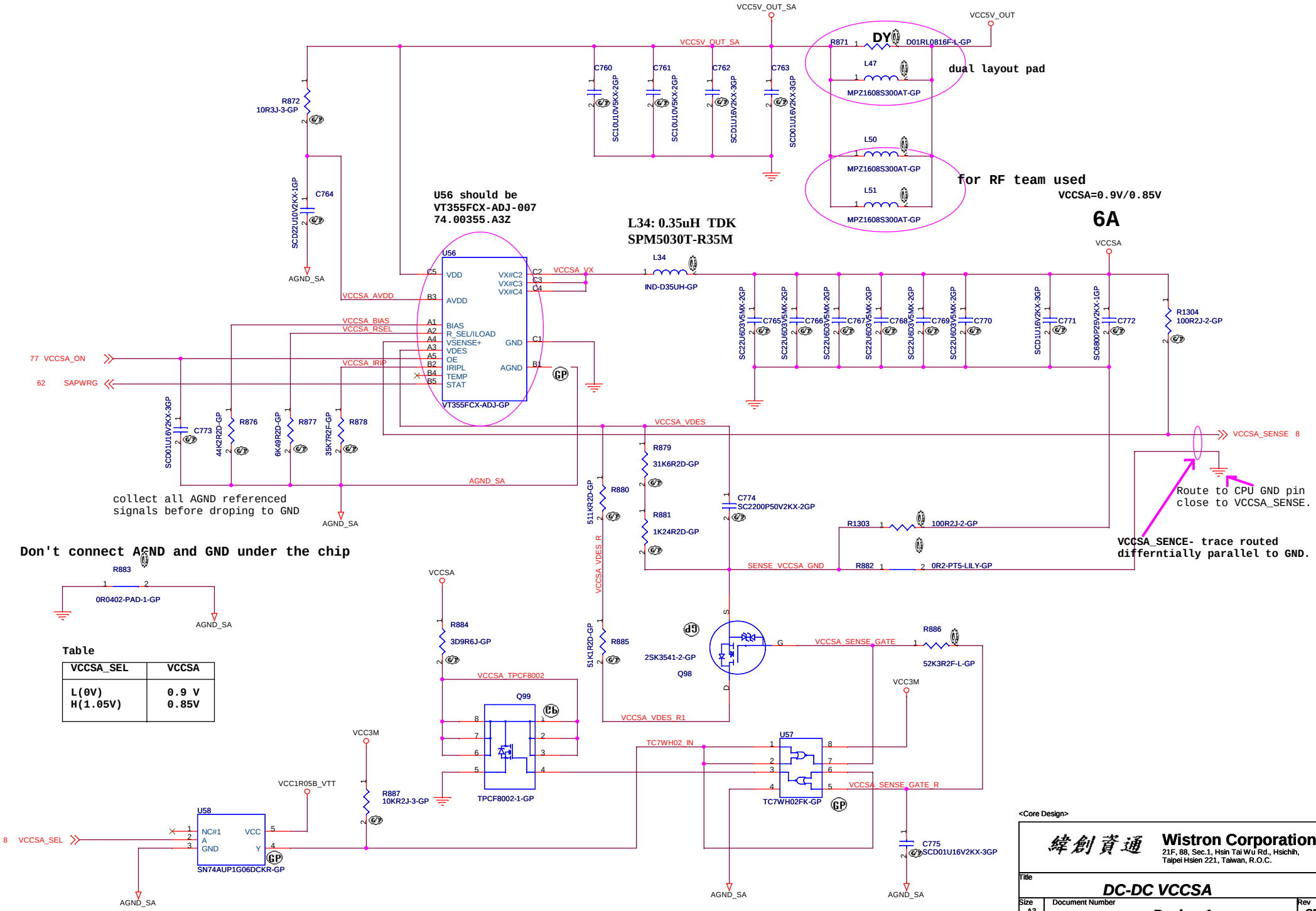
VCC5V_OUT_SA
VCC5V_OUT
R871
DY
D01RL0816F-L-GP
L47
MPZ1608S300AT-GP
dual layout pad
L50
MPZ1608S300AT-GP
L51
MPZ1608S300AT-GP
for RF team used
VCCSA=0.9V/0.85V
6A
C760
SC10U10V5KX-2GP
C761
SC10U10V5KX-2GP
C762
SCD1U16V2KX-3GP
C763
SCD01U16V2KX-3GP
R872
10R3J-3-GP
C764
SCD22U10V2KX-1GP
AGND_SA
U56 should be
VT355FCX-ADJ-007
74.00355.A3Z
L34: 0.35uH TDK
SPM5030T-R35M
U56
VDD
AVDD
BIAS
R_SEL/ILOAD
VSENSE+
VDES
OE
IRIPL
TEMP
STAT
VX#C2
VX#C3
VX#C4
GND
AGND
VT355FCX-ADJ-GP
VCCSA_VX
L34
IND-D35UH-GP
VCCSA
VCCSA_AVDD
VCCSA_BIAS
VCCSA_RSEL
VCCSA_IRIP
77 VCCSA_ON
62 SAPWRG
C765
C766
C767
C768
C769
C770
C771
C772
SC22U6D3V5MX-2GP
SCD1U16V2KX-3GP
SC680P25V2KX-1GP
R1304
100R2J-2-GP
C773
SCD01U16V2KX-3GP
R876
44K2R2D-GP
R877
6K49R2D-GP
R878
35K7R2F-GP
VCCSA_VDES
R879
31K6R2D-GP
R880
511KR2D-GP
R881
1K24R2D-GP
C774
SC2200P50V2KX-2GP
VCCSA_VDES_R
R885
51K1R2D-GP
VCCSA_VDES_R1
VCCSA_SENSE 8
R1303
100R2J-2-GP
R882
0R2-PT5-LILY-GP
SENSE_VCCSA_GND
Route to CPU GND pin
close to VCCSA_SENSE.
VCCSA_SENCE- trace routed
differntially parallel to GND.
collect all AGND referenced
signals before droping to GND
Don't connect AGND and GND under the chip
R883
0R0402-PAD-1-GP
AGND_SA
VCCSA
R884
3D9R6J-GP
VCCSA_TPCF8002
Q99
TPCF8002-1-GP
2SK3541-2-GP
Q98
VCCSA_SENSE_GATE
R886
52K3R2F-L-GP
VCC3M
TC7WH02_IN
U57
TC7WH02FK-GP
VCCSA_SENSE_GATE_R
VCC3M
R887
10KR2J-3-GP
VCC1R05B_VTT
U58
NC#1
A
GND
VCC
Y
SN74AUP1G06DCKR-GP
8 VCCSA_SEL
C775
SCD01U16V2KX-3GP
AGND_SA
AGND_SA
AGND_SA
Table
VCCSA_SEL
VCCSA
L(0V)
H(1.05V)
0.9 V
0.85V
<Core Design>
緯創資通
Wistron Corporation
21F, 88, Sec.1, Hsin Tai Wu Rd., Hsichih,
Taipei Hsien 221, Taiwan, R.O.C.
Title
DC-DC VCCSA
Size
A3
Document Number
Dasher-1
Rev
SD
Date: Monday, January 10, 2011
Sheet 90 of 101

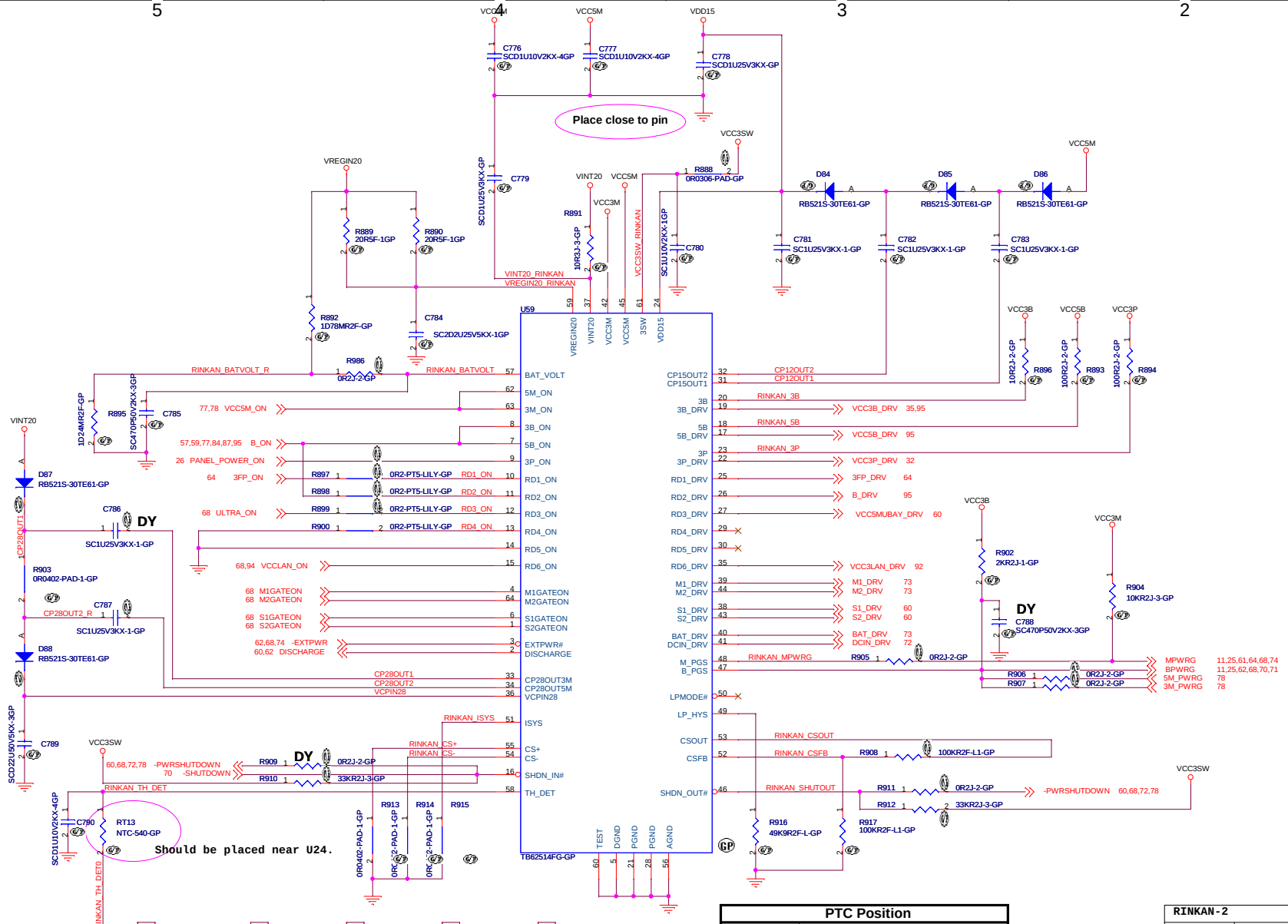

PTC Position	
RT1	Dirver(VCCCPU1) U47
RT2	Dirver(VCCCPU2) U49
RT3	Dirver(VCC GFX)
RT4	FET (VCC3M)
RT5	FET (VCC5M)
RT6	FET(Docking)
RT7	FET (AC Adapter Input)
RT8	FET (M-Battery Input)
RT9	FET (S-Battery Input)
RT10	FET (Charger)
RT11	FET(VCC3WAN Load SW)
RT12	FET(VCC3WLAN Load SW)
RT_CPU1	Monitor CPU
RT13	FET (VCC3_AUX_USB)

USB3.0	Enable	Disable
RT13	PTC	0-ohm, 5%

RINKAN-2		
Toshiba	TB62514FG	74.62514.07T
Rohm	BD41760KVT-G	74.41760.B9T

<Core Design>

Wistron Corporation
21F, 88, Sec.1, Hsin Tai Wu Rd., Hsichih, Taipei Hsien 221, Taiwan, R.O.C.

Title: DC-DC RINKAN-2

Size: Custom | Document Number: Dasher-1 | Rev: SD

Date: Monday, January 10, 2011 | Sheet 91 of 101

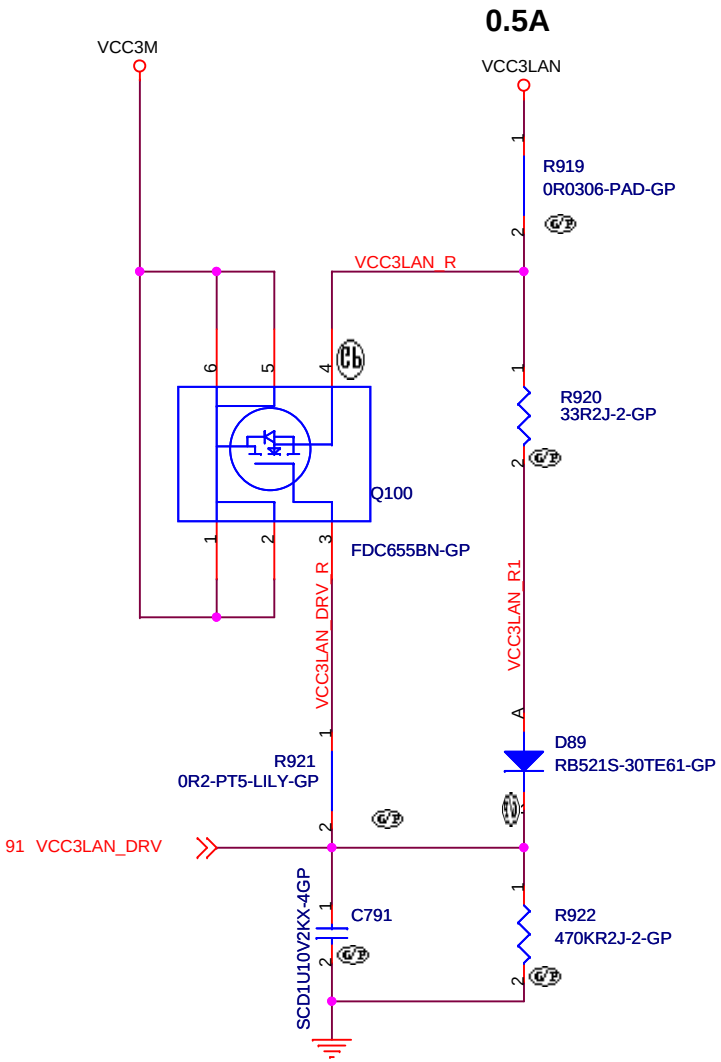

<Core Design>

緯創資通	**Wistron Corporation** 21F, 88, Sec.1, Hsin Tai Wu Rd., Hsichih, Taipei Hsien 221, Taiwan, R.O.C.	
Title	***LOAD SW 1***	
Size A4	Document Number **Dasher-1**	Rev **SD**
Date: Monday, January 10, 2011	Sheet 92 of 101	

B

L

A

N

<Core Design>

緯創資通 **Wistron Corporation**
21F, 88, Sec.1, Hsin Tai Wu Rd., Hsichih,
Taipei Hsien 221, Taiwan, R.O.C.

Title	***BLANK***	
Size A4	Document Number **Dasher-1**	Rev **SD**
Date: Monday, January 10, 2011	Sheet 93 of 101	

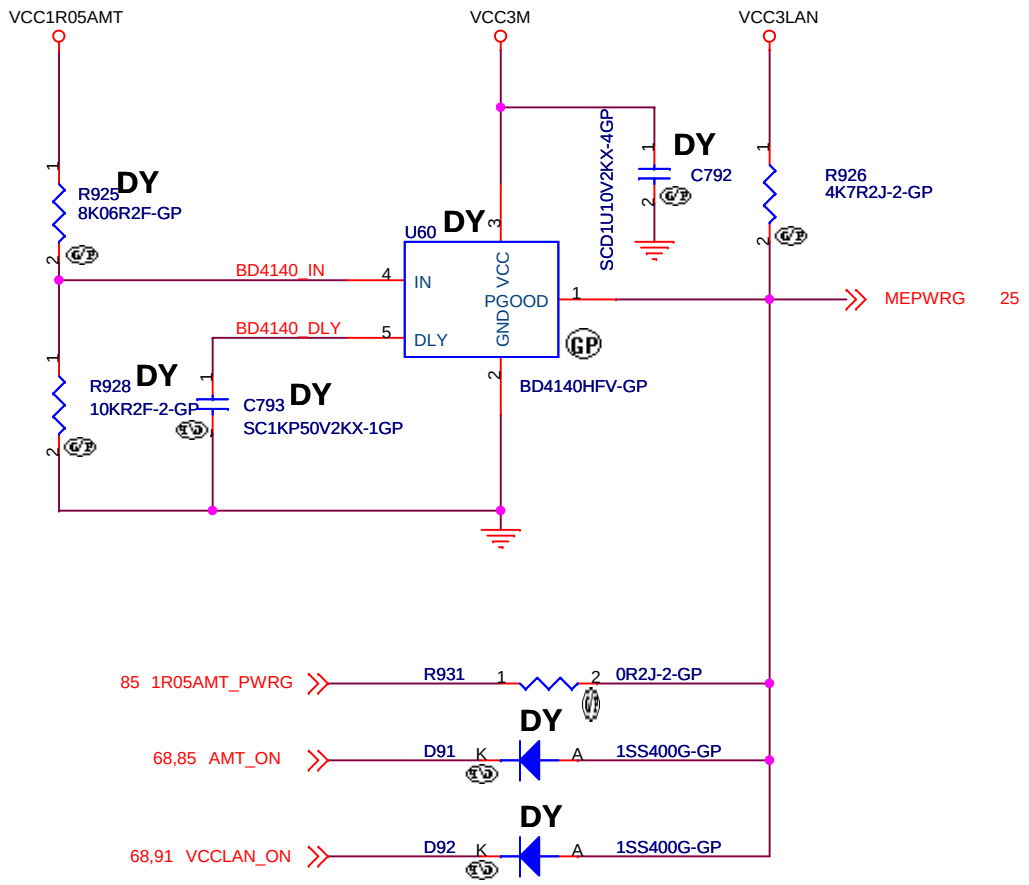

<Core Design>

緯創資通 **Wistron Corporation**
21F, 88, Sec.1, Hsin Tai Wu Rd., Hsichih,
Taipei Hsien 221, Taiwan, R.O.C.

Title

POWER GOOD

Size	Document Number	Rev
A4	**Dasher-1**	**SD**

Date: Monday, January 10, 2011 Sheet 94 of 101

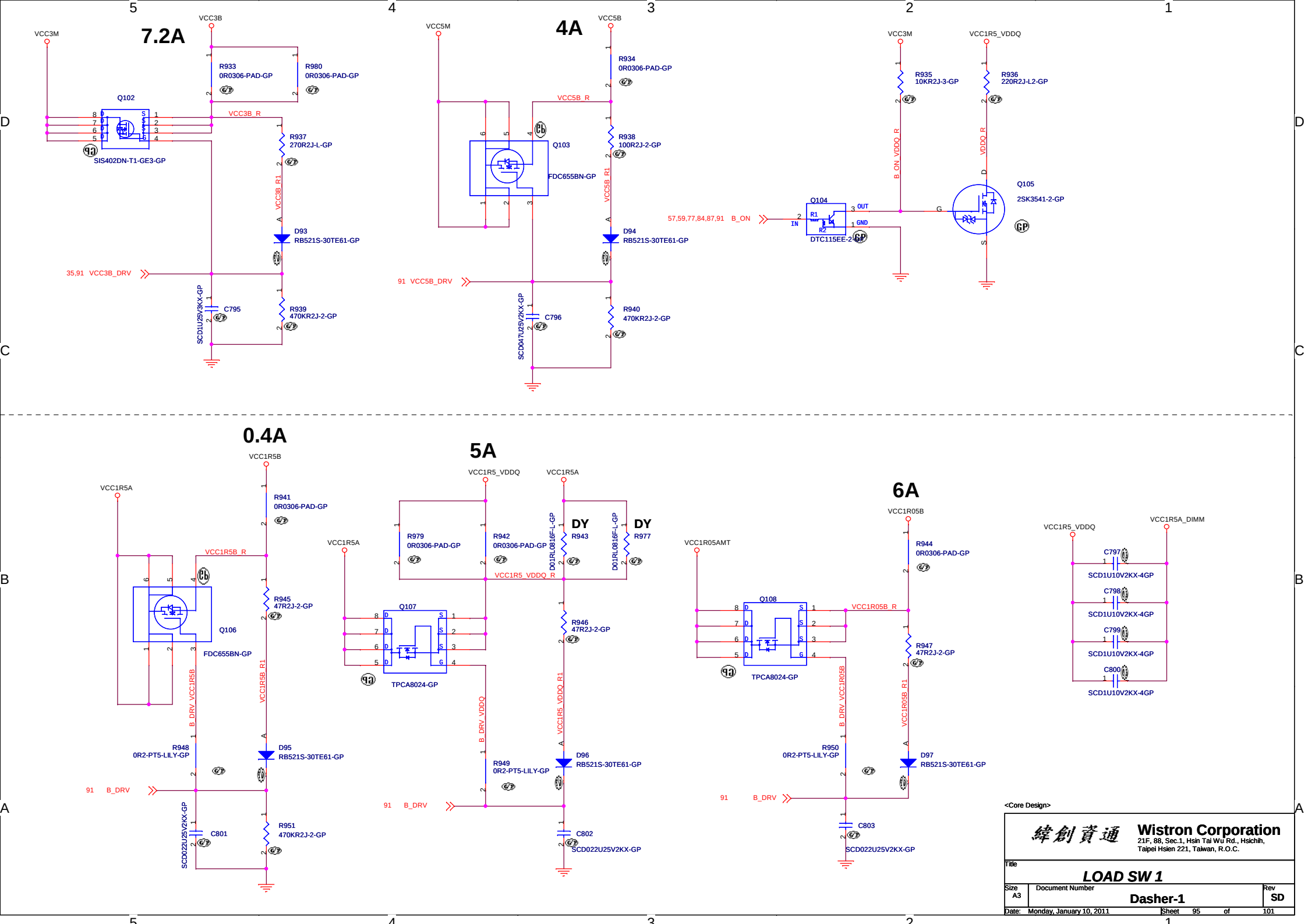
7.2A
VCC3M
VCC3B
R933
0R0306-PAD-GP
R980
0R0306-PAD-GP
Q102
VCC3B_R
SIS402DN-T1-GE3-GP
R937
270R2J-L-GP
VCC3B_R1
D93
RB521S-30TE61-GP
35,91 VCC3B_DRV
C795
SCD1U25V3KX-GP
R939
470KR2J-2-GP
4A
VCC5M
VCC5B
R934
0R0306-PAD-GP
VCC5B_R
Q103
FDC655BN-GP
R938
100R2J-2-GP
VCC5B_R1
D94
RB521S-30TE61-GP
91 VCC5B_DRV
C796
SCD047U25V2KX-GP
R940
470KR2J-2-GP
VCC3M
VCC1R5_VDDQ
R935
10KR2J-3-GP
R936
220R2J-L2-GP
B_ON_VDDQ_R
VDDQ_R
Q105
2SK3541-2-GP
57,59,77,84,87,91 B_ON
Q104
DTC115EE-2-GP
OUT
GND
IN
0.4A
VCC1R5B
VCC1R5A
R941
0R0306-PAD-GP
VCC1R5B_R
Q106
FDC655BN-GP
R945
47R2J-2-GP
B_DRV_VCC1R5B
VCC1R5B_R1
R948
0R2-PT5-LILY-GP
D95
RB521S-30TE61-GP
91 B_DRV
C801
SCD022U25V2KX-GP
R951
470KR2J-2-GP
5A
VCC1R5_VDDQ
VCC1R5A
R979
0R0306-PAD-GP
R942
0R0306-PAD-GP
DY
R943
DY
R977
VCC1R5_VDDQ_R
Q107
TPCA8024-GP
R946
47R2J-2-GP
B_DRV_VDDQ
VCC1R5_VDDQ_R1
R949
0R2-PT5-LILY-GP
D96
RB521S-30TE61-GP
91 B_DRV
C802
SCD022U25V2KX-GP
6A
VCC1R05B
VCC1R05AMT
R944
0R0306-PAD-GP
Q108
TPCA8024-GP
VCC1R05B_R
R947
47R2J-2-GP
B_DRV_VCC1R05B
VCC1R05B_R1
R950
0R2-PT5-LILY-GP
D97
RB521S-30TE61-GP
91 B_DRV
C803
SCD022U25V2KX-GP
VCC1R5_VDDQ
VCC1R5A_DIMM
C797
SCD1U10V2KX-4GP
C798
SCD1U10V2KX-4GP
C799
SCD1U10V2KX-4GP
C800
SCD1U10V2KX-4GP
<Core Design>
緯創資通
Wistron Corporation
21F, 88, Sec.1, Hsin Tai Wu Rd., Hsichih,
Taipei Hsien 221, Taiwan, R.O.C.
Title
LOAD SW 1
Size
A3
Document Number
Dasher-1
Rev
SD
Date: Monday, January 10, 2011
Sheet 95 of 101

B

L

A

N

<Core Design>

緯創資通 **Wistron Corporation**
21F, 88, Sec.1, Hsin Tai Wu Rd., Hsichih,
Taipei Hsien 221, Taiwan, R.O.C.

Title	***BLANK***	
Size A4	Document Number **Dasher-1**	Rev **SD**
Date: Monday, January 10, 2011	Sheet 96 of 101	

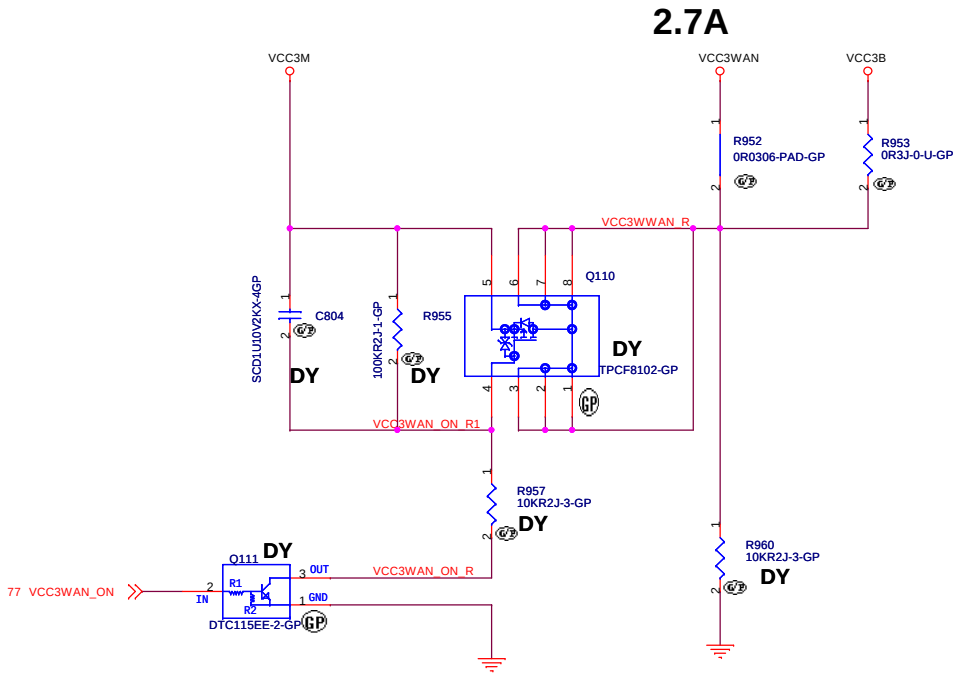

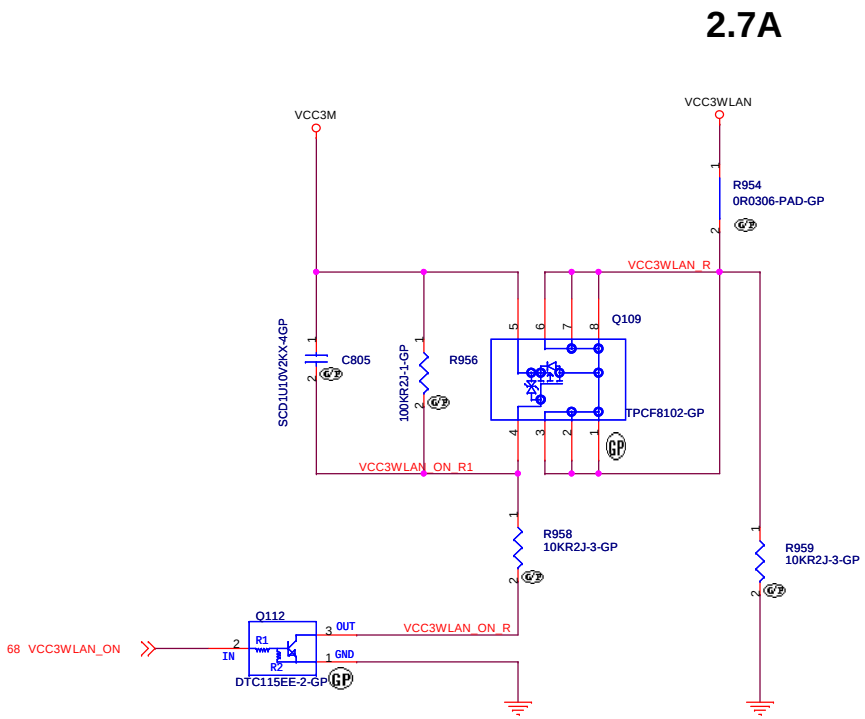

Constant Secure	YES	NO
R953	DY	ASM
C804 R955 Q110 R957 Q111 R960	ASM	DY
R952	ASM	ASM

<Core Design>

緯創資通 **Wistron Corporation**
21F, 88, Sec.1, Hsin Tai Wu Rd., Hsichih,
Taipei Hsien 221, Taiwan, R.O.C.

Title: ***LOAD SW 2***

Size	Document Number	Rev
A3	Dasher-1	SD

Date: Monday, January 10, 2011 Sheet 97 of 101

ZZ.00PAD.911

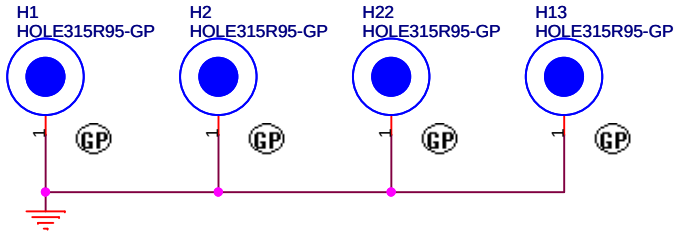

ZZ.00PAD.921

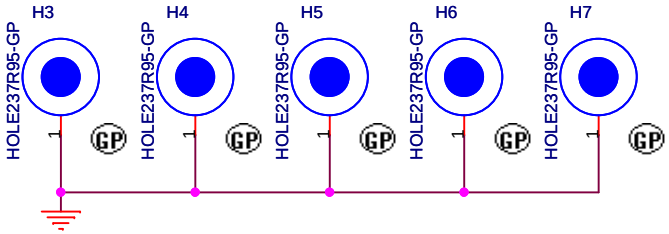

ZZ.00PAD.801

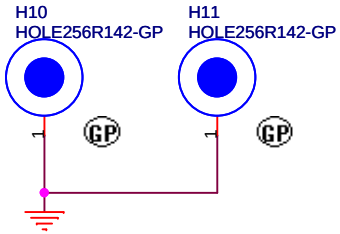

ZZ.SCREW.191

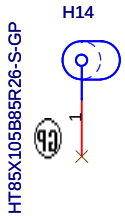

ZZ.0HOLE.XXX

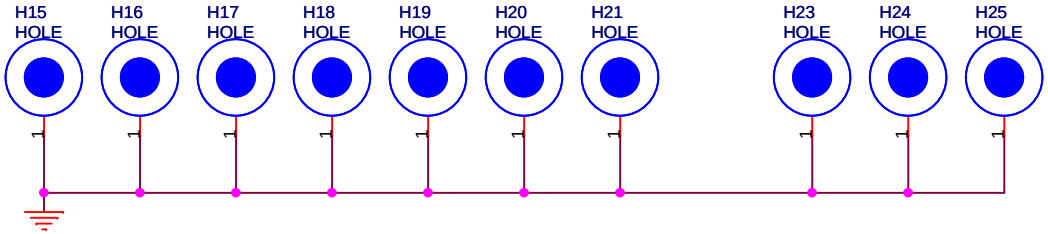

34.49U26.001
GND pad for docking connector

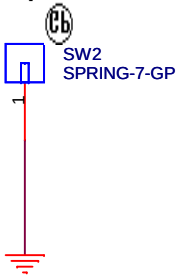

34.49U23.001
GND pad for docking connector

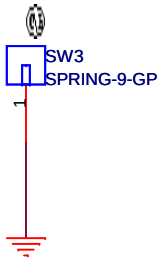

34.15J03.001
spring for EMI

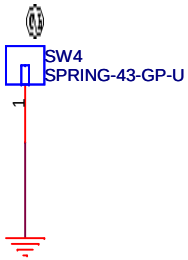

34.15J03.001
spring for RF (SW5~SW7)

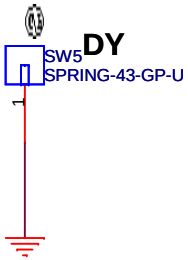

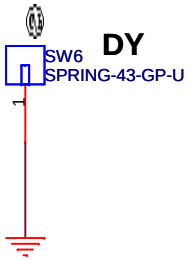

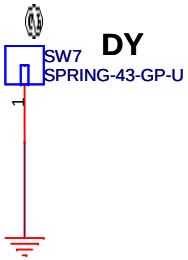

<Core Design>

緯創資通 **Wistron Corporation**
21F, 88, Sec.1, Hsin Tai Wu Rd., Hsichih,
Taipei Hsien 221, Taiwan, R.O.C.

Title: ***HOLES/GND/PADS***

Size	Document Number	Rev
A4	Dasher-1	SD

Date: Monday, January 10, 2011 Sheet 98 of 101

RF decoupling caps

named as RFCxxx

Long power trace EMI decoupling caps

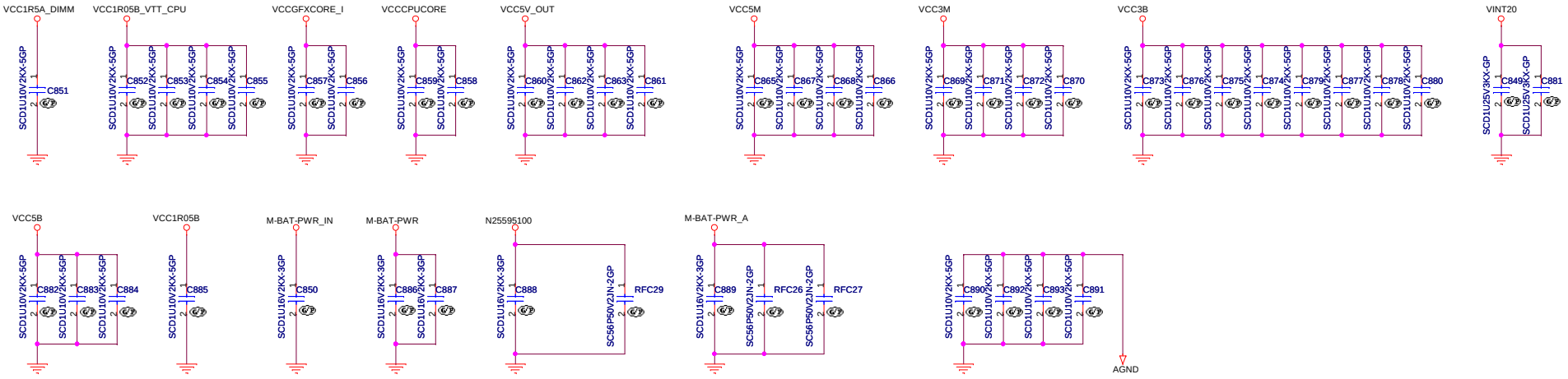

<Core Design>

緯創資通	Wistron Corporation 21F, 88, Sec.1, Hsin Tai Wu Rd., Hsichih, Taipei Hsien 221, Taiwan, R.O.C.	
Title	EMI DECOUPLING	
Size: Custom	Document Number: Dasher-1	Rev: SD
Date: Monday, January 10, 2011	Sheet 99 of 101	

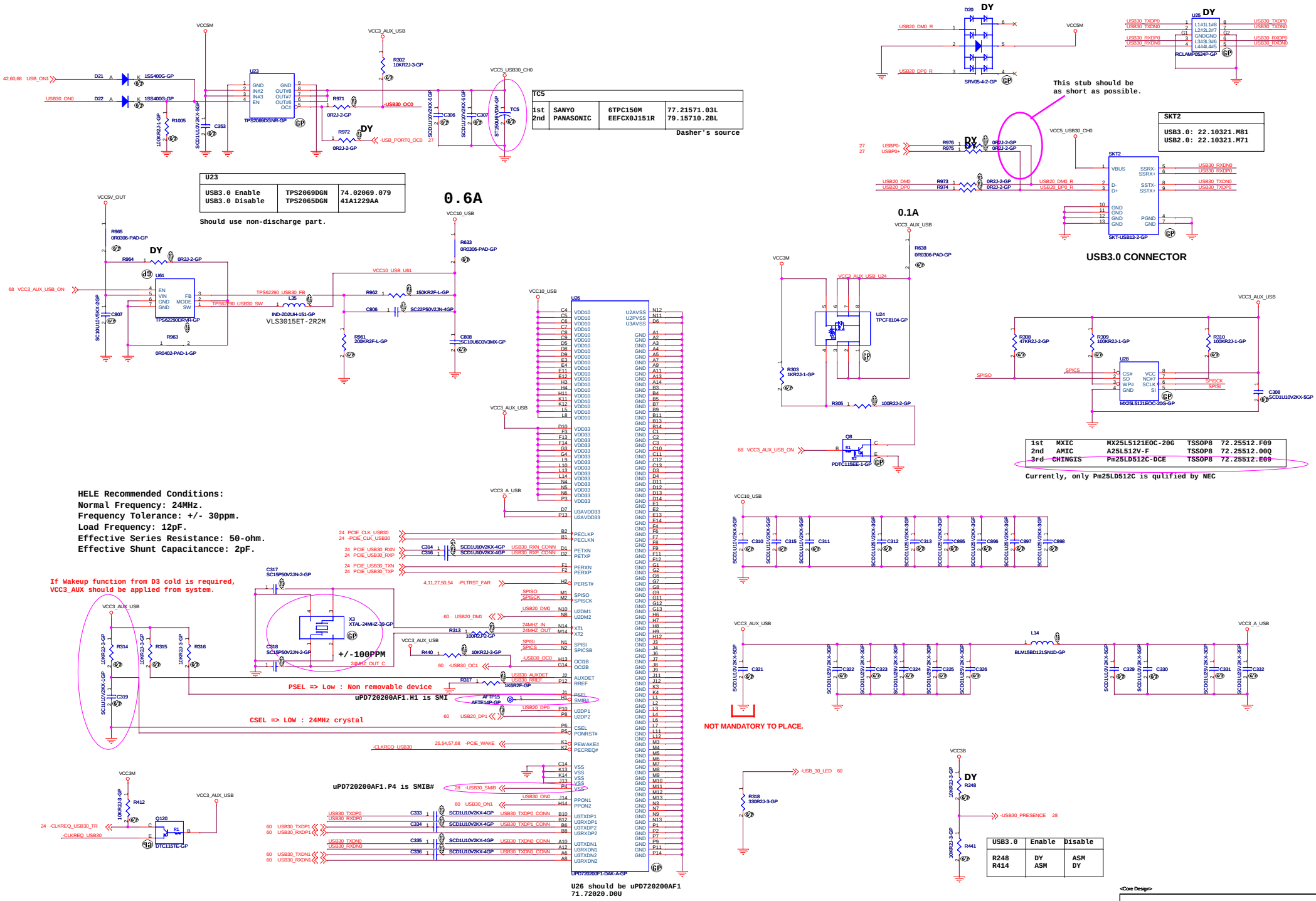

TC5			
1st	SANYO	6TPC150M	77.21571.03L
2nd	PANASONIC	EEFCX0J151R	79.15710.2BL

Dasher's source

U23		
USB3.0 Enable	TPS2069DGN	74.02069.079
USB3.0 Disable	TPS2065DGN	41A1229AA

Should use non-discharge part.

SKT2

USB3.0: 22.10321.M81
USB2.0: 22.10321.M71

1st	MXIC	MX25L5121EOC-20G	TSSOP8	72.25512.F09
2nd	AMIC	A25L512V-F	TSSOP8	72.25512.00Q
3rd	CHINGIS	Pm25LD512C-DCE	TSSOP8	72.25512.E09

USB3.0	Enable	Disable
R248	DY	ASM
R414	ASM	DY

	USB3.0 Enable	USB3.0 Disable
U23	TPS2069DGN	TPS2065DGN
D21	ASM	ASM
D22	ASM	DY
C353	ASM	ASM
R302	ASM	DY
R971	ASM	DY
R972	DY	ASM
C306	ASM	ASM
C307	ASM	ASM
TC5	ASM	ASM
U61	ASM	DY
R965	ASM	DY
R964	DY	DY
R963	ASM	DY
C807	ASM	DY
L35	ASM	DY
R961	ASM	DY
R962	ASM	DY
C806	ASM	DY
C808	ASM	DY
R633	ASM	DY
U26	ASM	DY
C314	ASM	DY
C316	ASM	DY
R313	ASM	DY
X3	ASM	DY
C317	ASM	DY
C318	ASM	DY
C319	ASM	DY
R440	ASM	DY
R314	ASM	DY
R315	ASM	DY
R316	ASM	DY
R317	ASM	DY
C310	ASM	DY
R412	ASM	ASM
Q120	ASM	DY
C333	ASM	DY
C334	ASM	DY
C335	ASM	DY
C336	ASM	DY
U28	ASM	DY
R308	ASM	DY
R309	ASM	DY
R310	ASM	DY
C308	ASM	DY
U24	ASM	DY
R638	ASM	DY
R303	ASM	DY
R305	ASM	DY
Q8	ASM	DY
SKT2	USB3.0 Conn.	USB2.0 Conn.
R973	ASM	DY
R974	ASM	DY
R975	DY	ASM
R976	DY	ASM
D20	DY	DY
D25	DY	DY
C310	ASM	DY
C311	ASM	DY
C312	ASM	DY
C313	ASM	DY
C315	ASM	DY
C320	ASM	DY
C321	ASM	DY
C322	ASM	DY
C323	ASM	DY
C324	ASM	DY
C325	ASM	DY
C326	ASM	DY
C327	ASM	DY
L14	ASM	DY
C329	ASM	DY
C330	ASM	DY
C331	ASM	DY
C332	ASM	DY
R318	ASM	DY
R248	DY	ASM
R441	ASM	DY

	USB3.0 Enable	USB3.0 Disable
R437	DY	ASM
R438	DY	ASM
R436	ASM	DY
R439	ASM	DY
D99	ASM	DY
D100	ASM	DY
R989	DY	ASM
R991	ASM	DY
R988	DY	ASM

<Core Design>

緯創資通 **Wistron Corporation**
21F, 88, Sec.1, Hsin Tai Wu Rd., Hsichih,
Taipei Hsien 221, Taiwan, R.O.C.

Title: ***BLANK***

Size	Document Number	Rev
C	Dasher-1	SD

Date: Monday, January 10, 2011 Sheet 101 of 101