ZZZ1	ZZZ2	ZZZ3	ZZZ4	ZZZ5
PCB	PCB	SW	USB	AUDIO
	DAZ@	DAZ@	DAZ@	DAZ@

SE000008600

Compal Confidential

Tanglha Schematics Document

Intel Merom Processor with Crestline + DDRII + ICH8M

2007-08-16

REV: 1.0

Security Classification	Compal Secret Data		
Issued Date	2006/08/18	Deciphered Date	2007/8/18

THIS SHEET OF ENGINEERING DRAWING IS THE PROPRIETARY PROPERTY OF COMPAL ELECTRONICS, INC. AND CONTAINS CONFIDENTIAL AND TRADE SECRET INFORMATION. THIS SHEET MAY NOT BE TRANSFERED FROM THE CUSTODY OF THE COMPETENT DIVISION OF R&D DEPARTMENT EXCEPT AS AUTHORIZED BY COMPAL ELECTRONICS, INC. NEITHER THIS SHEET NOR THE INFORMATION IT CONTAINS MAY BE USED BY OR DISCLOSED TO ANY THIRD PARTY WITHOUT PRIOR WRITTEN CONSENT OF COMPAL ELECTRONICS, INC.

Compal Electronics, Inc.

Title: Cover Page

Size	Document Number	Rev
B	LA-3861P	0.1

Date: Monday, September 03, 2007 | Sheet 1 of 47

Compal Confidential

Model Name : Everest
File Name : LA-3691P

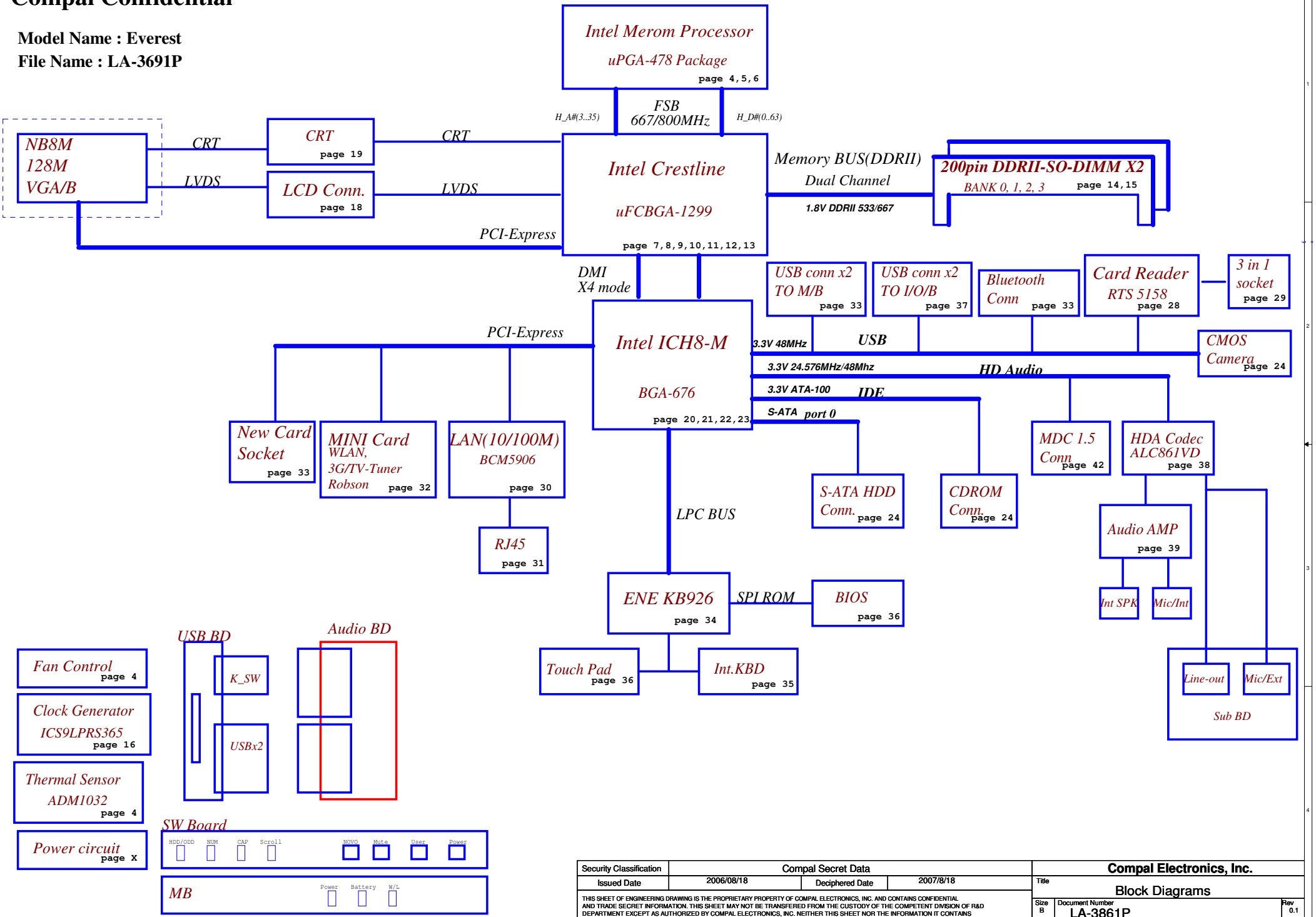

Security Classification	Compal Secret Data		
Issued Date	2006/08/18	Deciphered Date	2007/8/18

THIS SHEET OF ENGINEERING DRAWING IS THE PROPRIETARY PROPERTY OF COMPAL ELECTRONICS, INC. AND CONTAINS CONFIDENTIAL AND TRADE SECRET INFORMATION. THIS SHEET MAY NOT BE TRANSFERED FROM THE CUSTODY OF THE COMPETENT DIVISION OF R&D DEPARTMENT EXCEPT AS AUTHORIZED BY COMPAL ELECTRONICS, INC. NEITHER THIS SHEET NOR THE INFORMATION IT CONTAINS MAY BE USED BY OR DISCLOSED TO ANY THIRD PARTY WITHOUT PRIOR WRITTEN CONSENT OF COMPAL ELECTRONICS, INC.

Compal Electronics, Inc.

Title: Block Diagrams

Size: B | Document Number: LA-3861P | Rev: 0.1

Date: Monday, August 20, 2007 | Sheet 2 of 47

Voltage Rails

Power Plane	Description	S1	S3	S5
VIN	Adapter power supply (19V)	N/A	N/A	N/A
B+	AC or battery power rail for power circuit.	N/A	N/A	N/A
+CPU_CORE	Core voltage for CPU	ON	OFF	OFF
+0.9VS	0.9V switched power rail for DDR terminator	ON	OFF	OFF
+1.05VS	1.05V switched power rail	ON	OFF	OFF
+1.25VS	1.25V switched power rail	ON	OFF	OFF
+1.5VS	1.5V switched power rail	ON	OFF	OFF
+1.8V	1.8V power rail for DDR	ON	ON	OFF
+1.8VS	1.8V switched power rail	ON	OFF	OFF
+2.5VS	2.5V switched power rail	ON	OFF	OFF
+3VALW	3.3V always on power rail	ON	ON	ON*
+3VS	3.3V switched power rail	ON	OFF	OFF
+5VALW	5V always on power rail	ON	ON	ON*
+5VS	5V switched power rail	ON	OFF	OFF
+VSB	VSB always on power rail	ON	ON	ON*
+RTCVCC	RTC power	ON	ON	ON

STATE \ SIGNAL	SLP_S1#	SLP_S3#	SLP_S4#	SLP_S5#	+VALW	+V	+VS	Clock
Full ON	HIGH	HIGH	HIGH	HIGH	ON	ON	ON	ON
S1(Power On Suspend)	LOW	HIGH	HIGH	HIGH	ON	ON	ON	LOW
S3 (Suspend to RAM)	LOW	LOW	HIGH	HIGH	ON	ON	OFF	OFF
S4 (Suspend to Disk)	LOW	LOW	LOW	HIGH	ON	OFF	OFF	OFF
S5 (Soft OFF)	LOW	LOW	LOW	LOW	ON	OFF	OFF	OFF

BOARD ID Table

ID1	ID0	TEST
0(R744)	0(R745)	A-TEST
0(R744)	1(R742)	B-TEST
1(R741)	0(R745)	C-TEST

PANEL ID Table

R	Size
Ra (R743)	15W
Rb (R740)	14W

Note : ON* means that this power plane is ON only with AC power available, otherwise it is OFF.

External PCI Devices

DEVICE	IDSEL #	REQ/GNT #	PIRQ

No PCI Device

EC SM Bus1 address

Device	Address
Smart Battery	0001 011X b
EEPROM(24C16/02)	1010 000X b

EC SM Bus2 address

Device	Address
GMT-781	1001 100X b
NVIDIA NB8X	

ICH8M SM Bus address

Device	Address
Clock Generator (ICS9LPRS325AKLFT_MLF72)	1101 001Xb
DDR DIMM0	1010 000Xb
DDR DIMM1	1010 010Xb

THIS SHEET OF ENGINEERING DRAWING IS THE PROPRIETARY PROPERTY OF COMPAL ELECTRONICS, INC. AND CONTAINS CONFIDENTIAL AND TRADE SECRET INFORMATION. THIS SHEET MAY NOT BE TRANSFERED FROM THE CUSTODY OF THE COMPETENT DIVISION OF R&D DEPARTMENT EXCEPT AS AUTHORIZED BY COMPAL ELECTRONICS, INC. NEITHER THIS SHEET NOR THE INFORMATION IT CONTAINS MAY BE USED BY OR DISCLOSED TO ANY THIRD PARTY WITHOUT PRIOR WRITTEN CONSENT OF COMPAL ELECTRONICS, INC.

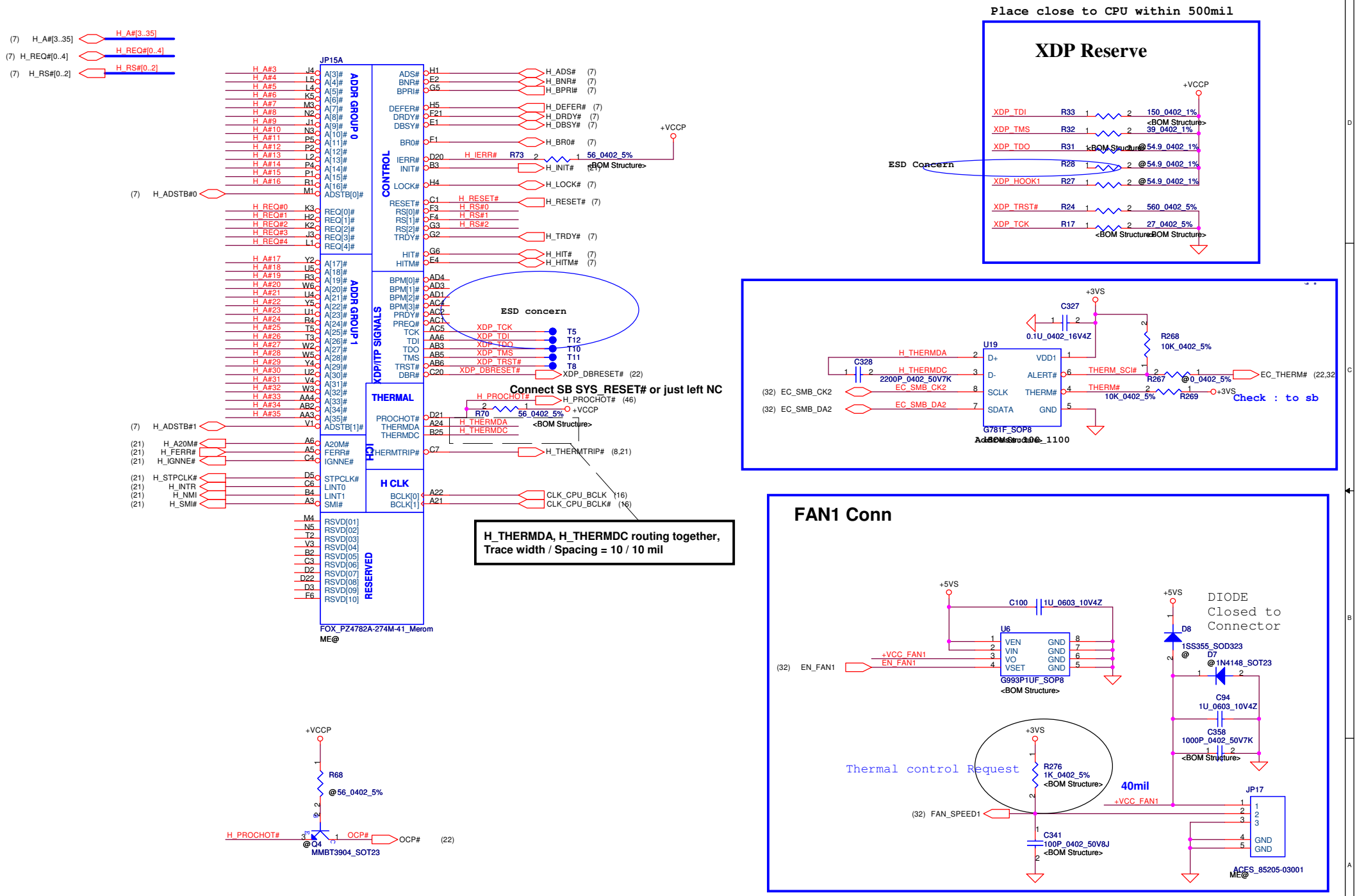

Security Classification	Compal Secret Data		
Issued Date	2006/08/18	Deciphered Date	2007/8/18

THIS SHEET OF ENGINEERING DRAWING IS THE PROPRIETARY PROPERTY OF COMPAL ELECTRONICS, INC. AND CONTAINS CONFIDENTIAL AND TRADE SECRET INFORMATION. THIS SHEET MAY NOT BE TRANSFERED FROM THE CUSTODY OF THE COMPETENT DIVISION OF R&D DEPARTMENT EXCEPT AS AUTHORIZED BY COMPAL ELECTRONICS, INC. NEITHER THIS SHEET NOR THE INFORMATION IT CONTAINS MAY BE USED BY OR DISCLOSED TO ANY THIRD PARTY WITHOUT PRIOR WRITTEN CONSENT OF COMPAL ELECTRONICS, INC.

Compal Electronics, Inc.

Title: Merom (1/3)

Size: B | Document Number: LA-3861P | Rev: 0.1

Date: Monday, August 20, 2007 | Sheet 4 of 47

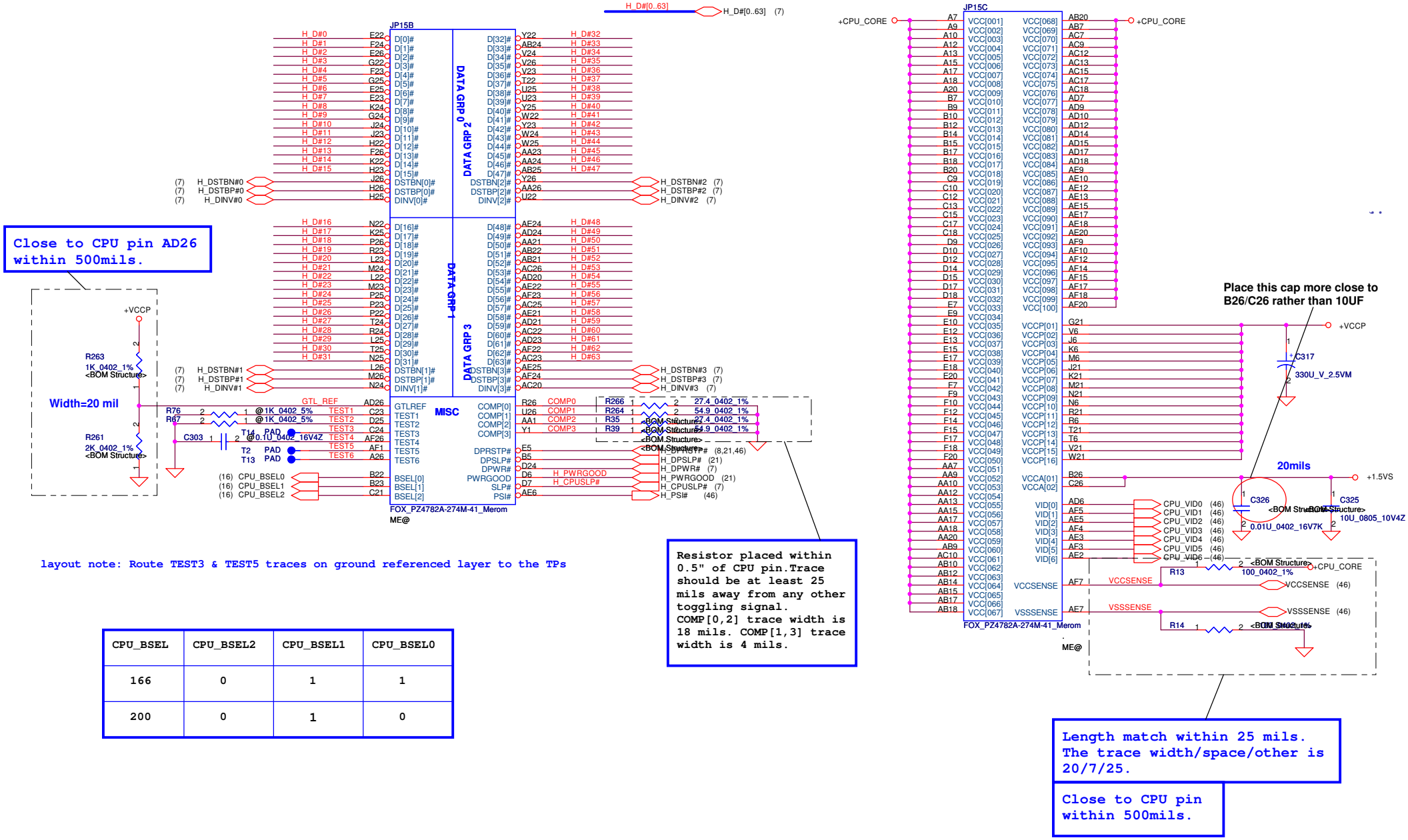

CPU_BSEL	CPU_BSEL2	CPU_BSEL1	CPU_BSEL0
166	0	1	1
200	0	1	0

Security Classification	Compal Secret Data		
Issued Date	2006/08/18	Deciphered Date	2007/8/18

THIS SHEET OF ENGINEERING DRAWING IS THE PROPRIETARY PROPERTY OF COMPAL ELECTRONICS, INC. AND CONTAINS CONFIDENTIAL AND TRADE SECRET INFORMATION. THIS SHEET MAY NOT BE TRANSFERED FROM THE CUSTODY OF THE COMPETENT DIVISION OF R&D DEPARTMENT EXCEPT AS AUTHORIZED BY COMPAL ELECTRONICS, INC. NEITHER THIS SHEET NOR THE INFORMATION IT CONTAINS MAY BE USED BY OR DISCLOSED TO ANY THIRD PARTY WITHOUT PRIOR WRITTEN CONSENT OF COMPAL ELECTRONICS, INC.

Compal Electronics, Inc.

Title: Merom (2/3)

Size: B | Document Number: LA-3861P | Rev: 0.1

Date: Monday, August 20, 2007 | Sheet 5 of 47

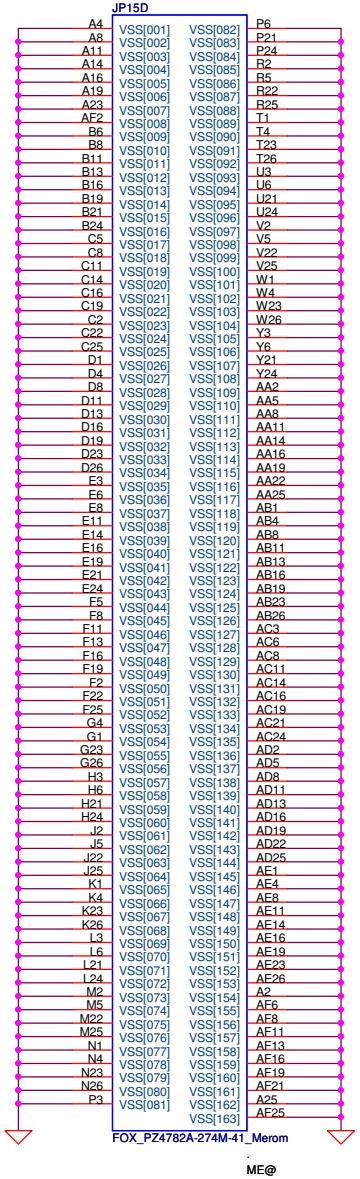

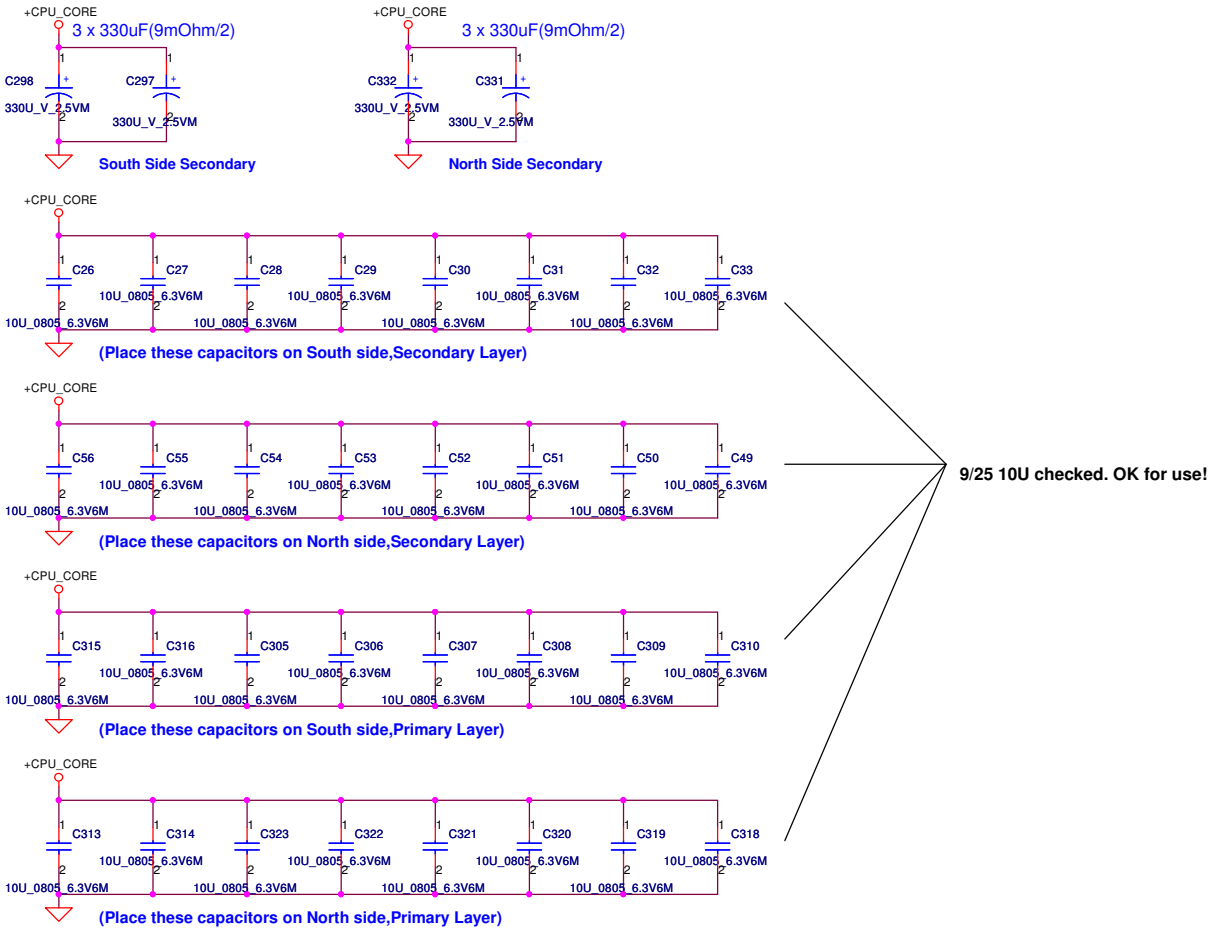

+CPU-CORE Decoupling	C,uF	ESR, mohm	ESL,nH
SPCAP,Polymer	6X330uF	9m ohm/6	1.8nH/6
MLCC 0805 X5R	32X22uF 32X10uF	3m ohm/32 3m ohm/32	0.6nH/32 0.6nH/32

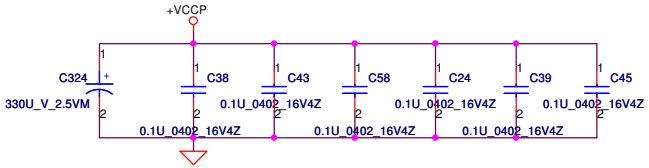

Security Classification	Compal Secret Data		
Issued Date	2006/08/18	Deciphered Date	2007/8/18

THIS SHEET OF ENGINEERING DRAWING IS THE PROPRIETARY PROPERTY OF COMPAL ELECTRONICS, INC. AND CONTAINS CONFIDENTIAL AND TRADE SECRET INFORMATION. THIS SHEET MAY NOT BE TRANSFERED FROM THE CUSTODY OF THE COMPETENT DIVISION OF R&D DEPARTMENT EXCEPT AS AUTHORIZED BY COMPAL ELECTRONICS, INC. NEITHER THIS SHEET NOR THE INFORMATION IT CONTAINS MAY BE USED BY OR DISCLOSED TO ANY THIRD PARTY WITHOUT PRIOR WRITTEN CONSENT OF COMPAL ELECTRONICS, INC.

Compal Electronics, Inc.

Title: Merom (3/3)

Size: B | Document Number: LA-3861P | Rev: 0.1

Date: Monday, August 20, 2007 | Sheet 6 of 47

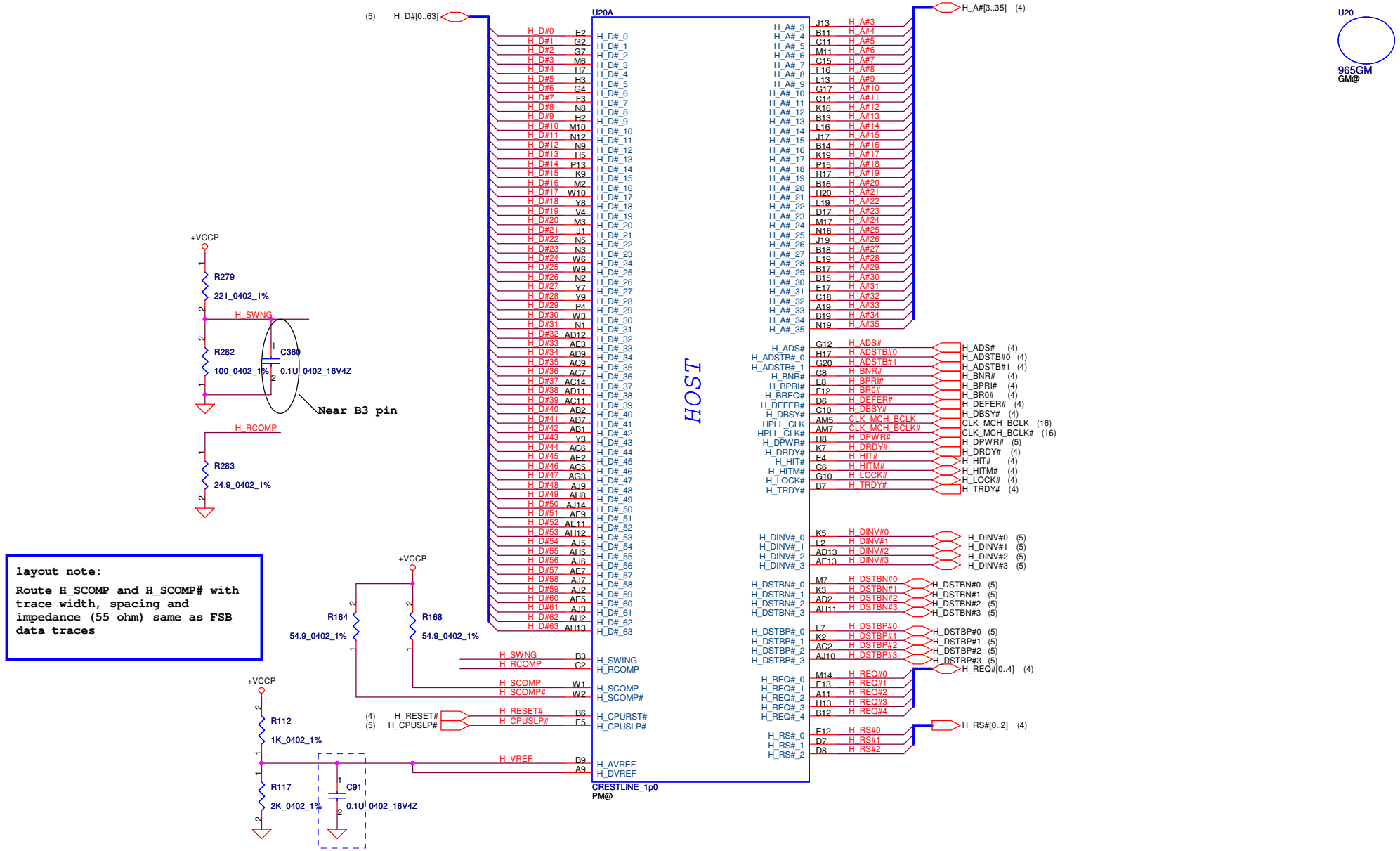

layout note:

Route H_SCOMP and H_SCOMP# with trace width, spacing and impedance (55 ohm) same as FSB data traces

within 100mil to Ball A9,B9

Layout Note:
H_RCOMP / H_VREF / H_SWNG
trace width and spacing is 10/20

Security Classification	Compal Secret Data		
Issued Date	2006/08/18	Deciphered Date	2007/8/18

THIS SHEET OF ENGINEERING DRAWING IS THE PROPRIETARY PROPERTY OF COMPAL ELECTRONICS, INC. AND CONTAINS CONFIDENTIAL AND TRADE SECRET INFORMATION. THIS SHEET MAY NOT BE TRANSFERED FROM THE CUSTODY OF THE COMPETENT DIVISION OF R&D DEPARTMENT EXCEPT AS AUTHORIZED BY COMPAL ELECTRONICS, INC. NEITHER THIS SHEET NOR THE INFORMATION IT CONTAINS MAY BE USED BY OR DISCLOSED TO ANY THIRD PARTY WITHOUT PRIOR WRITTEN CONSENT OF COMPAL ELECTRONICS, INC.

Compal Electronics, Inc.

Title: Crestline (1/7)-GTL

Size: B | Document Number: LA-3861P | Rev: 0.1

Date: Monday, August 20, 2007 | Sheet 7 of 47

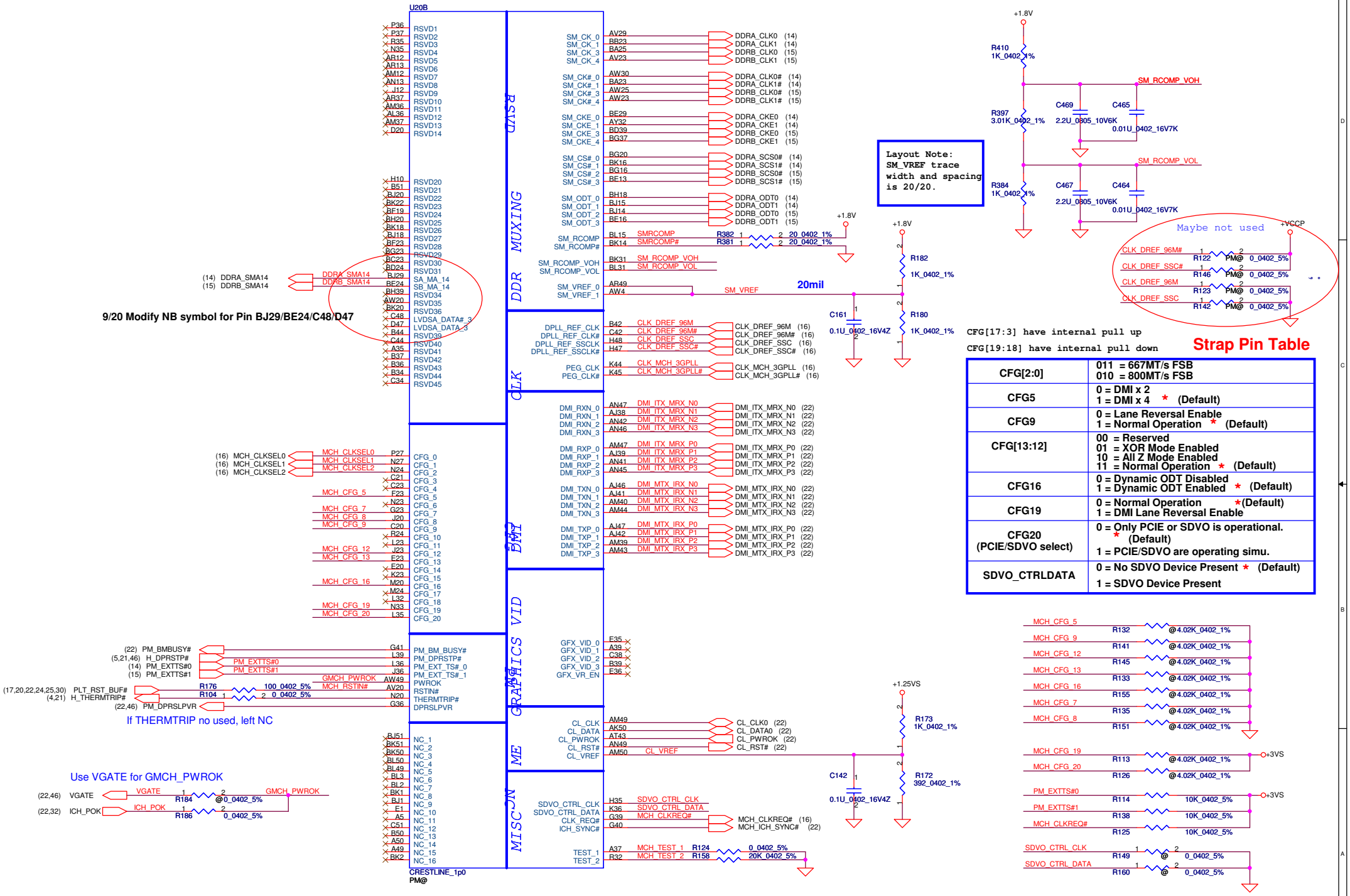

Strap Pin Table

CFG[2:0]	011 = 667MT/s FSB 010 = 800MT/s FSB
CFG5	0 = DMI x 2 1 = DMI x 4 * (Default)
CFG9	0 = Lane Reversal Enable 1 = Normal Operation * (Default)
CFG[13:12]	00 = Reserved 01 = XOR Mode Enabled 10 = All Z Mode Enabled 11 = Normal Operation * (Default)
CFG16	0 = Dynamic ODT Disabled 1 = Dynamic ODT Enabled * (Default)
CFG19	0 = Normal Operation *(Default) 1 = DMI Lane Reversal Enable
CFG20 (PCIE/SDVO select)	0 = Only PCIE or SDVO is operational. * (Default) 1 = PCIE/SDVO are operating simu.
SDVO_CTRLDATA	0 = No SDVO Device Present * (Default) 1 = SDVO Device Present

THIS SHEET OF ENGINEERING DRAWING IS THE PROPRIETARY PROPERTY OF COMPAL ELECTRONICS, INC. AND CONTAINS CONFIDENTIAL AND TRADE SECRET INFORMATION. THIS SHEET MAY NOT BE TRANSFERED FROM THE CUSTODY OF THE COMPETENT DIVISION OF R&D DEPARTMENT EXCEPT AS AUTHORIZED BY COMPAL ELECTRONICS, INC. NEITHER THIS SHEET NOR THE INFORMATION IT CONTAINS MAY BE USED BY OR DISCLOSED TO ANY THIRD PARTY WITHOUT PRIOR WRITTEN CONSENT OF COMPAL ELECTRONICS, INC.

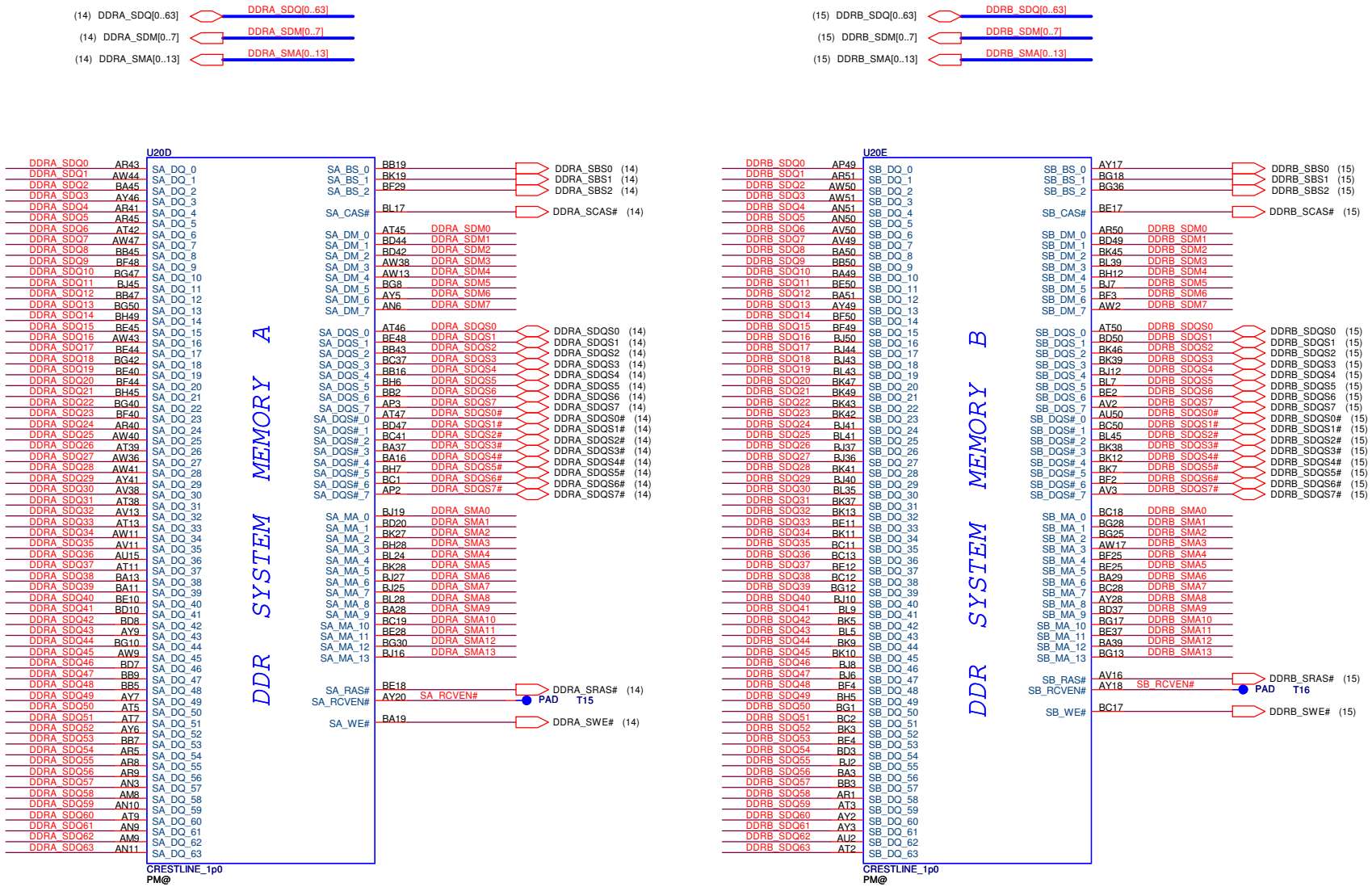

Security Classification	Compal Secret Data		
Issued Date	2006/08/18	Deciphered Date	2007/8/18

THIS SHEET OF ENGINEERING DRAWING IS THE PROPRIETARY PROPERTY OF COMPAL ELECTRONICS, INC. AND CONTAINS CONFIDENTIAL AND TRADE SECRET INFORMATION. THIS SHEET MAY NOT BE TRANSFERED FROM THE CUSTODY OF THE COMPETENT DIVISION OF R&D DEPARTMENT EXCEPT AS AUTHORIZED BY COMPAL ELECTRONICS, INC. NEITHER THIS SHEET NOR THE INFORMATION IT CONTAINS MAY BE USED BY OR DISCLOSED TO ANY THIRD PARTY WITHOUT PRIOR WRITTEN CONSENT OF COMPAL ELECTRONICS, INC.

Compal Electronics, Inc.

Title: Crestline (3/7)-DDRII

Size: B | Document Number: LA-3861P | Rev: 0.1

Date: Monday, August 20, 2007 | Sheet 9 of 47

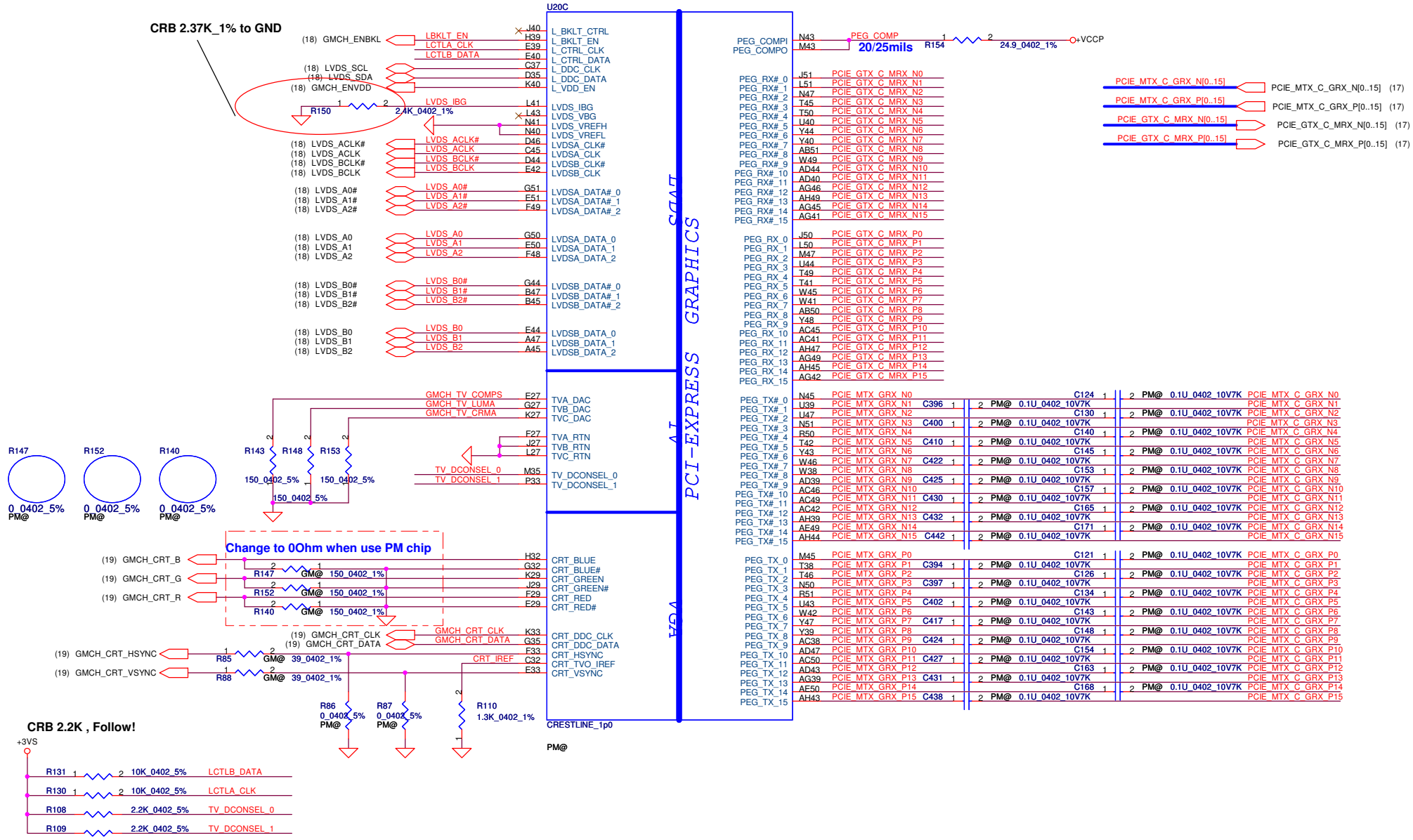

Security Classification	Compal Secret Data		
Issued Date	2006/08/18	Deciphered Date	2007/8/18

THIS SHEET OF ENGINEERING DRAWING IS THE PROPRIETARY PROPERTY OF COMPAL ELECTRONICS, INC. AND CONTAINS CONFIDENTIAL AND TRADE SECRET INFORMATION. THIS SHEET MAY NOT BE TRANSFERED FROM THE CUSTODY OF THE COMPETENT DIVISION OF R&D DEPARTMENT EXCEPT AS AUTHORIZED BY COMPAL ELECTRONICS, INC. NEITHER THIS SHEET NOR THE INFORMATION IT CONTAINS MAY BE USED BY OR DISCLOSED TO ANY THIRD PARTY WITHOUT PRIOR WRITTEN CONSENT OF COMPAL ELECTRONICS, INC.

Compal Electronics, Inc.

Title: Crestline (4/7)-VGA/LVDS/TV

Size	Document Number	Rev
B	LA-3861P	0.1

Date: Monday, August 20, 2007 | Sheet 10 of 47

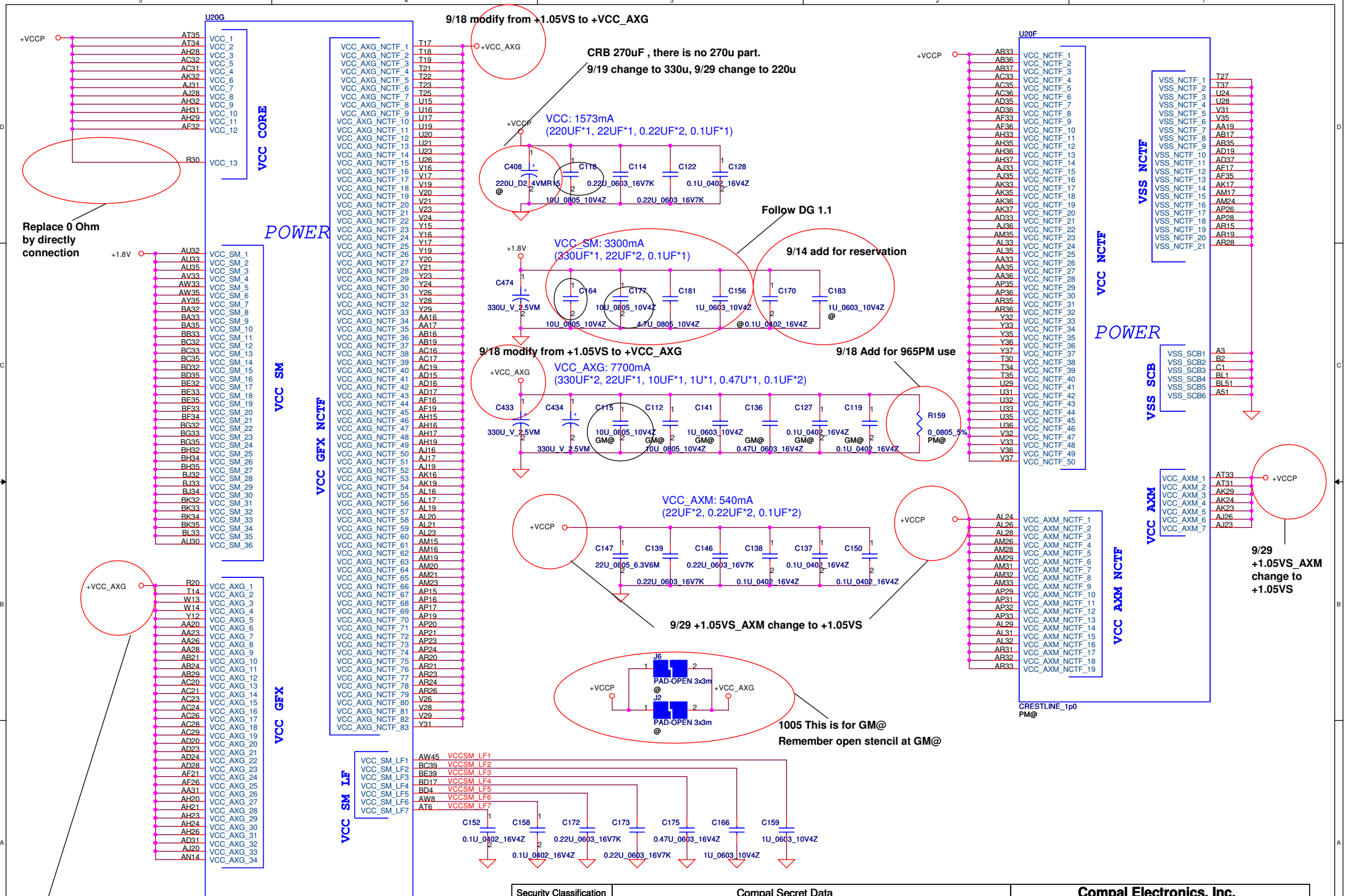

Security Classification	Compal Secret Data		
Issued Date	2006/08/18	Deciphered Date	2007/8/18

THIS SHEET OF ENGINEERING DRAWING IS THE PROPRIETARY PROPERTY OF COMPAL ELECTRONICS, INC. AND CONTAINS CONFIDENTIAL AND TRADE SECRET INFORMATION. THIS SHEET MAY NOT BE TRANSFERED FROM THE CUSTODY OF THE COMPETENT DIVISION OF R&D DEPARTMENT EXCEPT AS AUTHORIZED BY COMPAL ELECTRONICS, INC. NEITHER THIS SHEET NOR THE INFORMATION IT CONTAINS MAY BE USED BY OR DISCLOSED TO ANY THIRD PARTY WITHOUT PRIOR WRITTEN CONSENT OF COMPAL ELECTRONICS, INC.

Compal Electronics, Inc.

Title: Crestline (5/7)-VCC

Size: B | Document Number: LA-3861P | Rev: 0.1

Date: Monday, August 20, 2007 | Sheet 11 of 47

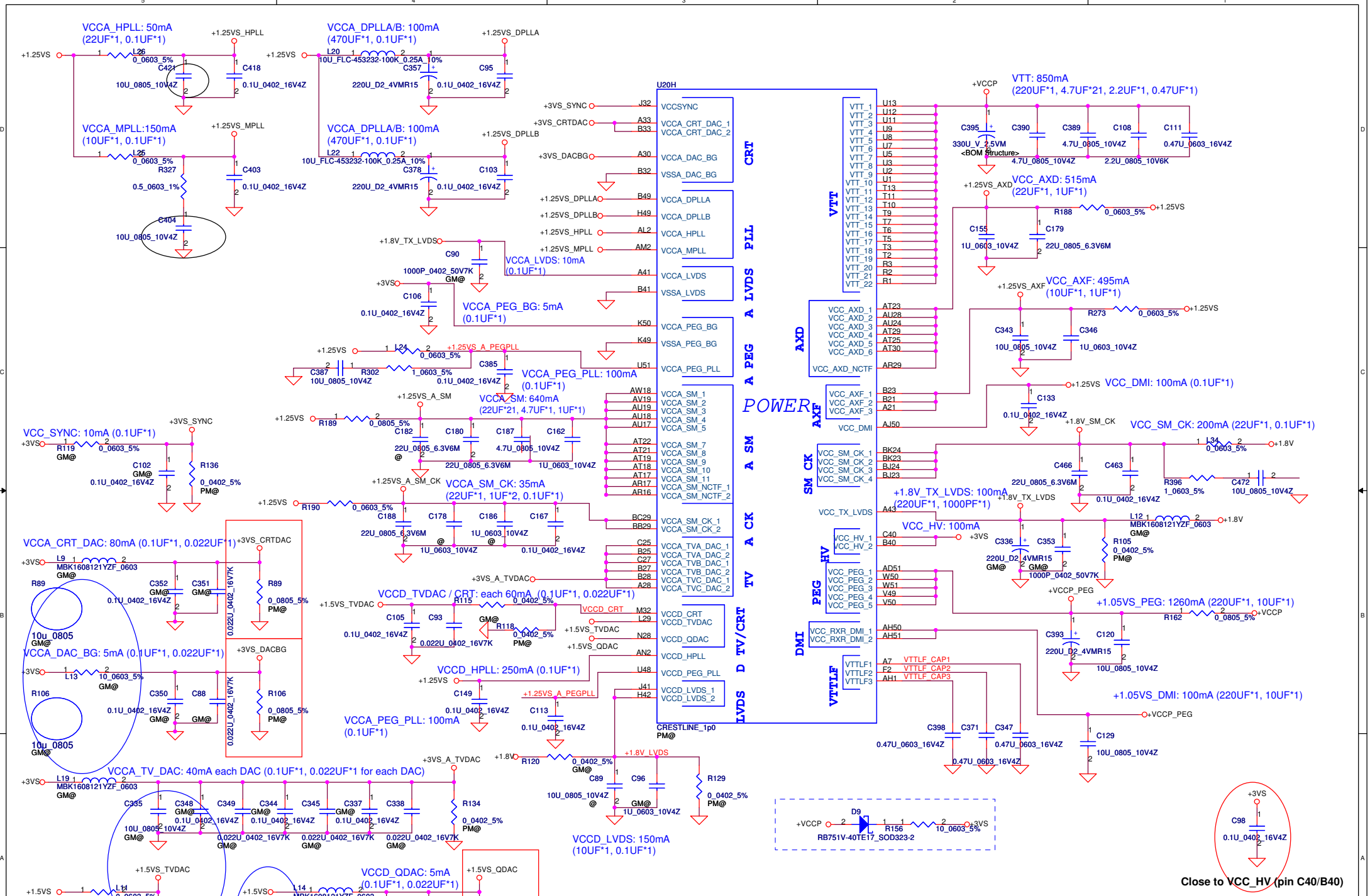

Security Classification	Compal Secret Data		
Issued Date	2006/08/18	Deciphered Date	2007/8/18

THIS SHEET OF ENGINEERING DRAWING IS THE PROPRIETARY PROPERTY OF COMPAL ELECTRONICS, INC. AND CONTAINS CONFIDENTIAL AND TRADE SECRET INFORMATION. THIS SHEET MAY NOT BE TRANSFERED FROM THE CUSTODY OF THE COMPETENT DIVISION OF R&D DEPARTMENT EXCEPT AS AUTHORIZED BY COMPAL ELECTRONICS, INC. NEITHER THIS SHEET NOR THE INFORMATION IT CONTAINS MAY BE USED BY OR DISCLOSED TO ANY THIRD PARTY WITHOUT PRIOR WRITTEN CONSENT OF COMPAL ELECTRONICS, INC.

Compal Electronics, Inc.

Title: Crestline (6/7)-VCC

Size: B | Document Number: LA-3861P | Rev: 0.1

Date: Monday, August 20, 2007 | Sheet 12 of 47

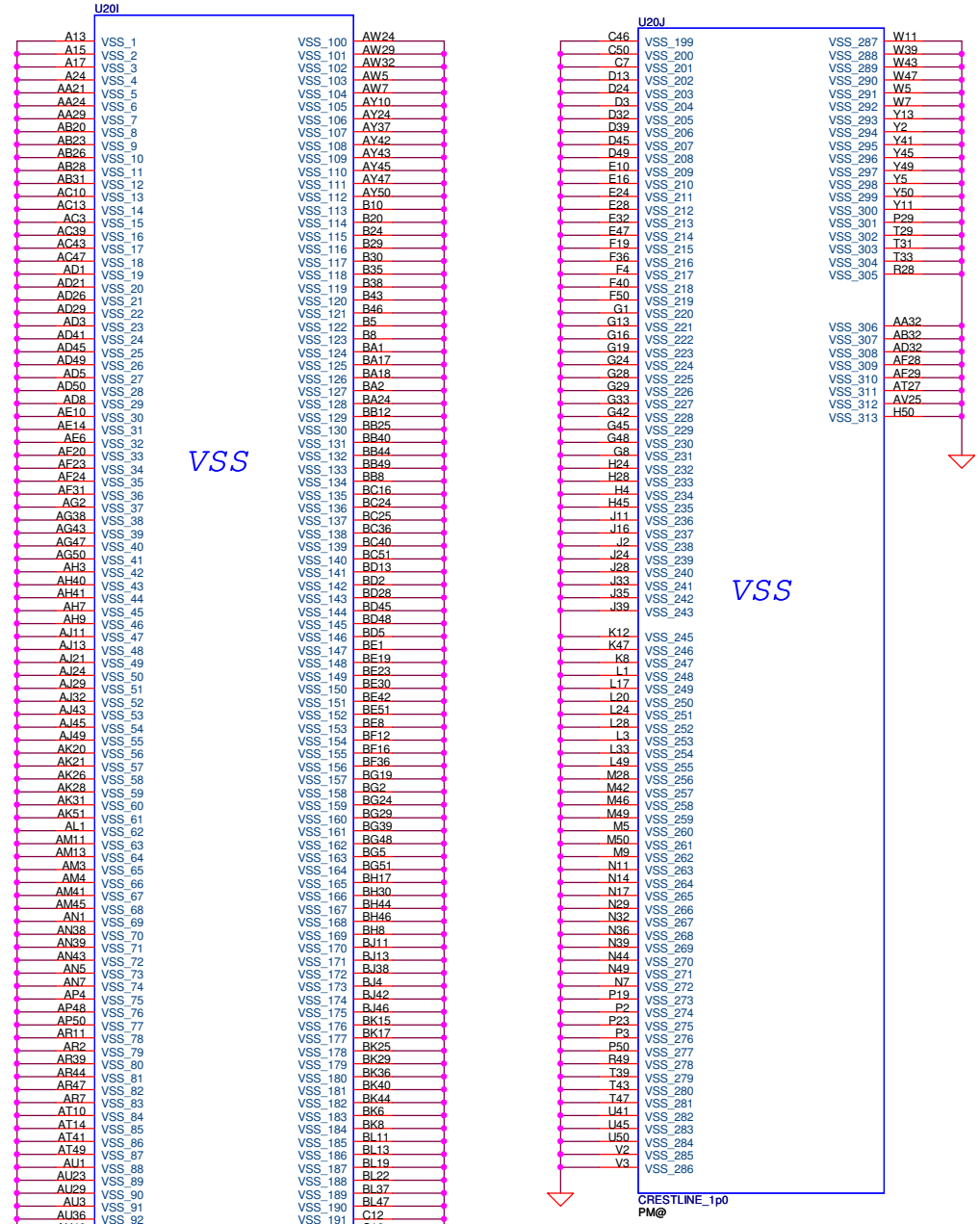

Security Classification	Compal Secret Data		
Issued Date	2006/08/18	Deciphered Date	2007/8/18

THIS SHEET OF ENGINEERING DRAWING IS THE PROPRIETARY PROPERTY OF COMPAL ELECTRONICS, INC. AND CONTAINS CONFIDENTIAL AND TRADE SECRET INFORMATION. THIS SHEET MAY NOT BE TRANSFERED FROM THE CUSTODY OF THE COMPETENT DIVISION OF R&D DEPARTMENT EXCEPT AS AUTHORIZED BY COMPAL ELECTRONICS, INC. NEITHER THIS SHEET NOR THE INFORMATION IT CONTAINS MAY BE USED BY OR DISCLOSED TO ANY THIRD PARTY WITHOUT PRIOR WRITTEN CONSENT OF COMPAL ELECTRONICS, INC.

Compal Electronics, Inc.

Title: Crestline (7/7)-GND

Size: B | Document Number: LA-3861P | Rev: 0.1

Date: Monday, August 20, 2007 | Sheet 13 of 47

9/25 Change DIMM0 to SP070004Z00 (HBL50)

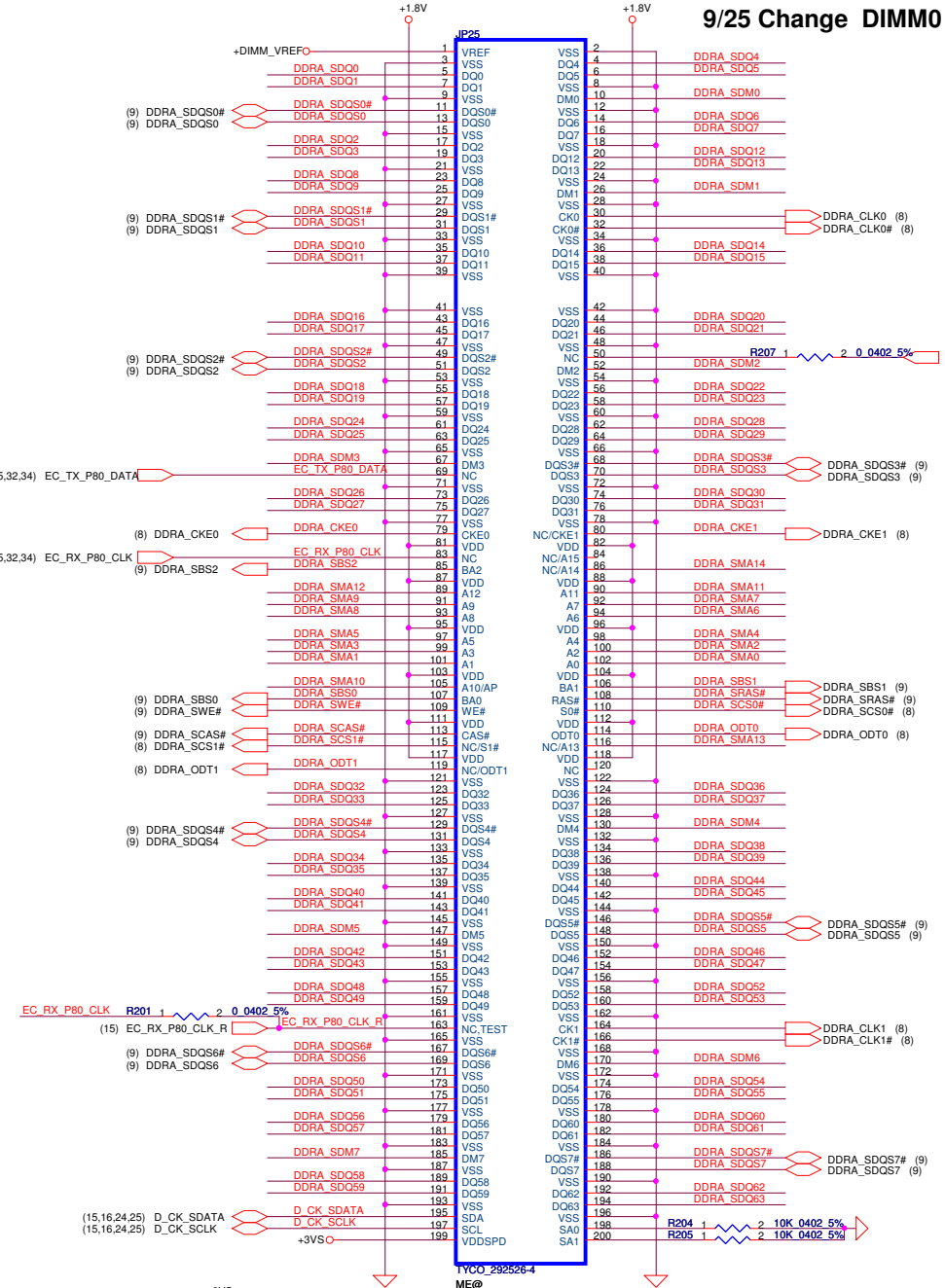

DIMM0 STD H:5.2mm (BOT)

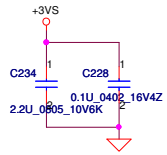

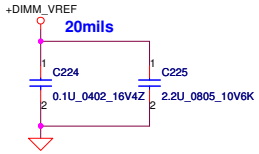

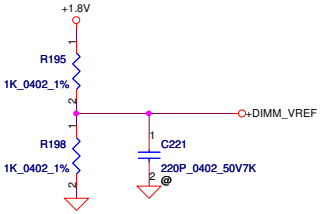

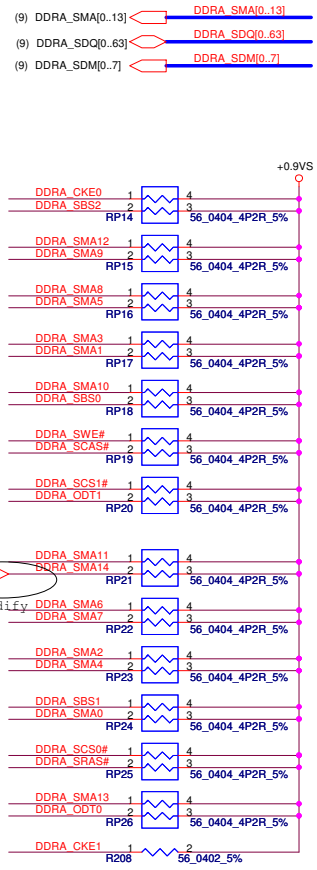

Layout Note:
Place these resistor closely JP35,all trace length Max=1.5"

Layout Note:
Place near JP35

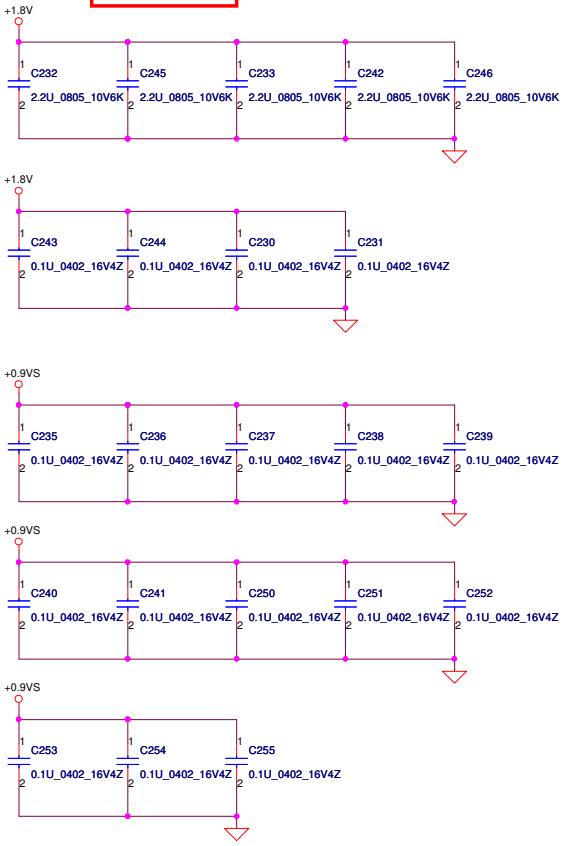

Layout Note:
Place one cap close to every 2 pullup resistors terminated to +0.9VS

Security Classification	Compal Secret Data		
Issued Date	2006/08/18	Deciphered Date	2007/8/18

THIS SHEET OF ENGINEERING DRAWING IS THE PROPRIETARY PROPERTY OF COMPAL ELECTRONICS, INC. AND CONTAINS CONFIDENTIAL AND TRADE SECRET INFORMATION. THIS SHEET MAY NOT BE TRANSFERED FROM THE CUSTODY OF THE COMPETENT DIVISION OF R&D DEPARTMENT EXCEPT AS AUTHORIZED BY COMPAL ELECTRONICS, INC. NEITHER THIS SHEET NOR THE INFORMATION IT CONTAINS MAY BE USED BY OR DISCLOSED TO ANY THIRD PARTY WITHOUT PRIOR WRITTEN CONSENT OF COMPAL ELECTRONICS, INC.

Compal Electronics, Inc.

Title: DDRII-SODIMM0

Size	Document Number	Rev
B	LA-3861P	0.1

Date: Monday, August 20, 2007 | Sheet 14 of 47

9/25 Change DIMM1 to SP070006F00

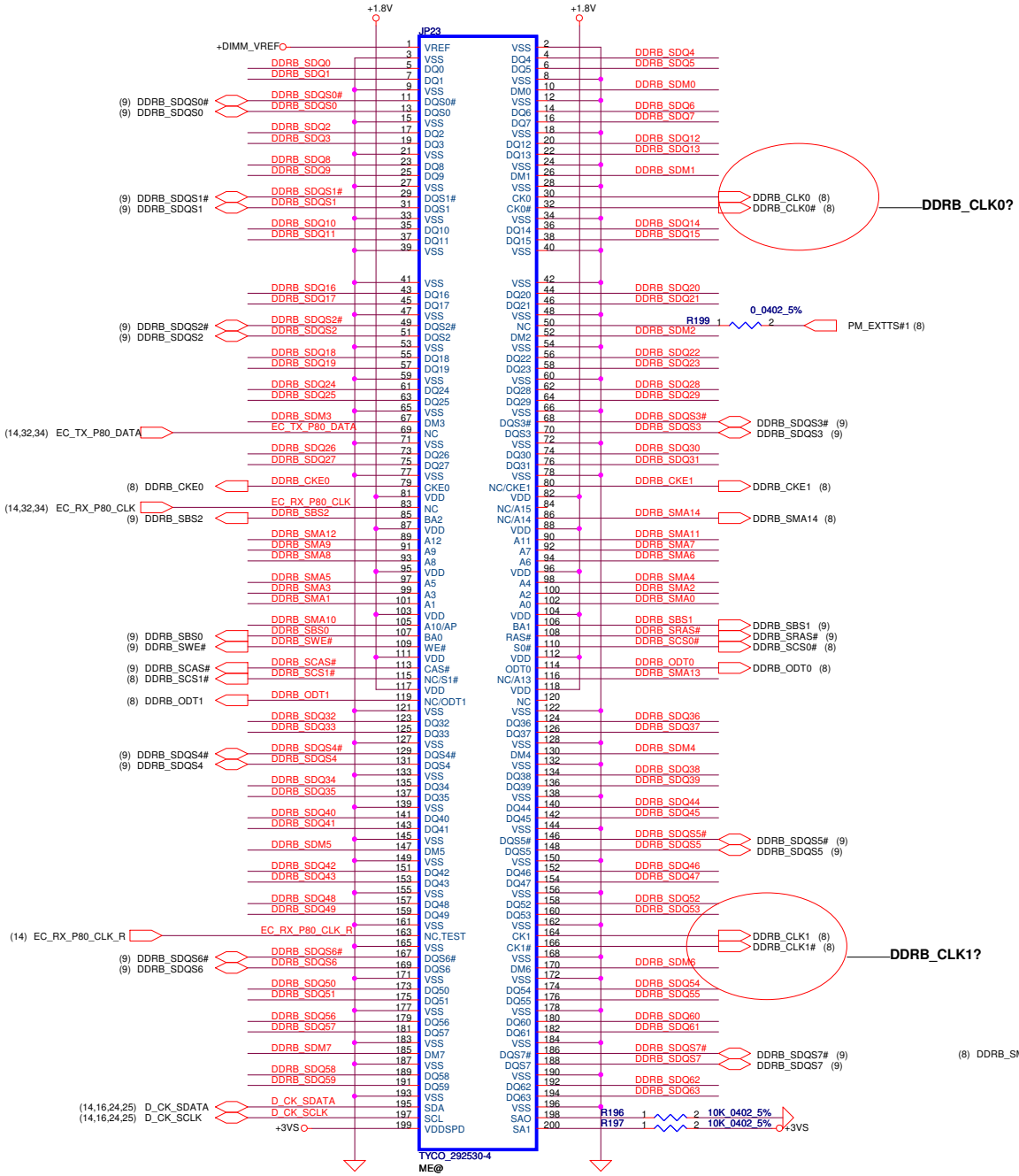

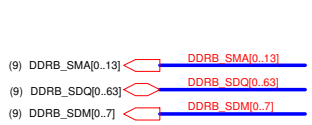

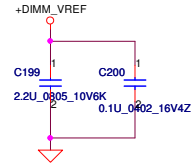

Layout Note:
Place near JP34

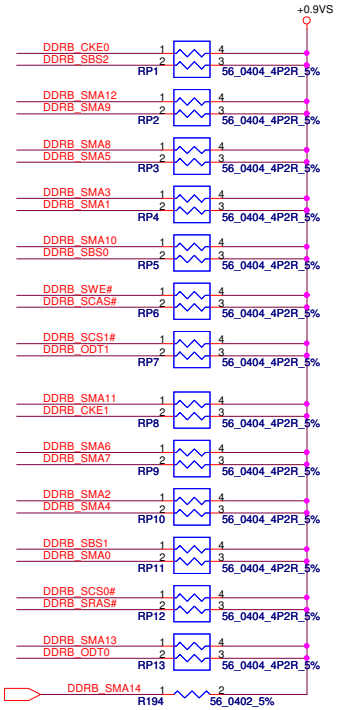

Layout Note:
Place these resistor closely JP35,all trace length Max=1.5"

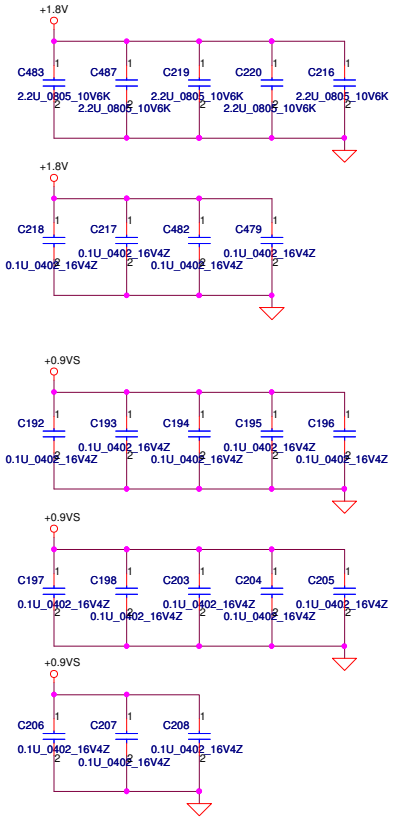

Layout Note:
Place one cap close to every 2 pullup resistors terminated to +0.9VS

DIMM1 STD H:9.2mm (BOT)

Security Classification	Compal Secret Data		
Issued Date	2006/08/18	Deciphered Date	2007/8/18

THIS SHEET OF ENGINEERING DRAWING IS THE PROPRIETARY PROPERTY OF COMPAL ELECTRONICS, INC. AND CONTAINS CONFIDENTIAL AND TRADE SECRET INFORMATION. THIS SHEET MAY NOT BE TRANSFERED FROM THE CUSTODY OF THE COMPETENT DIVISION OF R&D DEPARTMENT EXCEPT AS AUTHORIZED BY COMPAL ELECTRONICS, INC. NEITHER THIS SHEET NOR THE INFORMATION IT CONTAINS MAY BE USED BY OR DISCLOSED TO ANY THIRD PARTY WITHOUT PRIOR WRITTEN CONSENT OF COMPAL ELECTRONICS, INC.

Compal Electronics, Inc.

Title: DDRII-SODIMM1

Size: B | Document Number: LA-3861P | Rev: 0.1

Date: Monday, August 20, 2007 | Sheet 15 of 47

FSLC CLKSEL2	FSLB CLKSEL1	FSLA CLKSEL0	CPU MHz	SRC MHz	PCI MHz
0	1	0	200	100	33.3
0	1	1	166	100	33.3

FSB Frequency Selet:

CPU Driven	Stuff						
* (Default)	No Stuff	R401	R408	R417	R430	R438	R447
667MHz	Stuff	R401	R417	R447			
	No Stuff	R408	R430	R438			
800MHz	Stuff	R408	R417	R447			
	No Stuff	R401	R430	R438			

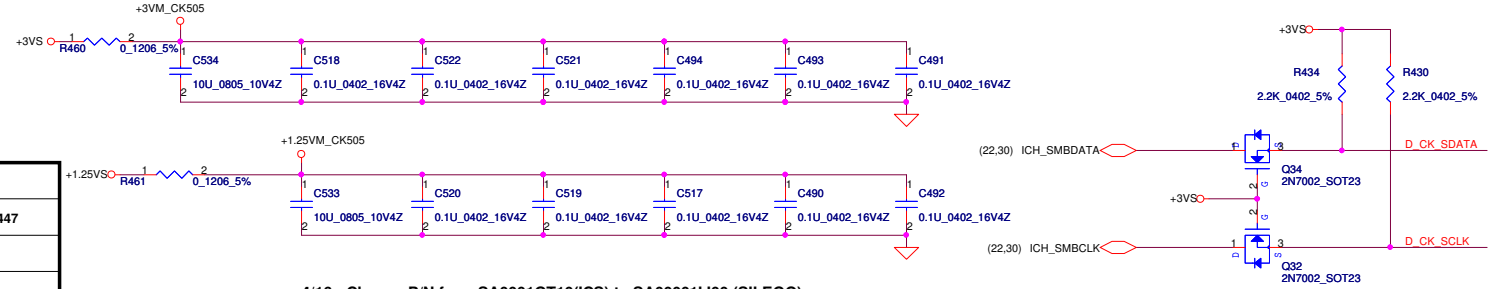

4/16 : Change P/N from SA0001GT10(ICS) to SA00001IJ00 (SILEGO)

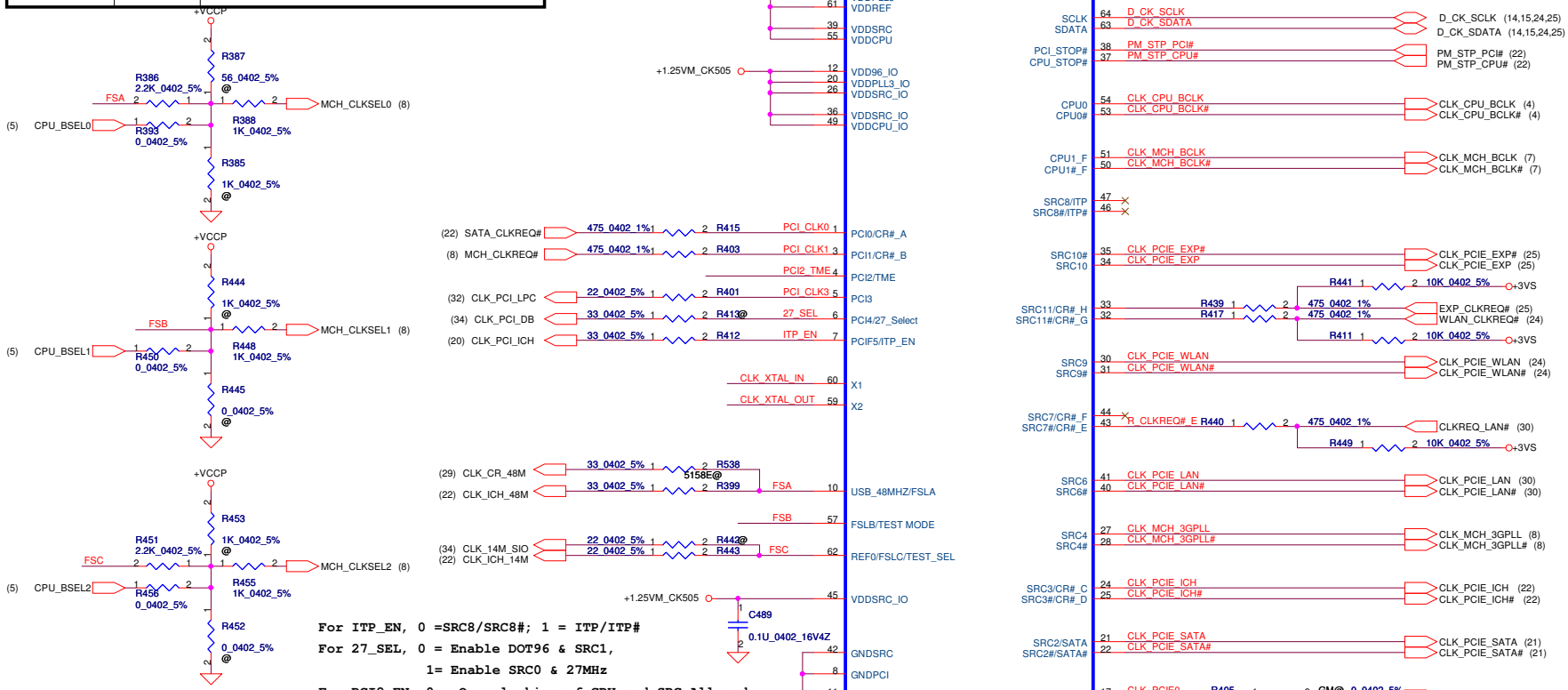

For ITP_EN, 0 =SRC8/SRC8#; 1 = ITP/ITP#
For 27_SEL, 0 = Enable DOT96 & SRC1,
1= Enable SRC0 & 27MHz
For PCI2_EN, 0 = Overclocking of CPU and SRC Allowed
1 = Overclocking of CPU and SRC NOT allowed

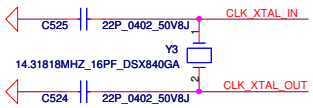

Routing the trace at least 10mil

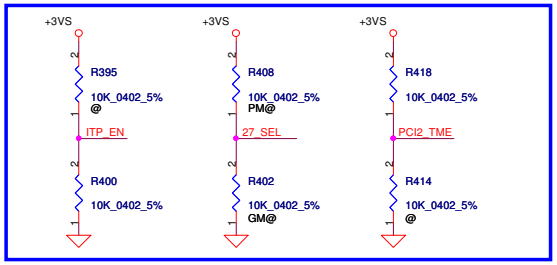

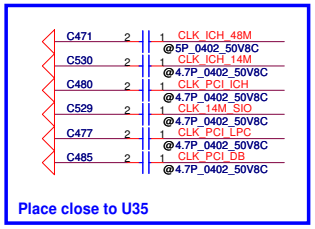

Place close to U35

<BOM Structure>

* Internal Pull-Up Resistor
* Internal Pull-Down Resistor

ICS9LPRS365/SA00001GT00

Security Classification	Compal Secret Data		
Issued Date	2006/08/04	Deciphered Date	2006/10/06

THIS SHEET OF ENGINEERING DRAWING IS THE PROPRIETARY PROPERTY OF COMPAL ELECTRONICS, INC. AND CONTAINS CONFIDENTIAL AND TRADE SECRET INFORMATION. THIS SHEET MAY NOT BE TRANSFERED FROM THE CUSTODY OF THE COMPETENT DIVISION OF R&D DEPARTMENT EXCEPT AS AUTHORIZED BY COMPAL ELECTRONICS, INC. NEITHER THIS SHEET NOR THE INFORMATION IT CONTAINS MAY BE USED BY OR DISCLOSED TO ANY THIRD PARTY WITHOUT PRIOR WRITTEN CONSENT OF COMPAL ELECTRONICS, INC.

Compal Electronics, Inc.

Title: Clock generator

Size: | Document Number: LA-3861P | Rev: 0.1

Date: Monday, August 20, 2007 | Sheet 16 of 47

MAX. 4.06A @ 1.8V

MAX. 130mA @ 2.5V

MAX. 655mA @ 3.3V

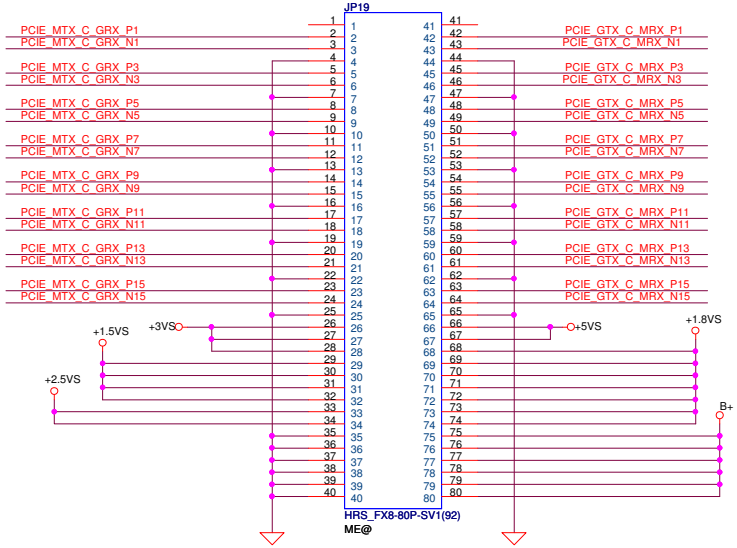

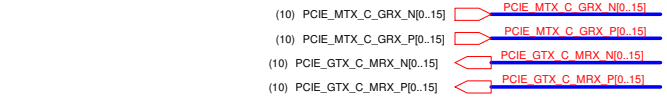

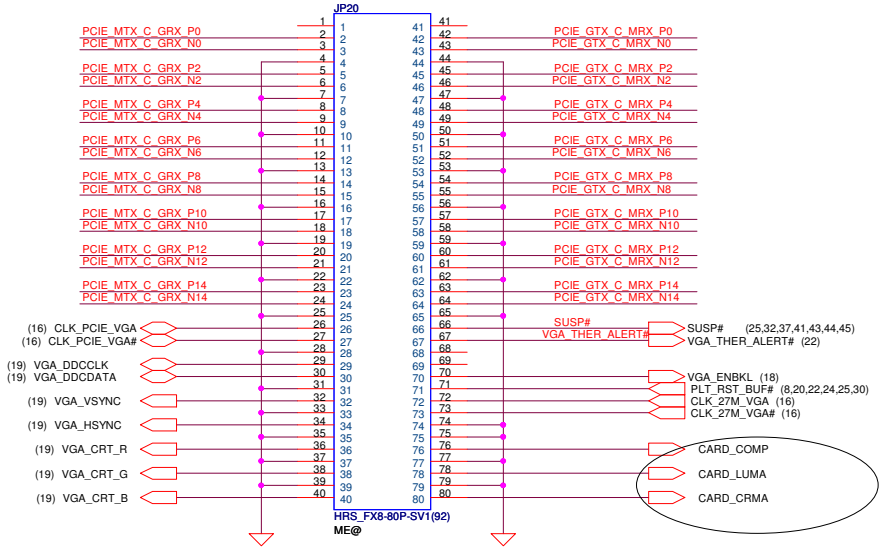

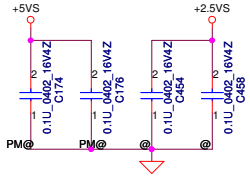

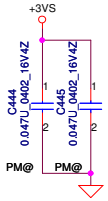

THIS SHEET OF ENGINEERING DRAWING IS THE PROPRIETARY PROPERTY OF COMPAL ELECTRONICS, INC. AND CONTAINS CONFIDENTIAL AND TRADE SECRET INFORMATION. THIS SHEET MAY NOT BE TRANSFERED FROM THE CUSTODY OF THE COMPETENT DIVISION OF R&D DEPARTMENT EXCEPT AS AUTHORIZED BY COMPAL ELECTRONICS, INC. NEITHER THIS SHEET NOR THE INFORMATION IT CONTAINS MAY BE USED BY OR DISCLOSED TO ANY THIRD PARTY WITHOUT PRIOR WRITTEN CONSENT OF COMPAL ELECTRONICS, INC.

Compal Electronics, Inc.		
Title: VGA/B connector		
Size: Custom	Document Number: LA-3861P	Rev: 0.1
Date: Monday, August 20, 2007	Sheet 17 of 47	

LCD POWER CIRCUIT

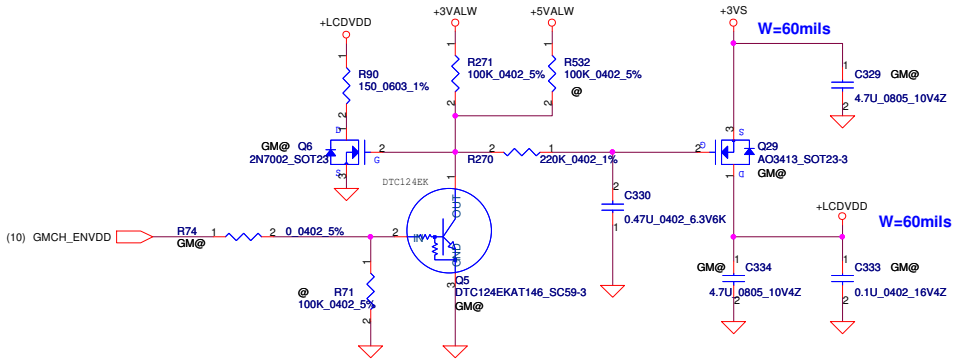

INVERTER Conn.

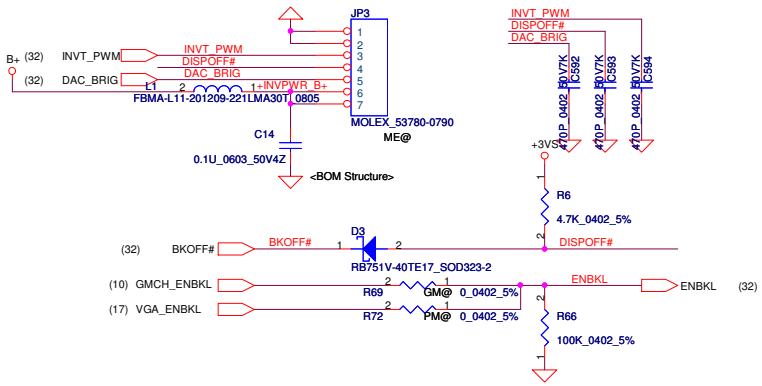

LCD/PANEL BD. Conn.

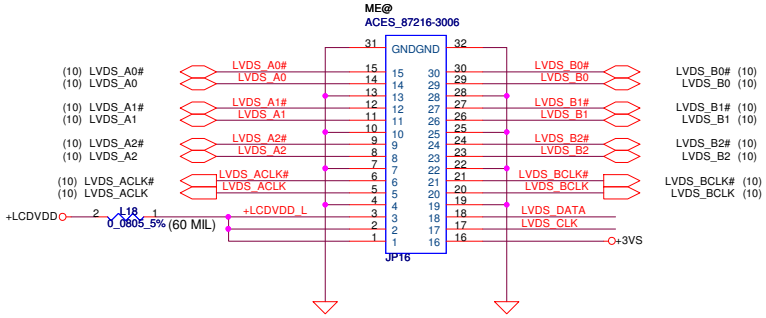

Follow HEL80's pin definition
Except pin 29

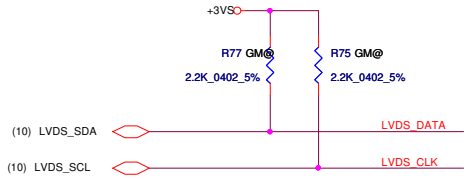

Security Classification	Compal Secret Data		
Issued Date	2006/08/18	Deciphered Date	2007/8/18

THIS SHEET OF ENGINEERING DRAWING IS THE PROPRIETARY PROPERTY OF COMPAL ELECTRONICS, INC. AND CONTAINS CONFIDENTIAL AND TRADE SECRET INFORMATION. THIS SHEET MAY NOT BE TRANSFERED FROM THE CUSTODY OF THE COMPETENT DIVISION OF R&D DEPARTMENT EXCEPT AS AUTHORIZED BY COMPAL ELECTRONICS, INC. NEITHER THIS SHEET NOR THE INFORMATION IT CONTAINS MAY BE USED BY OR DISCLOSED TO ANY THIRD PARTY WITHOUT PRIOR WRITTEN CONSENT OF COMPAL ELECTRONICS, INC.

Compal Electronics, Inc.

Title: LVDS & DVI Connector

Size: B | Document Number: LA-3861P | Rev: 0.1

Date: Monday, August 20, 2007 | Sheet 18 of 47

CRT Connector

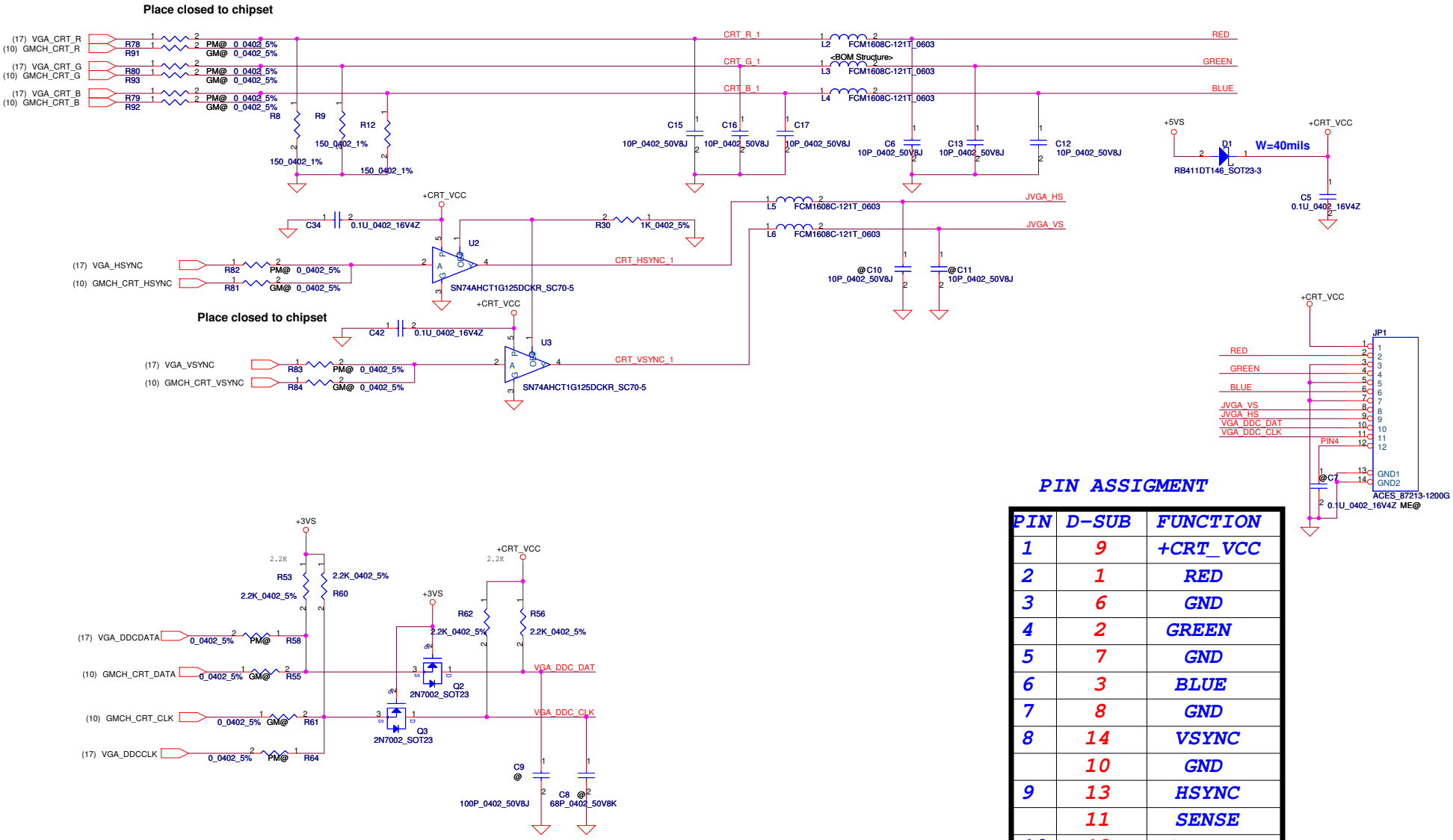

PIN ASSIGMENT

PIN	D-SUB	FUNCTION
1	9	+CRT_VCC
2	1	RED
3	6	GND
4	2	GREEN
5	7	GND
6	3	BLUE
7	8	GND
8	14	VSYNC
	10	GND
9	13	HSYNC
	11	SENSE
10	12	SM_DAT
11	15	SM_CLK
12	4	PIN4

Security Classification	Compal Secret Data		
Issued Date	2006/08/18	Deciphered Date	2007/8/18

THIS SHEET OF ENGINEERING DRAWING IS THE PROPRIETARY PROPERTY OF COMPAL ELECTRONICS, INC. AND CONTAINS CONFIDENTIAL AND TRADE SECRET INFORMATION. THIS SHEET MAY NOT BE TRANSFERED FROM THE CUSTODY OF THE COMPETENT DIVISION OF R&D DEPARTMENT EXCEPT AS AUTHORIZED BY COMPAL ELECTRONICS, INC. NEITHER THIS SHEET NOR THE INFORMATION IT CONTAINS MAY BE USED BY OR DISCLOSED TO ANY THIRD PARTY WITHOUT PRIOR WRITTEN CONSENT OF COMPAL ELECTRONICS, INC.

Compal Electronics, Inc.

Title: CRT & TV-OUT Connector

Size: B | Document Number: LA-3861P | Rev: 0.1

Date: Monday, August 20, 2007 | Sheet 19 of 47

10/17 : Change P/N from SA000010G00 to SA00001JU10

10/17 : FootPrint : SA000010G00
BOM : SA00001JU10

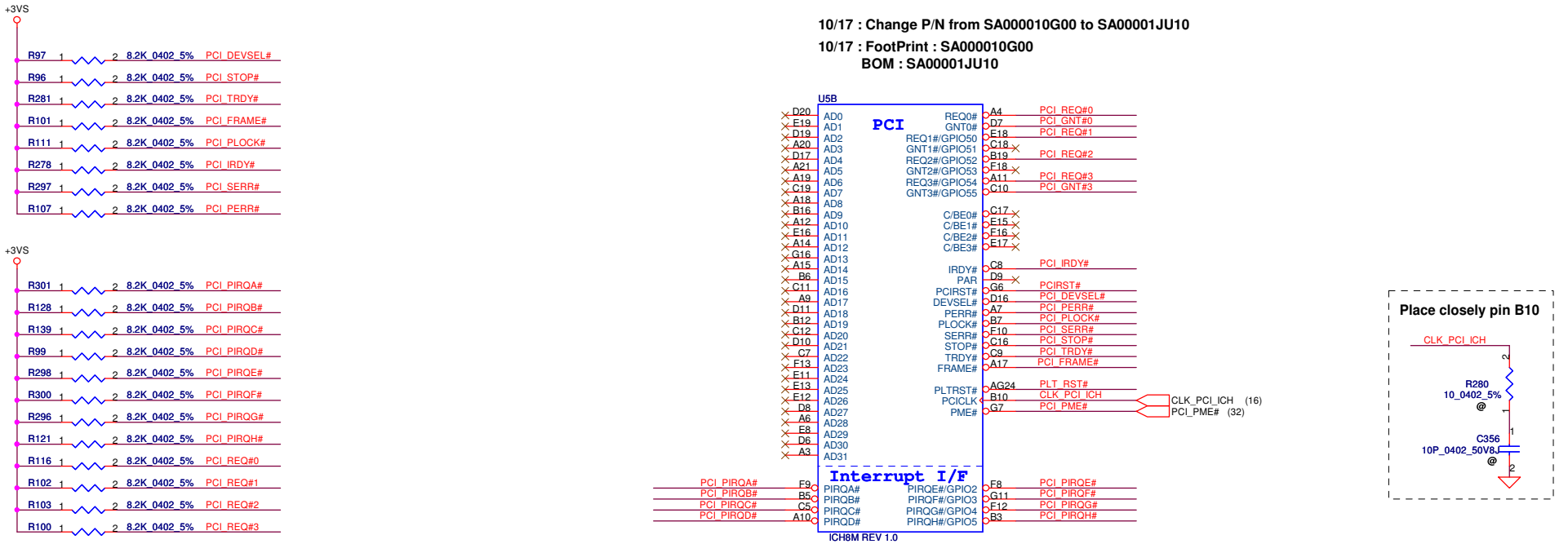

A16 Swap Override Strap	
PCI_GNT#3	Low= A16 swap override Enable High= Default*

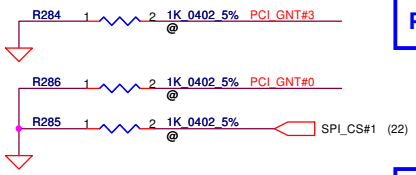

Boot BIOS Strap		
PCI_GNT#0	SPI_CS#1	Boot BIOS Loaction
0	1	SPI
1	0	PCI
1	1	LPC*

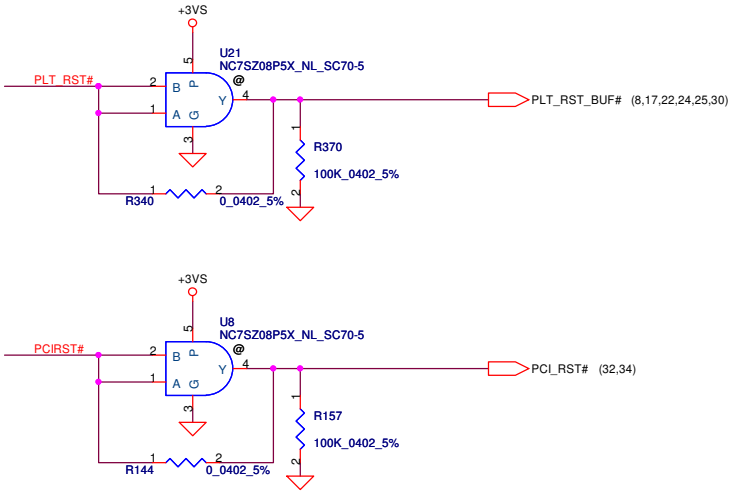

Security Classification	Compal Secret Data		
Issued Date	2006/08/18	Deciphered Date	2007/8/18

THIS SHEET OF ENGINEERING DRAWING IS THE PROPRIETARY PROPERTY OF COMPAL ELECTRONICS, INC. AND CONTAINS CONFIDENTIAL AND TRADE SECRET INFORMATION. THIS SHEET MAY NOT BE TRANSFERED FROM THE CUSTODY OF THE COMPETENT DIVISION OF R&D DEPARTMENT EXCEPT AS AUTHORIZED BY COMPAL ELECTRONICS, INC. NEITHER THIS SHEET NOR THE INFORMATION IT CONTAINS MAY BE USED BY OR DISCLOSED TO ANY THIRD PARTY WITHOUT PRIOR WRITTEN CONSENT OF COMPAL ELECTRONICS, INC.

Compal Electronics, Inc.

Title: ICH8M(1/4)-PCI

Size | Document Number: LA-3861P | Rev: 0.1

Date: Monday, August 20, 2007 | Sheet 20 of 47

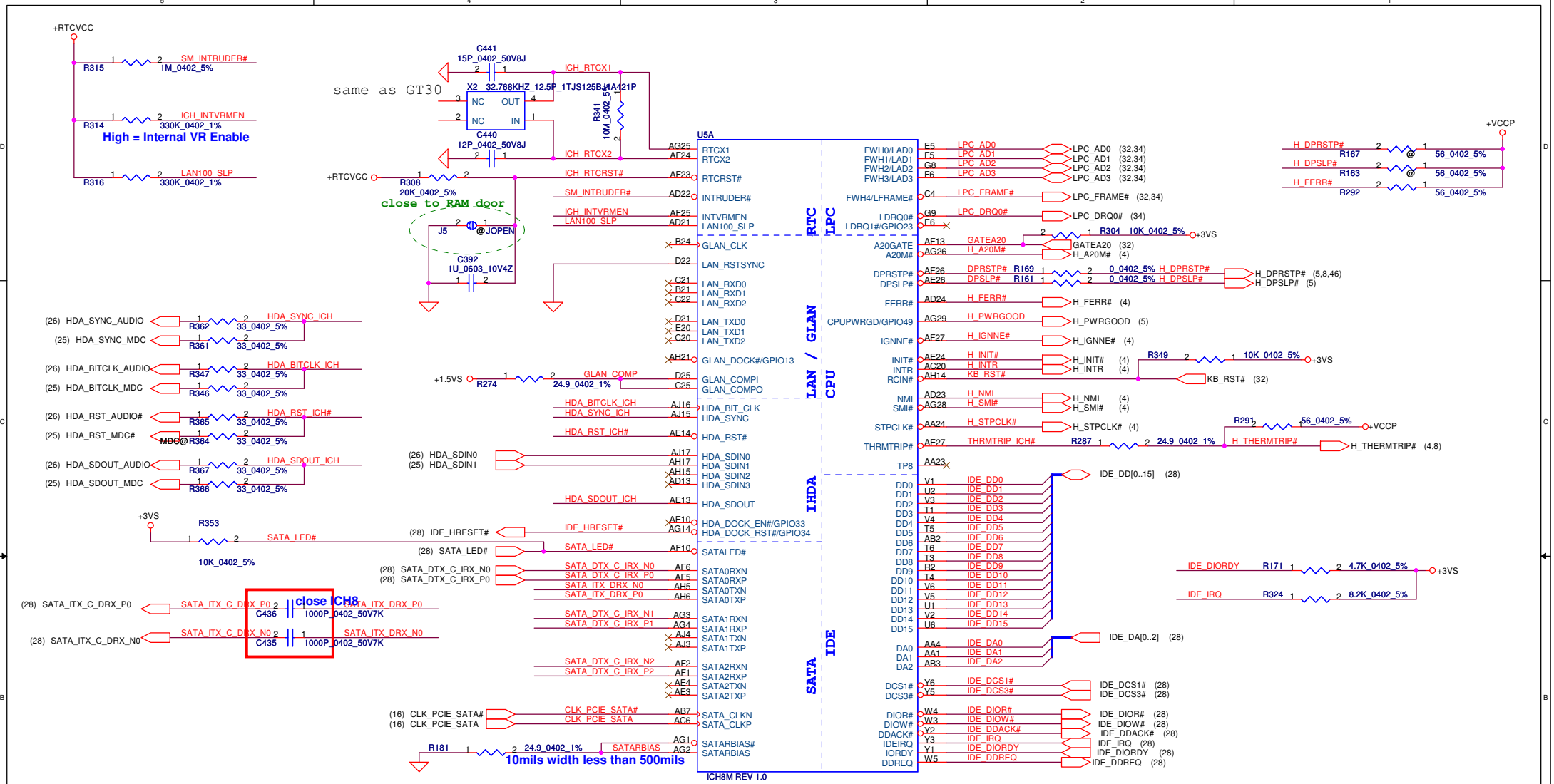

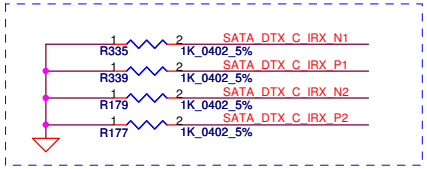

SATA_RXn/p need tie to ground when SATA port no used

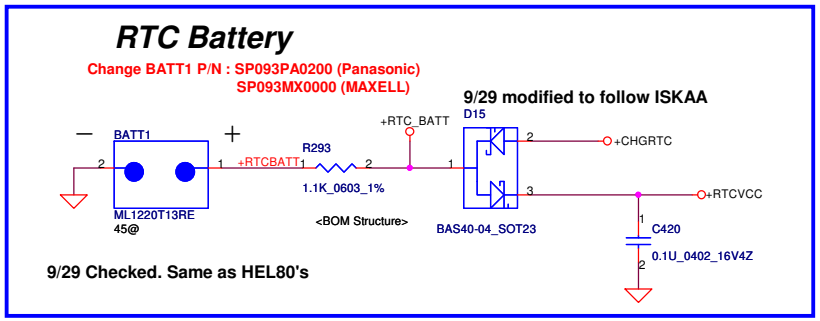

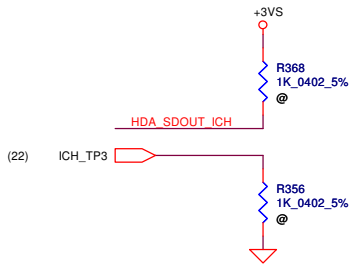

XOR Chain Entrance Strap		
ICH_TP3	HDA_SDOUT	Description
0	0	RSVD
0	1	Enter XOR Chain
1	0	Normal Operation
1	1	Set PCIE port config bit 1

Security Classification	Compal Secret Data		
Issued Date	2006/08/18	Deciphered Date	2007/8/18

THIS SHEET OF ENGINEERING DRAWING IS THE PROPRIETARY PROPERTY OF COMPAL ELECTRONICS, INC. AND CONTAINS CONFIDENTIAL AND TRADE SECRET INFORMATION. THIS SHEET MAY NOT BE TRANSFERED FROM THE CUSTODY OF THE COMPETENT DIVISION OF R&D DEPARTMENT EXCEPT AS AUTHORIZED BY COMPAL ELECTRONICS, INC. NEITHER THIS SHEET NOR THE INFORMATION IT CONTAINS MAY BE USED BY OR DISCLOSED TO ANY THIRD PARTY WITHOUT PRIOR WRITTEN CONSENT OF COMPAL ELECTRONICS, INC.

Compal Electronics, Inc.

Title: ICH8M(2/4)-LAN,IDELPC,RTC

Size: B | Document Number: LA-3861P | Rev: 0.1

Date: Monday, August 20, 2007 | Sheet 21 of 47

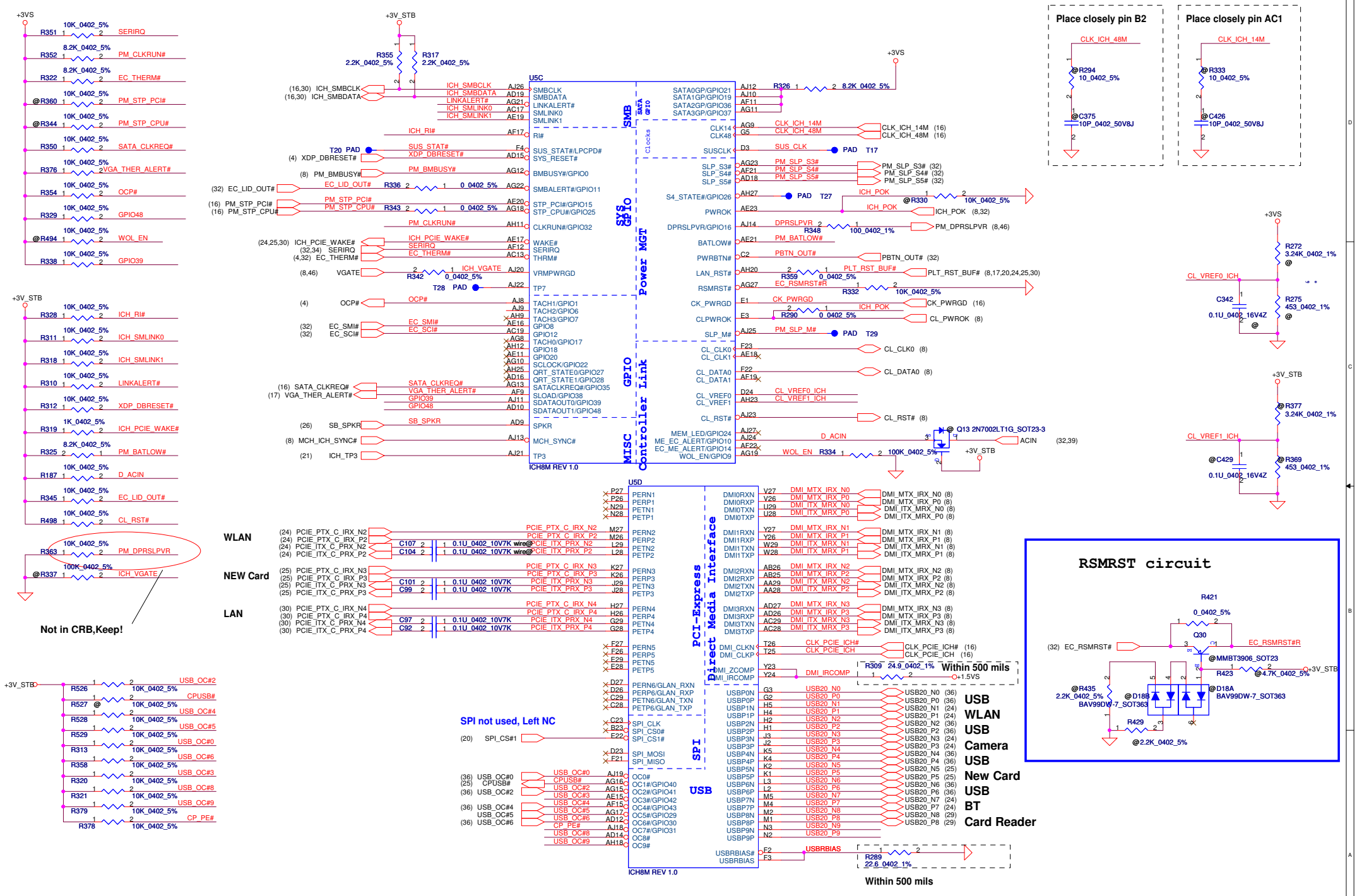

Security Classification	Compal Secret Data		
Issued Date	2006/08/18	Deciphered Date	2007/8/18

THIS SHEET OF ENGINEERING DRAWING IS THE PROPRIETARY PROPERTY OF COMPAL ELECTRONICS, INC. AND CONTAINS CONFIDENTIAL AND TRADE SECRET INFORMATION. THIS SHEET MAY NOT BE TRANSFERED FROM THE CUSTODY OF THE COMPETENT DIVISION OF R&D DEPARTMENT EXCEPT AS AUTHORIZED BY COMPAL ELECTRONICS, INC. NEITHER THIS SHEET NOR THE INFORMATION IT CONTAINS MAY BE USED BY OR DISCLOSED TO ANY THIRD PARTY WITHOUT PRIOR WRITTEN CONSENT OF COMPAL ELECTRONICS, INC.

Compal Electronics, Inc.

Title: ICH8M(3/4)-USB,GPIO,PCIE

Size: Custom | Document Number: LA-3861P | Rev: 0.1

Date: Monday, August 20, 2007 | Sheet 22 of 47

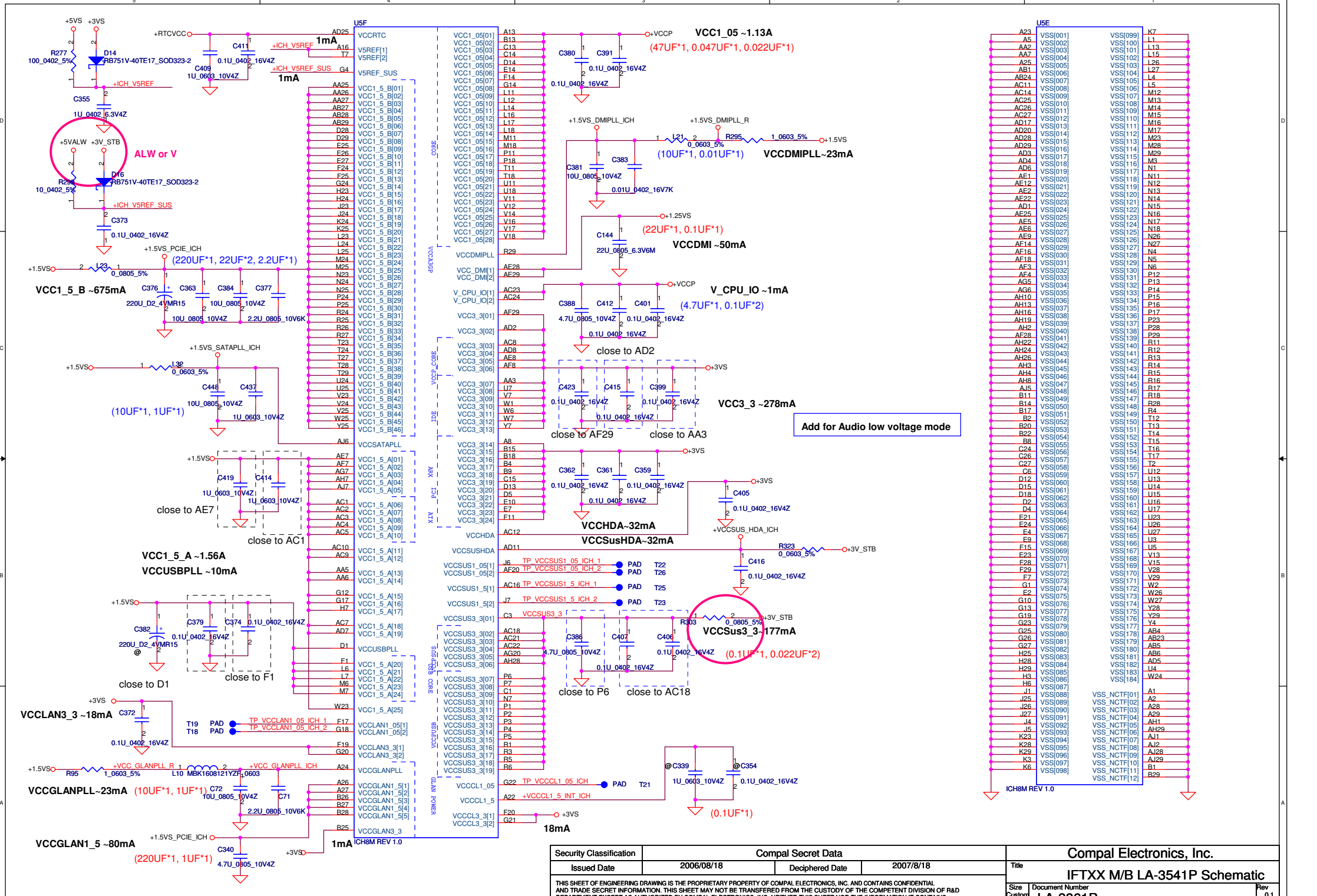

Security Classification	Compal Secret Data		
Issued Date	2006/08/18	Deciphered Date	2007/8/18

THIS SHEET OF ENGINEERING DRAWING IS THE PROPRIETARY PROPERTY OF COMPAL ELECTRONICS, INC. AND CONTAINS CONFIDENTIAL AND TRADE SECRET INFORMATION. THIS SHEET MAY NOT BE TRANSFERED FROM THE CUSTODY OF THE COMPETENT DIVISION OF R&D DEPARTMENT EXCEPT AS AUTHORIZED BY COMPAL ELECTRONICS, INC. NEITHER THIS SHEET NOR THE INFORMATION IT CONTAINS MAY BE USED BY OR DISCLOSED TO ANY THIRD PARTY WITHOUT PRIOR WRITTEN CONSENT OF COMPAL ELECTRONICS, INC.

Compal Electronics, Inc.

Title: IFTXX M/B LA-3541P Schematic

Size: Custom | Document Number: LA-3861P | Rev: 0.1

Date: Monday, August 20, 2007 | Sheet 23 of 47

Mini-Express Card for 3G Or TV Tuner
Mini-Express Card for WLAN

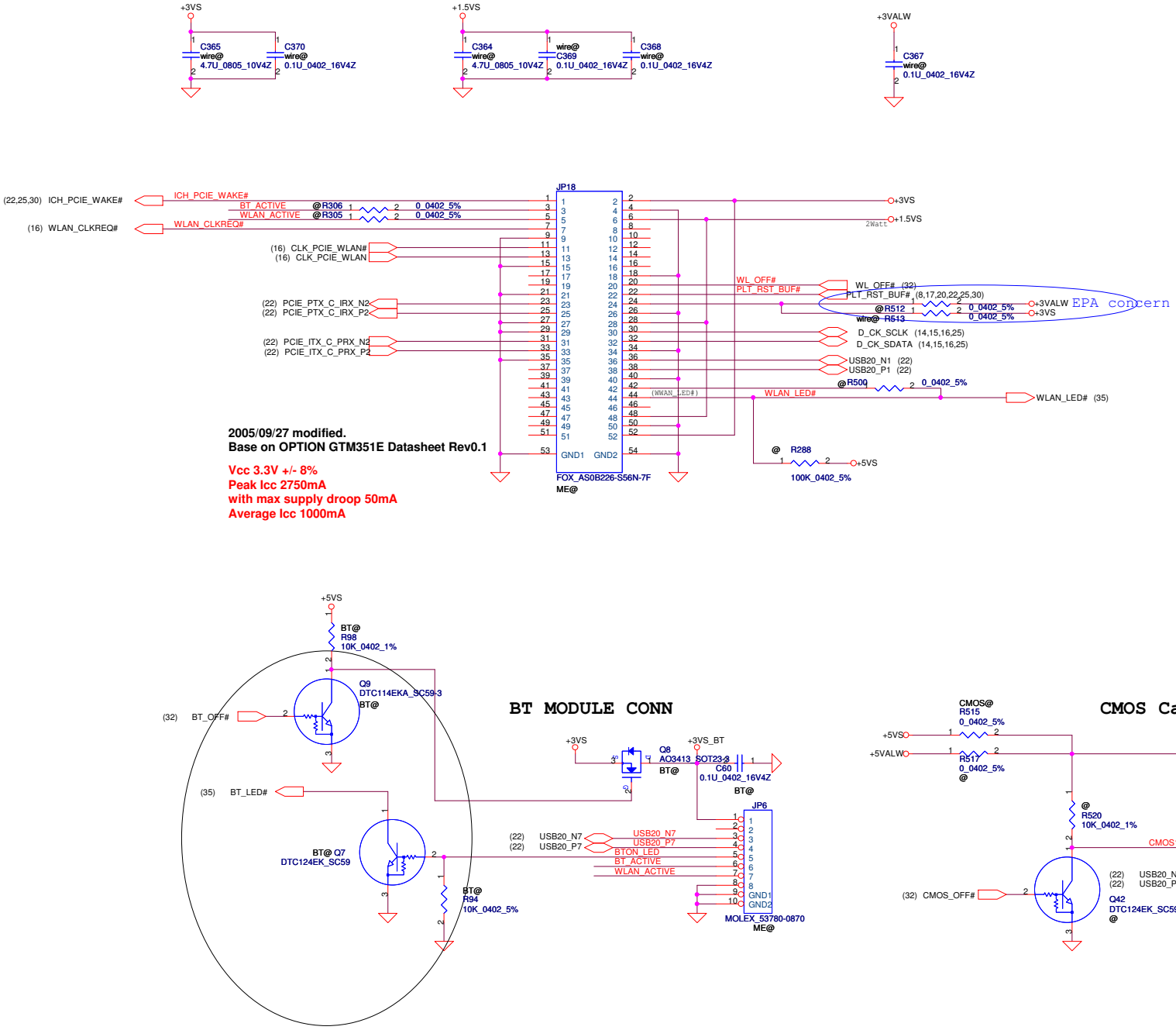

Security Classification	Compal Secret Data		
Issued Date	2006/08/05	Deciphered Date	2007/08/05

THIS SHEET OF ENGINEERING DRAWING IS THE PROPRIETARY PROPERTY OF COMPAL ELECTRONICS, INC. AND CONTAINS CONFIDENTIAL AND TRADE SECRET INFORMATION. THIS SHEET MAY NOT BE TRANSFERED FROM THE CUSTODY OF THE COMPETENT DIVISION OF R&D DEPARTMENT EXCEPT AS AUTHORIZED BY COMPAL ELECTRONICS, INC. NEITHER THIS SHEET NOR THE INFORMATION IT CONTAINS MAY BE USED BY OR DISCLOSED TO ANY THIRD PARTY WITHOUT PRIOR WRITTEN CONSENT OF COMPAL ELECTRONICS, INC.

Compal Electronics, Inc.

Title: **Mini-Card/3G/FeliCa/FP**

Size: | Document Number: LA-3861P | Rev: 0.1

Date: Monday, August 20, 2007 | Sheet 24 of 47

Express Card Power Switch

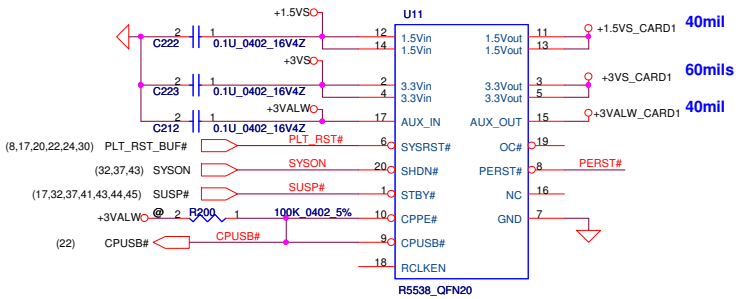

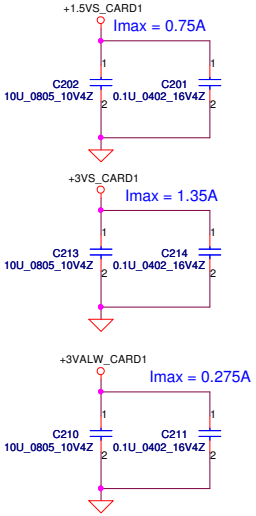

New Card Socket (Left/TOP)

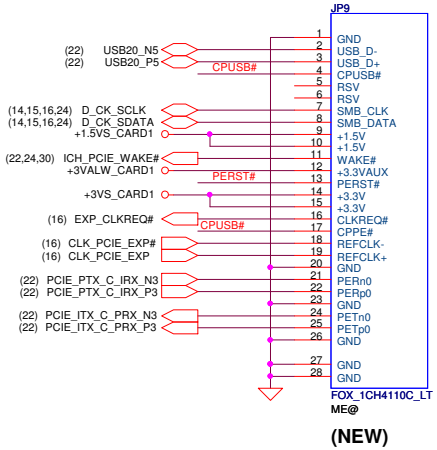

MDC CONN.

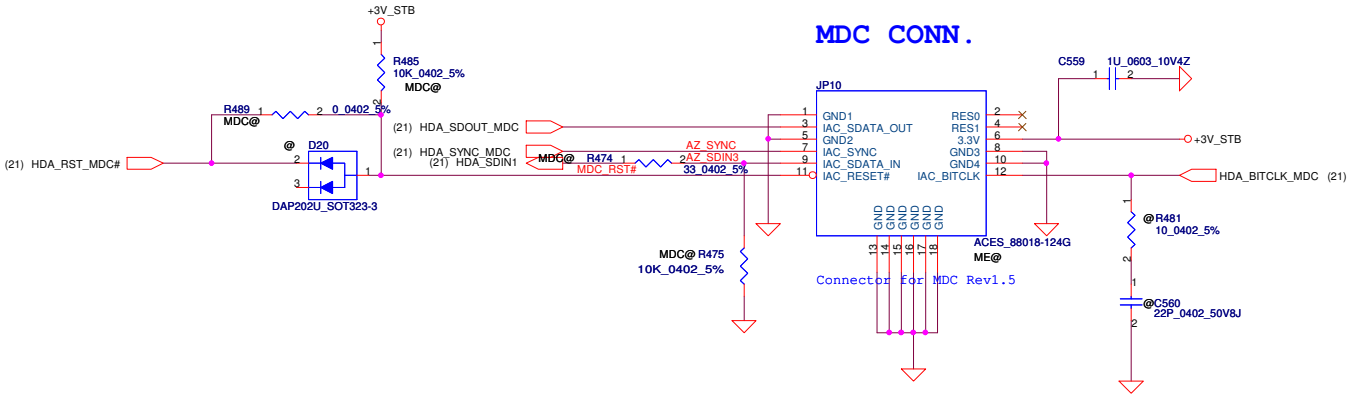

Security Classification	Compal Secret Data		
Issued Date	2006/08/18	Deciphered Date	2007/8/18

THIS SHEET OF ENGINEERING DRAWING IS THE PROPRIETARY PROPERTY OF COMPAL ELECTRONICS, INC. AND CONTAINS CONFIDENTIAL AND TRADE SECRET INFORMATION. THIS SHEET MAY NOT BE TRANSFERED FROM THE CUSTODY OF THE COMPETENT DIVISION OF R&D DEPARTMENT EXCEPT AS AUTHORIZED BY COMPAL ELECTRONICS, INC. NEITHER THIS SHEET NOR THE INFORMATION IT CONTAINS MAY BE USED BY OR DISCLOSED TO ANY THIRD PARTY WITHOUT PRIOR WRITTEN CONSENT OF COMPAL ELECTRONICS, INC.

Compal Electronics, Inc.

Title: NEW CARD & USB Connector

Size	Document Number	Rev
B	LA-3861P	0.1

Date: Monday, August 20, 2007 | Sheet 25 of 47

AC97 Codec

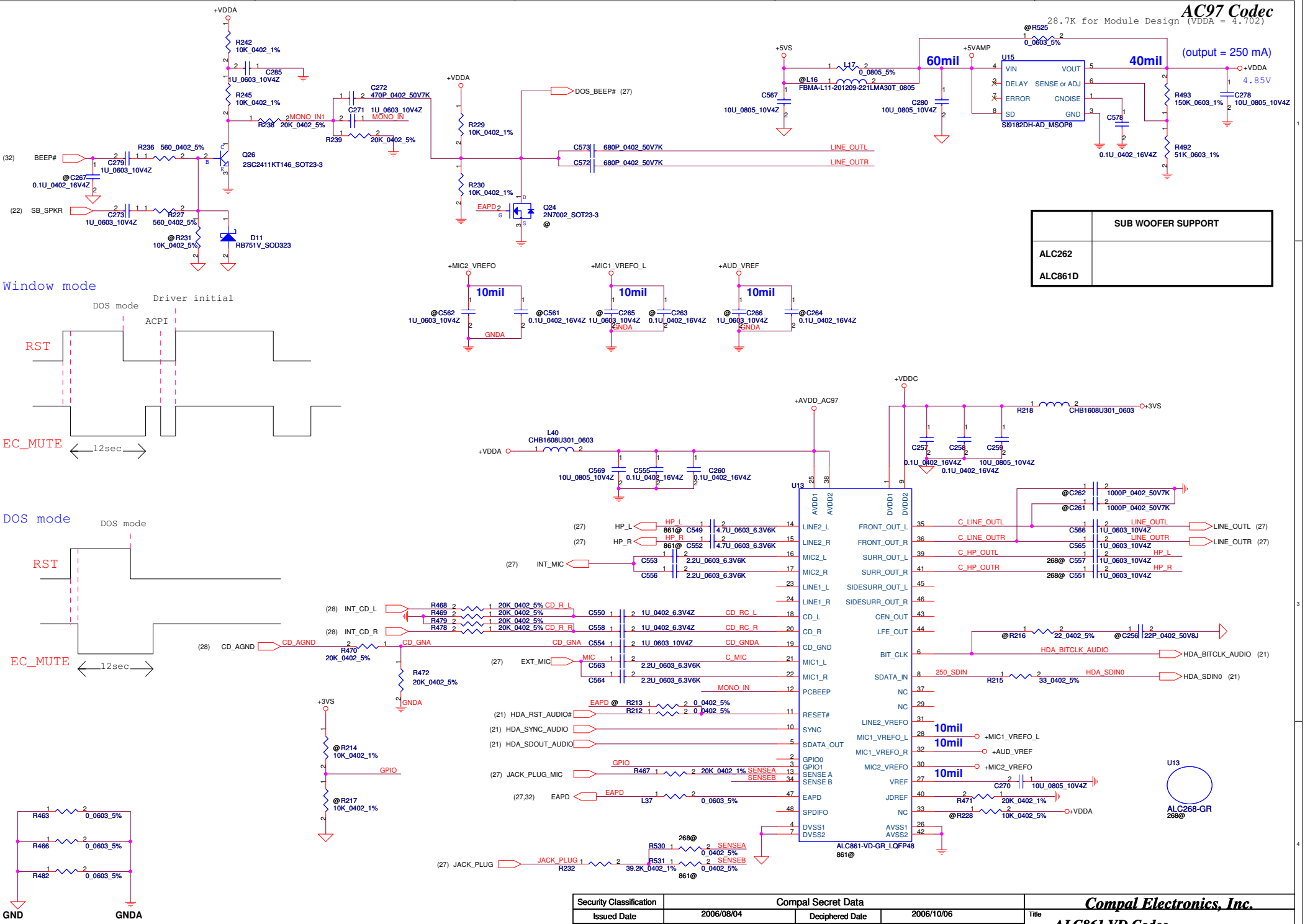

Security Classification	Compal Secret Data		
Issued Date	2006/08/04	Deciphered Date	2006/10/06

THIS SHEET OF ENGINEERING DRAWING IS THE PROPRIETARY PROPERTY OF COMPAL ELECTRONICS, INC. AND CONTAINS CONFIDENTIAL AND TRADE SECRET INFORMATION. THIS SHEET MAY NOT BE TRANSFERED FROM THE CUSTODY OF THE COMPETENT DIVISION OF R&D DEPARTMENT EXCEPT AS AUTHORIZED BY COMPAL ELECTRONICS, INC. NEITHER THIS SHEET NOR THE INFORMATION IT CONTAINS MAY BE USED BY OR DISCLOSED TO ANY THIRD PARTY WITHOUT PRIOR WRITTEN CONSENT OF COMPAL ELECTRONICS, INC.

Compal Electronics, Inc.

Title: **ALC861 VD Codec**

Size: Custom | Document Number: LA-3861P | Rev: 0.1

Date: Monday, August 20, 2007 | Sheet 26 of 47

APA2057A SPK/HP Amplifier

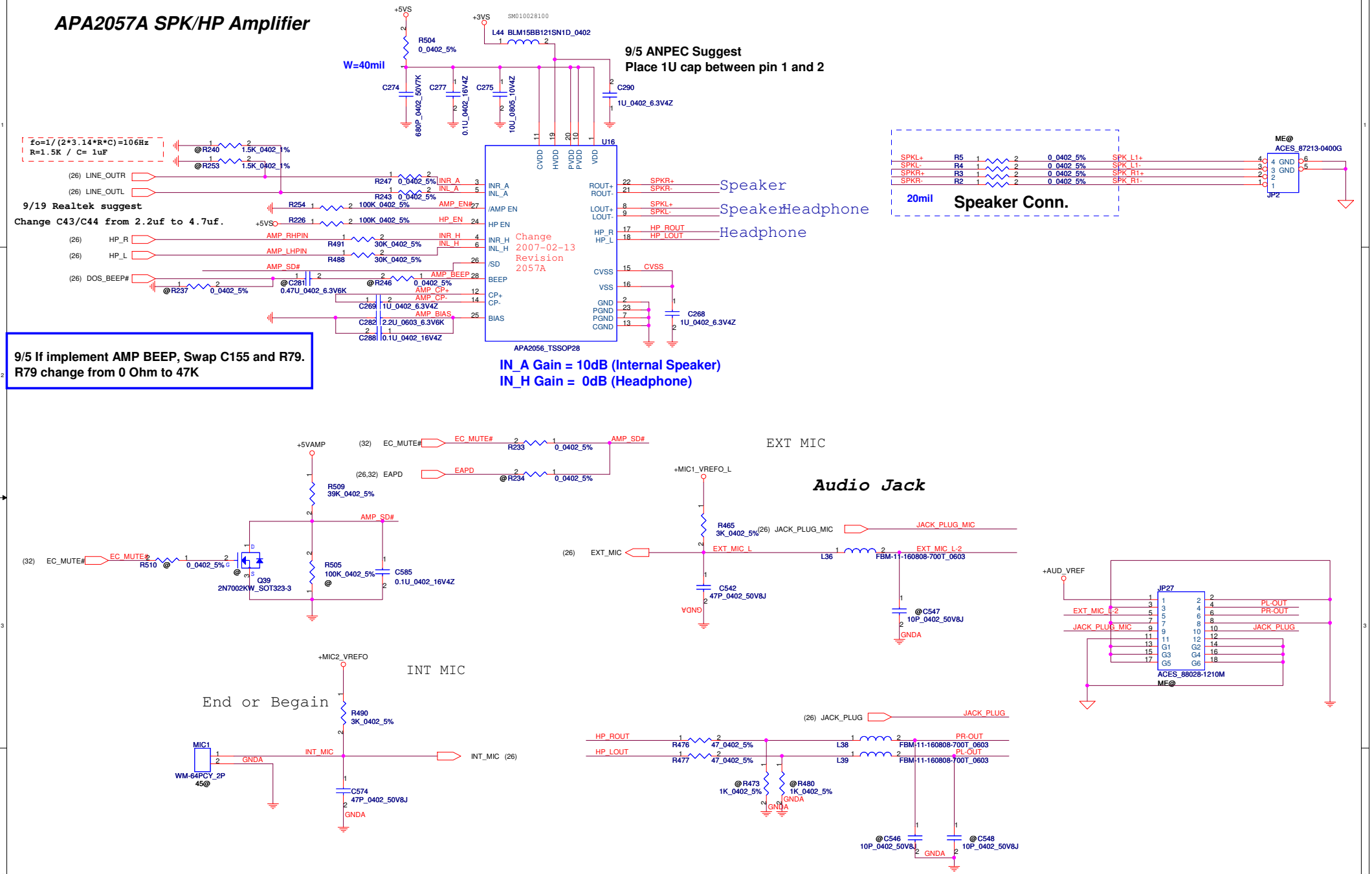

Security Classification	Compal Secret Data		
Issued Date	2006/08/05	Deciphered Date	2007/08/05

THIS SHEET OF ENGINEERING DRAWING IS THE PROPRIETARY PROPERTY OF COMPAL ELECTRONICS, INC. AND CONTAINS CONFIDENTIAL AND TRADE SECRET INFORMATION. THIS SHEET MAY NOT BE TRANSFERED FROM THE CUSTODY OF THE COMPETENT DIVISION OF R&D DEPARTMENT EXCEPT AS AUTHORIZED BY COMPAL ELECTRONICS, INC. NEITHER THIS SHEET NOR THE INFORMATION IT CONTAINS MAY BE USED BY OR DISCLOSED TO ANY THIRD PARTY WITHOUT PRIOR WRITTEN CONSENT OF COMPAL ELECTRONICS, INC.

Compal Electronics, Inc.

Title: AMP/VR/Audio Jack/MIC

Size: Custom | Document Number: LA-3861P | Rev: 0.1

Date: Monday, August 20, 2007 | Sheet 27 of 47

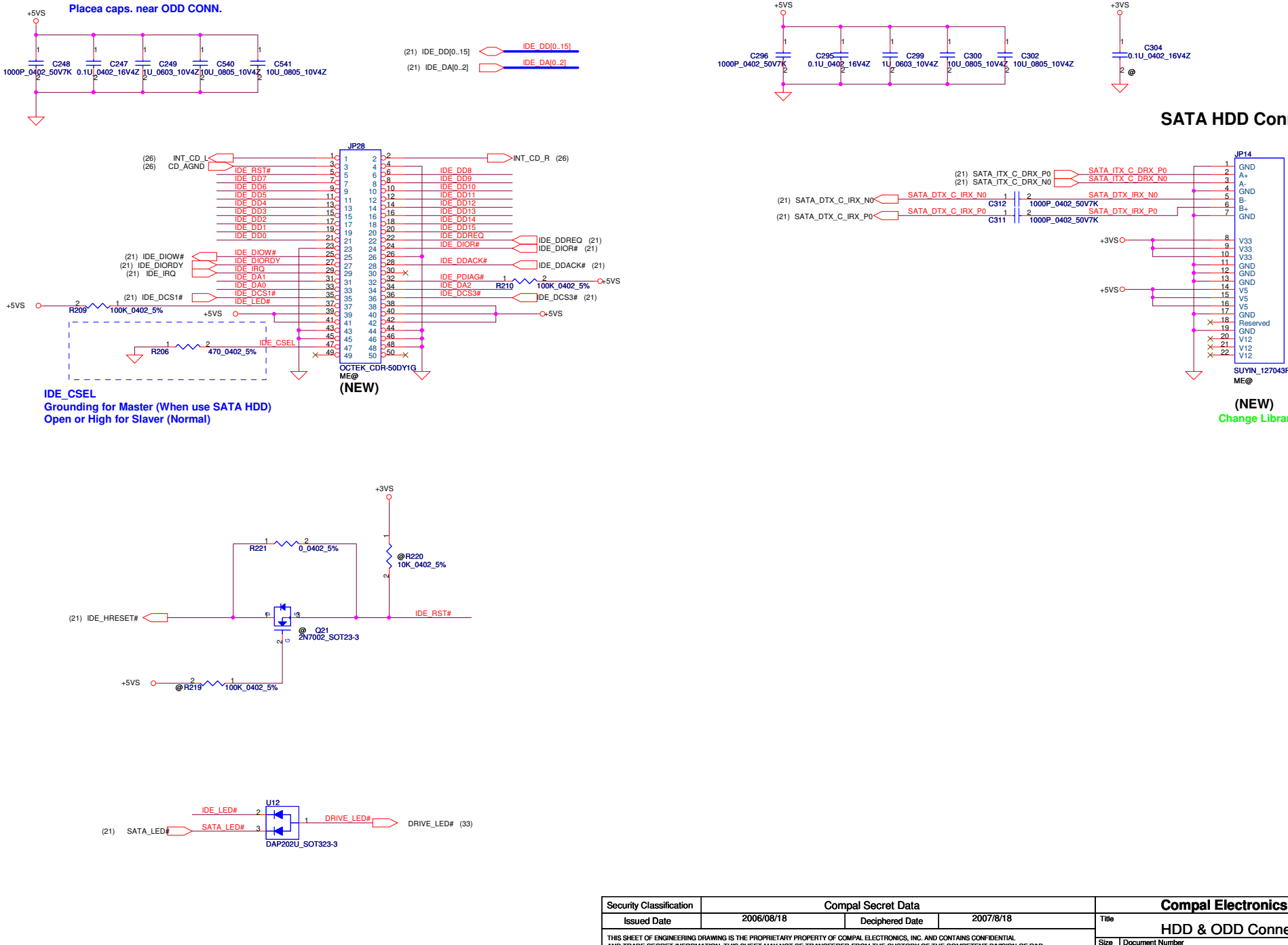

Security Classification	Compal Secret Data		
Issued Date	2006/08/18	Deciphered Date	2007/8/18

THIS SHEET OF ENGINEERING DRAWING IS THE PROPRIETARY PROPERTY OF COMPAL ELECTRONICS, INC. AND CONTAINS CONFIDENTIAL AND TRADE SECRET INFORMATION. THIS SHEET MAY NOT BE TRANSFERED FROM THE CUSTODY OF THE COMPETENT DIVISION OF R&D DEPARTMENT EXCEPT AS AUTHORIZED BY COMPAL ELECTRONICS, INC. NEITHER THIS SHEET NOR THE INFORMATION IT CONTAINS MAY BE USED BY OR DISCLOSED TO ANY THIRD PARTY WITHOUT PRIOR WRITTEN CONSENT OF COMPAL ELECTRONICS, INC.

Compal Electronics, Inc.

Title: HDD & ODD Connector

Size: B | Document Number: LA-3861P | Rev: 0.1

Date: Monday, August 20, 2007 | Sheet 28 of 47

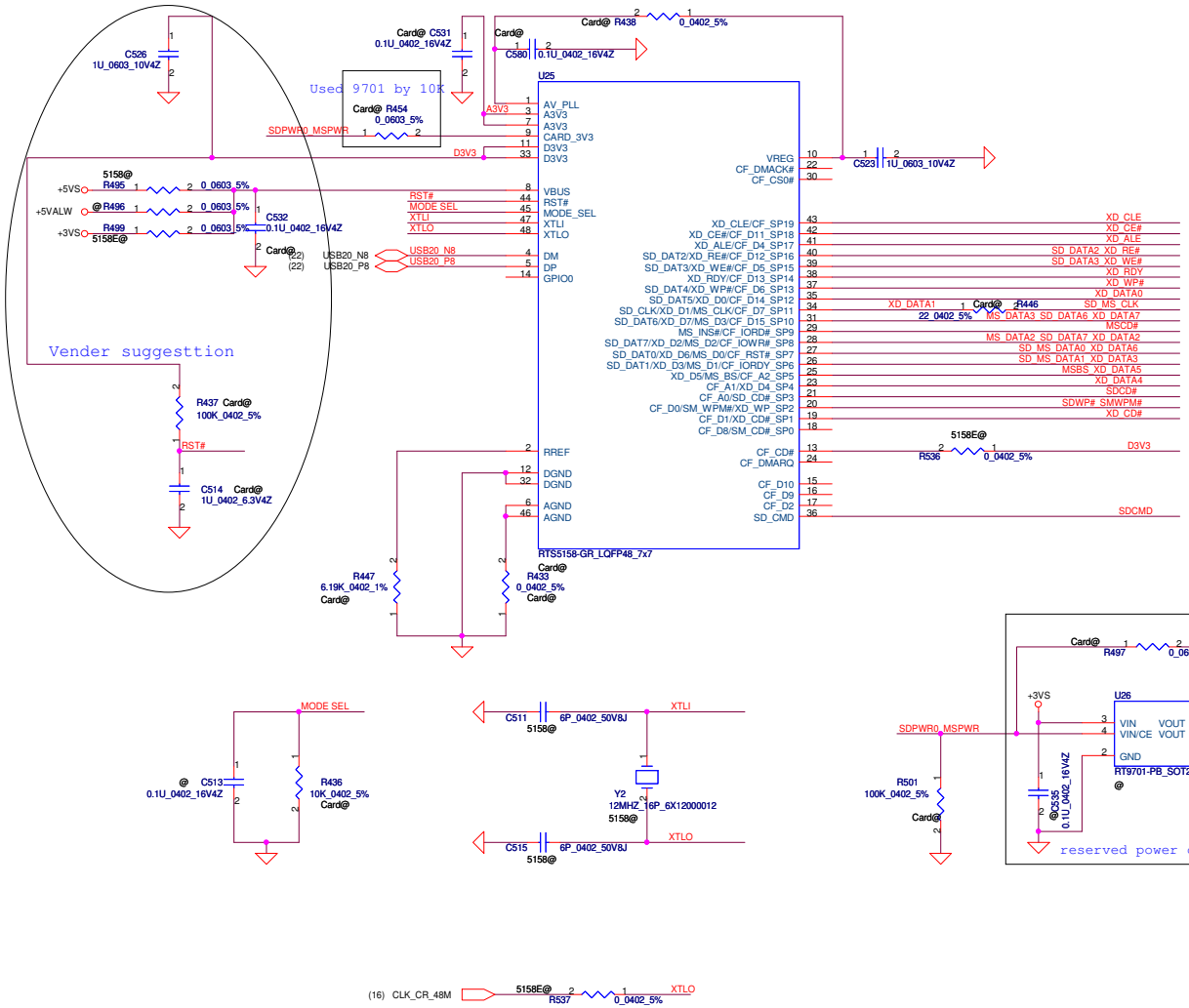

3 in 1 Card Reader

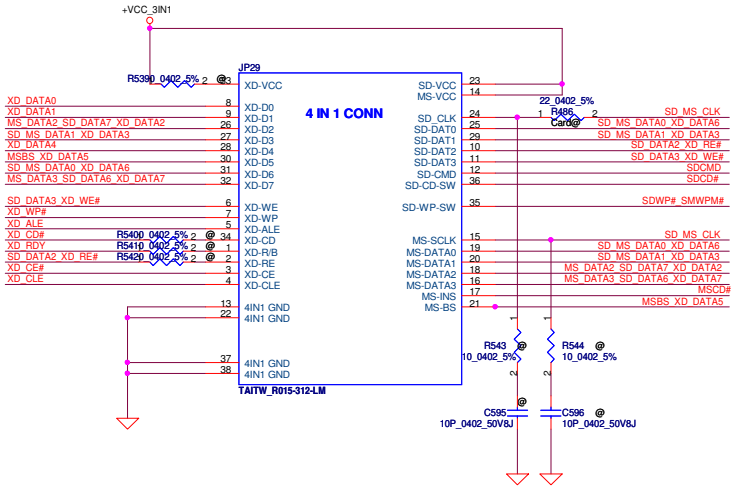

Security Classification	Compal Secret Data		
Issued Date	2006/08/04	Deciphered Date	2006/10/06

THIS SHEET OF ENGINEERING DRAWING IS THE PROPRIETARY PROPERTY OF COMPAL ELECTRONICS, INC. AND CONTAINS CONFIDENTIAL AND TRADE SECRET INFORMATION. THIS SHEET MAY NOT BE TRANSFERED FROM THE CUSTODY OF THE COMPETENT DIVISION OF R&D DEPARTMENT EXCEPT AS AUTHORIZED BY COMPAL ELECTRONICS, INC. NEITHER THIS SHEET NOR THE INFORMATION IT CONTAINS MAY BE USED BY OR DISCLOSED TO ANY THIRD PARTY WITHOUT PRIOR WRITTEN CONSENT OF COMPAL ELECTRONICS, INC.

Compal Electronics, Inc.

Title: **1394+3 in 1 Card**

Size	Document Number	Rev
Custom	LA-3861P	0.1

Date: Monday, August 20, 2007 | Sheet 29 of 47

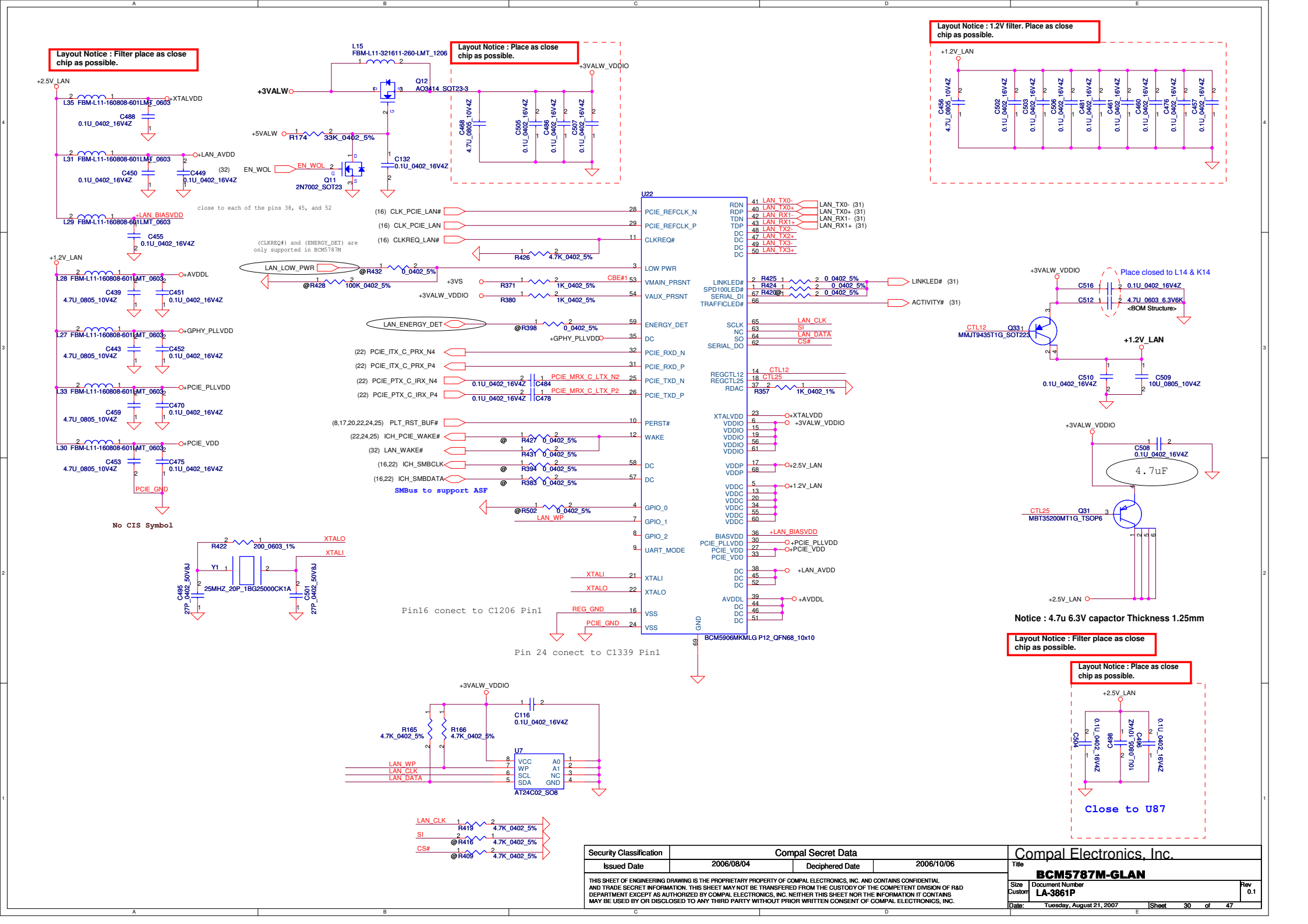

Security Classification	Compal Secret Data		
Issued Date	2006/08/04	Deciphered Date	2006/10/06

THIS SHEET OF ENGINEERING DRAWING IS THE PROPRIETARY PROPERTY OF COMPAL ELECTRONICS, INC. AND CONTAINS CONFIDENTIAL AND TRADE SECRET INFORMATION. THIS SHEET MAY NOT BE TRANSFERED FROM THE CUSTODY OF THE COMPETENT DIVISION OF R&D DEPARTMENT EXCEPT AS AUTHORIZED BY COMPAL ELECTRONICS, INC. NEITHER THIS SHEET NOR THE INFORMATION IT CONTAINS MAY BE USED BY OR DISCLOSED TO ANY THIRD PARTY WITHOUT PRIOR WRITTEN CONSENT OF COMPAL ELECTRONICS, INC.

Compal Electronics, Inc.

Title: **BCM5787M-GLAN**

Size: Custom | Document Number: **LA-3861P** | Rev: 0.1

Date: Tuesday, August 21, 2007 | Sheet 30 of 47

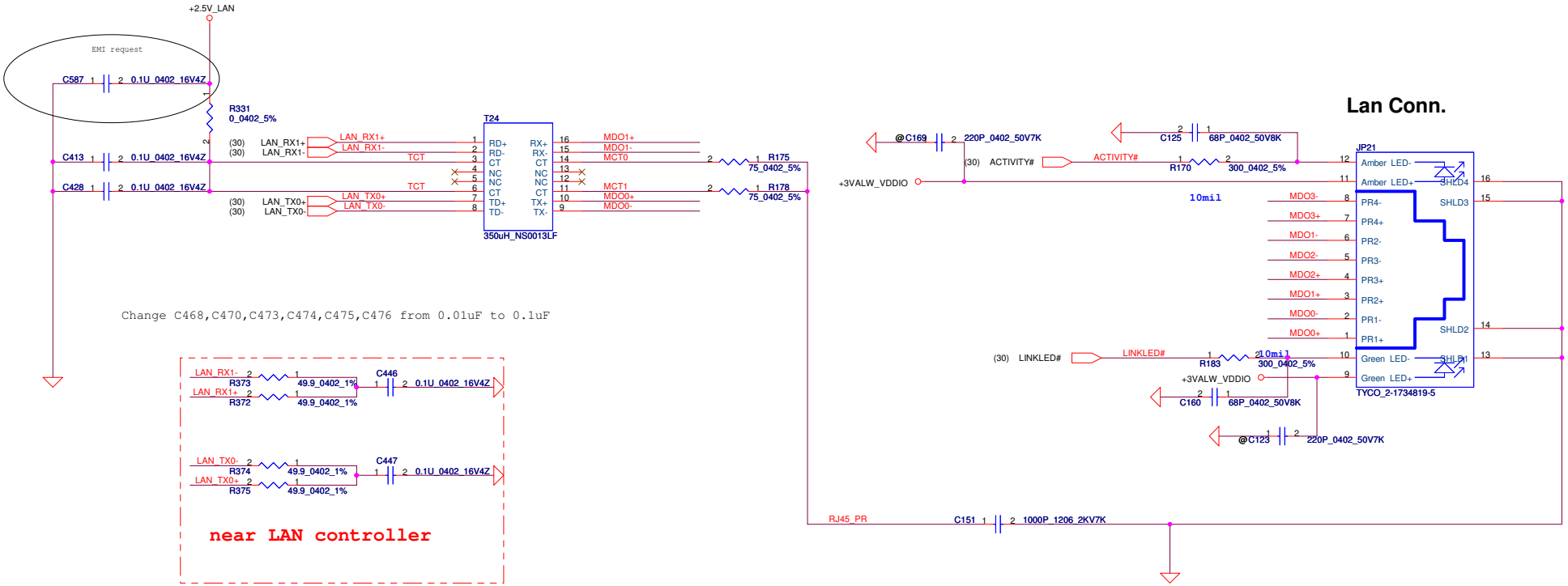

Security Classification	Compal Secret Data		
Issued Date	2006/08/04	Deciphered Date	2006/10/06

THIS SHEET OF ENGINEERING DRAWING IS THE PROPRIETARY PROPERTY OF COMPAL ELECTRONICS, INC. AND CONTAINS CONFIDENTIAL AND TRADE SECRET INFORMATION. THIS SHEET MAY NOT BE TRANSFERED FROM THE CUSTODY OF THE COMPETENT DIVISION OF R&D DEPARTMENT EXCEPT AS AUTHORIZED BY COMPAL ELECTRONICS, INC. NEITHER THIS SHEET NOR THE INFORMATION IT CONTAINS MAY BE USED BY OR DISCLOSED TO ANY THIRD PARTY WITHOUT PRIOR WRITTEN CONSENT OF COMPAL ELECTRONICS, INC.

Compal Electronics, Inc.

Title: **LAN CONTROLLER**

Size: Custom | Document Number: LA-3861P | Rev: 0.1

Date: Monday, August 20, 2007 | Sheet 31 of 47

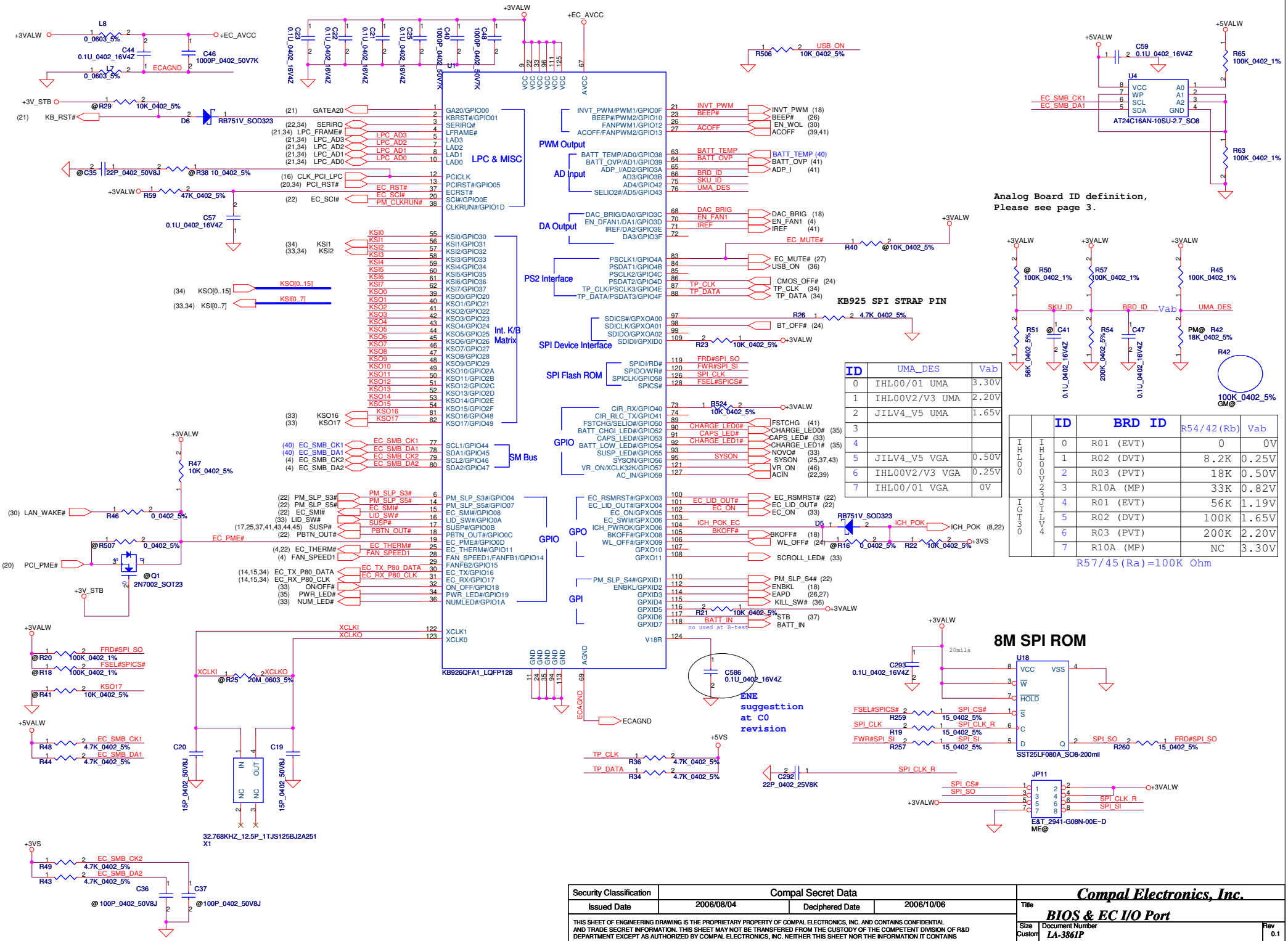

ID	UMA_DES	Vab
0	IHL00/01 UMA	3.30V
1	IHL00V2/V3 UMA	2.20V
2	JILV4_V5 UMA	1.65V
3		
4		
5	JILV4_V5 VGA	0.50V
6	IHL00V2/V3 VGA	0.25V
7	IHL00/01 VGA	0V

		ID	BRD ID	R54/42(Rb)	Vab
IHL00	IHL00V23	0	R01 (EVT)	0	0V
		1	R02 (DVT)	8.2K	0.25V
		2	R03 (PVT)	18K	0.50V
		3	R10A (MP)	33K	0.82V
IGT30	JILV4	4	R01 (EVT)	56K	1.19V
		5	R02 (DVT)	100K	1.65V
		6	R03 (PVT)	200K	2.20V
		7	R10A (MP)	NC	3.30V

R57/45(Ra)=100K Ohm

Security Classification	Compal Secret Data		
Issued Date	2006/08/04	Deciphered Date	2006/10/06

THIS SHEET OF ENGINEERING DRAWING IS THE PROPRIETARY PROPERTY OF COMPAL ELECTRONICS, INC. AND CONTAINS CONFIDENTIAL AND TRADE SECRET INFORMATION. THIS SHEET MAY NOT BE TRANSFERED FROM THE CUSTODY OF THE COMPETENT DIVISION OF R&D DEPARTMENT EXCEPT AS AUTHORIZED BY COMPAL ELECTRONICS, INC. NEITHER THIS SHEET NOR THE INFORMATION IT CONTAINS MAY BE USED BY OR DISCLOSED TO ANY THIRD PARTY WITHOUT PRIOR WRITTEN CONSENT OF COMPAL ELECTRONICS, INC.

Compal Electronics, Inc.

Title: **BIOS & EC I/O Port**

Size: Custom | Document Number: LA-3861P | Rev: 0.1

Date: Wednesday, August 22, 2007 | Sheet 32 of 47

Power Button

ON/OFF switch

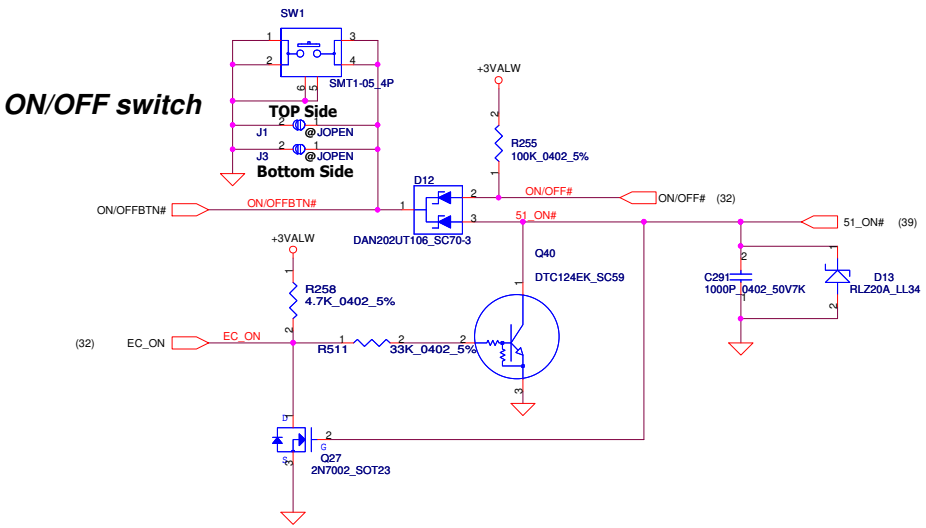

Switch Board Conn.

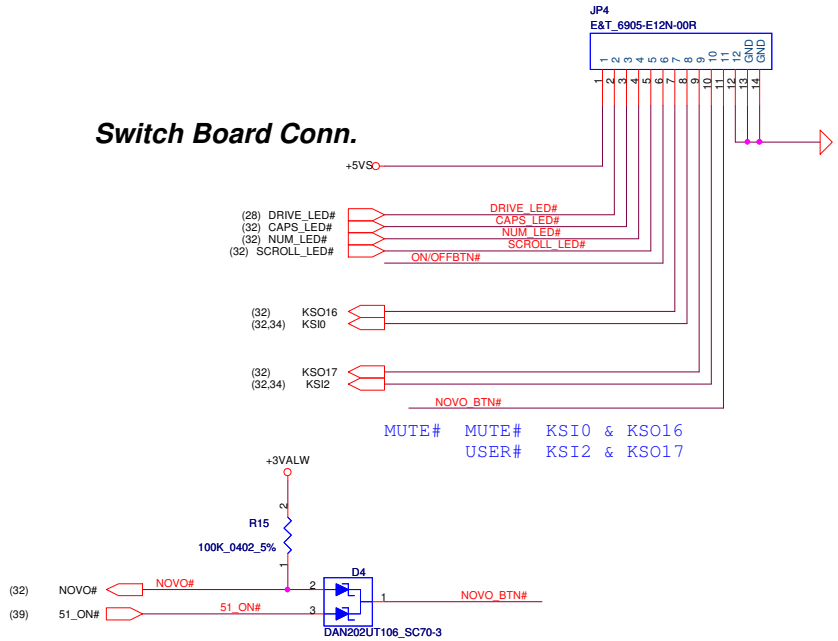

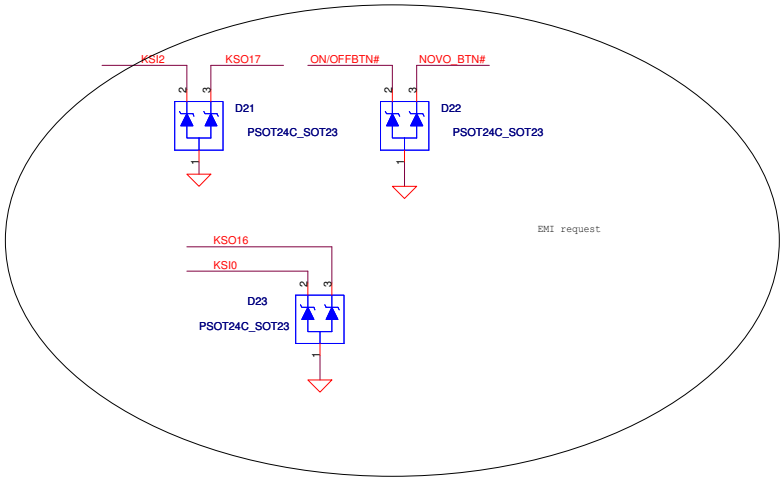

Lid Switch

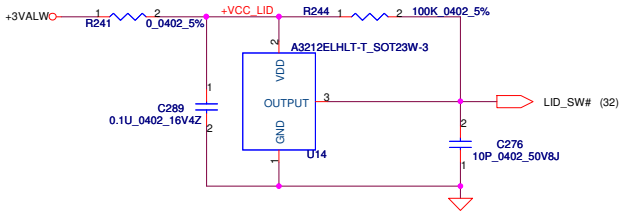

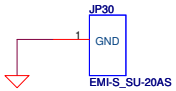

Security Classification	Compal Secret Data		
Issued Date	2006/08/18	Deciphered Date	2007/8/18

THIS SHEET OF ENGINEERING DRAWING IS THE PROPRIETARY PROPERTY OF COMPAL ELECTRONICS, INC. AND CONTAINS CONFIDENTIAL AND TRADE SECRET INFORMATION. THIS SHEET MAY NOT BE TRANSFERED FROM THE CUSTODY OF THE COMPETENT DIVISION OF R&D DEPARTMENT EXCEPT AS AUTHORIZED BY COMPAL ELECTRONICS, INC. NEITHER THIS SHEET NOR THE INFORMATION IT CONTAINS MAY BE USED BY OR DISCLOSED TO ANY THIRD PARTY WITHOUT PRIOR WRITTEN CONSENT OF COMPAL ELECTRONICS, INC.

Compal Electronics, Inc.

Title: BIOS, I/O Port & K/B Connector

Size: B | Document Number: LA-3861P | Rev: 0.1

Date: Monday, August 20, 2007 | Sheet 33 of 47

INT_KBD Conn.

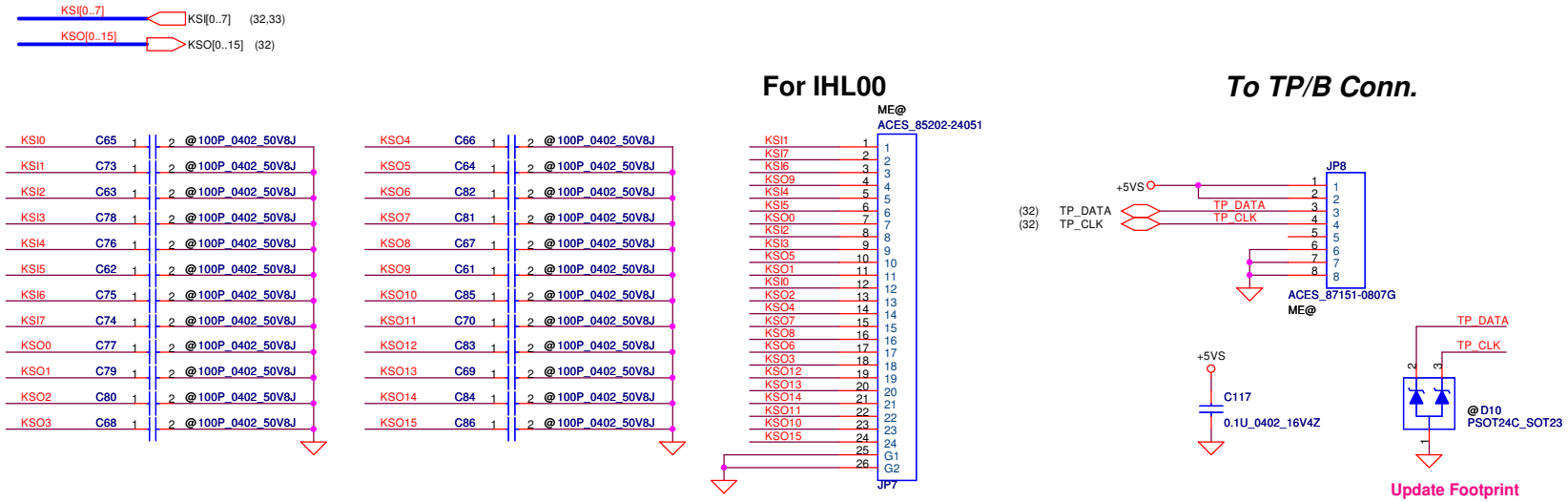

EC DEBUG PORT

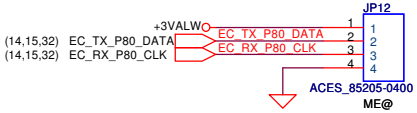

FOR LPC SIO DEBUG PORT

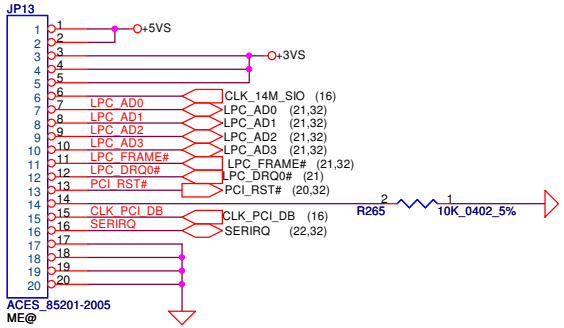

Security Classification	Compal Secret Data		
Issued Date	2006/08/18	Deciphered Date	2007/8/18

THIS SHEET OF ENGINEERING DRAWING IS THE PROPRIETARY PROPERTY OF COMPAL ELECTRONICS, INC. AND CONTAINS CONFIDENTIAL AND TRADE SECRET INFORMATION. THIS SHEET MAY NOT BE TRANSFERED FROM THE CUSTODY OF THE COMPETENT DIVISION OF R&D DEPARTMENT EXCEPT AS AUTHORIZED BY COMPAL ELECTRONICS, INC. NEITHER THIS SHEET NOR THE INFORMATION IT CONTAINS MAY BE USED BY OR DISCLOSED TO ANY THIRD PARTY WITHOUT PRIOR WRITTEN CONSENT OF COMPAL ELECTRONICS, INC.

Compal Electronics, Inc.

Title: EC ENE KB910L(Reserved)

Size: B | Document Number: LA-3861P | Rev: 0.1

Date: Monday, August 20, 2007 | Sheet 34 of 47

LED

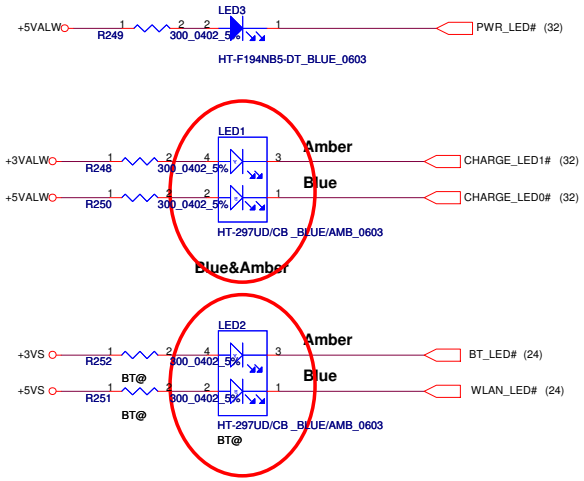

Security Classification	Compal Secret Data		
Issued Date	2006/08/18	Deciphered Date	2007/8/18

THIS SHEET OF ENGINEERING DRAWING IS THE PROPRIETARY PROPERTY OF COMPAL ELECTRONICS, INC. AND CONTAINS CONFIDENTIAL AND TRADE SECRET INFORMATION. THIS SHEET MAY NOT BE TRANSFERED FROM THE CUSTODY OF THE COMPETENT DIVISION OF R&D DEPARTMENT EXCEPT AS AUTHORIZED BY COMPAL ELECTRONICS, INC. NEITHER THIS SHEET NOR THE INFORMATION IT CONTAINS MAY BE USED BY OR DISCLOSED TO ANY THIRD PARTY WITHOUT PRIOR WRITTEN CONSENT OF COMPAL ELECTRONICS, INC.

Compal Electronics, Inc.

Title: MDC/CIR & LED

Size: B | Document Number: LA-3861P | Rev: 0.1

Date: Monday, August 20, 2007 | Sheet 35 of 47

USB Conn.

W=80mils

Kill SWITCH

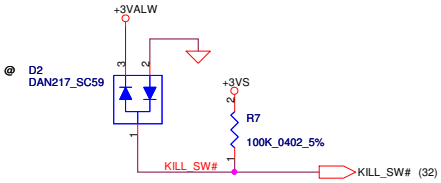

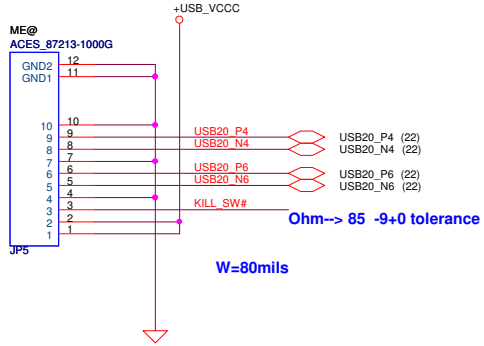

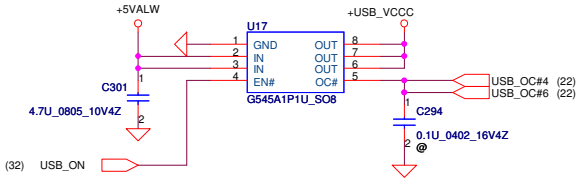

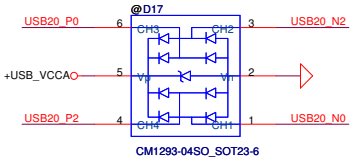

USB CONN. 1

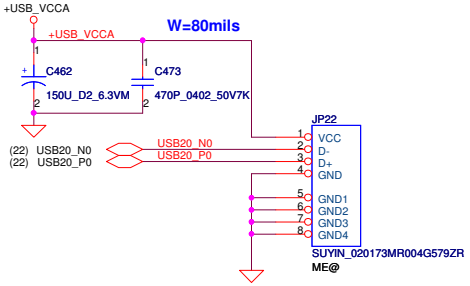

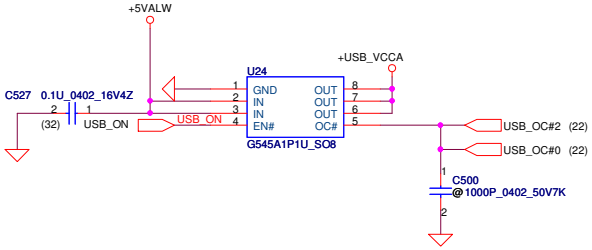

USB CONN. 2

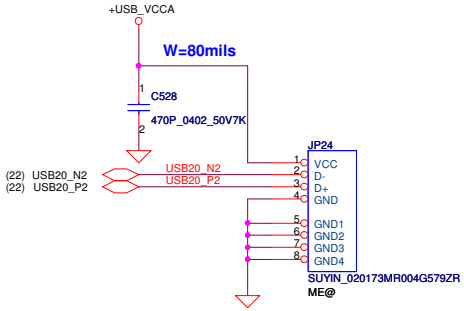

Security Classification	Compal Secret Data		
Issued Date	2006/08/18	Deciphered Date	2007/8/18

THIS SHEET OF ENGINEERING DRAWING IS THE PROPRIETARY PROPERTY OF COMPAL ELECTRONICS, INC. AND CONTAINS CONFIDENTIAL AND TRADE SECRET INFORMATION. THIS SHEET MAY NOT BE TRANSFERED FROM THE CUSTODY OF THE COMPETENT DIVISION OF R&D DEPARTMENT EXCEPT AS AUTHORIZED BY COMPAL ELECTRONICS, INC. NEITHER THIS SHEET NOR THE INFORMATION IT CONTAINS MAY BE USED BY OR DISCLOSED TO ANY THIRD PARTY WITHOUT PRIOR WRITTEN CONSENT OF COMPAL ELECTRONICS, INC.

Compal Electronics, Inc.

Title: Power OK, Reset and RTC Circuit, TP

Size: B | Document Number: LA-3691P | Rev: 0.1

Date: Monday, August 20, 2007 | Sheet 36 of 47

+5VALW TO +5VS

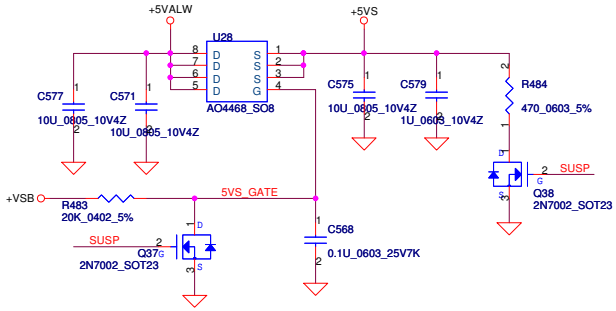

+3VALW TO +3VS

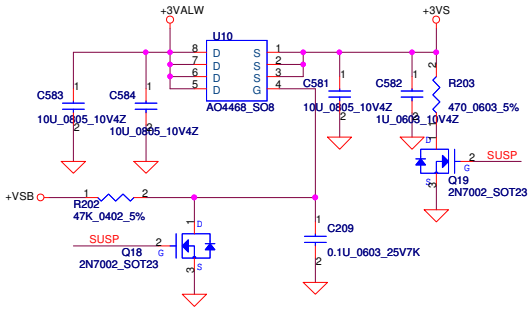

+1.8V to +1.8VS

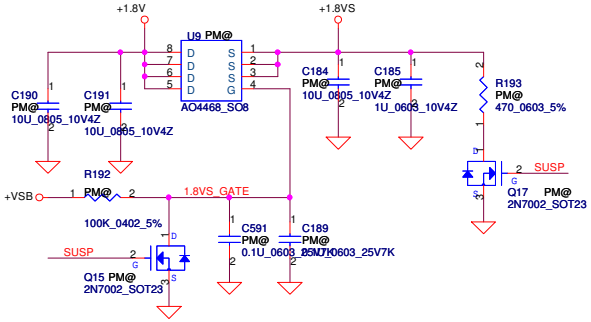

+3VALW to +3V Transfer

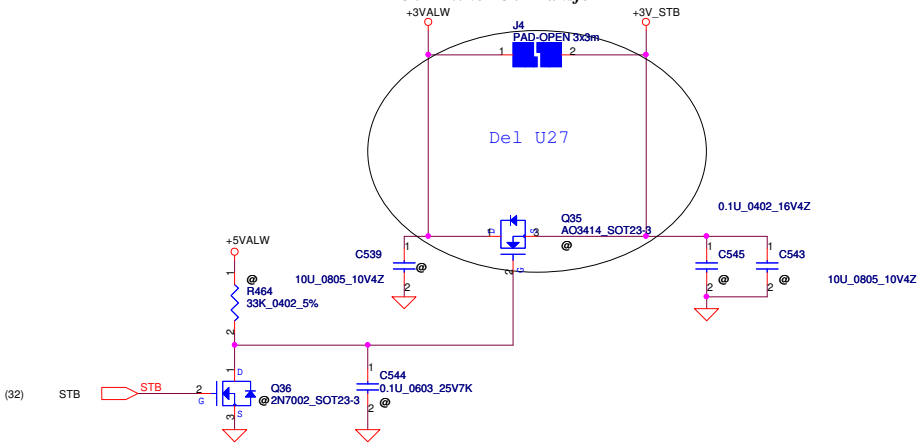

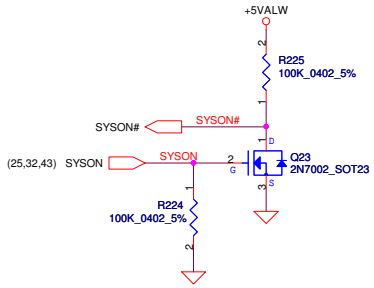

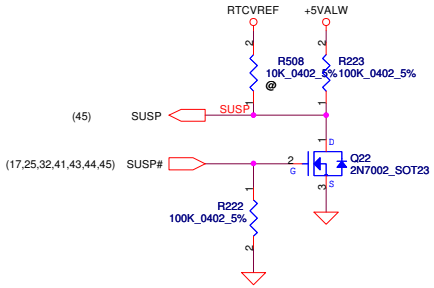

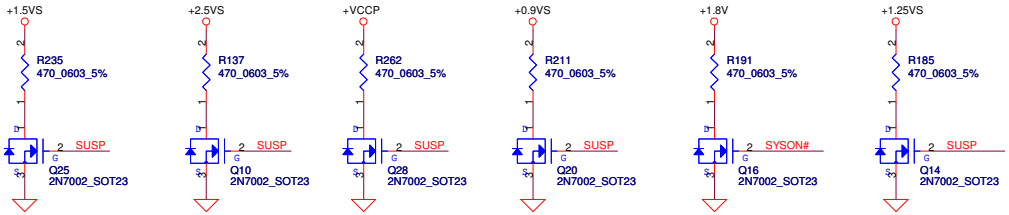

Security Classification	Compal Secret Data		
Issued Date	2006/08/18	Deciphered Date	2007/8/18

THIS SHEET OF ENGINEERING DRAWING IS THE PROPRIETARY PROPERTY OF COMPAL ELECTRONICS, INC. AND CONTAINS CONFIDENTIAL AND TRADE SECRET INFORMATION. THIS SHEET MAY NOT BE TRANSFERED FROM THE CUSTODY OF THE COMPETENT DIVISION OF R&D DEPARTMENT EXCEPT AS AUTHORIZED BY COMPAL ELECTRONICS, INC. NEITHER THIS SHEET NOR THE INFORMATION IT CONTAINS MAY BE USED BY OR DISCLOSED TO ANY THIRD PARTY WITHOUT PRIOR WRITTEN CONSENT OF COMPAL ELECTRONICS, INC.

Compal Electronics, Inc.

Title: DC Interface

Size: B | Document Number: LA-3861P | Rev: 0.1

Date: Tuesday, August 21, 2007 | Sheet 37 of 47

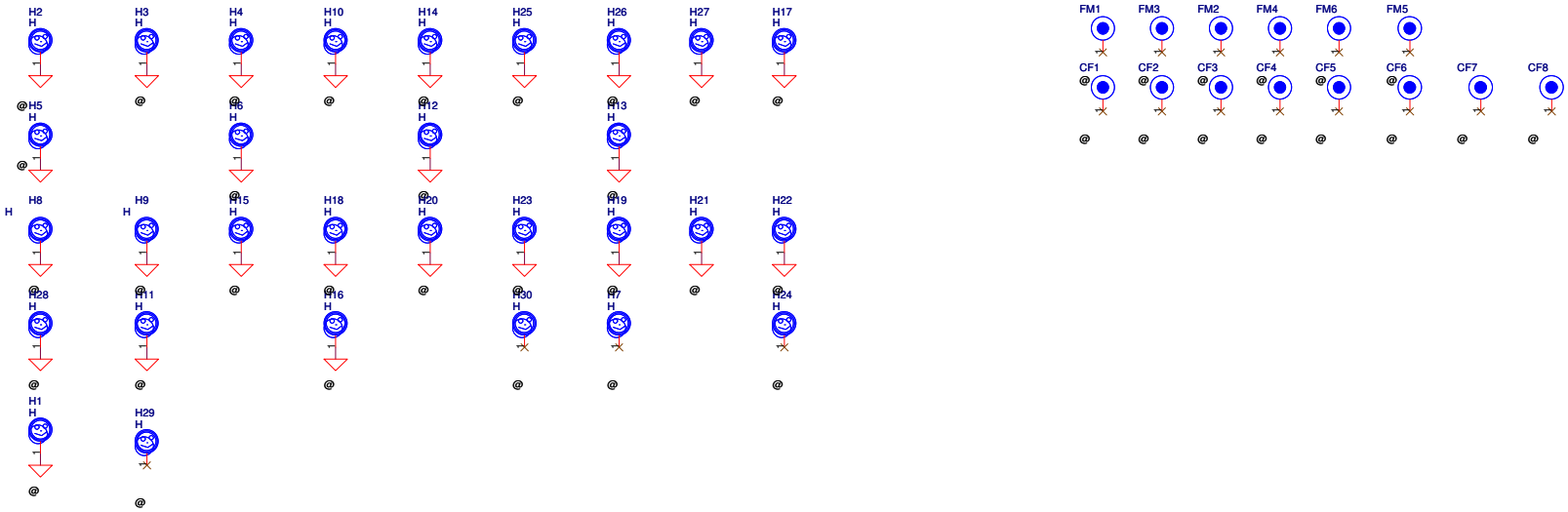

Security Classification	Compal Secret Data		
Issued Date	2006/08/18	Deciphered Date	2007/8/18

THIS SHEET OF ENGINEERING DRAWING IS THE PROPRIETARY PROPERTY OF COMPAL ELECTRONICS, INC. AND CONTAINS CONFIDENTIAL AND TRADE SECRET INFORMATION. THIS SHEET MAY NOT BE TRANSFERRED FROM THE CUSTODY OF THE COMPETENT DIVISION OF R&D DEPARTMENT EXCEPT AS AUTHORIZED BY COMPAL ELECTRONICS, INC. NEITHER THIS SHEET NOR THE INFORMATION IT CONTAINS MAY BE USED BY OR DISCLOSED TO ANY THIRD PARTY WITHOUT PRIOR WRITTEN CONSENT OF COMPAL ELECTRONICS, INC.

Compal Electronics, Inc.

Title: FAN & Screw Hole

Size: B | Document Number: LA-3691P | Rev: 0.1

Date: Monday, August 20, 2007 | Sheet 38 of 47

DC030005Q00

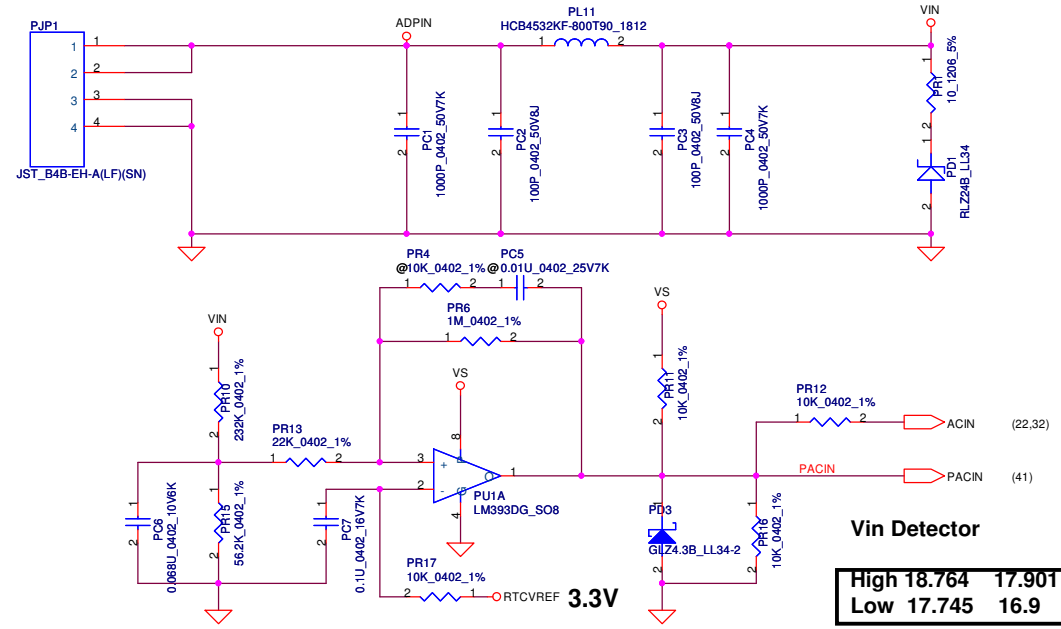

Vin Detector

High	18.764	17.901	17.063
Low	17.745	16.9	16.03

ACIN

Precharge detector	Min.	typ.	Max.
H-->L	14.589V	14.84V	15.243V
L-->H	15.562V	15.97V	16.388V

BATT ONLY

Precharge detector	Min.	typ.	Max.
H-->L	6.138V	6.214V	6.359V
L-->H	7.196V	7.349V	7.505V

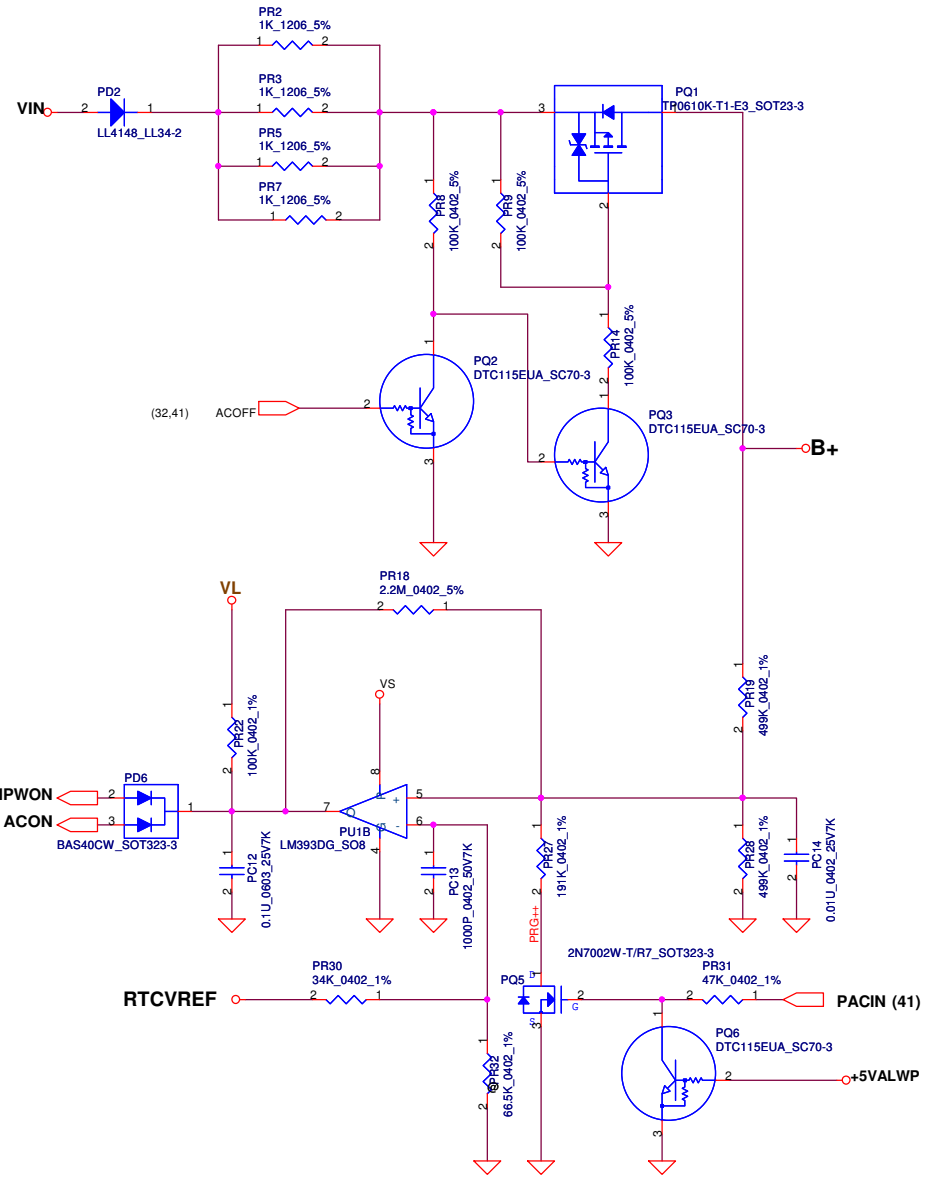

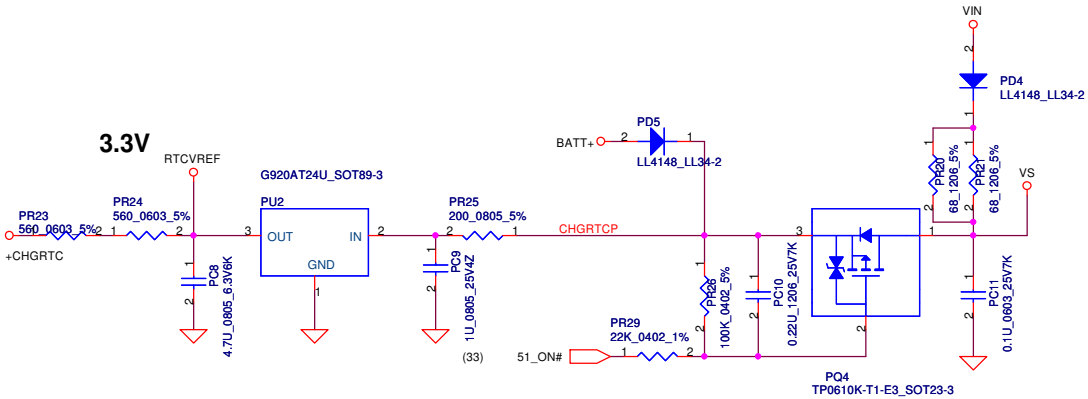

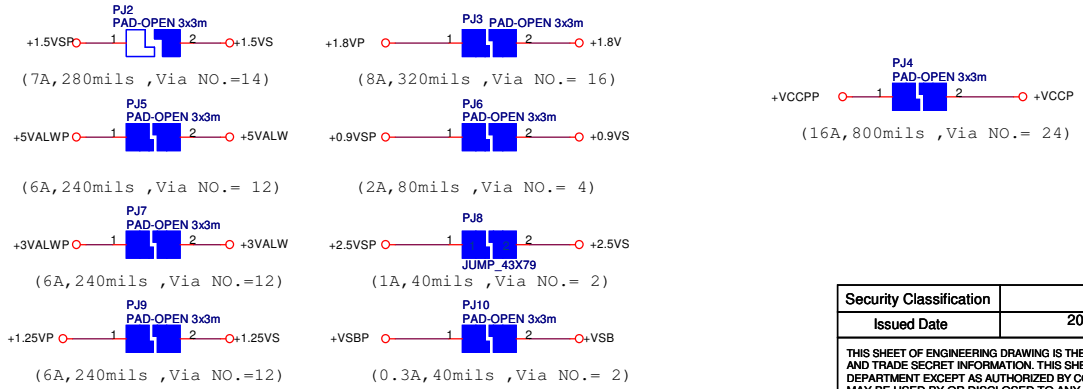

Security Classification	Compal Secret Data		
Issued Date	2005/10/17	Deciphered Date	2006/10/17

THIS SHEET OF ENGINEERING DRAWING IS THE PROPRIETARY PROPERTY OF COMPAL ELECTRONICS, INC. AND CONTAINS CONFIDENTIAL AND TRADE SECRET INFORMATION. THIS SHEET MAY NOT BE TRANSFERED FROM THE CUSTODY OF THE COMPETENT DIVISION OF R&D DEPARTMENT EXCEPT AS AUTHORIZED BY COMPAL ELECTRONICS, INC. NEITHER THIS SHEET NOR THE INFORMATION IT CONTAINS MAY BE USED BY OR DISCLOSED TO ANY THIRD PARTY WITHOUT PRIOR WRITTEN CONSENT OF COMPAL ELECTRONICS, INC.

Compal Electronics, Inc.

Title: **DCIN/DECTOR**

Size	Document Number	Rev
B	IHL00 LA-3691P	0.3

Date: Monday, August 20, 2007 Sheet 39 of 47

DC040003600

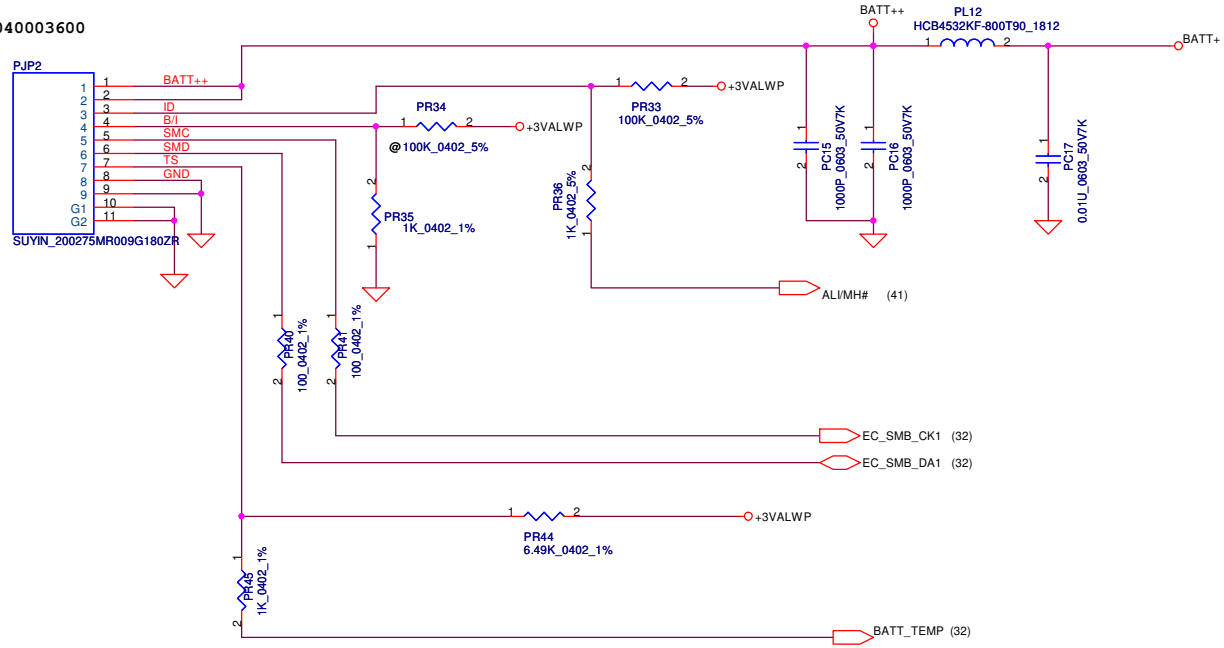

PH1 under CPU botten side :

CPU thermal protection at 87 degree C

Recovery at 70 degree C

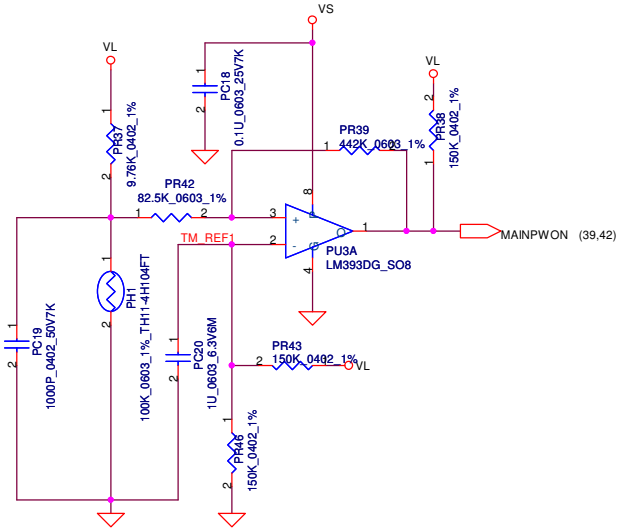

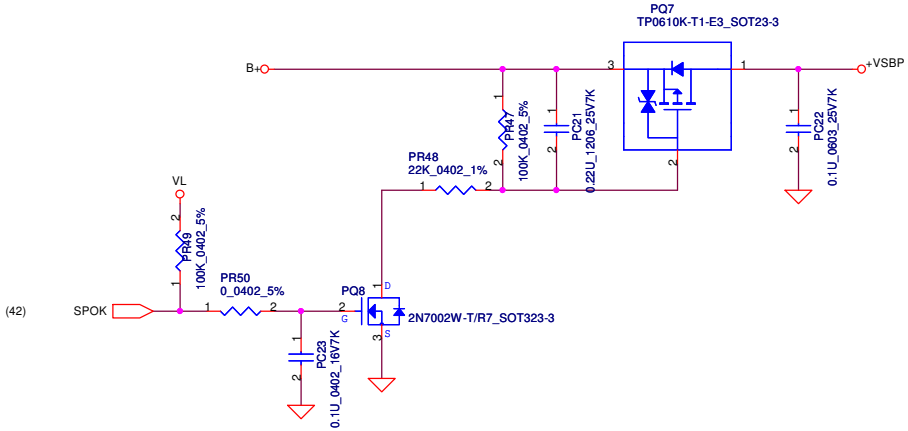

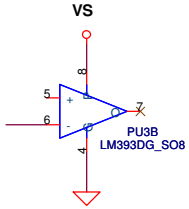

Security Classification	Compal Secret Data		
Issued Date	2005/10/17	Deciphered Date	2006/10/17

THIS SHEET OF ENGINEERING DRAWING IS THE PROPRIETARY PROPERTY OF COMPAL ELECTRONICS, INC. AND CONTAINS CONFIDENTIAL AND TRADE SECRET INFORMATION. THIS SHEET MAY NOT BE TRANSFERED FROM THE CUSTODY OF THE COMPETENT DIVISION OF R&D DEPARTMENT EXCEPT AS AUTHORIZED BY COMPAL ELECTRONICS, INC. NEITHER THIS SHEET NOR THE INFORMATION IT CONTAINS MAY BE USED BY OR DISCLOSED TO ANY THIRD PARTY WITHOUT PRIOR WRITTEN CONSENT OF COMPAL ELECTRONICS, INC.

Compal Electronics, Inc.

Title: **BATTERY CONN. / OTP**

Size: B | Document Number: IHL00 LA-3691P | Rev: 0.3

Date: Monday, August 20, 2007 | Sheet 40 of 47

65W, Iadapter=0~3.42A, Current sense=0.02ohm, PR70=39.2K, CP=3.079A
90W, Iadapter=0~4.74A, Current Sense=0.015ohm, PR70=28.7K, CP=4.263A

ADP_I = 19.9*Iadapter*Rsense

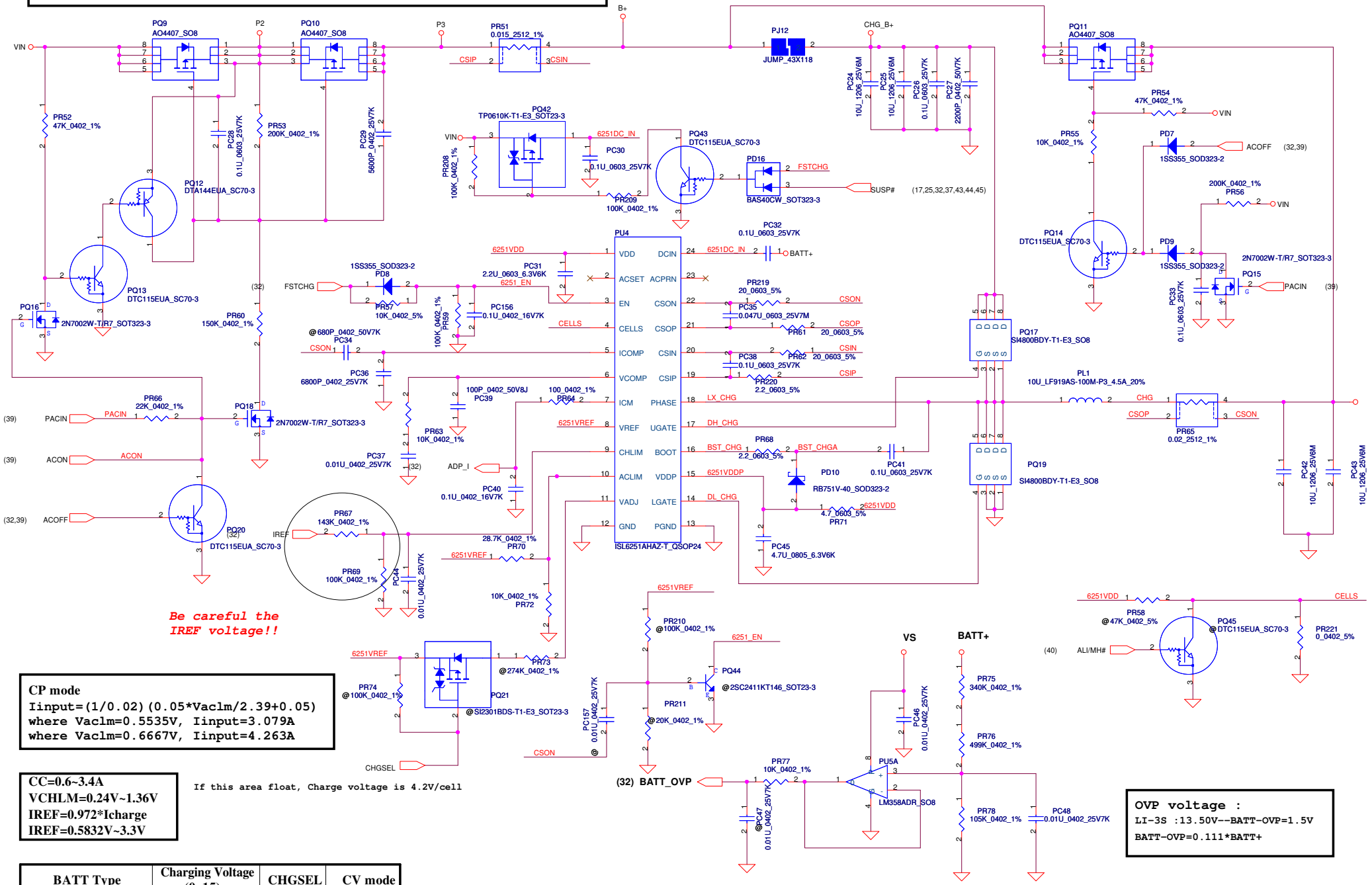

Be careful the IREF voltage!!

CP mode
Iinput=(1/0.02)(0.05*Vaclm/2.39+0.05)
where Vaclm=0.5535V, Iinput=3.079A
where Vaclm=0.6667V, Iinput=4.263A

CC=0.6~3.4A
VCHLM=0.24V~1.36V
IREF=0.972*Icharge
IREF=0.5832V~3.3V

If this area float, Charge voltage is 4.2V/cell

OVP voltage :
LI-3S :13.50V--BATT-OVP=1.5V
BATT-OVP=0.111*BATT+

BATT Type	Charging Voltage (0x15)	CHGSEL	CV mode
2800mAH 3S pack	13050mV	LOW	12.90V
Normal 3S LI-ON Cells	12600mV	HIGH	12.60V

Security Classification	Compal Secret Data		
Issued Date	2006/05/18	Deciphered Date	2007/05/18

THIS SHEET OF ENGINEERING DRAWING IS THE PROPRIETARY PROPERTY OF COMPAL ELECTRONICS, INC. AND CONTAINS CONFIDENTIAL AND TRADE SECRET INFORMATION. THIS SHEET MAY NOT BE TRANSFERED FROM THE CUSTODY OF THE COMPETENT DIVISION OF R&D DEPARTMENT EXCEPT AS AUTHORIZED BY COMPAL ELECTRONICS, INC. NEITHER THIS SHEET NOR THE INFORMATION IT CONTAINS MAY BE USED BY OR DISCLOSED TO ANY THIRD PARTY WITHOUT PRIOR WRITTEN CONSENT OF COMPAL ELECTRONICS, INC.

Compal Electronics, Inc.

Title: CHARGER

Size | Document Number: IHL00 LA-3691P | Rev 0.3

Date: Monday, August 20, 2007 | Sheet 41 of 47

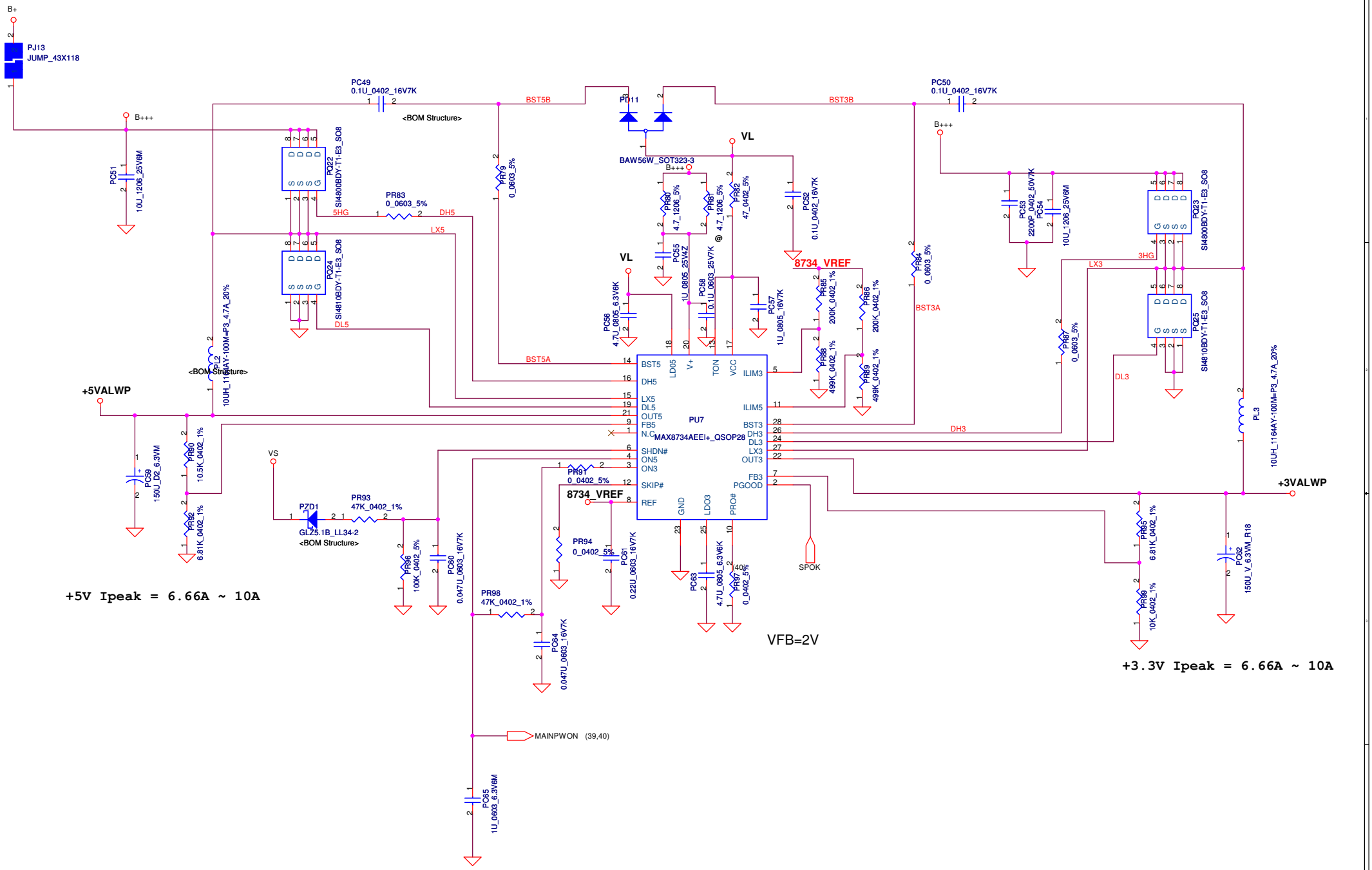

Security Classification	Compal Secret Data		
Issued Date	2005/10/17	Deciphered Date	2006/10/17

THIS SHEET OF ENGINEERING DRAWING IS THE PROPRIETARY PROPERTY OF COMPAL ELECTRONICS, INC. AND CONTAINS CONFIDENTIAL AND TRADE SECRET INFORMATION. THIS SHEET MAY NOT BE TRANSFERED FROM THE CUSTODY OF THE COMPETENT DIVISION OF R&D DEPARTMENT EXCEPT AS AUTHORIZED BY COMPAL ELECTRONICS, INC. NEITHER THIS SHEET NOR THE INFORMATION IT CONTAINS MAY BE USED BY OR DISCLOSED TO ANY THIRD PARTY WITHOUT PRIOR WRITTEN CONSENT OF COMPAL ELECTRONICS, INC.

Compal Electronics, Inc.

Title: **+5VALWP/+3VALWP**

Size	Document Number	Rev
Custom	IHL00 LA-3691P	0.3

Date: Monday, August 20, 2007 | Sheet 42 of 47

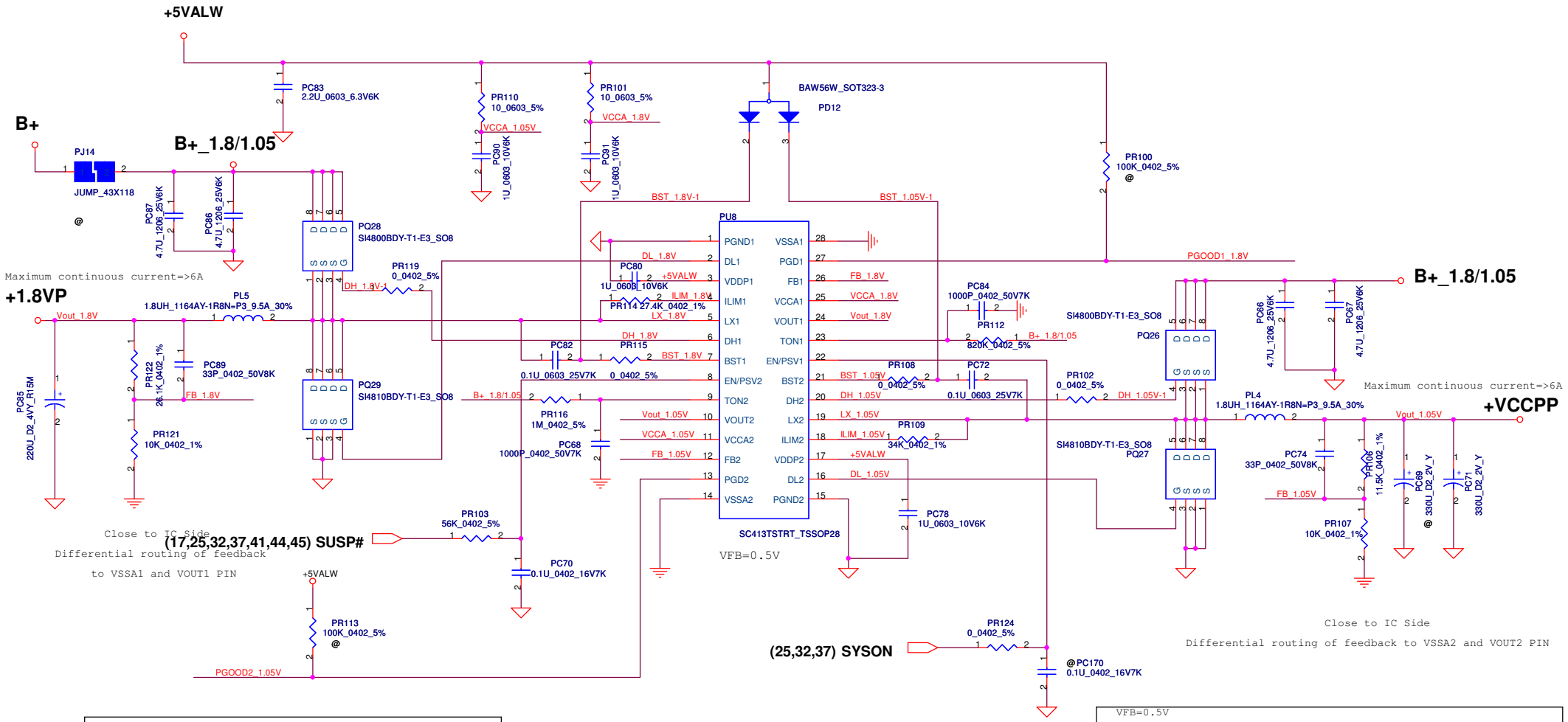

VFB=0.5V

Vo=VFB*(1+PR122/PR127)=1.805V

Ipeak=12.17A, Imax=8.519A

Ton=(3.3E-12*(PR121+37K)*(Vout/VBat))+50ns

=3.3*10e-12*(820K+37K)*(1.8/19)+50ns=0.3179us

FDS6670AS:Rds(on)=>Typ:9 mOhm

Max:11.5 mOhm

Iocp=Ivalley+ Iripple /2

Iripple=(vin-vout)*(Ton/L)=5.467A, 1/2 Iripple=2.734A.

Ivalleymin=10E-6*(PR120/Rds(ON)max*1.5)

=9*10e-6*(27.4K/0.0115*1.5)=14.295A>11.73*1.2=14.076A

Ivalleymax=10E-6*(PR120/Rds(ON)typ*1.2)

=11*10e-6*(27.4K/0.009*1.2)=27.907A.

OCP==>17.029A~30.641A

VFB=0.5V

Vo=VFB*(1+PR129/PR130)=1.5V

Ipeak=5.16A, Imax=3.612A

Ton=(3.3E-12*(PR125+37K)*(Vout/VBat))+50ns

=0.3201us

AO4916 Rds(on)=>Typ:21 mOhm

Max:27 mOhm

Ivalleymin=9*10u*(29.4K/0.027*1.4)=7A

Ivalleymax=11*E-6*(29.4K/0.021*1.1)=12.833A

Iripple=(vin-vout)*(Ton/L)=2.546A, 1/2Iriiple=1.273A

Iocp=Ivalley+ Iripple /2

OCP==>8.273A~14.106A

Security Classification	Compal Secret Data		
Issued Date	2005/10/17	Deciphered Date	2006/10/17

THIS SHEET OF ENGINEERING DRAWING IS THE PROPRIETARY PROPERTY OF COMPAL ELECTRONICS, INC. AND CONTAINS CONFIDENTIAL AND TRADE SECRET INFORMATION. THIS SHEET MAY NOT BE TRANSFERED FROM THE CUSTODY OF THE COMPETENT DIVISION OF R&D DEPARTMENT EXCEPT AS AUTHORIZED BY COMPAL ELECTRONICS, INC. NEITHER THIS SHEET NOR THE INFORMATION IT CONTAINS MAY BE USED BY OR DISCLOSED TO ANY THIRD PARTY WITHOUT PRIOR WRITTEN CONSENT OF COMPAL ELECTRONICS, INC.

Compal Electronics, Inc.

Title: VCCPP/1.8VP

Size: Custom | Document Number: IHL00 LA-3691P | Rev: 0.3

Date: Monday, August 20, 2007 | Sheet 43 of 47

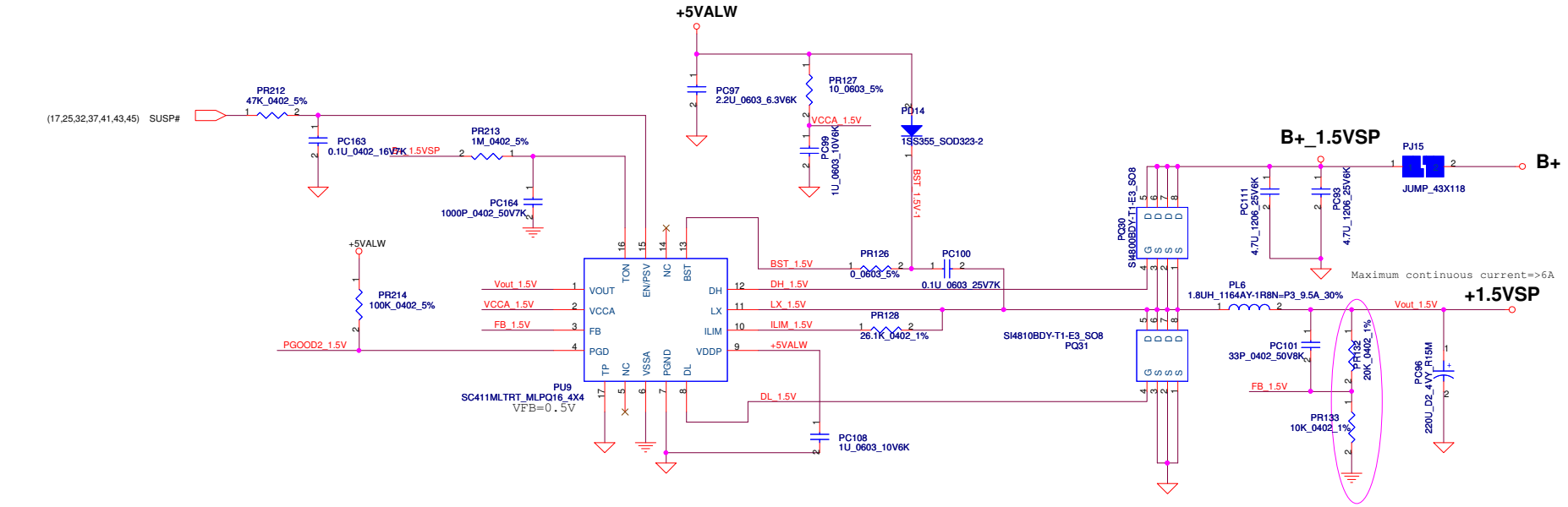

VFB=0.5V, Ipeak=14.02A, Imax=9.814A

The current rating of +1.05VSP include +VCC_GFX current.

Vo=VFB*(1+PR146/PR147)=1.05V

Ton=(3.3E-12*(PR142+37K)*(Vout/VBat))+50ns=0.2391us

SI4810BDY:Rds(on)=>Typ:9mOhm

Max:11.5 mOhm

Ivalleymin=9*10E-6*(PR145/Rds(ON)max*1.5)

=9*10E-6*(26.1K/(0.0115*1.5))=13.617A

Ivalleymax=11*10E-6*(PR145/Rds(ON)min*1.2)

=11*10E-6*(26.1K/(0.009*1.3))=20.076A

Iripple=(vin-vout)*(Ton/L)=4.292A, 1/2Iripple=2.146A

Iocp=Ivalley+ Iripple /2

OCP==>15.763A~22.222A

Ipeak=2.91A, Imax=2A.

Vo=0.8*(1+PR190/PR191)=1.2608V

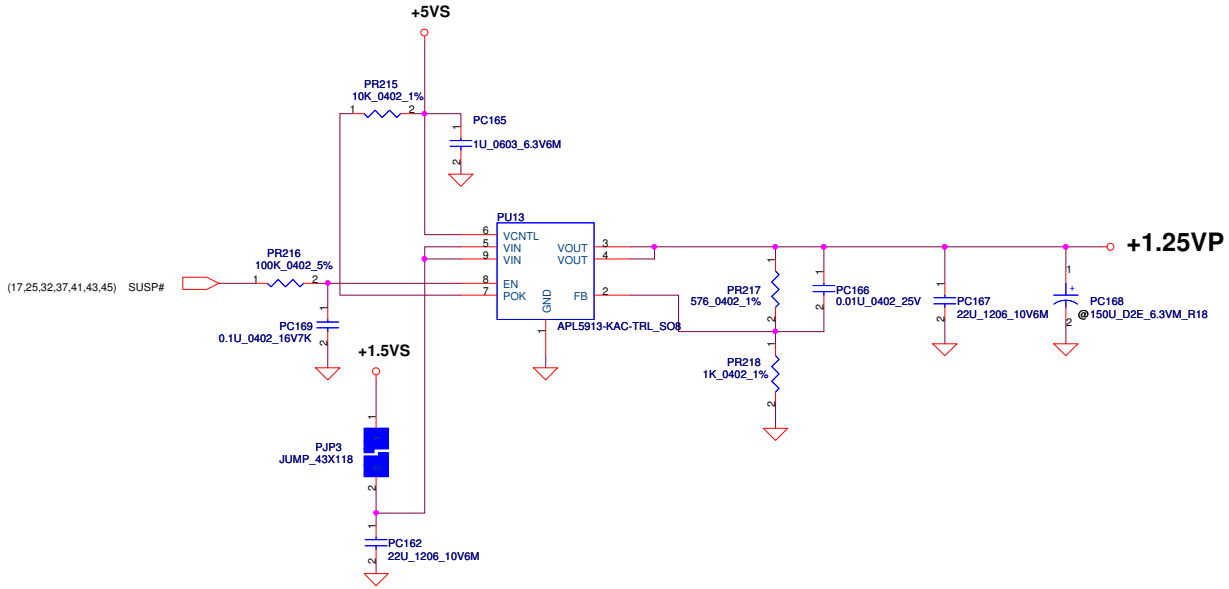

Security Classification	Compal Secret Data		
Issued Date	2005/10/17	Deciphered Date	2006/10/17

THIS SHEET OF ENGINEERING DRAWING IS THE PROPRIETARY PROPERTY OF COMPAL ELECTRONICS, INC. AND CONTAINS CONFIDENTIAL AND TRADE SECRET INFORMATION. THIS SHEET MAY NOT BE TRANSFERED FROM THE CUSTODY OF THE COMPETENT DIVISION OF R&D DEPARTMENT EXCEPT AS AUTHORIZED BY COMPAL ELECTRONICS, INC. NEITHER THIS SHEET NOR THE INFORMATION IT CONTAINS MAY BE USED BY OR DISCLOSED TO ANY THIRD PARTY WITHOUT PRIOR WRITTEN CONSENT OF COMPAL ELECTRONICS, INC.

Compal Electronics, Inc.

Title: **1.5VSP/1.25VP**

Size: Custom | Document Number: IHL00 LA-3691P | Rev: 0.3

Date: Monday, August 20, 2007 | Sheet 44 of 47

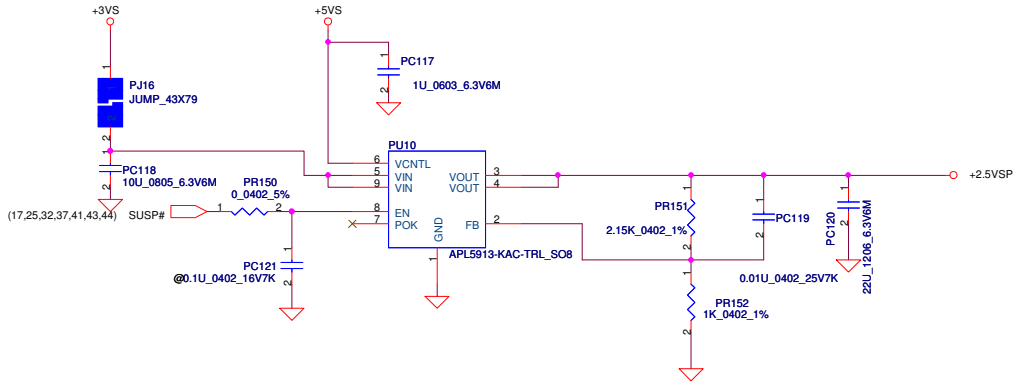

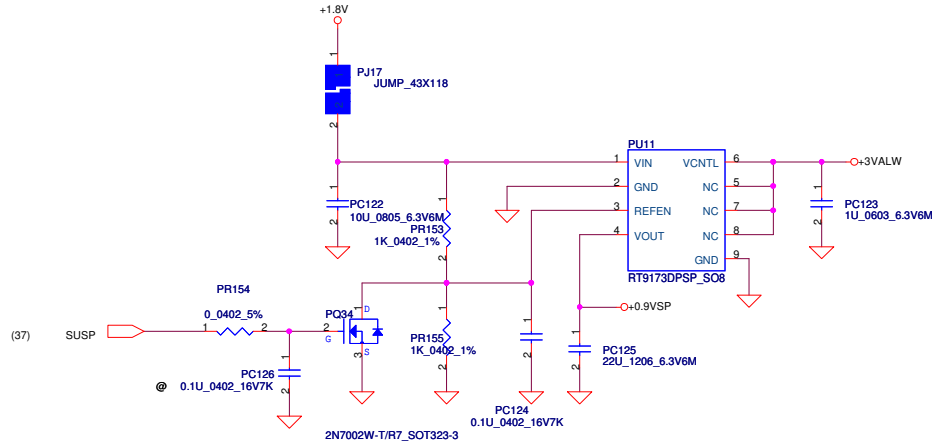

Security Classification	Compal Secret Data			Compal Electronics, Inc.
Issued Date	2005/10/17	Deciphered Date	2006/10/17	Title: +2.5VSP/0.9VSP
				Size: Custom; Document Number: IHL00 LA-3691P; Rev: 0.3
				Date: Monday, August 20, 2007; Sheet 45 of 47

THIS SHEET OF ENGINEERING DRAWING IS THE PROPRIETARY PROPERTY OF COMPAL ELECTRONICS, INC. AND CONTAINS CONFIDENTIAL AND TRADE SECRET INFORMATION. THIS SHEET MAY NOT BE TRANSFERED FROM THE CUSTODY OF THE COMPETENT DIVISION OF R&D DEPARTMENT EXCEPT AS AUTHORIZED BY COMPAL ELECTRONICS, INC. NEITHER THIS SHEET NOR THE INFORMATION IT CONTAINS MAY BE USED BY OR DISCLOSED TO ANY THIRD PARTY WITHOUT PRIOR WRITTEN CONSENT OF COMPAL ELECTRONICS, INC.

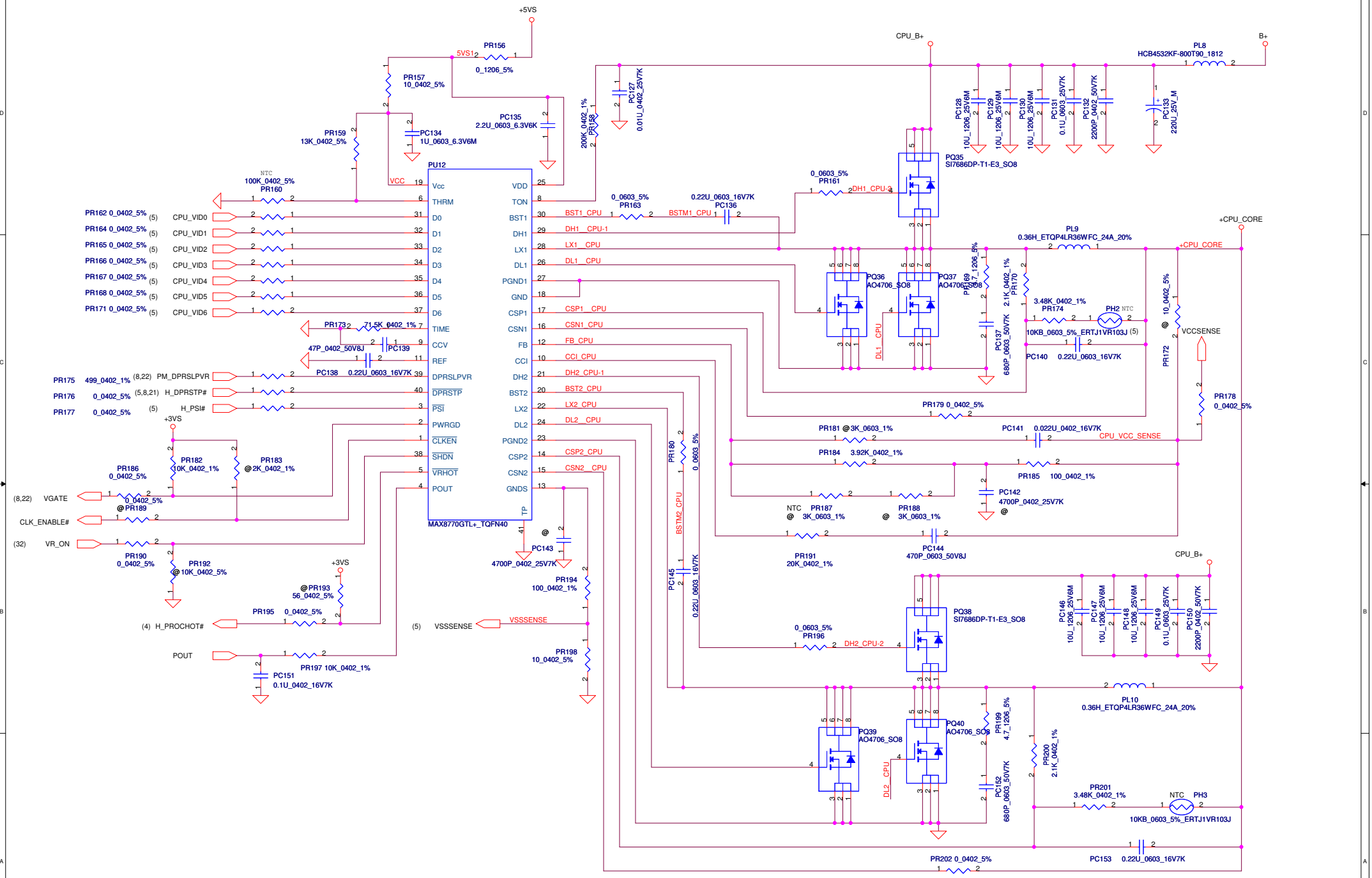

Security Classification	Compal Secret Data		
Issued Date	2005/10/17	Deciphered Date	2006/10/17

THIS SHEET OF ENGINEERING DRAWING IS THE PROPRIETARY PROPERTY OF COMPAL ELECTRONICS, INC. AND CONTAINS CONFIDENTIAL AND TRADE SECRET INFORMATION. THIS SHEET MAY NOT BE TRANSFERED FROM THE CUSTODY OF THE COMPETENT DIVISION OF R&D DEPARTMENT EXCEPT AS AUTHORIZED BY COMPAL ELECTRONICS, INC. NEITHER THIS SHEET NOR THE INFORMATION IT CONTAINS MAY BE USED BY OR DISCLOSED TO ANY THIRD PARTY WITHOUT PRIOR WRITTEN CONSENT OF COMPAL ELECTRONICS, INC.

Compal Electronics, Inc.

Title: **+CPU_CORE**

Size	Document Number	Rev
Custom	IHL00 LA-3691P	0.3

Date: Monday, August 20, 2007 | Sheet 46 of 47

Version change list (P.I.R. List)

Item	Fixed Issue	Reason for change	Rev.	PG#	Modify List	Date	Phase
1							
2							
3							
4							
5							
6							