# IGT30

Compal confidential

## Schematics Document

## Mobile Merom uFCPGA with Intel Crestline_GM/PM+ICH8-M core logic

**Monday, December 25, 2006**

**REV:0.1**

| Security Classification | Compal Secret Data | | |
|---|---|---|---|
| Issued Date | 2006/08/04 | Deciphered Date | 2006/10/06 |

THIS SHEET OF ENGINEERING DRAWING IS THE PROPRIETARY PROPERTY OF COMPAL ELECTRONICS, INC. AND CONTAINS CONFIDENTIAL AND TRADE SECRET INFORMATION. THIS SHEET MAY NOT BE TRANSFERRED FROM THE CUSTODY OF THE COMPETENT DIVISION OF R&D DEPARTMENT EXCEPT AS AUTHORIZED BY COMPAL ELECTRONICS, INC. NEITHER THIS SHEET NOR THE INFORMATION IT CONTAINS MAY BE USED BY OR DISCLOSED TO ANY THIRD PARTY WITHOUT PRIOR WRITTEN CONSENT OF COMPAL ELECTRONICS, INC.

*Compal Electronics, Inc.*

Title: *Cover Sheet*

Size: Custom | Document Number: *IGT30 LA-3571P* | Rev: 0.1

Date: | Sheet 1 of 47

Compal confidential
File Name : LA-3451P

ZZZ1
14W_PCB

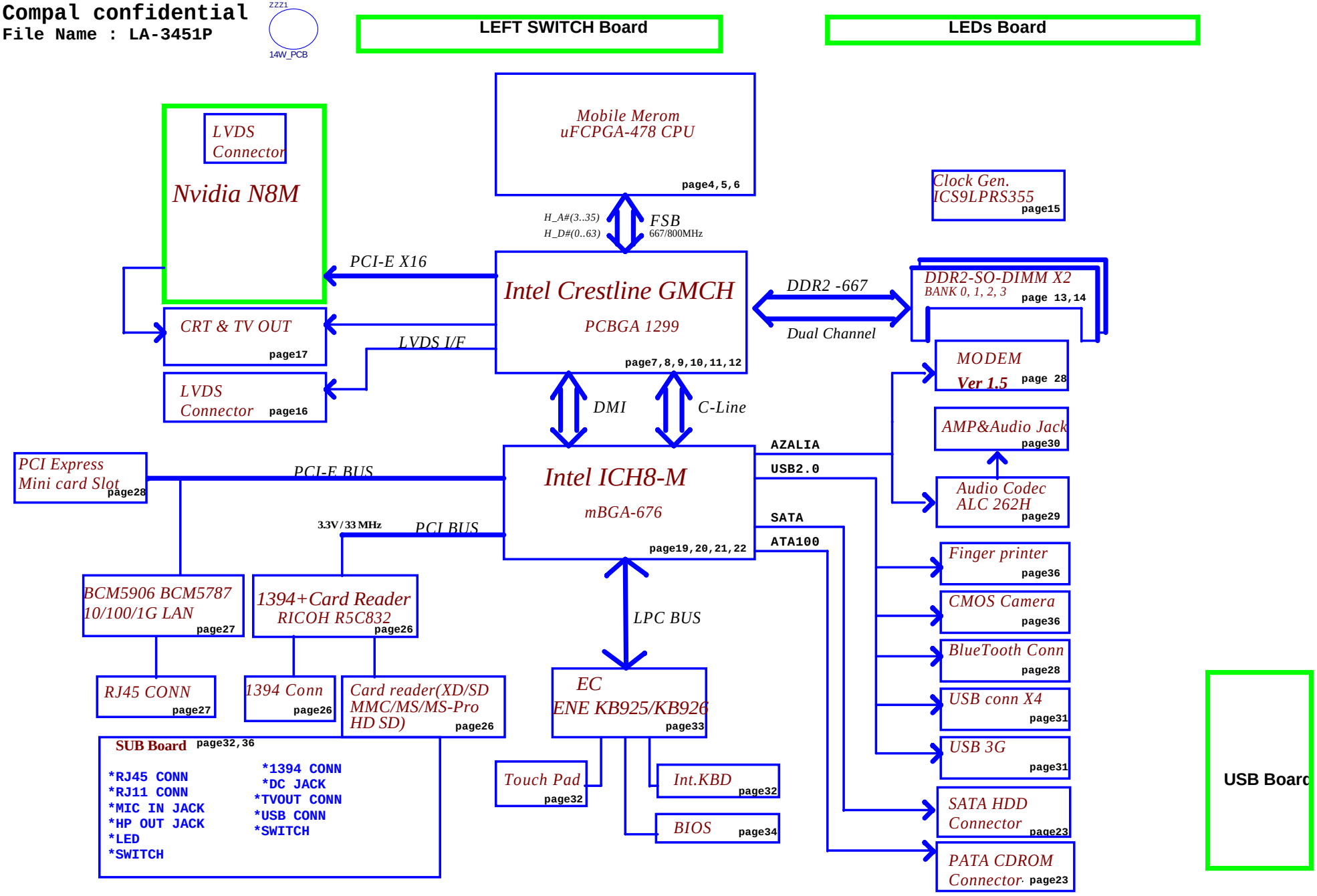


TP Board

| | | | |
|---|---|---|---|
| Security Classification | Compal Secret Data | | |
| Issued Date | 2006/08/04 | Deciphered Date | 2006/10/06 |

THIS SHEET OF ENGINEERING DRAWING IS THE PROPRIETARY PROPERTY OF COMPAL ELECTRONICS, INC. AND CONTAINS CONFIDENTIAL AND TRADE SECRET INFORMATION. THIS SHEET MAY NOT BE TRANSFERRED FROM THE CUSTODY OF THE COMPETENT DIVISION OF R&D DEPARTMENT EXCEPT AS AUTHORIZED BY COMPAL ELECTRONICS, INC. NEITHER THIS SHEET NOR THE INFORMATION IT CONTAINS MAY BE USED BY OR DISCLOSED TO ANY THIRD PARTY WITHOUT PRIOR WRITTEN CONSENT OF COMPAL ELECTRONICS, INC.

Compal Electronics, Inc.

Title: Block Diagram

Size: Custom | Document Number: IGT30 LA-3571P | Rev: 0.1

Date: Monday, December 25, 2006 | Sheet 2 of 47

## Voltage Rails

O MEANS ON X MEANS OFF

| State \ power plane | +B LDO3 LDO5 | +5VALW +3VALW | +1.8V +5V +0.9V | +5VS +3VS +2.5VS +1.8VS +1.5VS +1.25VS +VGA_CORE +CPU_CORE +VCCP | CLOCK |
|---|---|---|---|---|---|
| S0 | O | O | O | O | O |
| S3 | O | O | O | X | O |
| S5 S4/AC | O | O | X | X | O |
| S5 S4/ Battery only | O | X | X | X | X |
| S5 S4/AC & Battery don't exist | X | X | X | X | X |

O MEANS ON
X MEANS OFF

S3 : STR
S4 : STD
S5 : SOFT OFF

## SKU ID Table

| | |
|---|---|
| Vcc | 3.3V +/- 5% |
| Ra | 100K +/- 5% |

| Board ID | Rb | VAD_BID min | VAD_BID typ | VAD_BID max |
|---|---|---|---|---|
| * 0 | 0 | 0 V | 0 V | 0 V |
| 1 | 8.2K +/- 5% | 0.216 V | 0.250 V | 0.289 V |
| 2 | 18K +/- 5% | 0.436 V | 0.503 V | 0.538 V |
| 3 | 33K +/- 5% | 0.712 V | 0.819 V | 0.875 V |
| 4 | 56K +/- 5% | 1.036 V | 1.185 V | 1.264 V |
| 5 | 100K +/- 5% | 1.453 V | 1.650 V | 1.759 V |
| 6 | 200K +/- 5% | 1.935 V | 2.200 V | 2.341 V |
| 7 | NC | 2.500 V | 3.300 V | 3.300 V |

## External PCI Devices

| Device | IDSEL# | REQ#/GNT# | Interrupts |
|---|---|---|---|
| 1394 | AD22 | 0 | PIRQG/H |

## BOM Structure

| MARK | FUNCTION |
|---|---|
| @ | NC FOR ALL |
| GIGA@ | BCM5787 |
| 100@ | BCM5906 |
| UMA@ | Internal 965GM |
| VGA@ | 965PM + Ext VGA |

Address

## USB PORT LIST

| PORT | DEVICE |
|---|---|
| 0 | LEFT SIDE |
| 1 | WIRELESS |
| 2 | RIGHT SIDE |
| 3 | CMOS |
| 4 | RIGHT SIDE |
| 5 | NEW CARD |
| 6 | |
| 7 | BT(HDL20) |
| 8 | |
| 9 | 3G |

## EC SM Bus1 address

| Device | Address |
|---|---|
| Smart Battery | 0001 011X b |
| EEPROM(24C16/02) | 1010 000X b |

## EC SM Bus2 address

| Device | Address |
|---|---|
| ADM1032 | 1001 100X b |

## ICH8 SM Bus address

| Device | Address |
|---|---|
| Clock Generator ( ICS954226) | 1101 001Xb |
| DDRII DIMM0 | 1010 000Xb |
| DDRII DIMM1 | 1010 010Xb |




THIS SHEET OF ENGINEERING DRAWING IS THE PROPRIETARY PROPERTY OF COMPAL ELECTRONICS, INC. AND CONTAINS CONFIDENTIAL AND TRADE SECRET INFORMATION. THIS SHEET MAY NOT BE TRANSFERED FROM THE CUSTODY OF THE COMPETENT DIVISION OF R&D DEPARTMENT EXCEPT AS AUTHORIZED BY COMPAL ELECTRONICS, INC. NEITHER THIS SHEET NOR THE INFORMATION IT CONTAINS MAY BE USED BY OR DISCLOSED TO ANY THIRD PARTY WITHOUT PRIOR WRITTEN CONSENT OF COMPAL ELECTRONICS, INC.

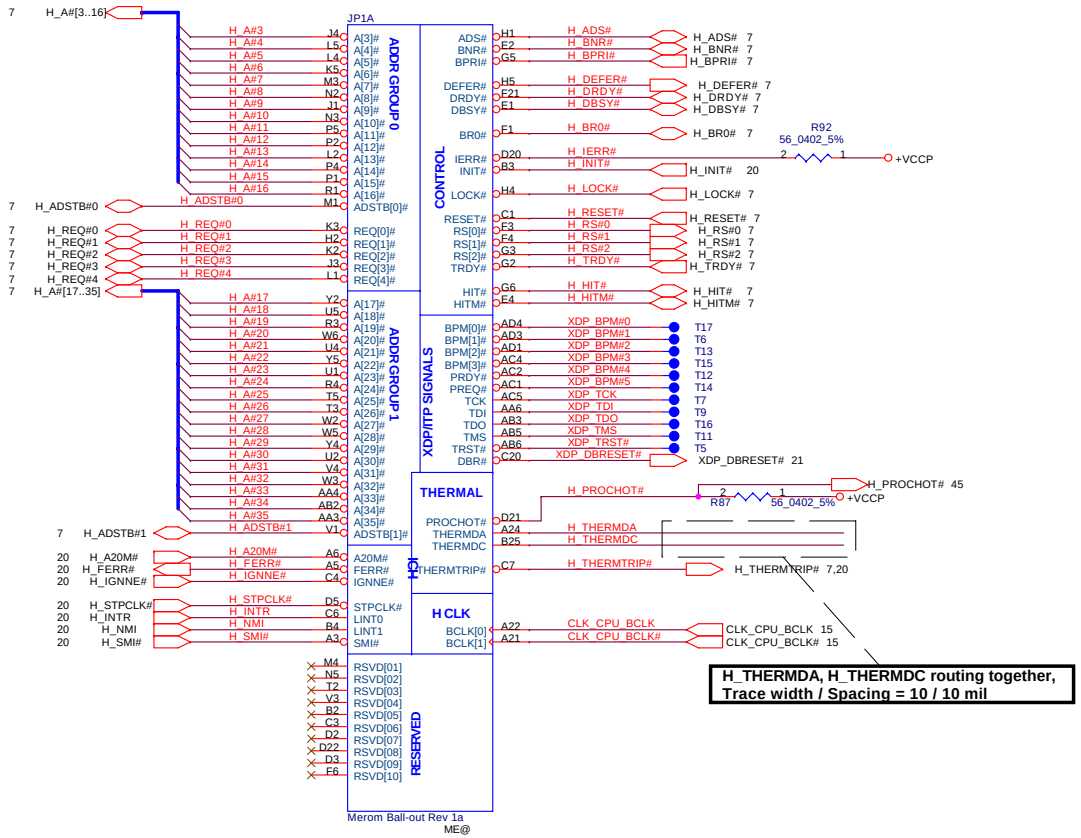


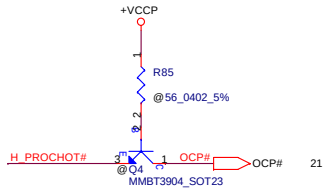


## XDP Reserve

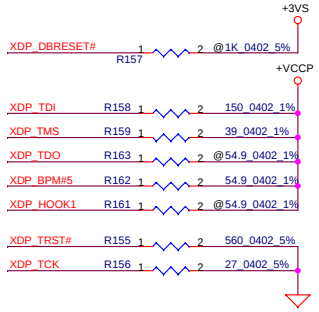


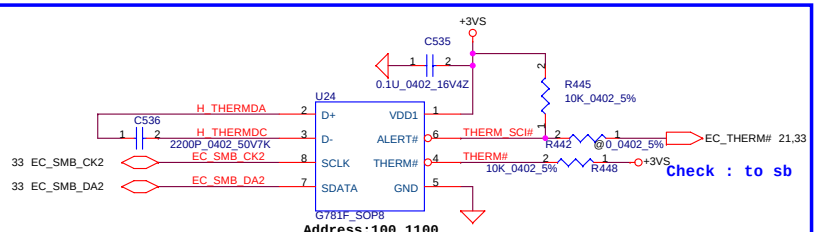


## FAN1 Conn

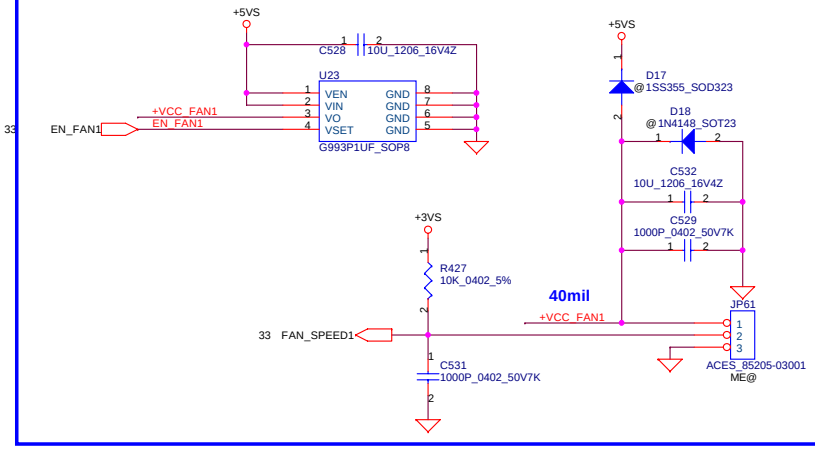


| Security Classification | Compal Secret Data | | |
|---|---|---|---|
| Issued Date | 2006/08/04 | Deciphered Date | 2006/10/06 |

THIS SHEET OF ENGINEERING DRAWING IS THE PROPRIETARY PROPERTY OF COMPAL ELECTRONICS, INC. AND CONTAINS CONFIDENTIAL AND TRADE SECRET INFORMATION. THIS SHEET MAY NOT BE TRANSFERED FROM THE CUSTODY OF THE COMPETENT DIVISION OF R&D DEPARTMENT EXCEPT AS AUTHORIZED BY COMPAL ELECTRONICS, INC. NEITHER THIS SHEET NOR THE INFORMATION IT CONTAINS MAY BE USED BY OR DISCLOSED TO ANY THIRD PARTY WITHOUT PRIOR WRITTEN CONSENT OF COMPAL ELECTRONICS, INC.

**Compal Electronics, Inc.**

Title: **Merom(1/3)-AGTL+/XDP**

Size: Custom | Document Number: *IGT30 LA-3571P* | Rev: 0.1

Date: Monday, December 25, 2006 | Sheet 4 of 47

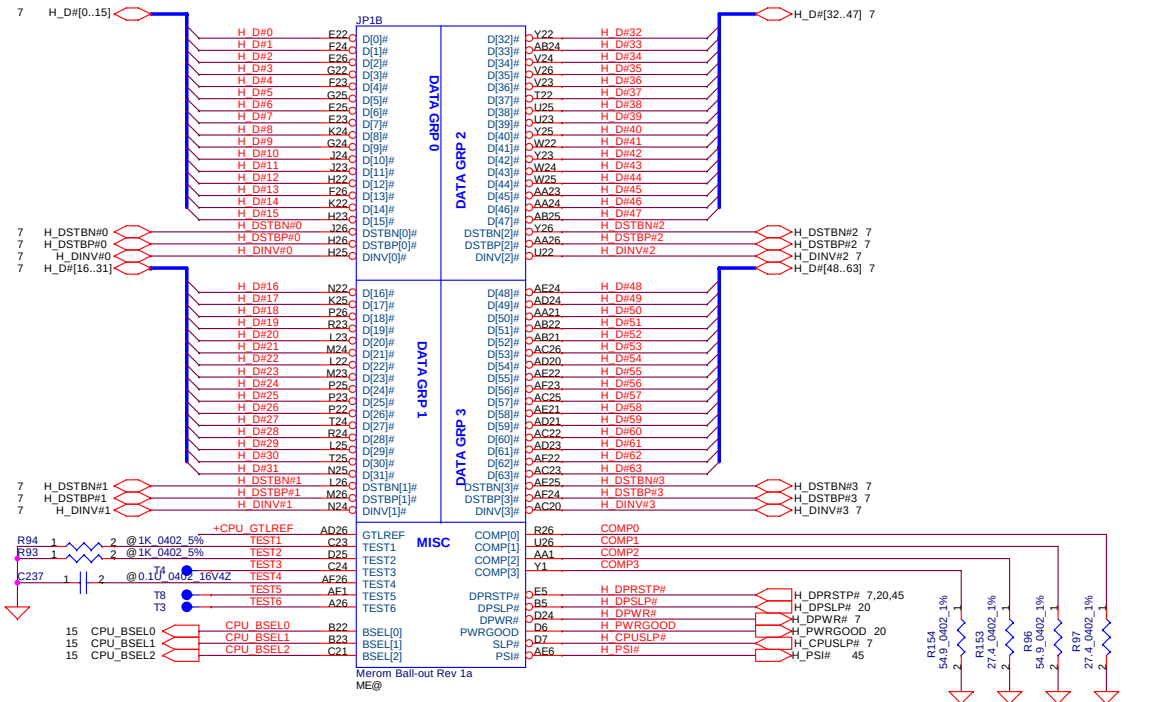


**layout note: Route TEST3 & TEST5 traces on ground referenced layer to the TPs**

| CPU_BSEL | CPU_BSEL2 | CPU_BSEL1 | CPU_BSEL0 |
|---|---|---|---|
| 166 | 0 | 1 | 1 |
| 200 | 0 | 1 | 0 |

**Resistor placed within 0.5" of CPU pin.Trace should be at least 25 mils away from any other toggling signal. COMP[0,2] trace width is 18 mils. COMP[1,3] trace width is 4 mils.**

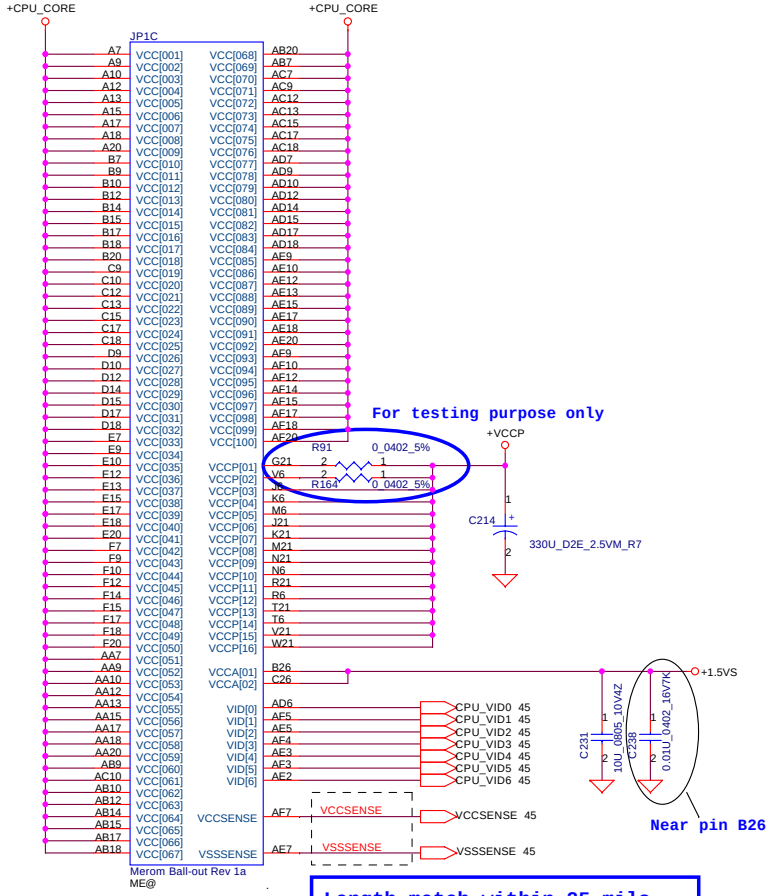


**Length match within 25 mils. The trace width/space/other is 20/7/25.**

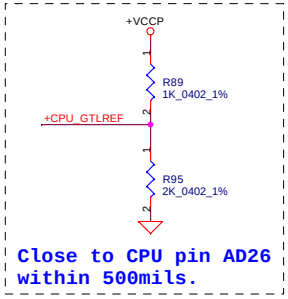


**Close to CPU AD26 within 500mils.**

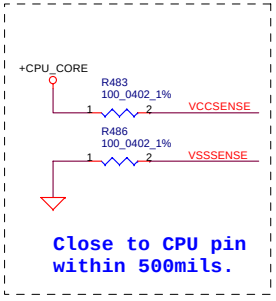


**Close to CPU pin within 500mils.**

| Security Classification | Compal Secret Data | | |
|---|---|---|---|
| Issued Date | 2006/08/04 | Deciphered Date | 2006/10/06 |

THIS SHEET OF ENGINEERING DRAWING IS THE PROPRIETARY PROPERTY OF COMPAL ELECTRONICS, INC. AND CONTAINS CONFIDENTIAL AND TRADE SECRET INFORMATION. THIS SHEET MAY NOT BE TRANSFERED FROM THE CUSTODY OF THE COMPETENT DIVISION OF R&D DEPARTMENT EXCEPT AS AUTHORIZED BY COMPAL ELECTRONICS, INC. NEITHER THIS SHEET NOR THE INFORMATION IT CONTAINS MAY BE USED BY OR DISCLOSED TO ANY THIRD PARTY WITHOUT PRIOR WRITTEN CONSENT OF COMPAL ELECTRONICS, INC.

**Compal Electronics, Inc.**

Title: **Merom(2/3)-AGTL+/PWR**

Size: Custom | Document Number: *IGT30 LA-3571P* | Rev: 0.1

Date: Monday, December 25, 2006 | Sheet 5 of 47

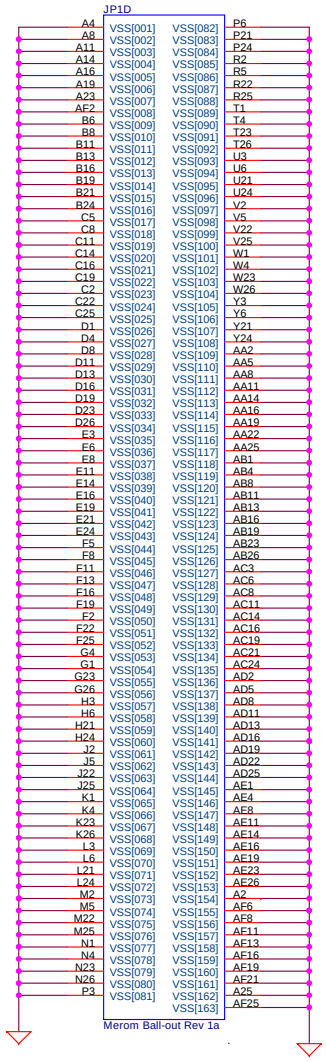


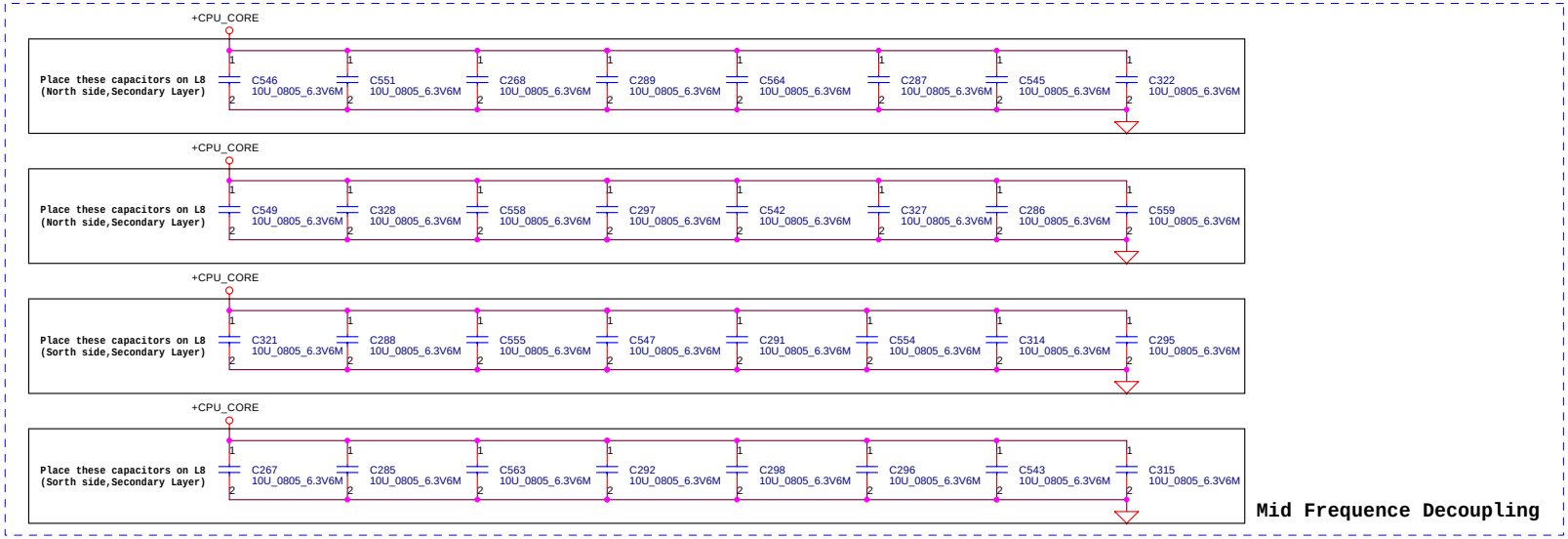


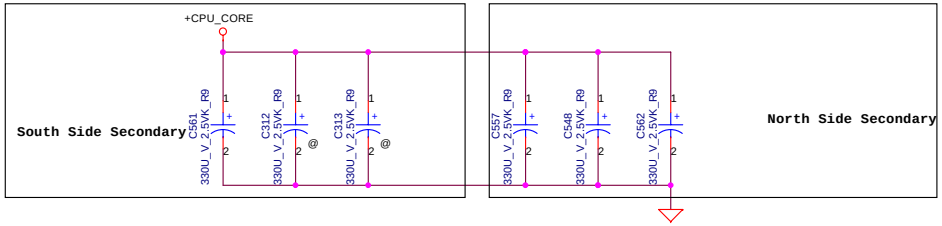


**ESR <= 1.5m ohm**
**Capacitor > 1980uF**

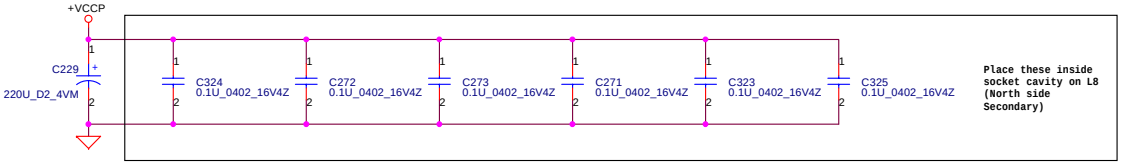


| Security Classification | Compal Secret Data | | |
|---|---|---|---|
| Issued Date | 2006/08/04 | Deciphered Date | 2006/10/06 |

THIS SHEET OF ENGINEERING DRAWING IS THE PROPRIETARY PROPERTY OF COMPAL ELECTRONICS, INC. AND CONTAINS CONFIDENTIAL AND TRADE SECRET INFORMATION. THIS SHEET MAY NOT BE TRANSFERED FROM THE CUSTODY OF THE COMPETENT DIVISION OF R&D DEPARTMENT EXCEPT AS AUTHORIZED BY COMPAL ELECTRONICS, INC. NEITHER THIS SHEET NOR THE INFORMATION IT CONTAINS MAY BE USED BY OR DISCLOSED TO ANY THIRD PARTY WITHOUT PRIOR WRITTEN CONSENT OF COMPAL ELECTRONICS, INC.

**Compal Electronics, Inc.**

Title: **Merom(3/3)-GND&Bypass**

Size: Custom | Document Number: *IGT30 LA-3571P* | Rev: 0.1

Date: Monday, December 25, 2006 | Sheet 6 of 47

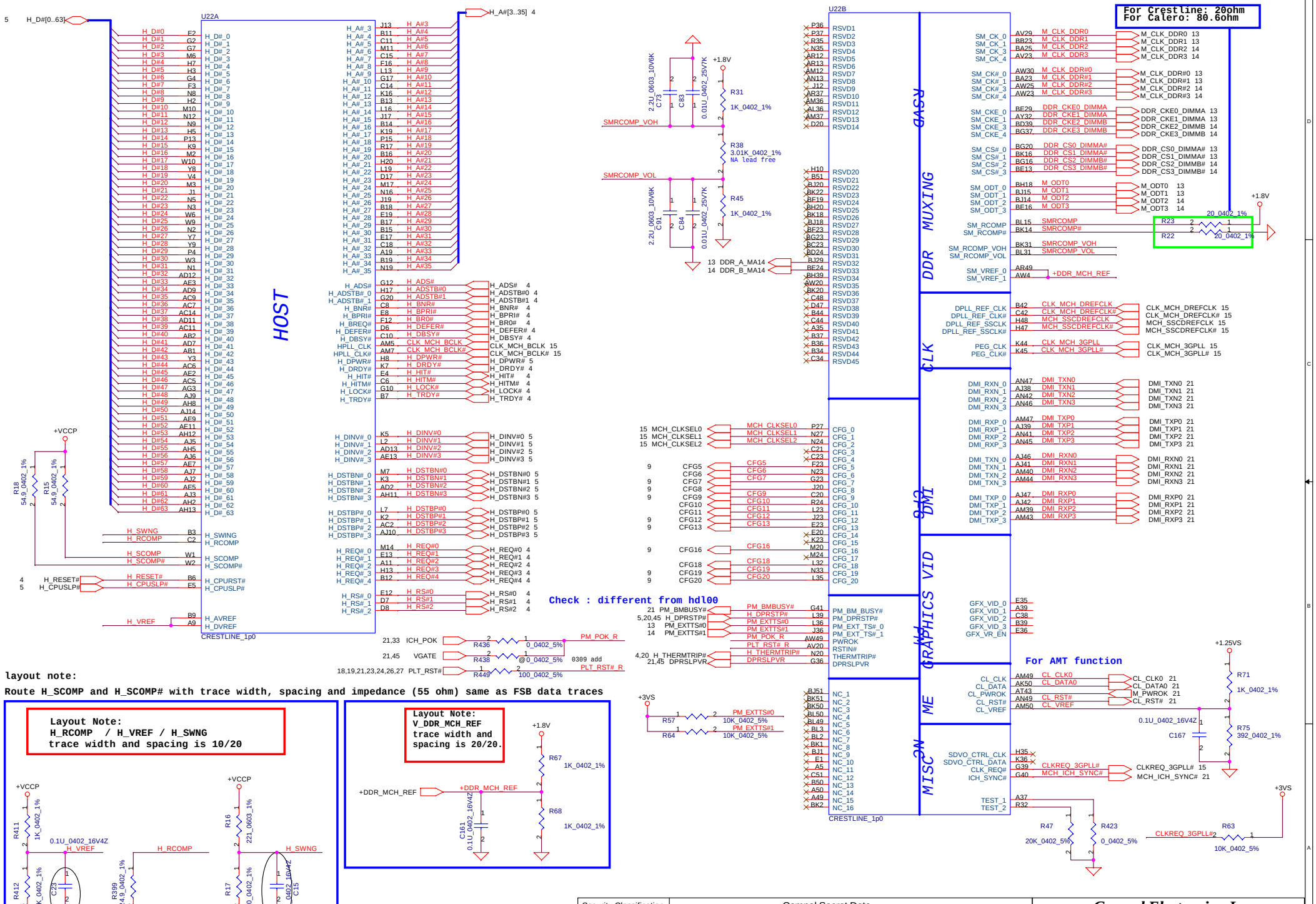


layout note:

Route H_SCOMP and H_SCOMP# with trace width, spacing and impedance (55 ohm) same as FSB data traces

| Security Classification | Compal Secret Data | | |
|---|---|---|---|
| Issued Date | 2006/08/04 | Deciphered Date | 2006/10/06 |

THIS SHEET OF ENGINEERING DRAWING IS THE PROPRIETARY PROPERTY OF COMPAL ELECTRONICS, INC. AND CONTAINS CONFIDENTIAL AND TRADE SECRET INFORMATION. THIS SHEET MAY NOT BE TRANSFERRED FROM THE CUSTODY OF THE COMPETENT DIVISION OF R&D DEPARTMENT EXCEPT AS AUTHORIZED BY COMPAL ELECTRONICS, INC. NEITHER THIS SHEET NOR THE INFORMATION IT CONTAINS MAY BE USED BY OR DISCLOSED TO ANY THIRD PARTY WITHOUT PRIOR WRITTEN CONSENT OF COMPAL ELECTRONICS, INC.

**Compal Electronics, Inc.**

Title: **CRESTLINE(1/6)-AGTL+/DMI/DDR2**

Size: Custom | Document Number: IGT30 LA-3571P | Rev: 0.1

Date: Monday, December 25, 2006 | Sheet 7 of 47

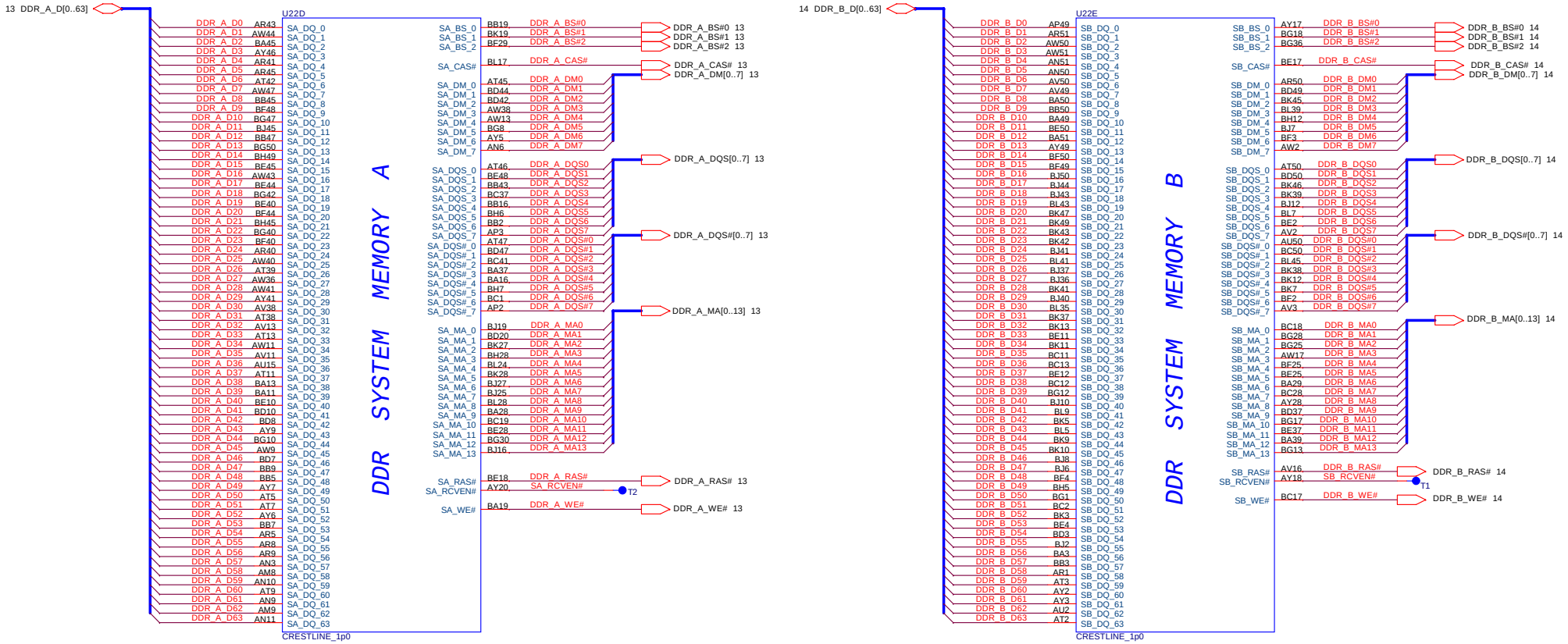


| Security Classification | Compal Secret Data | | |
|---|---|---|---|
| Issued Date | 2006/08/04 | Deciphered Date | 2006/10/06 |

THIS SHEET OF ENGINEERING DRAWING IS THE PROPRIETARY PROPERTY OF COMPAL ELECTRONICS, INC. AND CONTAINS CONFIDENTIAL AND TRADE SECRET INFORMATION. THIS SHEET MAY NOT BE TRANSFERRED FROM THE CUSTODY OF THE COMPETENT DIVISION OF R&D DEPARTMENT EXCEPT AS AUTHORIZED BY COMPAL ELECTRONICS, INC. NEITHER THIS SHEET NOR THE INFORMATION IT CONTAINS MAY BE USED BY OR DISCLOSED TO ANY THIRD PARTY WITHOUT PRIOR WRITTEN CONSENT OF COMPAL ELECTRONICS, INC.

**Compal Electronics, Inc.**

Title: **CRESTLINE((2/6)-DDR2 A/B CH**

Size: Custom | Document Number: *IGT30 LA-3571P* | Rev: 0.1

Date: Monday, December 25, 2006 | Sheet 8 of 47

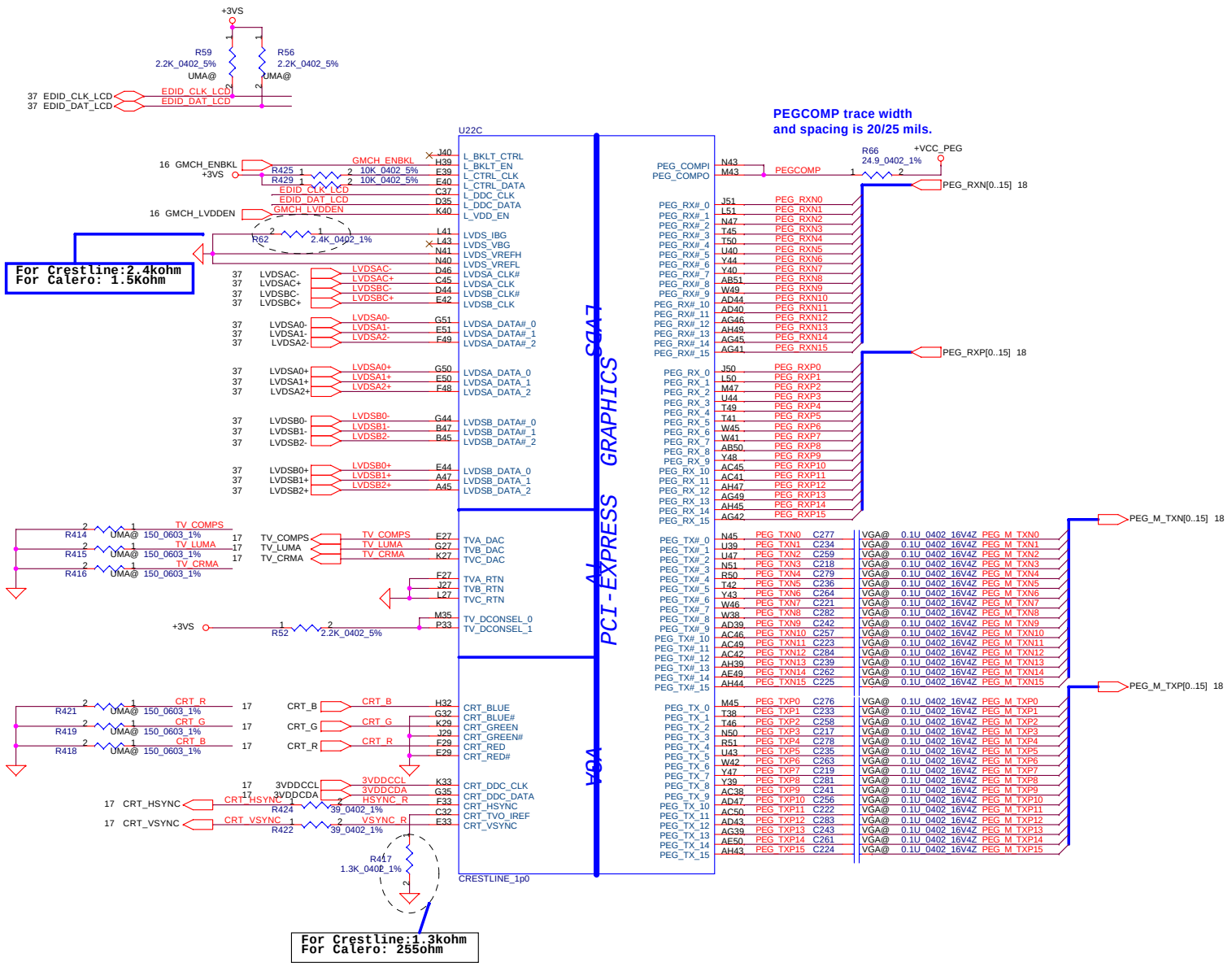


## Strap Pin Table

| | |
|---|---|
| CFG[2:0] FSB Freq select | 010 = FSB 800MHz<br>011 = FSB 667MHz<br>Others = Reserved |
| CFG5 (DMI select) | 0 = DMI x 2<br>1 = DMI x 4 * |
| CFG6 | Reserved |
| CFG7 (CPU Strap) | 0 = Reserved<br>1 = Mobile CPU * |
| CFG8 (Low power PCIE) | 0 = Normal mode<br>1 = Low Power mode * |
| CFG9<br>(PCIE Graphics Lane Reversal) | 0 = Reverse Lane<br>1 = Normal Operation * |
| CFG[11:10] | Reserved |
| CFG[13:12] (XOR/ALLZ) | 00 = Reserved<br>01 = XOR Mode Enabled<br>10 = All Z Mode Enabled<br>11 = Normal Operation(Default) * |
| CFG[15:14] | Reserved |
| CFG16 (FSB Dynamic ODT) | 0 = Disabled<br>1 = Enabled * |
| CFG[18:17] | Reserved |
| SDVO_CTRLDATA | 0 = No SDVO Device Present *<br>1 = SDVO Device Present |
| CFG19 (DMI Lane Reversal) | 0 = Normal Operation (Lane number in Order) *<br>1 = Reverse Lane |
| CFG20 (PCIE/SDVO concurrent) | 0 = Only PCIE or SDVO is operational. *<br>1 = PCIE/SDVO are operating simu. |

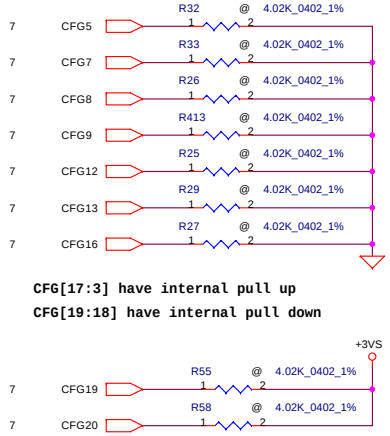


| | | | |
|---|---|---|---|
| Security Classification | Compal Secret Data | | |
| Issued Date | 2006/08/04 | Deciphered Date | 2006/10/06 |

THIS SHEET OF ENGINEERING DRAWING IS THE PROPRIETARY PROPERTY OF COMPAL ELECTRONICS, INC. AND CONTAINS CONFIDENTIAL AND TRADE SECRET INFORMATION. THIS SHEET MAY NOT BE TRANSFERRED FROM THE CUSTODY OF THE COMPETENT DIVISION OF R&D DEPARTMENT EXCEPT AS AUTHORIZED BY COMPAL ELECTRONICS, INC. NEITHER THIS SHEET NOR THE INFORMATION IT CONTAINS MAY BE USED BY OR DISCLOSED TO ANY THIRD PARTY WITHOUT PRIOR WRITTEN CONSENT OF COMPAL ELECTRONICS, INC.

**Compal Electronics, Inc.**

Title: **CRESTLINE((3/6)-VGA/LVDS/TV**

Size: Custom | Document Number: *IGT30 LA-3571P* | Rev: 0.1

Date: Monday, December 25, 2006 | Sheet 9 of 47

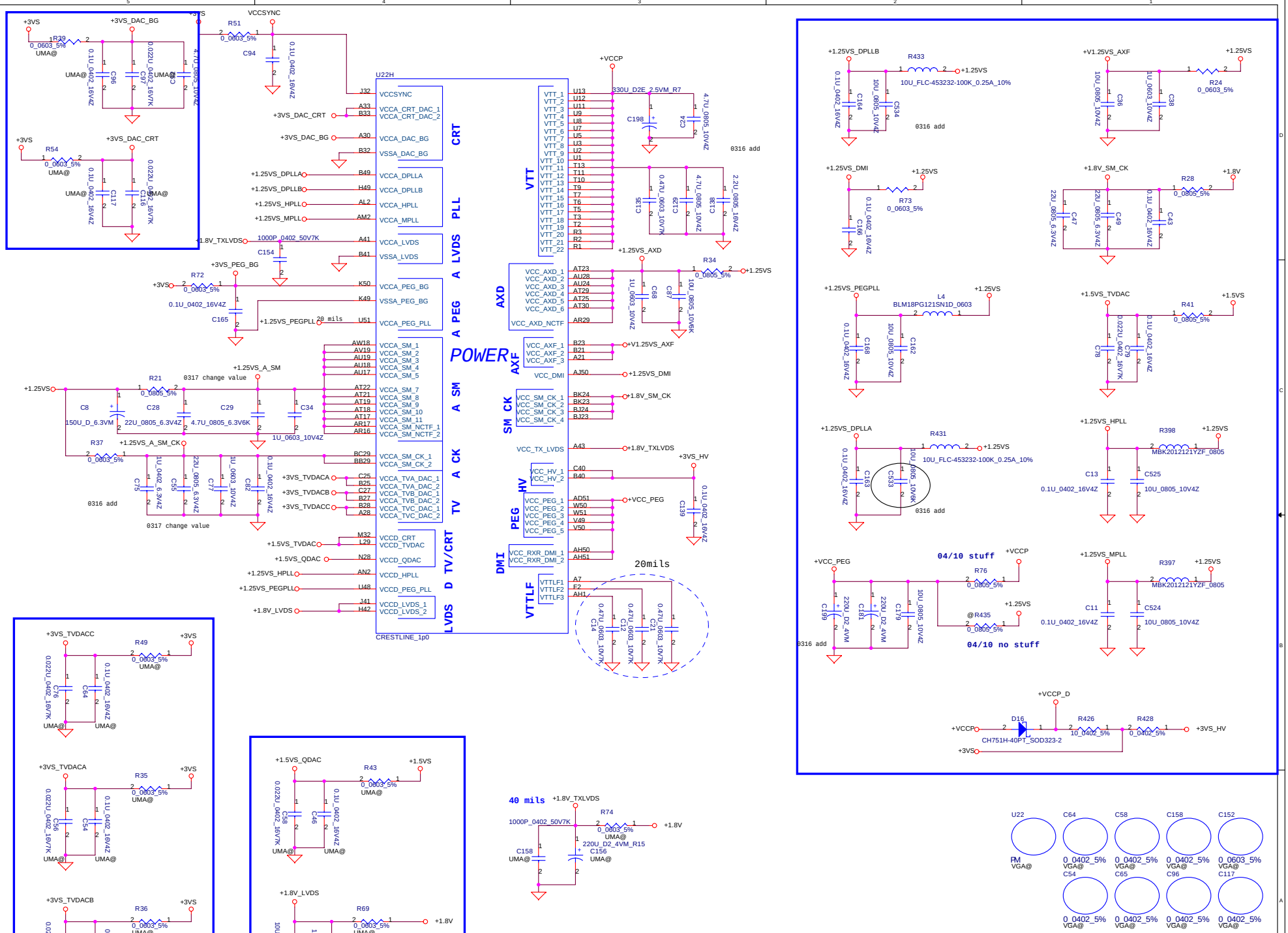


| Security Classification | Compal Secret Data | | |
|---|---|---|---|
| Issued Date | 2006/08/04 | Deciphered Date | 2006/10/06 |

THIS SHEET OF ENGINEERING DRAWING IS THE PROPRIETARY PROPERTY OF COMPAL ELECTRONICS, INC. AND CONTAINS CONFIDENTIAL AND TRADE SECRET INFORMATION. THIS SHEET MAY NOT BE TRANSFERED FROM THE CUSTODY OF THE COMPETENT DIVISION OF R&D DEPARTMENT EXCEPT AS AUTHORIZED BY COMPAL ELECTRONICS, INC. NEITHER THIS SHEET NOR THE INFORMATION IT CONTAINS MAY BE USED BY OR DISCLOSED TO ANY THIRD PARTY WITHOUT PRIOR WRITTEN CONSENT OF COMPAL ELECTRONICS, INC.

**Compal Electronics, Inc.**

Title: **CRESTLINE(4/6)-PWR**

Size: Custom | Document Number: IGT30 LA-3571P | Rev: 0.1

Date: Monday, December 25, 2006 | Sheet 10 of 47

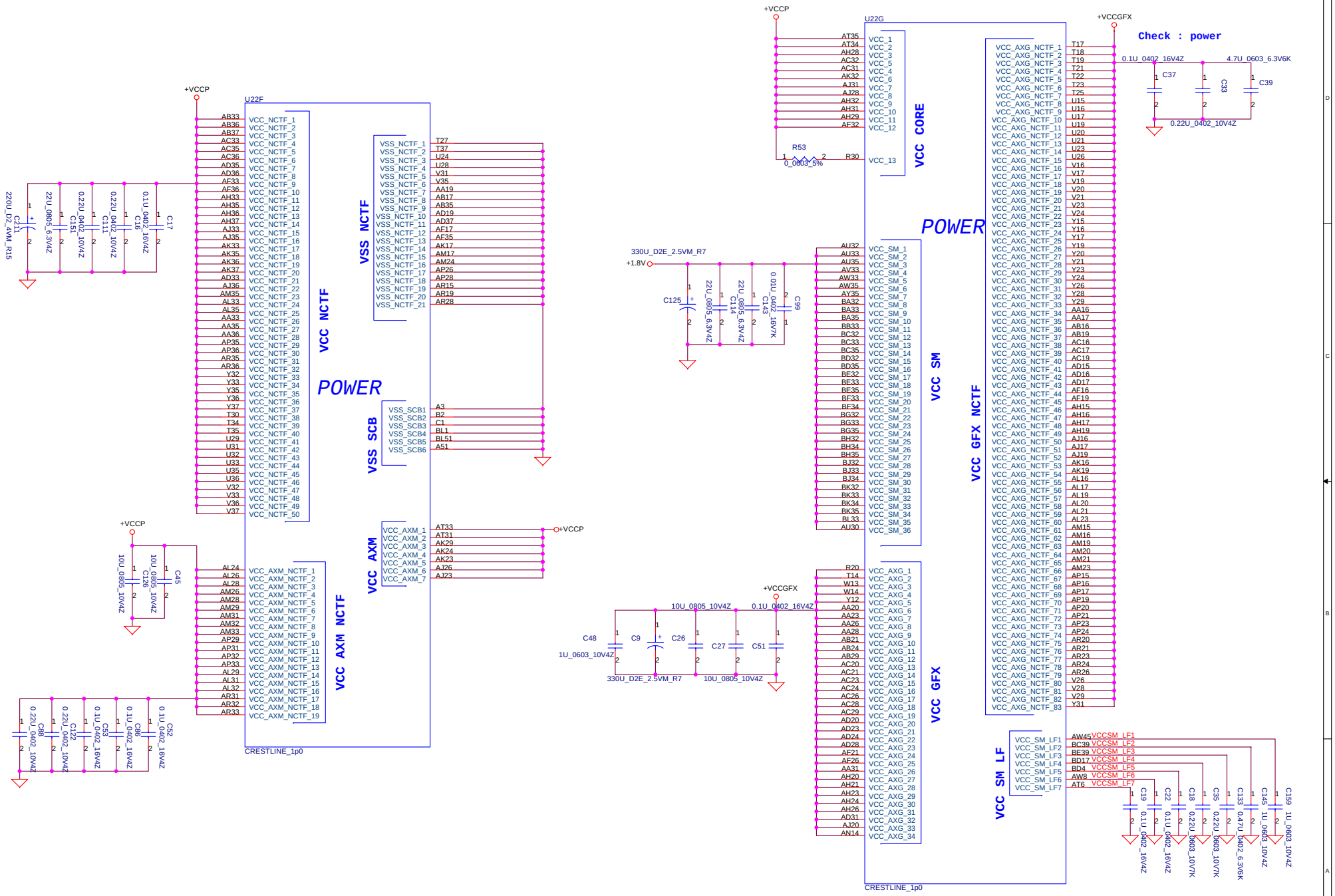


| Security Classification | Compal Secret Data | | |
|---|---|---|---|
| Issued Date | 2006/08/04 | Deciphered Date | 2006/10/06 |

THIS SHEET OF ENGINEERING DRAWING IS THE PROPRIETARY PROPERTY OF COMPAL ELECTRONICS, INC. AND CONTAINS CONFIDENTIAL AND TRADE SECRET INFORMATION. THIS SHEET MAY NOT BE TRANSFERRED FROM THE CUSTODY OF THE COMPETENT DIVISION OF R&D DEPARTMENT EXCEPT AS AUTHORIZED BY COMPAL ELECTRONICS, INC. NEITHER THIS SHEET NOR THE INFORMATION IT CONTAINS MAY BE USED BY OR DISCLOSED TO ANY THIRD PARTY WITHOUT PRIOR WRITTEN CONSENT OF COMPAL ELECTRONICS, INC.

**Compal Electronics, Inc.**

Title: **CRESTLINE((5/6)-PWR/GND**

Size: Custom | Document Number: *IGT30 LA-3571P* | Rev: 0.1

Date: Monday, December 25, 2006 | Sheet 11 of 47

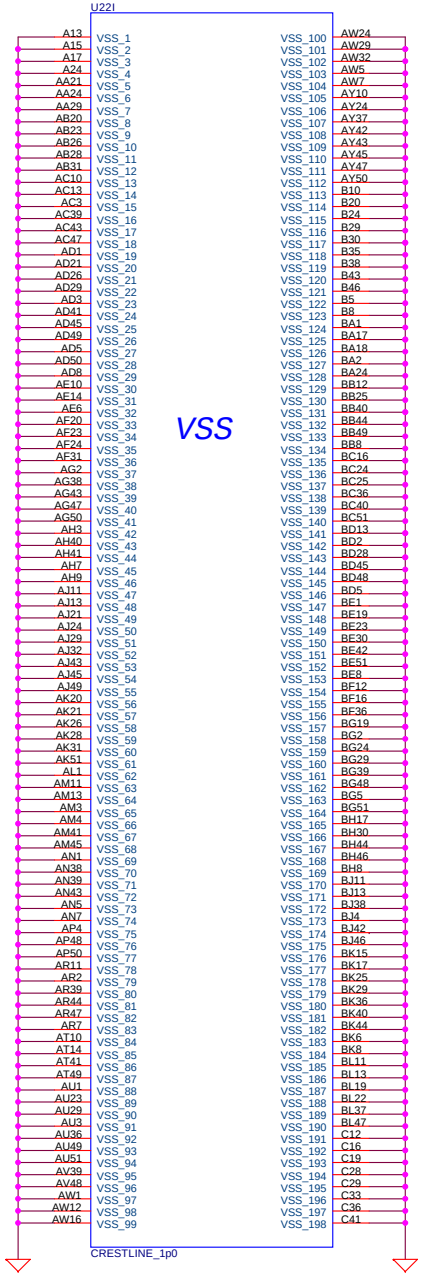


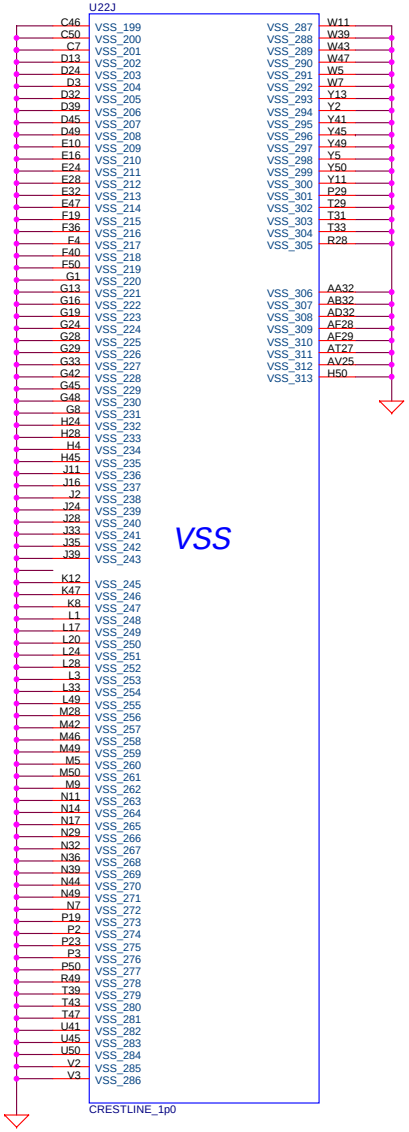


| Security Classification | Compal Secret Data | | |
|---|---|---|---|
| Issued Date | 2006/08/04 | Deciphered Date | 2006/10/06 |

THIS SHEET OF ENGINEERING DRAWING IS THE PROPRIETARY PROPERTY OF COMPAL ELECTRONICS, INC. AND CONTAINS CONFIDENTIAL AND TRADE SECRET INFORMATION. THIS SHEET MAY NOT BE TRANSFERRED FROM THE CUSTODY OF THE COMPETENT DIVISION OF R&D DEPARTMENT EXCEPT AS AUTHORIZED BY COMPAL ELECTRONICS, INC. NEITHER THIS SHEET NOR THE INFORMATION IT CONTAINS MAY BE USED BY OR DISCLOSED TO ANY THIRD PARTY WITHOUT PRIOR WRITTEN CONSENT OF COMPAL ELECTRONICS, INC.

**Compal Electronics, Inc.**

Title: **CRESTLINE((6/6)-PWR/GND**

Size: Custom | Document Number: *IGT30 LA-3571P* | Rev: 0.1

Date: Monday, December 25, 2006 | Sheet 12 of 47

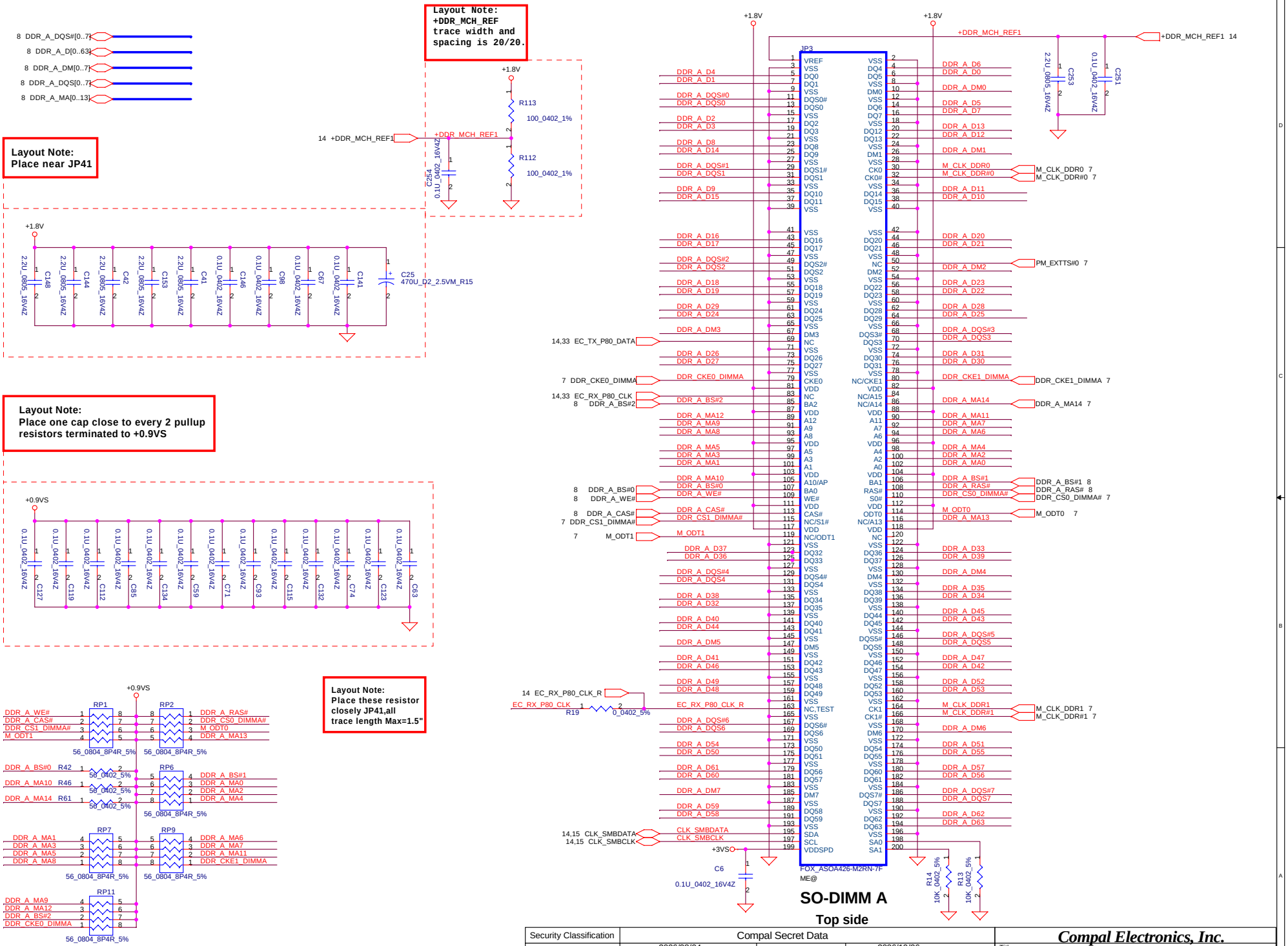


| Security Classification | Compal Secret Data | | |
|---|---|---|---|
| Issued Date | 2006/08/04 | Deciphered Date | 2006/10/06 |

THIS SHEET OF ENGINEERING DRAWING IS THE PROPRIETARY PROPERTY OF COMPAL ELECTRONICS, INC. AND CONTAINS CONFIDENTIAL AND TRADE SECRET INFORMATION. THIS SHEET MAY NOT BE TRANSFERRED FROM THE CUSTODY OF THE COMPETENT DIVISION OF R&D DEPARTMENT EXCEPT AS AUTHORIZED BY COMPAL ELECTRONICS, INC. NEITHER THIS SHEET NOR THE INFORMATION IT CONTAINS MAY BE USED BY OR DISCLOSED TO ANY THIRD PARTY WITHOUT PRIOR WRITTEN CONSENT OF COMPAL ELECTRONICS, INC.

**Compal Electronics, Inc.**

Title: **DDRII-SODIMM SLOT1**

Size: Custom | Document Number: IGT30 LA-3571P | Rev: 0.1

Date: Monday, December 25, 2006 | Sheet 13 of 47

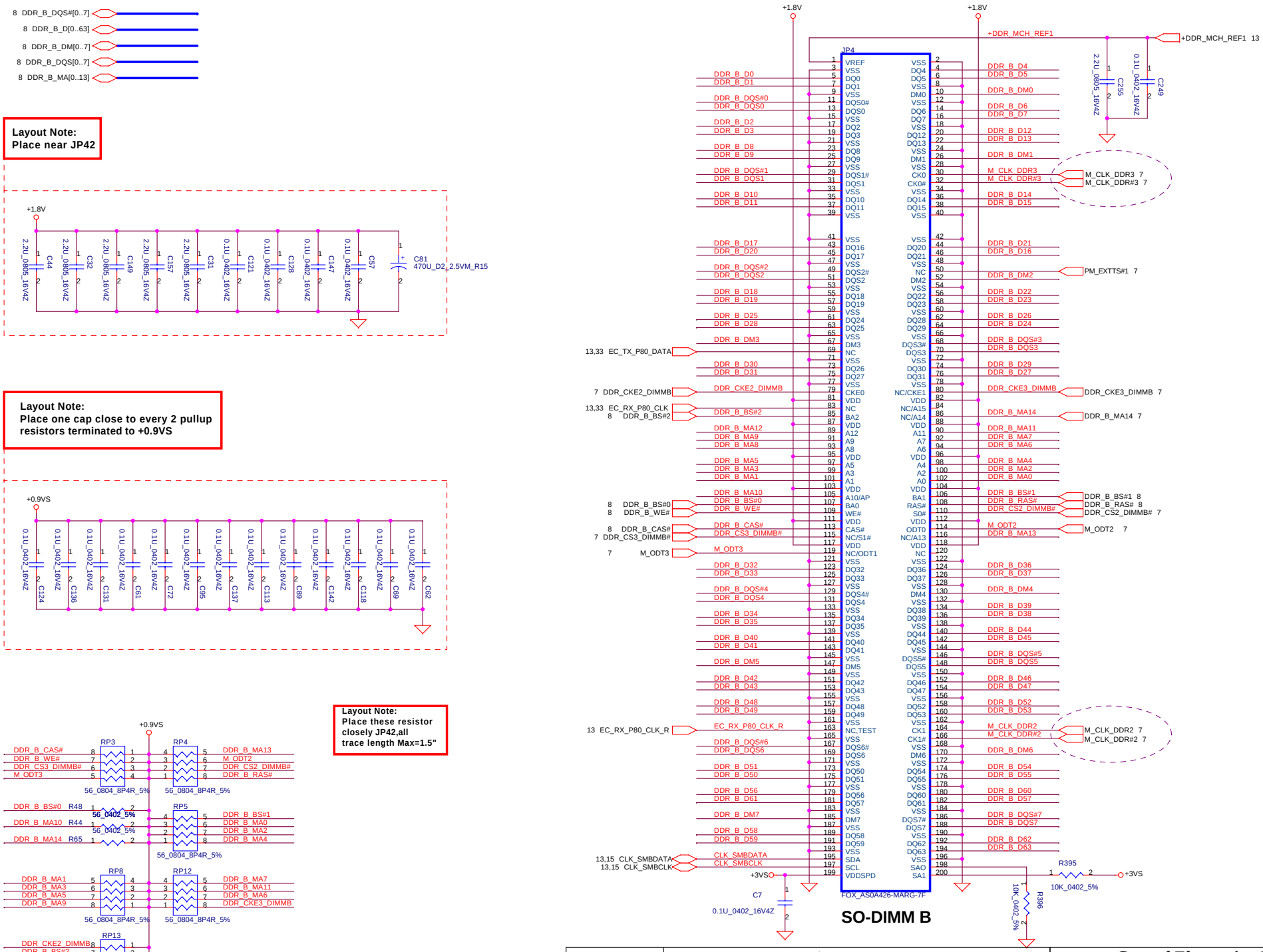


| Security Classification | Compal Secret Data | | |
|---|---|---|---|
| Issued Date | 2006/08/04 | Deciphered Date | 2006/10/06 |

THIS SHEET OF ENGINEERING DRAWING IS THE PROPRIETARY PROPERTY OF COMPAL ELECTRONICS, INC. AND CONTAINS CONFIDENTIAL AND TRADE SECRET INFORMATION. THIS SHEET MAY NOT BE TRANSFERRED FROM THE CUSTODY OF THE COMPETENT DIVISION OF R&D DEPARTMENT EXCEPT AS AUTHORIZED BY COMPAL ELECTRONICS, INC. NEITHER THIS SHEET NOR THE INFORMATION IT CONTAINS MAY BE USED BY OR DISCLOSED TO ANY THIRD PARTY WITHOUT PRIOR WRITTEN CONSENT OF COMPAL ELECTRONICS, INC.

**Compal Electronics, Inc.**

Title: **DDRII-SODIMM SLOT2**

Size | Document Number: *IGT30 LA-3571P* | Rev 0.1

Date: Monday, December 25, 2006 | Sheet 14 of 47

| FSLC CLKSEL2 | FSLB CLKSEL1 | FSLA CLKSEL0 | CPU MHz | SRC MHz | PCI MHz |
|---|---|---|---|---|---|
| 0 | 1 | 0 | 200 | 100 | 33.3 |
| 0 | 1 | 1 | 166 | 100 | 33.3 |

## FSB Frequency Selet:

| | | | | | | | |
|---|---|---|---|---|---|---|---|
| CPU Driven | Stuff | R919 | R940 | R956 | | | |
| *(Default) | No Stuff | R914 | R921 | R930 | R943 | R949 | R954 |
| 667MHz | Stuff | R959 | R930 | R914 | | | |
| | No Stuff | R919<br>R949 | R940<br>R943 | R956<br>R921 | | | |
| 800MHz | Stuff | R959 | R930 | R921 | | | |
| | No Stuff | R919<br>R949 | R940<br>R943 | R956<br>R914 | | | |

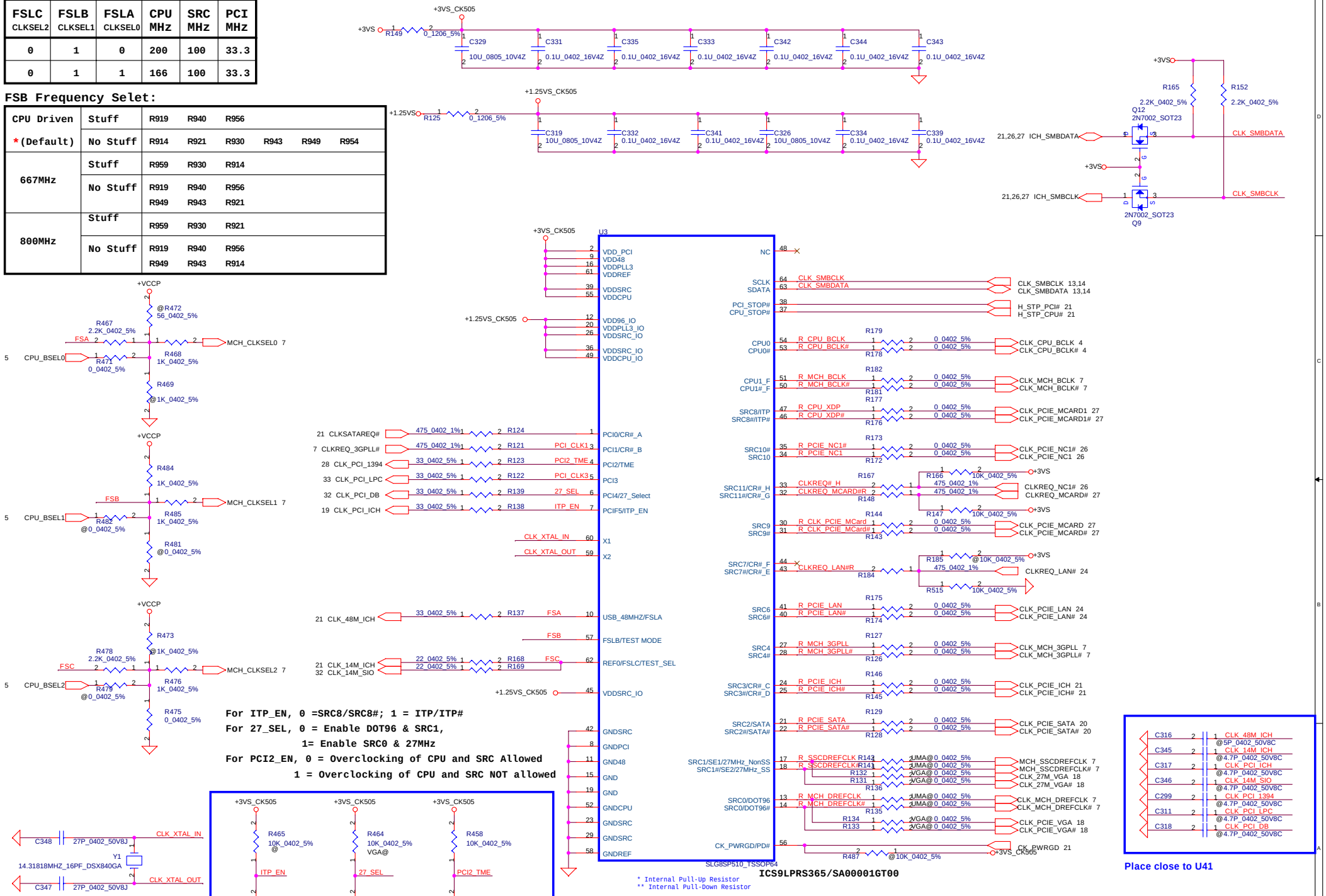


| Security Classification | Compal Secret Data | | |
|---|---|---|---|
| Issued Date | 2006/08/04 | Deciphered Date | 2006/10/06 |

THIS SHEET OF ENGINEERING DRAWING IS THE PROPRIETARY PROPERTY OF COMPAL ELECTRONICS, INC. AND CONTAINS CONFIDENTIAL AND TRADE SECRET INFORMATION. THIS SHEET MAY NOT BE TRANSFERRED FROM THE CUSTODY OF THE COMPETENT DIVISION OF R&D DEPARTMENT EXCEPT AS AUTHORIZED BY COMPAL ELECTRONICS, INC. NEITHER THIS SHEET NOR THE INFORMATION IT CONTAINS MAY BE USED BY OR DISCLOSED TO ANY THIRD PARTY WITHOUT PRIOR WRITTEN CONSENT OF COMPAL ELECTRONICS, INC.

**Compal Electronics, Inc.**

Title: **Clock generator**

Size: | Document Number: IGT30 LA-3571P | Rev: 0.1

Date: Monday, December 25, 2006 | Sheet 15 of 47

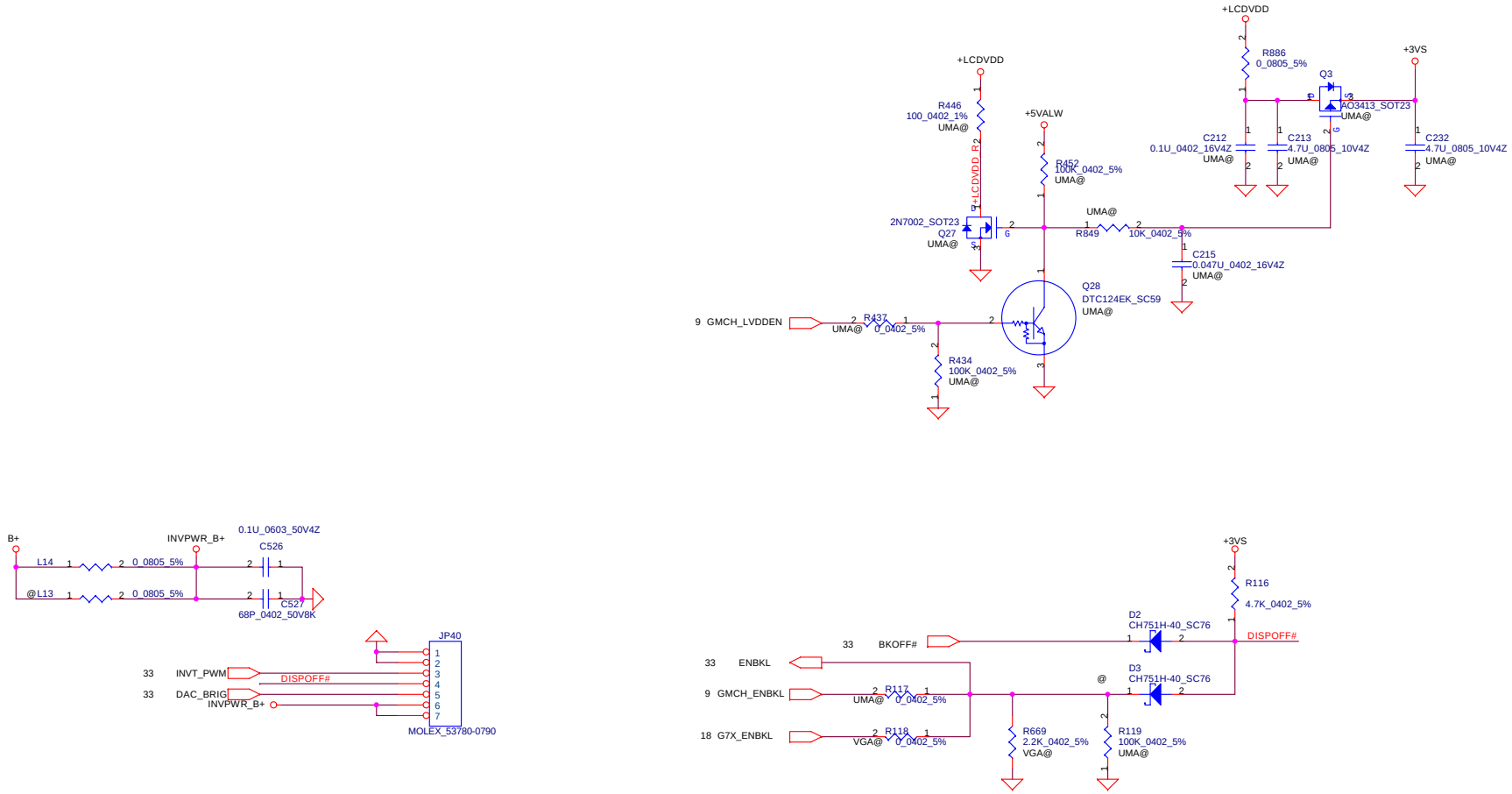


| Security Classification | Compal Secret Data | | |
|---|---|---|---|
| Issued Date | 2006/08/04 | Deciphered Date | 2006/10/06 |

THIS SHEET OF ENGINEERING DRAWING IS THE PROPRIETARY PROPERTY OF COMPAL ELECTRONICS, INC. AND CONTAINS CONFIDENTIAL AND TRADE SECRET INFORMATION. THIS SHEET MAY NOT BE TRANSFERED FROM THE CUSTODY OF THE COMPETENT DIVISION OF R&D DEPARTMENT EXCEPT AS AUTHORIZED BY COMPAL ELECTRONICS, INC. NEITHER THIS SHEET NOR THE INFORMATION IT CONTAINS MAY BE USED BY OR DISCLOSED TO ANY THIRD PARTY WITHOUT PRIOR WRITTEN CONSENT OF COMPAL ELECTRONICS, INC.

**Compal Electronics, Inc.**

Title: **LVDS Connector**

Size: Custom | Document Number: *IGT30 LA-3571P* | Rev: 0.1

Date: Monday, December 25, 2006 | Sheet 16 of 47

## TV-OUT Conn.

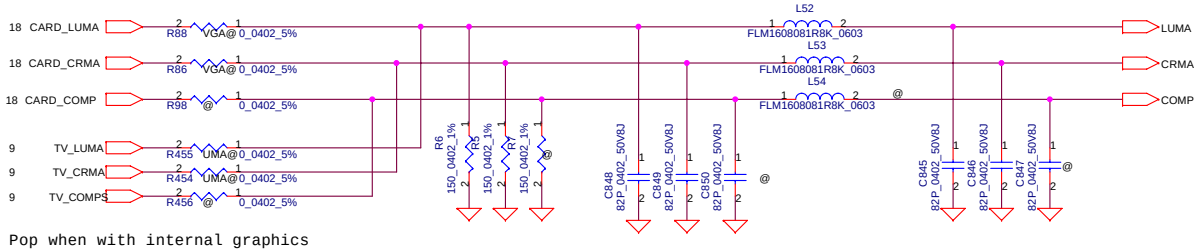


Pop when with internal graphics

## CRT Conn.

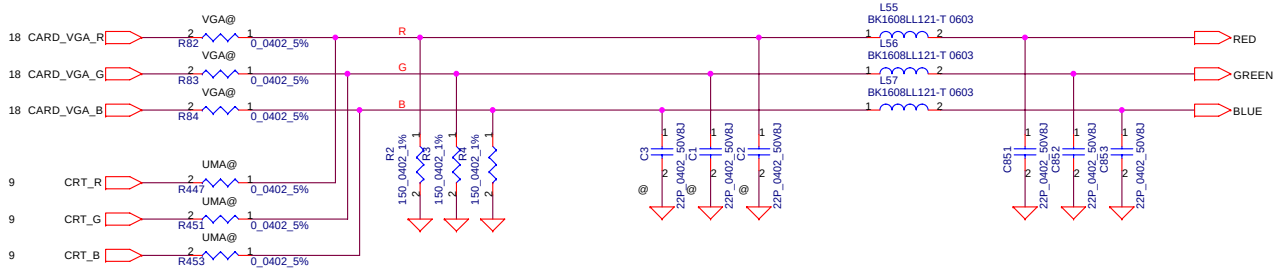


Pop when with internal graphics

# VGA I/O PORT Connector

## S-VIDEO

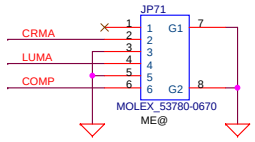


## DSUB

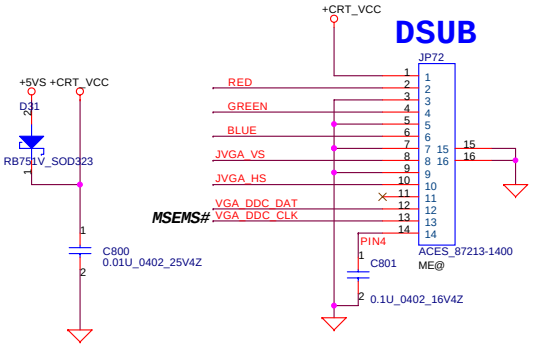


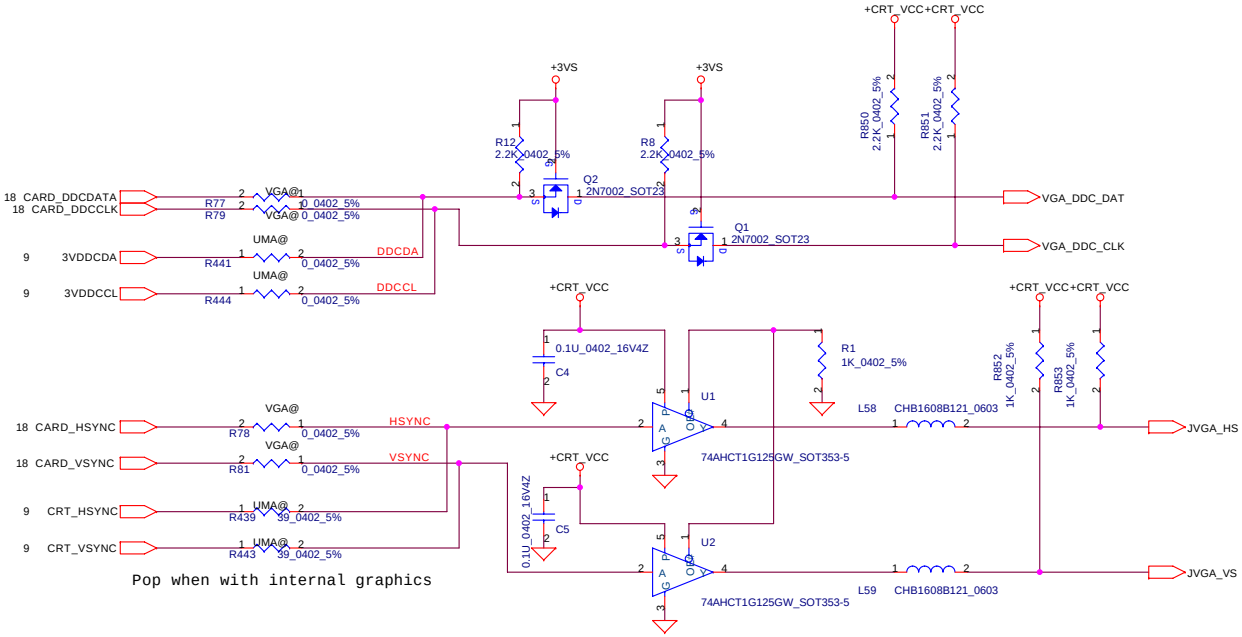


Pop when with internal graphics

## PIN ASSIGMENT

| PIN | D-SUB | FUNCTION | PIN | SVIDEO | FUNCTION |
|---|---|---|---|---|---|
| 1 | 9 | +CRT_VCC | 1 | 1 | NC |
| 2 | 1 | RED | 2 | 4 | CRMA |
| 3 | 6 | GND | 3 | 2 | GND |
| 4 | 2 | GREEN | 4 | 3 | LUMA |
| 5 | 7 | GND | 5 | 5 | GND |
| 6 | 3 | BLUE | 6 | 6 | CVBS |
| 7 | 8 | GND | | | |
| 8 | 14 | VSYNC | | | |
| 9 | 10 | GND | | | |
| 10 | 13 | HSYNC | | | |
| 11 | 11 | SENSE | | | |
| 12 | 12 | SM_DAT | | | |
| 13 | 15 | SM_CLK | | | |
| 14 | 4 | PIN4 | | | |

| | | | |
|---|---|---|---|
| Security Classification | Compal Secret Data | | |
| Issued Date | 2006/08/04 | Deciphered Date | 2006/10/06 |

THIS SHEET OF ENGINEERING DRAWING IS THE PROPRIETARY PROPERTY OF COMPAL ELECTRONICS, INC. AND CONTAINS CONFIDENTIAL AND TRADE SECRET INFORMATION. THIS SHEET MAY NOT BE TRANSFERRED FROM THE CUSTODY OF THE COMPETENT DIVISION OF R&D DEPARTMENT EXCEPT AS AUTHORIZED BY COMPAL ELECTRONICS, INC. NEITHER THIS SHEET NOR THE INFORMATION IT CONTAINS MAY BE USED BY OR DISCLOSED TO ANY THIRD PARTY WITHOUT PRIOR WRITTEN CONSENT OF COMPAL ELECTRONICS, INC.

Compal Electronics, Inc.

Title: CRT & TVout Connector

Size: Custom | Document Number: IGT30 LA-3571P | Rev: 0.1

Date: Monday, December 25, 2006 | Sheet 17 of 47

**MAX. 4.06A @ 1.8V**

**MAX. 130mA @ 2.5V**

**MAX. 655mA @ 3.3V**

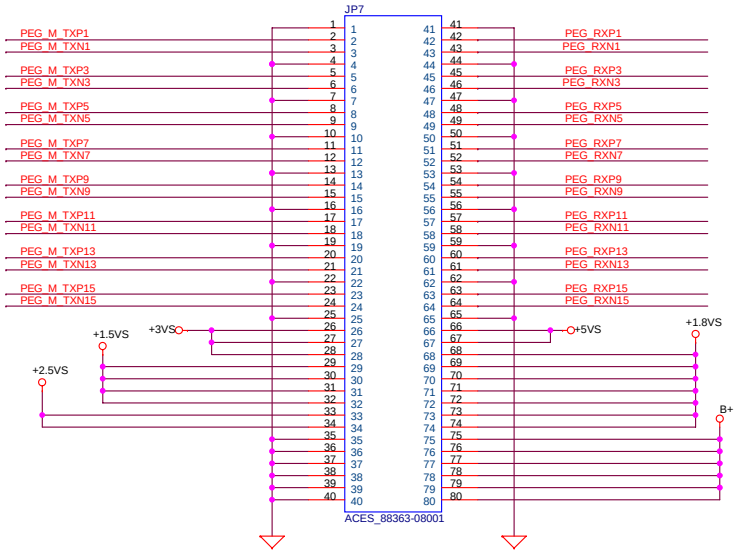


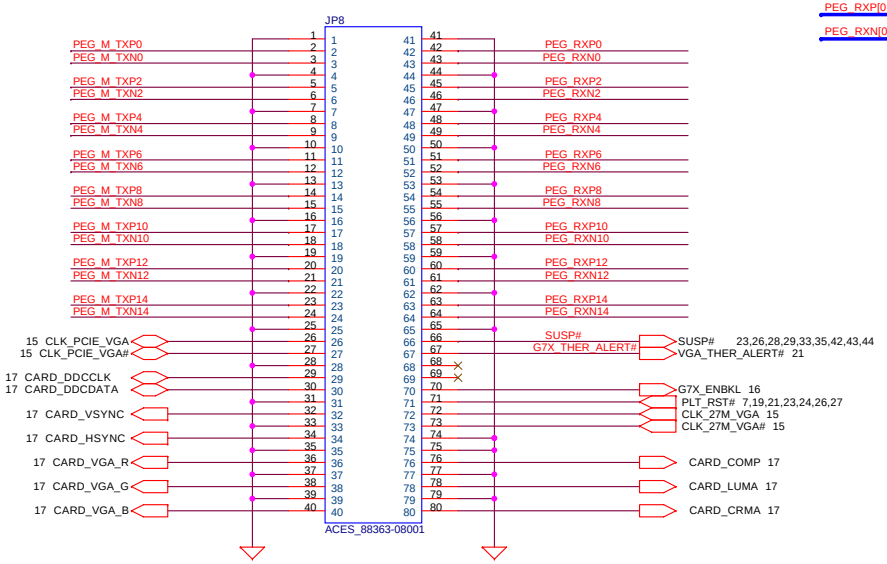


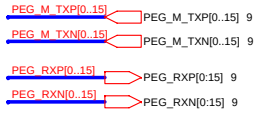


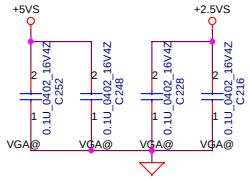


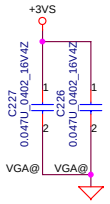


THIS SHEET OF ENGINEERING DRAWING IS THE PROPRIETARY PROPERTY OF COMPAL ELECTRONICS, INC. AND CONTAINS CONFIDENTIAL AND TRADE SECRET INFORMATION. THIS SHEET MAY NOT BE TRANSFERED FROM THE CUSTODY OF THE COMPETENT DIVISION OF R&D DEPARTMENT EXCEPT AS AUTHORIZED BY COMPAL ELECTRONICS, INC. NEITHER THIS SHEET NOR THE INFORMATION IT CONTAINS MAY BE USED BY OR DISCLOSED TO ANY THIRD PARTY WITHOUT PRIOR WRITTEN CONSENT OF COMPAL ELECTRONICS, INC.

| | | |
|---|---|---|
| Compal Electronics, Inc. | | |
| Title: VGA/B connector | | |
| Size: Custom | Document Number: IGT30 LA-3571P | Rev: 0.1 |
| Date: Monday, December 25, 2006 | Sheet 18 of 47 | |

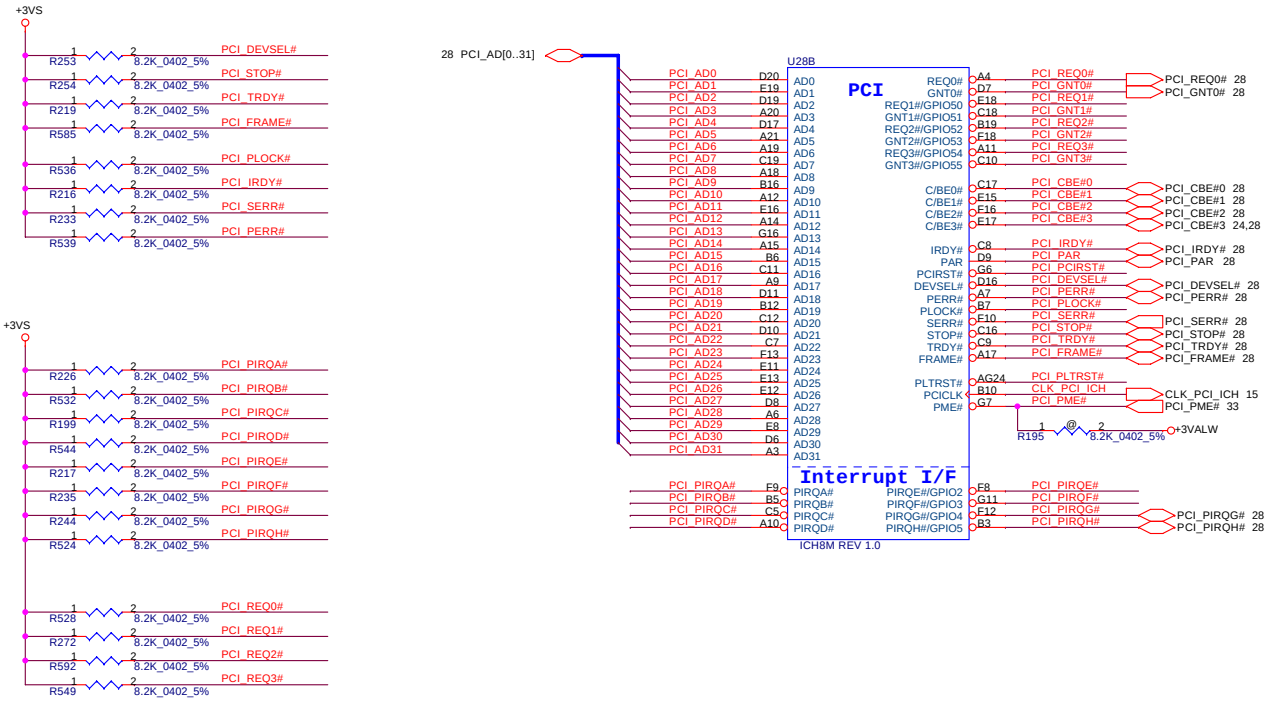


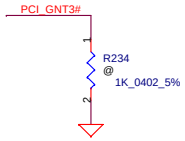


| A16 swap override Strap | |
|---|---|
| PCI_GNT3# | Low= A16 swap override Enble<br>High= Default * |

| Boot BIOS Strap | | |
|---|---|---|
| PCI_GNT0# | SPI_CS#1 | Boot BIOS Location |
| 0 | 1 | SPI |
| 1 | 0 | PCI |
| 1 | 1 | LPC * |

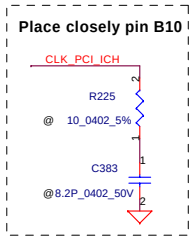


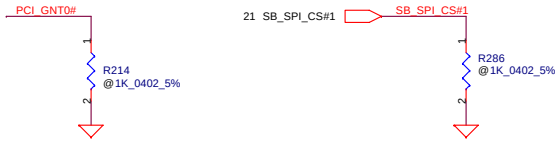


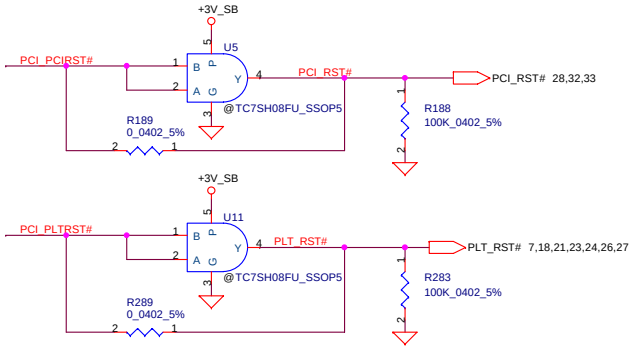


| Security Classification | Compal Secret Data | | |
|---|---|---|---|
| Issued Date | 2006/08/04 | Deciphered Date | 2006/10/06 |

THIS SHEET OF ENGINEERING DRAWING IS THE PROPRIETARY PROPERTY OF COMPAL ELECTRONICS, INC. AND CONTAINS CONFIDENTIAL AND TRADE SECRET INFORMATION. THIS SHEET MAY NOT BE TRANSFERRED FROM THE CUSTODY OF THE COMPETENT DIVISION OF R&D DEPARTMENT EXCEPT AS AUTHORIZED BY COMPAL ELECTRONICS, INC. NEITHER THIS SHEET NOR THE INFORMATION IT CONTAINS MAY BE USED BY OR DISCLOSED TO ANY THIRD PARTY WITHOUT PRIOR WRITTEN CONSENT OF COMPAL ELECTRONICS, INC.

**Compal Electronics, Inc.**

Title: **ICH8(1/4)-PCI/INT**

Size | Document Number: *IGT30 LA-3571P* | Rev 0.1

Date: Monday, December 25, 2006 | Sheet 19 of 47

**ICH8M Internal VR Enable Strap**
**(Internal VR for VccSus1.05, VccSus1.5, VccCL1.5)**

| | |
|---|---|
| LAN100_SLP | Low = Internal VR Disabled<br>High = Internal VR Enabled(Default) |
| ICH_INTVRMEN | |

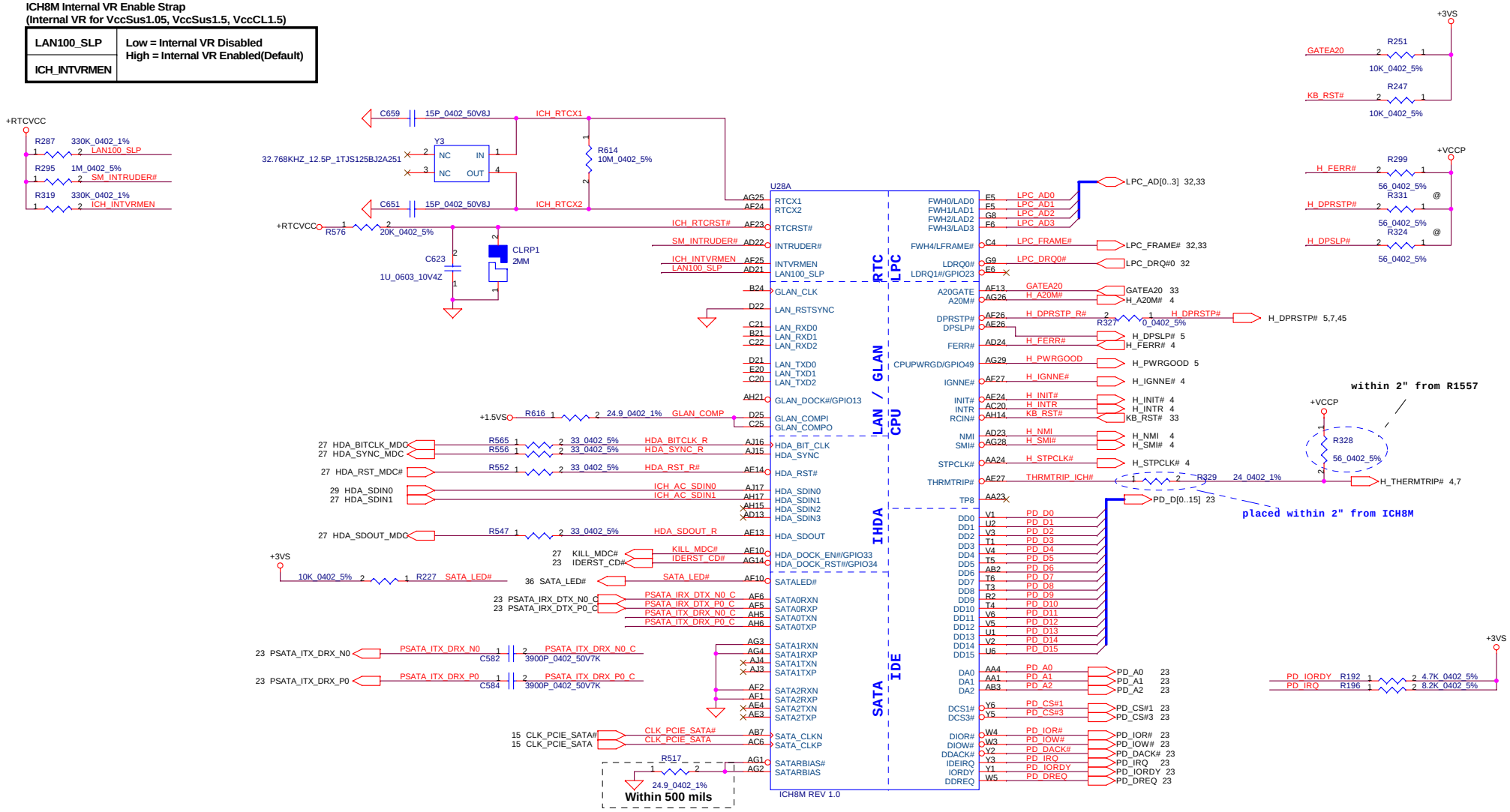


## XOR CHAIN ENTRANCE STRAP:RSVD

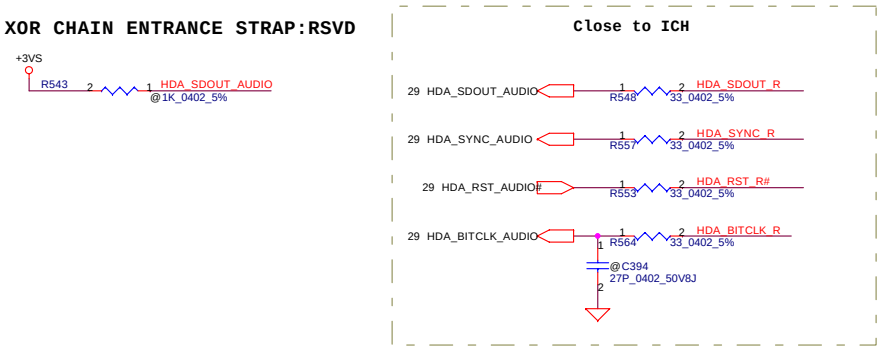


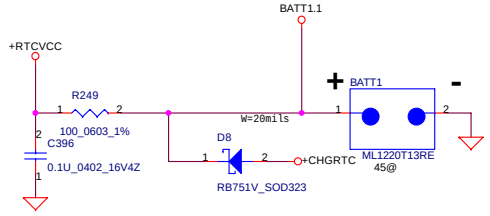


| | | | |
|---|---|---|---|
| Security Classification | Compal Secret Data | | |
| Issued Date | 2006/08/04 | Deciphered Date | 2006/10/06 |

THIS SHEET OF ENGINEERING DRAWING IS THE PROPRIETARY PROPERTY OF COMPAL ELECTRONICS, INC. AND CONTAINS CONFIDENTIAL AND TRADE SECRET INFORMATION. THIS SHEET MAY NOT BE TRANSFERED FROM THE CUSTODY OF THE COMPETENT DIVISION OF R&D DEPARTMENT EXCEPT AS AUTHORIZED BY COMPAL ELECTRONICS, INC. NEITHER THIS SHEET NOR THE INFORMATION IT CONTAINS MAY BE USED BY OR DISCLOSED TO ANY THIRD PARTY WITHOUT PRIOR WRITTEN CONSENT OF COMPAL ELECTRONICS, INC.

**Compal Electronics, Inc.**

Title: **ICH8(2/4)_LAN,HD,IDE,LPC**

Size: Custom | Document Number: IGT30 LA-3571P | Rev: 0.1

Date: Monday, December 25, 2006 | Sheet 20 of 47

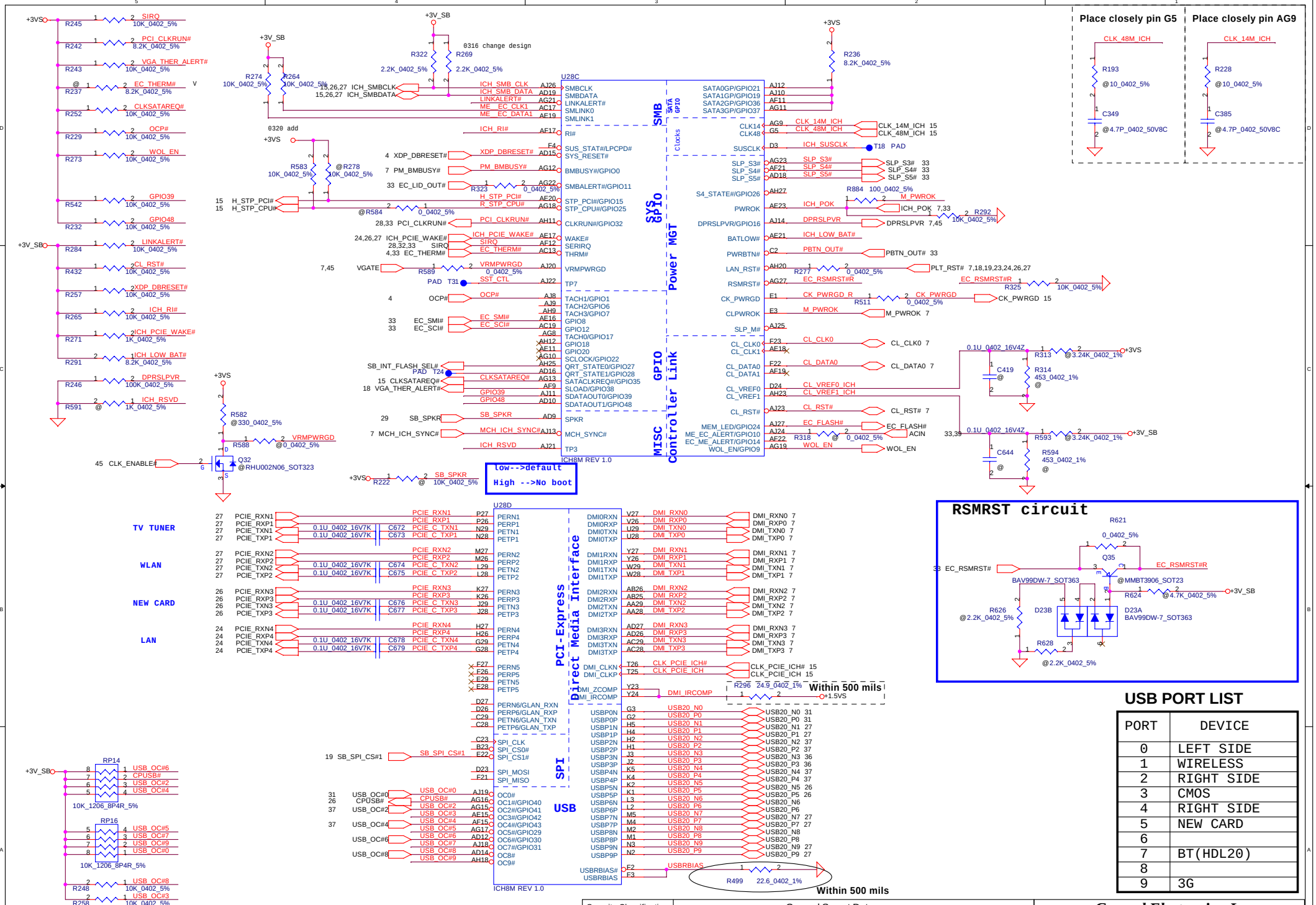


| PORT | DEVICE |
|---|---|
| 0 | LEFT SIDE |
| 1 | WIRELESS |
| 2 | RIGHT SIDE |
| 3 | CMOS |
| 4 | RIGHT SIDE |
| 5 | NEW CARD |
| 6 | |
| 7 | BT(HDL20) |
| 8 | |
| 9 | 3G |

THIS SHEET OF ENGINEERING DRAWING IS THE PROPRIETARY PROPERTY OF COMPAL ELECTRONICS, INC. AND CONTAINS CONFIDENTIAL AND TRADE SECRET INFORMATION. THIS SHEET MAY NOT BE TRANSFERRED FROM THE CUSTODY OF THE COMPETENT DIVISION OF R&D DEPARTMENT EXCEPT AS AUTHORIZED BY COMPAL ELECTRONICS, INC. NEITHER THIS SHEET NOR THE INFORMATION IT CONTAINS MAY BE USED BY OR DISCLOSED TO ANY THIRD PARTY WITHOUT PRIOR WRITTEN CONSENT OF COMPAL ELECTRONICS, INC.

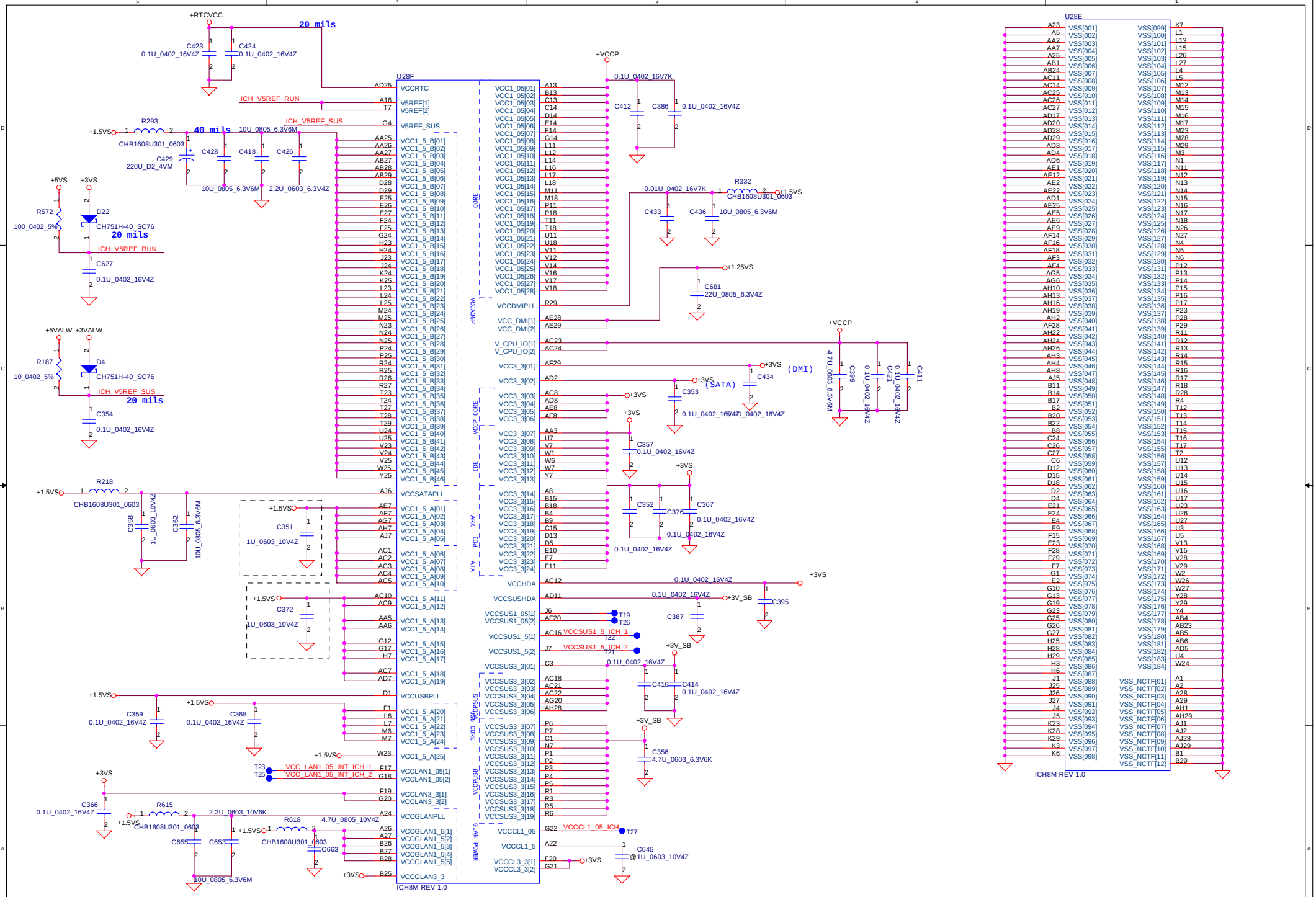


| Security Classification | Compal Secret Data | | |
|---|---|---|---|
| Issued Date | 2006/08/04 | Deciphered Date | 2006/10/06 |

THIS SHEET OF ENGINEERING DRAWING IS THE PROPRIETARY PROPERTY OF COMPAL ELECTRONICS, INC. AND CONTAINS CONFIDENTIAL AND TRADE SECRET INFORMATION. THIS SHEET MAY NOT BE TRANSFERRED FROM THE CUSTODY OF THE COMPETENT DIVISION OF R&D DEPARTMENT EXCEPT AS AUTHORIZED BY COMPAL ELECTRONICS, INC. NEITHER THIS SHEET NOR THE INFORMATION IT CONTAINS MAY BE USED BY OR DISCLOSED TO ANY THIRD PARTY WITHOUT PRIOR WRITTEN CONSENT OF COMPAL ELECTRONICS, INC.

**Compal Electronics, Inc.**

Title: **ICH8(4/4)_POWER&GND**

Size: Custom | Document Number: *IGT30 LA-3571P* | Rev: 0.1

Date: Monday, December 25, 2006 | Sheet 22 of 47

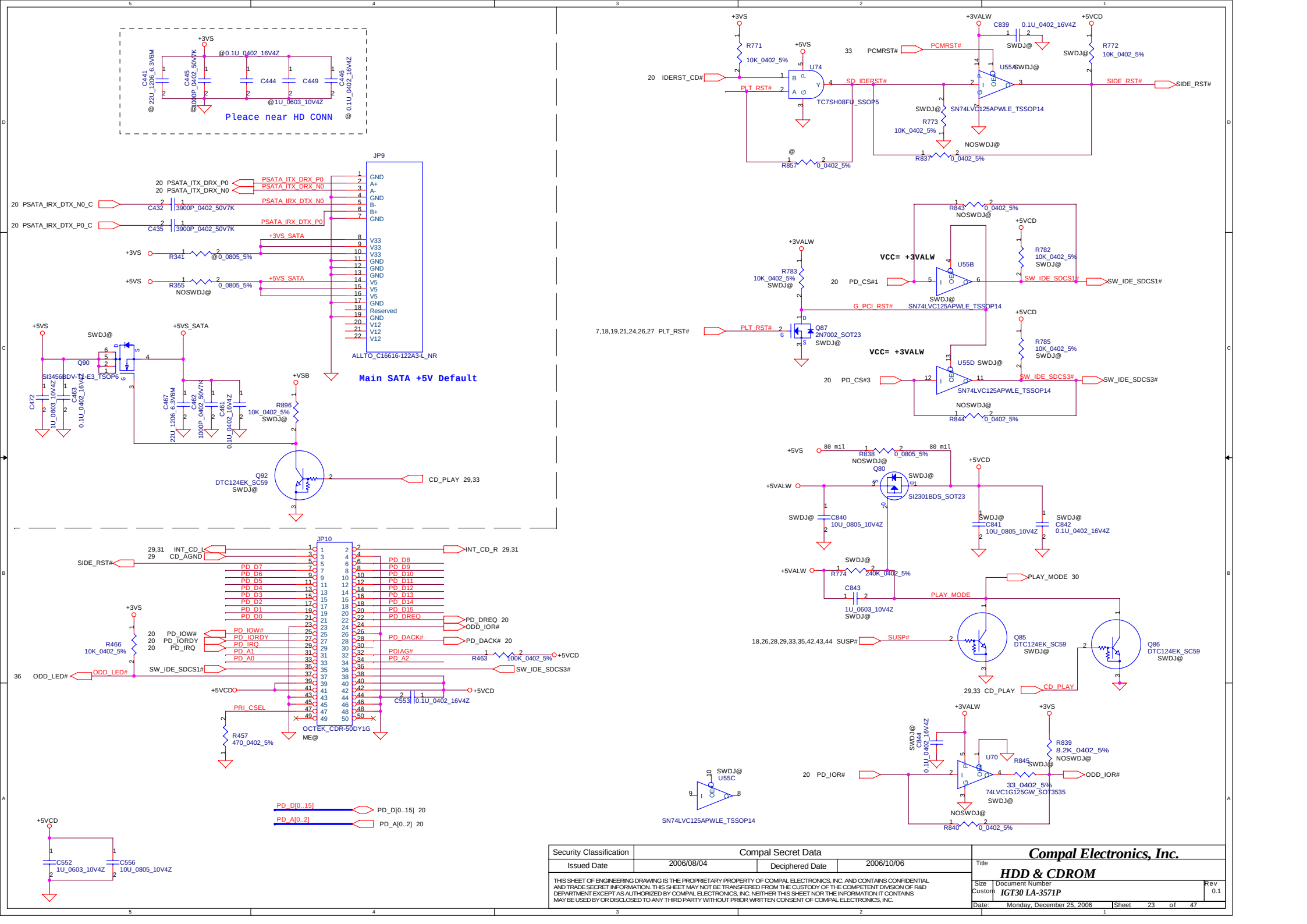
Pleace near HD CONN
Main SATA +5V Default
JP9
ALLTO_C16616-122A3-L_NR
JP10
OCTEK_CDR-50DY1G
ME@
SN74LVC125APWLE_TSSOP14
TC7SH08FU_SSOP5
SI3456BDV-T1-E3_TSOP6
SI2301BDS_SOT23
DTC124EK_SC59
74LVC1G125GW_SOT3535
Security Classification
Compal Secret Data
Issued Date
2006/08/04
Deciphered Date
2006/10/06
THIS SHEET OF ENGINEERING DRAWING IS THE PROPRIETARY PROPERTY OF COMPAL ELECTRONICS, INC. AND CONTAINS CONFIDENTIAL AND TRADE SECRET INFORMATION. THIS SHEET MAY NOT BE TRANSFERED FROM THE CUSTODY OF THE COMPETENT DIVISION OF R&D DEPARTMENT EXCEPT AS AUTHORIZED BY COMPAL ELECTRONICS, INC. NEITHER THIS SHEET NOR THE INFORMATION IT CONTAINS MAY BE USED BY OR DISCLOSED TO ANY THIRD PARTY WITHOUT PRIOR WRITTEN CONSENT OF COMPAL ELECTRONICS, INC.
Compal Electronics, Inc.
Title
HDD & CDROM
Size
Custom
Document Number
IGT30 LA-3571P
Rev
0.1
Date: Monday, December 25, 2006
Sheet 23 of 47

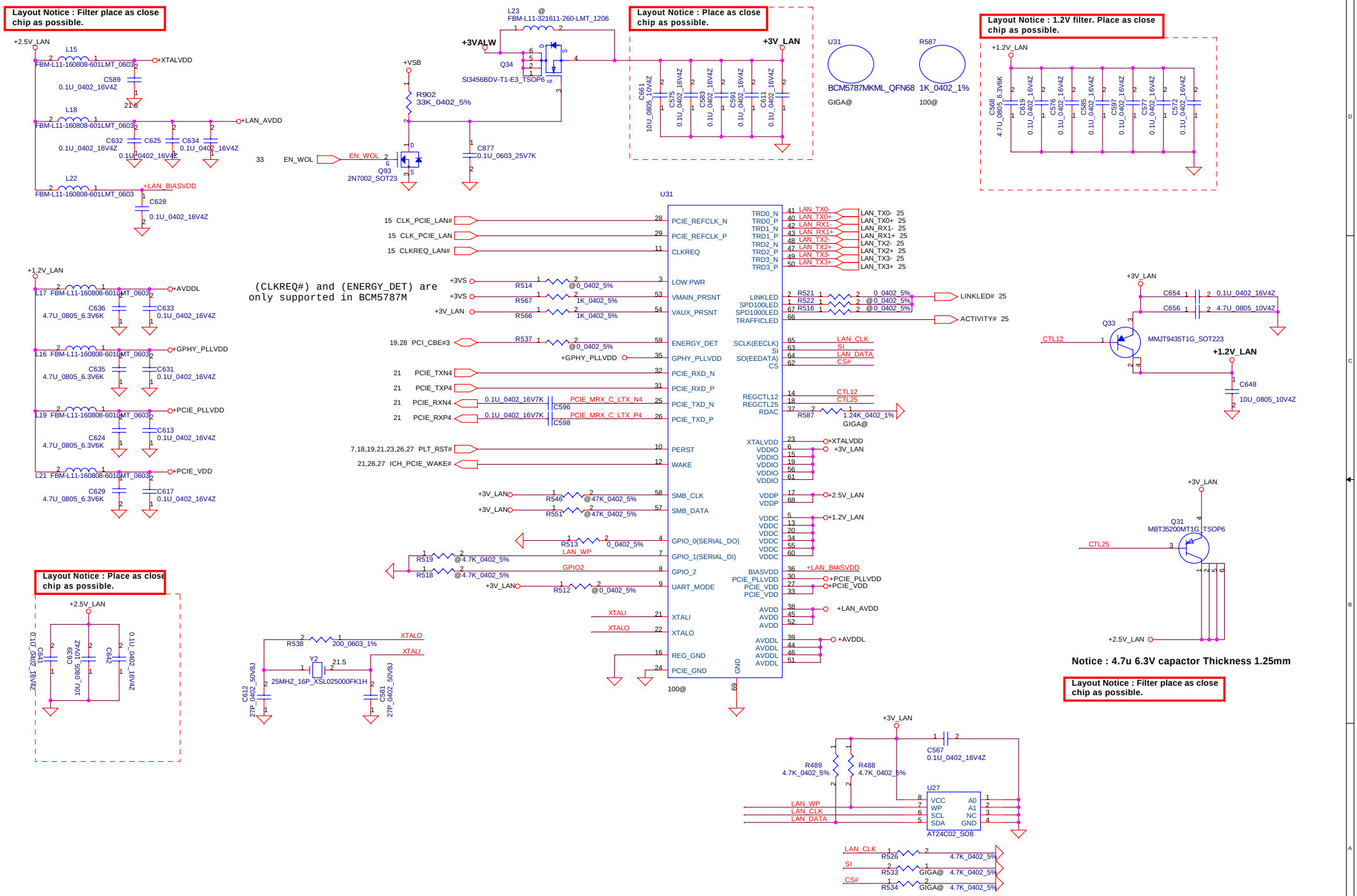


| Security Classification | Compal Secret Data | | |
|---|---|---|---|
| Issued Date | 2006/08/04 | Deciphered Date | 2006/10/06 |

THIS SHEET OF ENGINEERING DRAWING IS THE PROPRIETARY PROPERTY OF COMPAL ELECTRONICS, INC. AND CONTAINS CONFIDENTIAL AND TRADE SECRET INFORMATION. THIS SHEET MAY NOT BE TRANSFERED FROM THE CUSTODY OF THE COMPETENT DIVISION OF R&D DEPARTMENT EXCEPT AS AUTHORIZED BY COMPAL ELECTRONICS, INC. NEITHER THIS SHEET NOR THE INFORMATION IT CONTAINS MAY BE USED BY OR DISCLOSED TO ANY THIRD PARTY WITHOUT PRIOR WRITTEN CONSENT OF COMPAL ELECTRONICS, INC.

Title: **BCM5787MKML**

Size: Custom | Document Number: **IGT30 LA-3571P** | Rev: 0.1

Date: Monday, December 25, 2006 | Sheet 24 of 47

# RJ11+RJ45 CONN

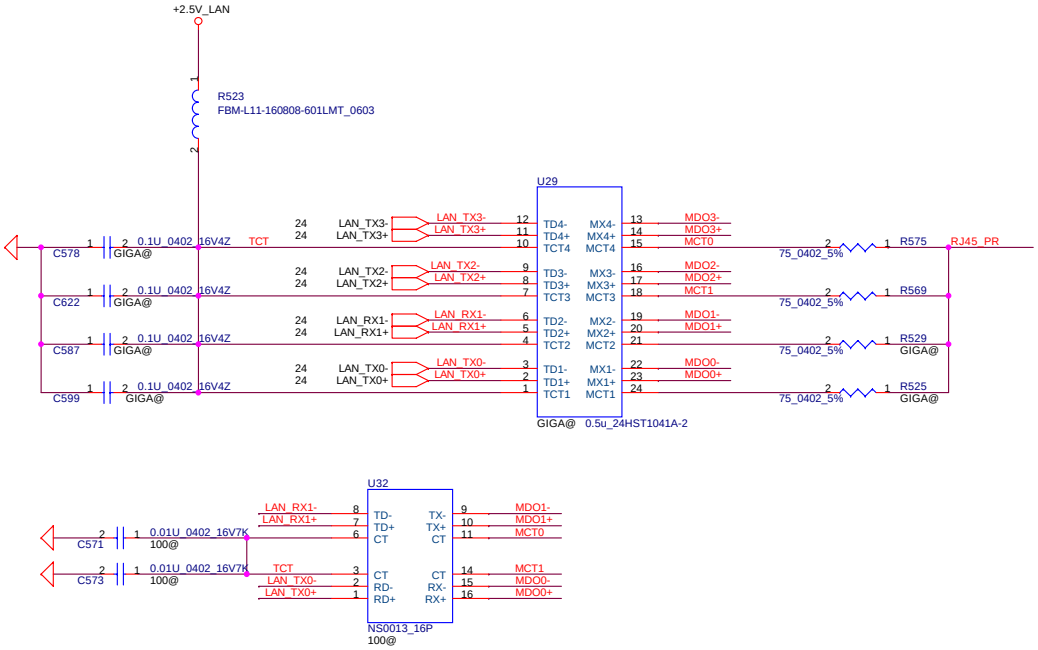


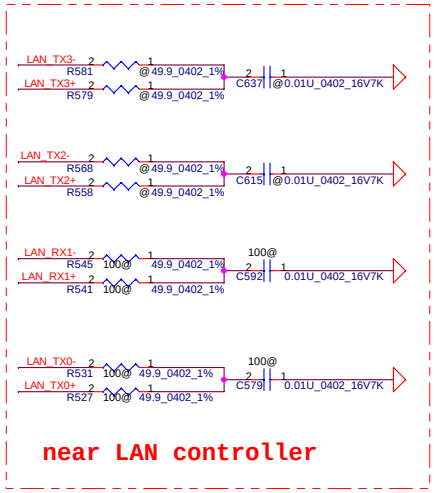


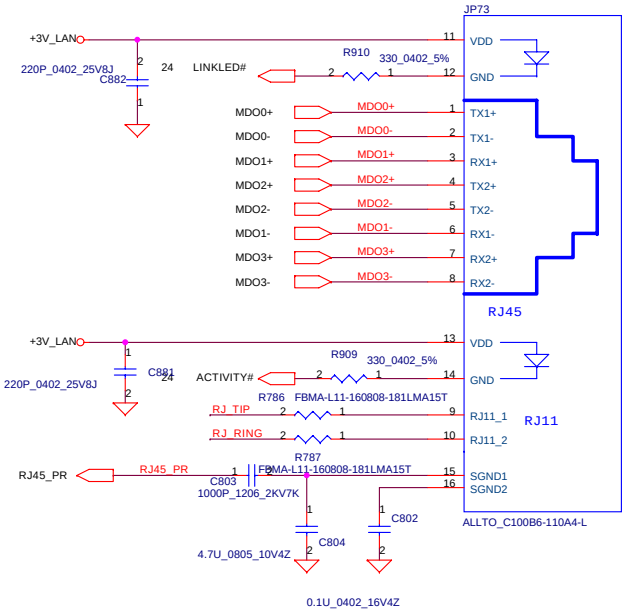


# MDC CONN

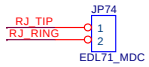


| Security Classification | Compal Secret Data | | |
|---|---|---|---|
| Issued Date | 2006/08/04 | Deciphered Date | 2006/10/06 |

THIS SHEET OF ENGINEERING DRAWING IS THE PROPRIETARY PROPERTY OF COMPAL ELECTRONICS, INC. AND CONTAINS CONFIDENTIAL AND TRADE SECRET INFORMATION. THIS SHEET MAY NOT BE TRANSFERED FROM THE CUSTODY OF THE COMPETENT DIVISION OF R&D DEPARTMENT EXCEPT AS AUTHORIZED BY COMPAL ELECTRONICS, INC. NEITHER THIS SHEET NOR THE INFORMATION IT CONTAINS MAY BE USED BY OR DISCLOSED TO ANY THIRD PARTY WITHOUT PRIOR WRITTEN CONSENT OF COMPAL ELECTRONICS, INC.

**Compal Electronics, Inc.**

Title: **LAN CONTROLLER**

Size: Custom | Document Number: *IGT30 LA-3571P* | Rev: 0.1

Date: Monday, December 25, 2006 | Sheet 25 of 47

## Express Card Power Switch

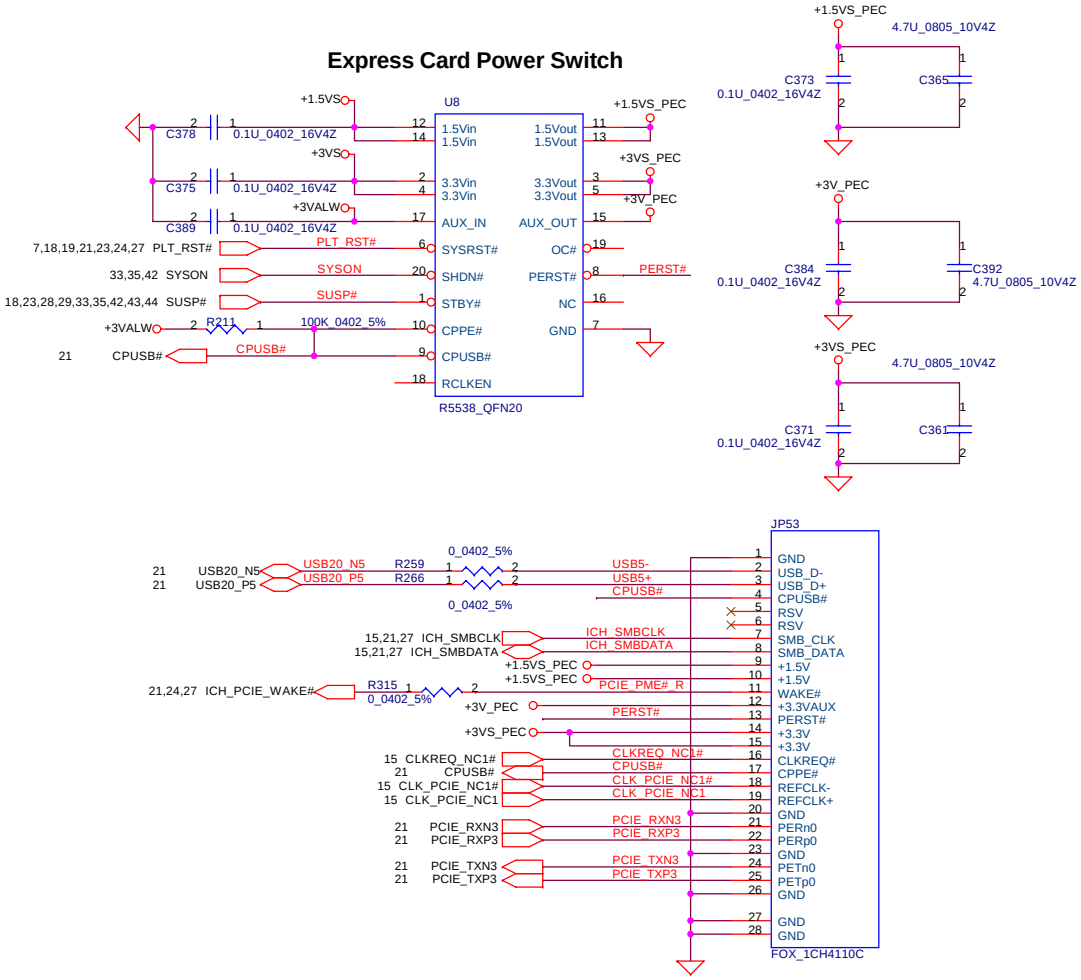


| Security Classification | Compal Secret Data | | |
|---|---|---|---|
| Issued Date | 2006/08/04 | Deciphered Date | 2006/10/06 |

THIS SHEET OF ENGINEERING DRAWING IS THE PROPRIETARY PROPERTY OF COMPAL ELECTRONICS, INC. AND CONTAINS CONFIDENTIAL AND TRADE SECRET INFORMATION. THIS SHEET MAY NOT BE TRANSFERED FROM THE CUSTODY OF THE COMPETENT DIVISION OF R&D DEPARTMENT EXCEPT AS AUTHORIZED BY COMPAL ELECTRONICS, INC. NEITHER THIS SHEET NOR THE INFORMATION IT CONTAINS MAY BE USED BY OR DISCLOSED TO ANY THIRD PARTY WITHOUT PRIOR WRITTEN CONSENT OF COMPAL ELECTRONICS, INC.

Compal Electronics, Inc.

Title: CardBus Socket

Size: Custom | Document Number: IGT30 LA-3571P | Rev: 0.1

Date: Monday, December 25, 2006 | Sheet 26 of 47

# Mini-Express Card(Slot 1-WLAN)

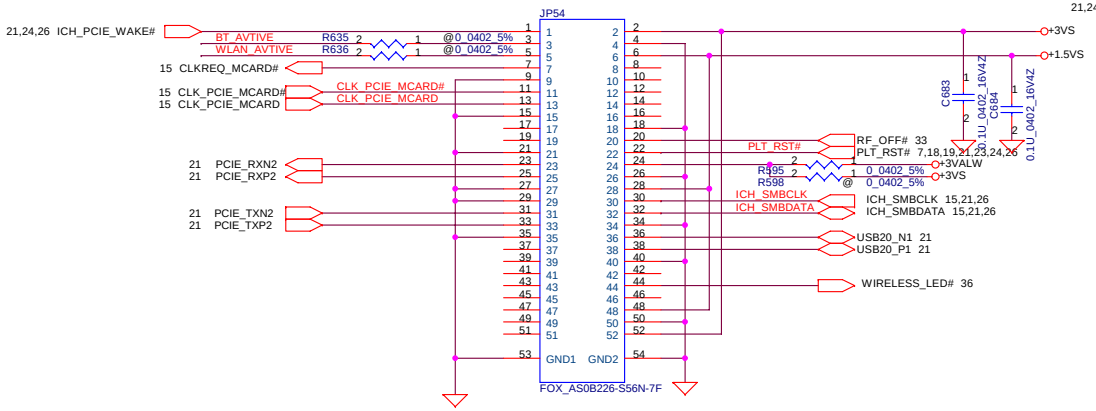


# Mini-Express Card(Slot 2-3G)

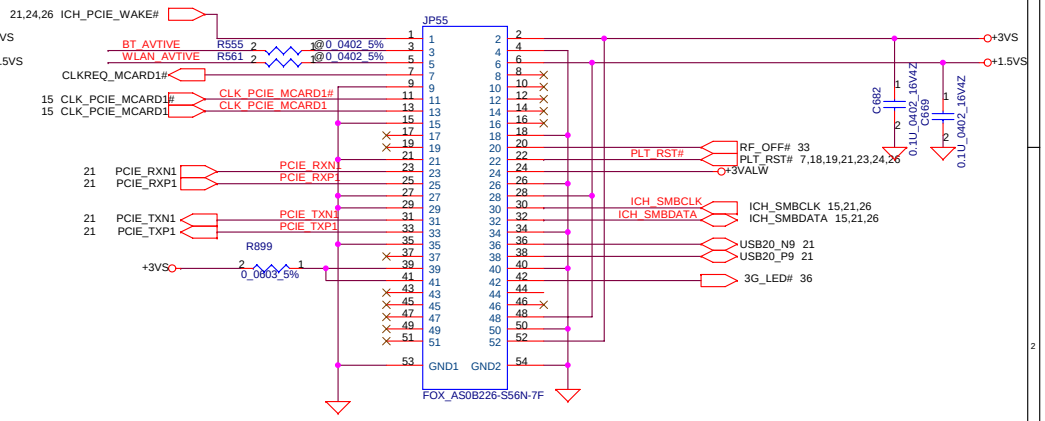


# MDC CONN.

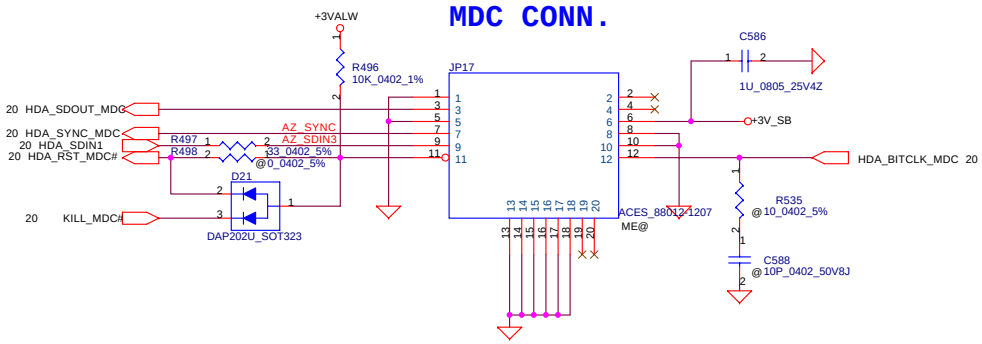


# BT MODULE CONN.

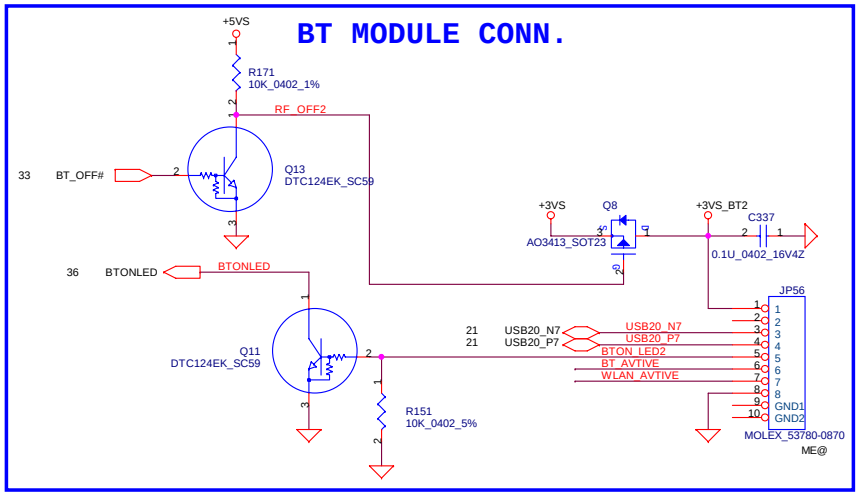


| Security Classification | Compal Secret Data | | |
|---|---|---|---|
| Issued Date | 2006/08/04 | Deciphered Date | 2006/10/06 |

THIS SHEET OF ENGINEERING DRAWING IS THE PROPRIETARY PROPERTY OF COMPAL ELECTRONICS, INC. AND CONTAINS CONFIDENTIAL AND TRADE SECRET INFORMATION. THIS SHEET MAY NOT BE TRANSFERED FROM THE CUSTODY OF THE COMPETENT DIVISION OF R&D DEPARTMENT EXCEPT AS AUTHORIZED BY COMPAL ELECTRONICS, INC. NEITHER THIS SHEET NOR THE INFORMATION IT CONTAINS MAY BE USED BY OR DISCLOSED TO ANY THIRD PARTY WITHOUT PRIOR WRITTEN CONSENT OF COMPAL ELECTRONICS, INC.

**Compal Electronics, Inc.**

Title: **Mini Card / MDC CONN**

Size: Custom | Document Number: *IGT30 LA-3571P* | Rev: 0.1

Date: Monday, December 25, 2006 | Sheet 27 of 47

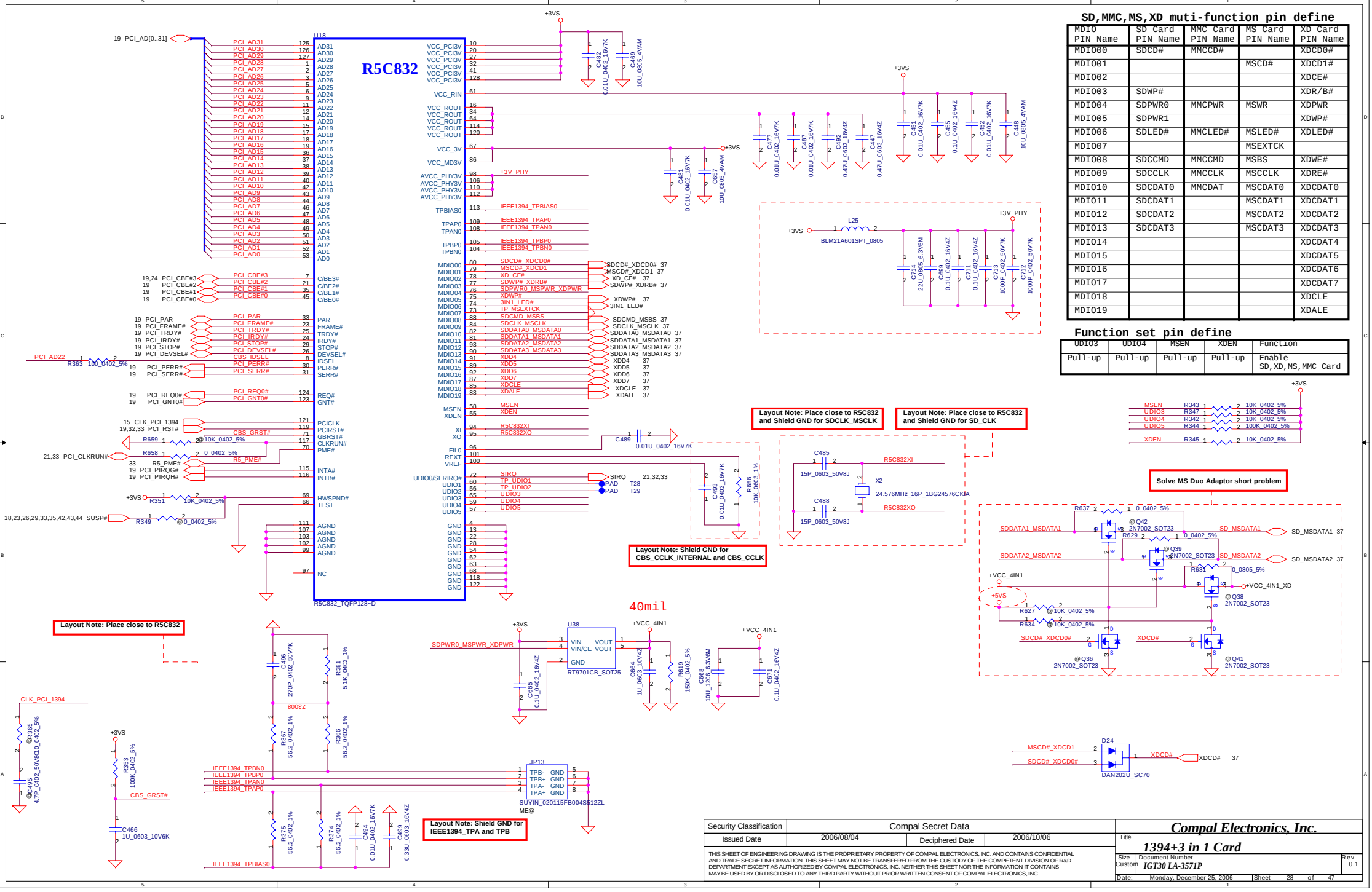


## SD,MMC,MS,XD muti-function pin define

| MDIO PIN Name | SD Card PIN Name | MMC Card PIN Name | MS Card PIN Name | XD Card PIN Name |
|---|---|---|---|---|
| MDIO00 | SDCD# | MMCCD# | | XDCD0# |
| MDIO01 | | | MSCD# | XDCD1# |
| MDIO02 | | | | XDCE# |
| MDIO03 | SDWP# | | | XDR/B# |
| MDIO04 | SDPWR0 | MMCPWR | MSWR | XDPWR |
| MDIO05 | SDPWR1 | | | XDWP# |
| MDIO06 | SDLED# | MMCLED# | MSLED# | XDLED# |
| MDIO07 | | | MSEXTCK | |
| MDIO08 | SDCCMD | MMCCMD | MSBS | XDWE# |
| MDIO09 | SDCCLK | MMCCLK | MSCCLK | XDRE# |
| MDIO10 | SDCDAT0 | MMCDAT | MSCDAT0 | XDCDAT0 |
| MDIO11 | SDCDAT1 | | MSCDAT1 | XDCDAT1 |
| MDIO12 | SDCDAT2 | | MSCDAT2 | XDCDAT2 |
| MDIO13 | SDCDAT3 | | MSCDAT3 | XDCDAT3 |
| MDIO14 | | | | XDCDAT4 |
| MDIO15 | | | | XDCDAT5 |
| MDIO16 | | | | XDCDAT6 |
| MDIO17 | | | | XDCDAT7 |
| MDIO18 | | | | XDCLE |
| MDIO19 | | | | XDALE |

## Function set pin define

| UDIO3 | UDIO4 | MSEN | XDEN | Function |
|---|---|---|---|---|
| Pull-up | Pull-up | Pull-up | Pull-up | Enable SD,XD,MS,MMC Card |

| Security Classification | Compal Secret Data | | |
|---|---|---|---|
| Issued Date | 2006/08/04 | Deciphered Date | 2006/10/06 |

THIS SHEET OF ENGINEERING DRAWING IS THE PROPRIETARY PROPERTY OF COMPAL ELECTRONICS, INC. AND CONTAINS CONFIDENTIAL AND TRADE SECRET INFORMATION. THIS SHEET MAY NOT BE TRANSFERED FROM THE CUSTODY OF THE COMPETENT DIVISION OF R&D DEPARTMENT EXCEPT AS AUTHORIZED BY COMPAL ELECTRONICS, INC. NEITHER THIS SHEET NOR THE INFORMATION IT CONTAINS MAY BE USED BY OR DISCLOSED TO ANY THIRD PARTY WITHOUT PRIOR WRITTEN CONSENT OF COMPAL ELECTRONICS, INC.

**Compal Electronics, Inc.**

Title: **1394+3 in 1 Card**

Size: Custom | Document Number: IGT30 LA-3571P | Rev: 0.1

Date: Monday, December 25, 2006 | Sheet 28 of 47

# AC97 Codec

28.7K for Module Design (VDDA = 4.702)

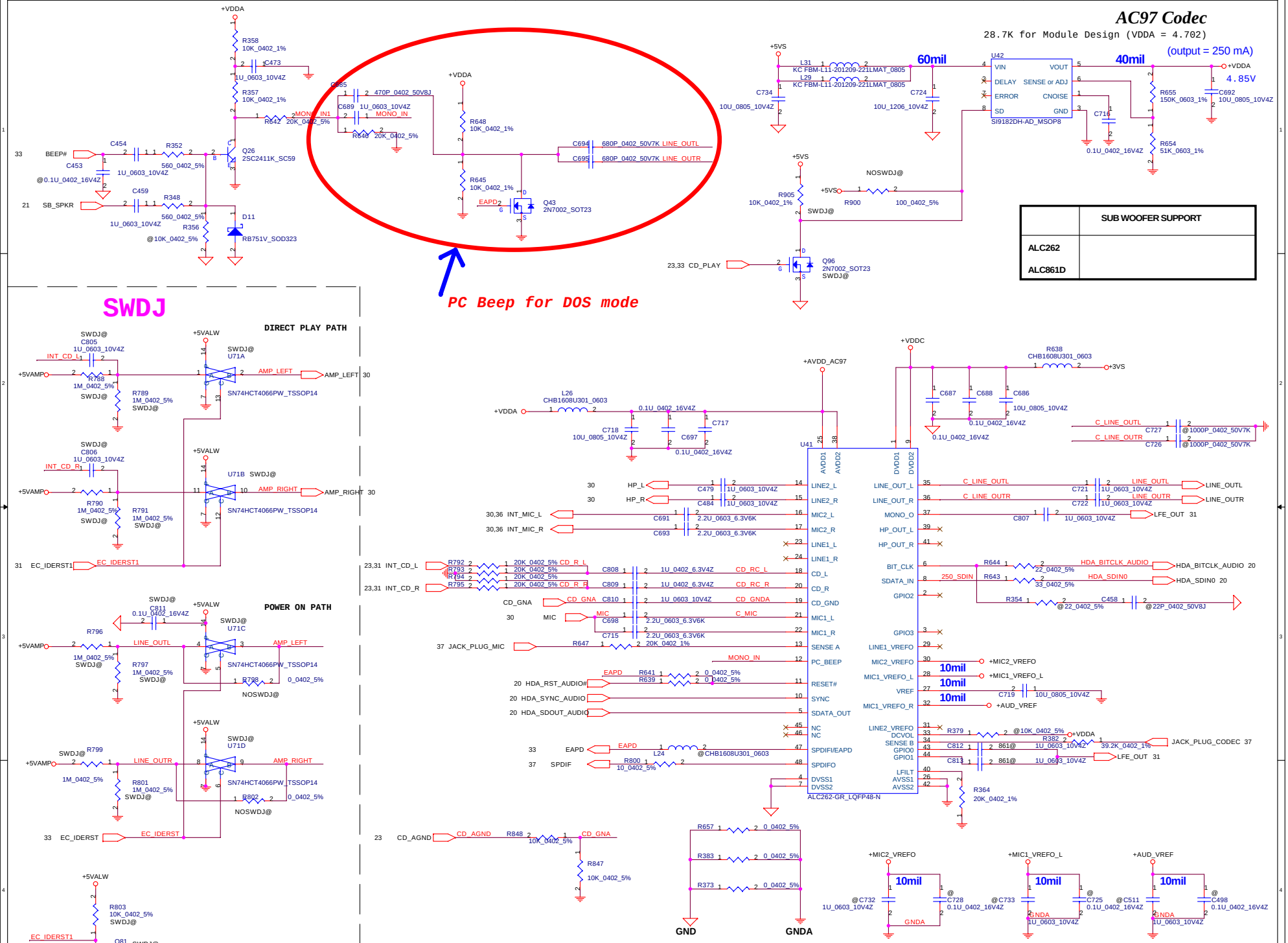


| | SUB WOOFER SUPPORT |
|---|---|
| ALC262<br>ALC861D | |

| Security Classification | Compal Secret Data | | |
|---|---|---|---|
| Issued Date | 2006/08/04 | Deciphered Date | 2006/10/06 |

THIS SHEET OF ENGINEERING DRAWING IS THE PROPRIETARY PROPERTY OF COMPAL ELECTRONICS, INC. AND CONTAINS CONFIDENTIAL AND TRADE SECRET INFORMATION. THIS SHEET MAY NOT BE TRANSFERED FROM THE CUSTODY OF THE COMPETENT DIVISION OF R&D DEPARTMENT EXCEPT AS AUTHORIZED BY COMPAL ELECTRONICS, INC. NEITHER THIS SHEET NOR THE INFORMATION IT CONTAINS MAY BE USED BY OR DISCLOSED TO ANY THIRD PARTY WITHOUT PRIOR WRITTEN CONSENT OF COMPAL ELECTRONICS, INC.

**Compal Electronics, Inc.**

Title: **ALC861 VD Codec**

Size: Custom | Document Number: IGT30 LA-3571P | Rev: 0.1

Date: Monday, December 25, 2006 | Sheet 29 of 47

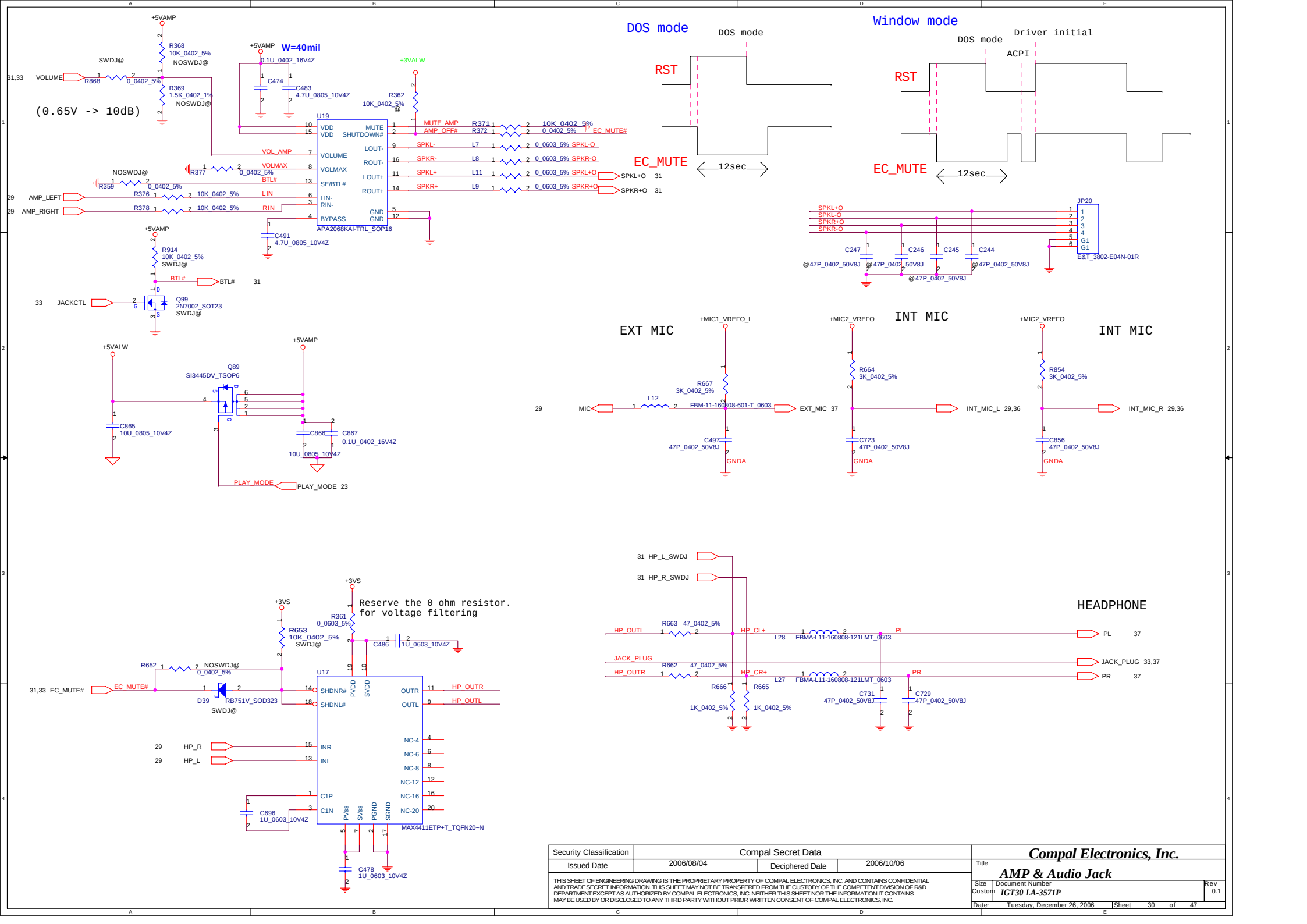


| Security Classification | Compal Secret Data | | |
|---|---|---|---|
| Issued Date | 2006/08/04 | Deciphered Date | 2006/10/06 |

THIS SHEET OF ENGINEERING DRAWING IS THE PROPRIETARY PROPERTY OF COMPAL ELECTRONICS, INC. AND CONTAINS CONFIDENTIAL AND TRADE SECRET INFORMATION. THIS SHEET MAY NOT BE TRANSFERED FROM THE CUSTODY OF THE COMPETENT DIVISION OF R&D DEPARTMENT EXCEPT AS AUTHORIZED BY COMPAL ELECTRONICS, INC. NEITHER THIS SHEET NOR THE INFORMATION IT CONTAINS MAY BE USED BY OR DISCLOSED TO ANY THIRD PARTY WITHOUT PRIOR WRITTEN CONSENT OF COMPAL ELECTRONICS, INC.

**Compal Electronics, Inc.**

Title: **AMP & Audio Jack**

Size: Custom | Document Number: *IGT30 LA-3571P* | Rev: 0.1

Date: Tuesday, December 26, 2006 | Sheet 30 of 47

# SWDJ

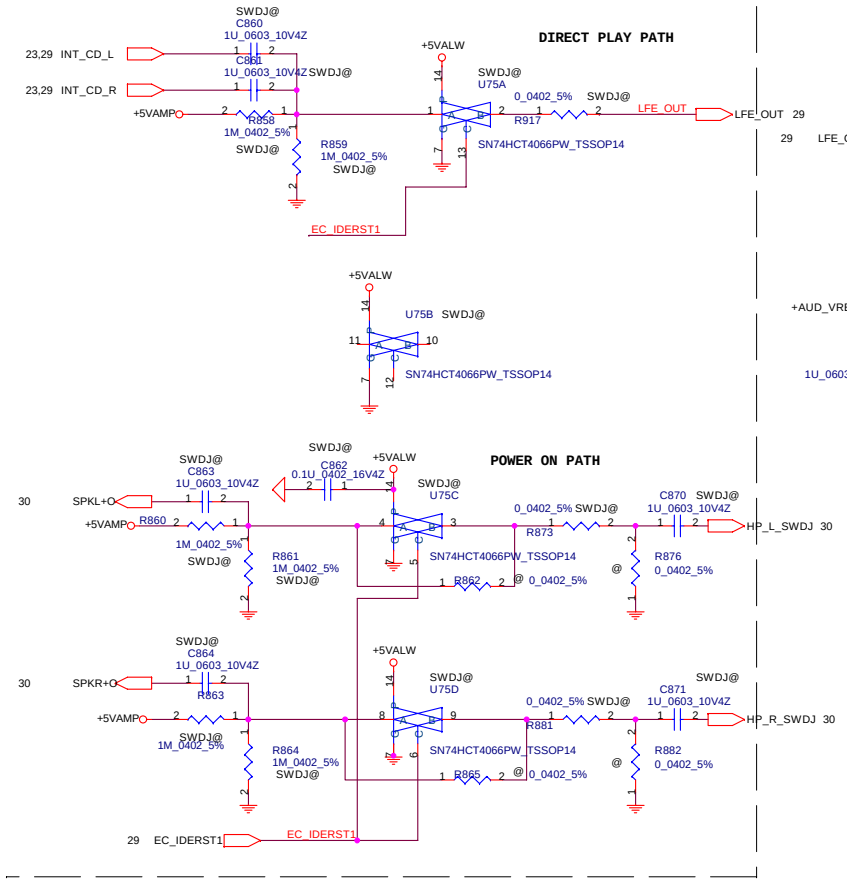


# SUBWOOFER (Reserved for C38)

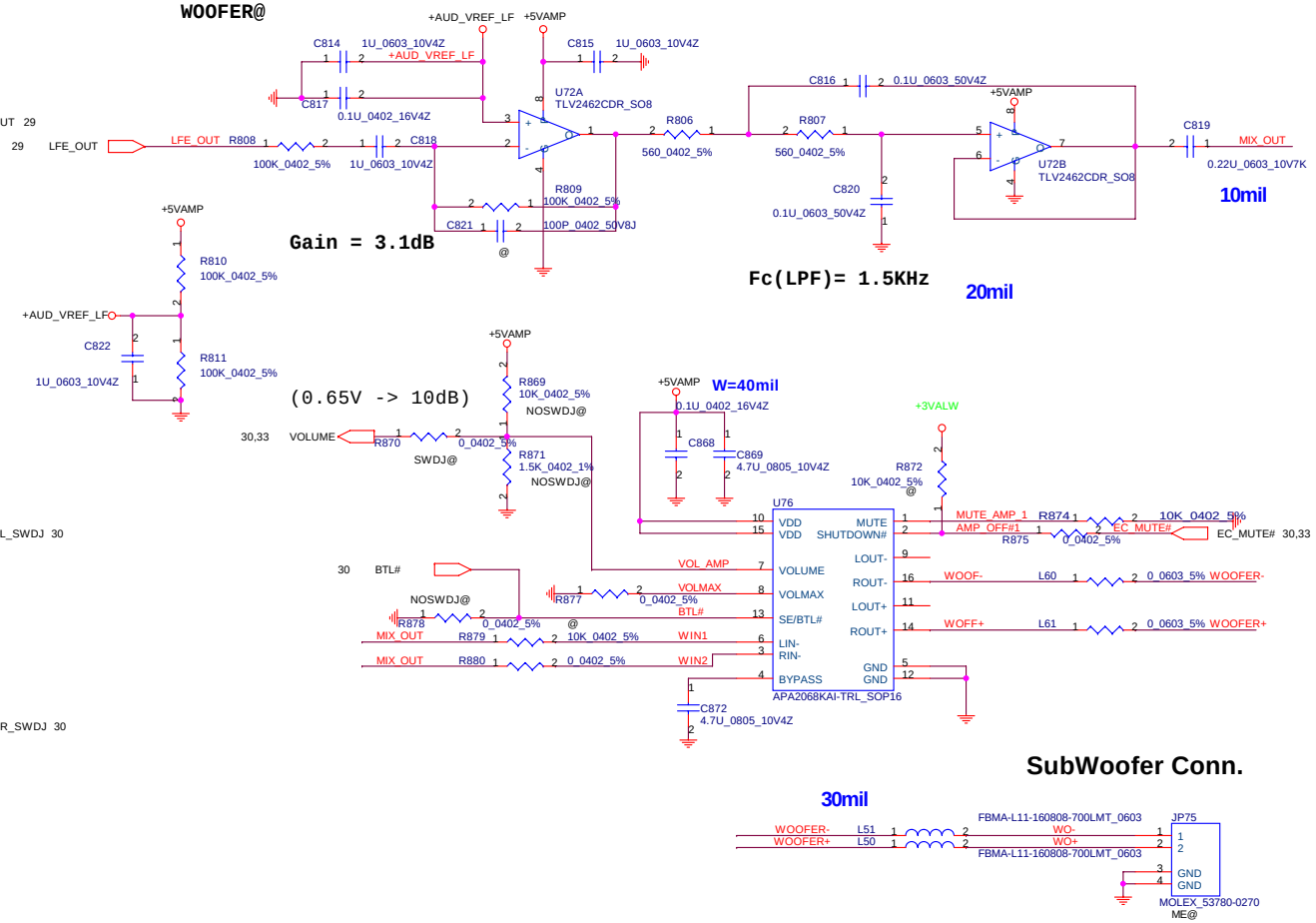


# USB Port

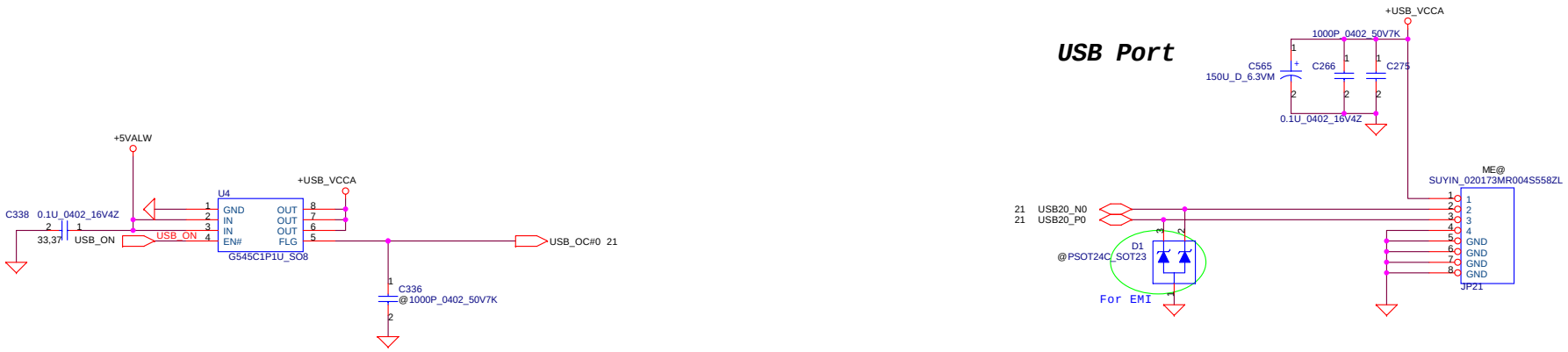


| Security Classification | Compal Secret Data | | |
|---|---|---|---|
| Issued Date | 2006/08/04 | Deciphered Date | 2006/10/06 |

THIS SHEET OF ENGINEERING DRAWING IS THE PROPRIETARY PROPERTY OF COMPAL ELECTRONICS, INC. AND CONTAINS CONFIDENTIAL AND TRADE SECRET INFORMATION. THIS SHEET MAY NOT BE TRANSFERED FROM THE CUSTODY OF THE COMPETENT DIVISION OF R&D DEPARTMENT EXCEPT AS AUTHORIZED BY COMPAL ELECTRONICS, INC. NEITHER THIS SHEET NOR THE INFORMATION IT CONTAINS MAY BE USED BY OR DISCLOSED TO ANY THIRD PARTY WITHOUT PRIOR WRITTEN CONSENT OF COMPAL ELECTRONICS, INC.

**Compal Electronics, Inc.**

Title: **Bluetooth & USB CONN.**

Size: Custom | Document Number: IGT30 LA-3571P | Rev: 0.1

Date: Tuesday, December 26, 2006 | Sheet 31 of 47

## INT_KBD CONN.( TYPE "D" KB)

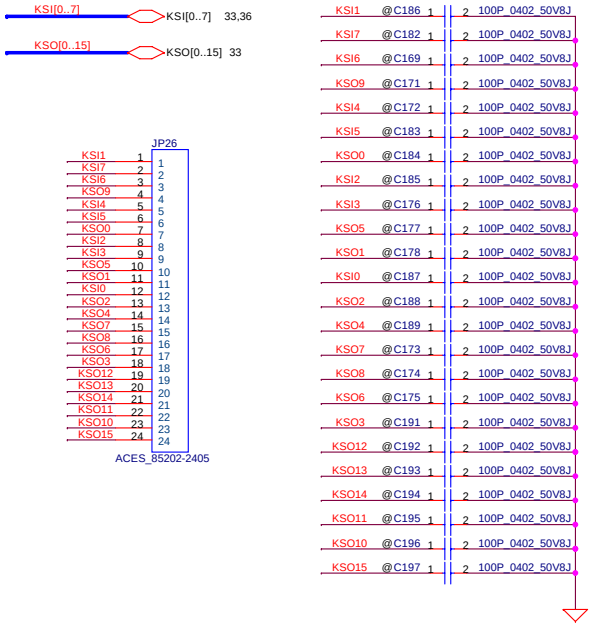


## Power BTN

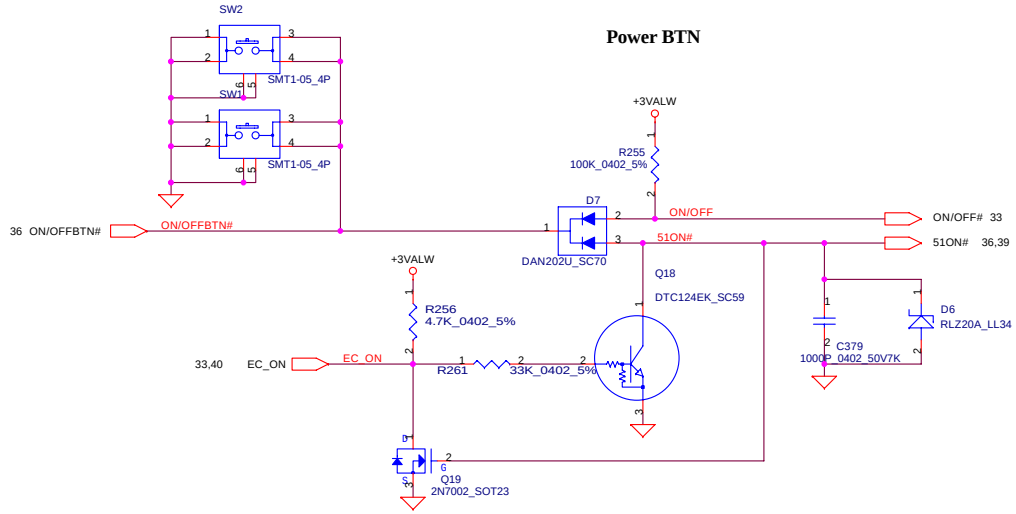


## Kill Switch

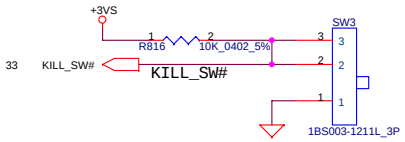


## FOR LPC SIO DEBUG PORT

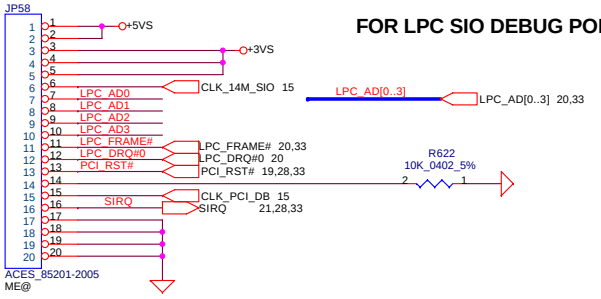


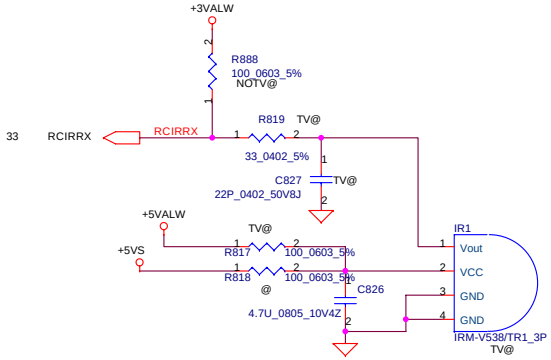


*CIR*

| Security Classification | Compal Secret Data | | |
|---|---|---|---|
| Issued Date | 2006/08/04 | Deciphered Date | 2006/10/06 |

THIS SHEET OF ENGINEERING DRAWING IS THE PROPRIETARY PROPERTY OF COMPAL ELECTRONICS, INC. AND CONTAINS CONFIDENTIAL AND TRADE SECRET INFORMATION. THIS SHEET MAY NOT BE TRANSFERRED FROM THE CUSTODY OF THE COMPETENT DIVISION OF R&D DEPARTMENT EXCEPT AS AUTHORIZED BY COMPAL ELECTRONICS, INC. NEITHER THIS SHEET NOR THE INFORMATION IT CONTAINS MAY BE USED BY OR DISCLOSED TO ANY THIRD PARTY WITHOUT PRIOR WRITTEN CONSENT OF COMPAL ELECTRONICS, INC.

**Compal Electronics, Inc.**

Title: **KBD,ON/OFF,T/P,LED/B,DEBUG**

Size: Custom | Document Number: *IGT30 LA-3571P* | Rev: 0.1

Date: Monday, December 25, 2006 | Sheet 32 of 47

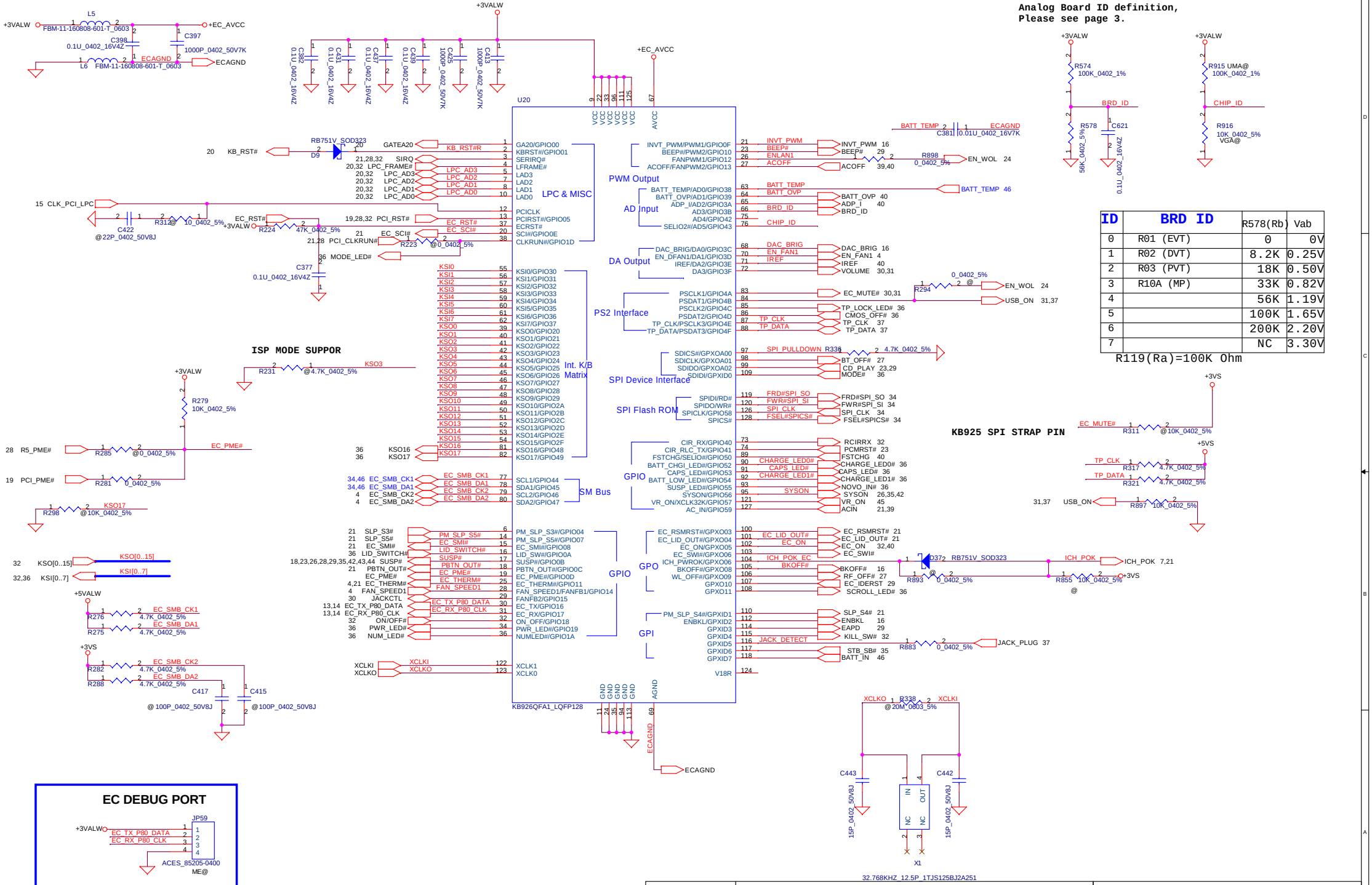


| ID | BRD ID | R578(Rb) | Vab |
|---|---|---|---|
| 0 | R01 (EVT) | 0 | 0V |
| 1 | R02 (DVT) | 8.2K | 0.25V |
| 2 | R03 (PVT) | 18K | 0.50V |
| 3 | R10A (MP) | 33K | 0.82V |
| 4 | | 56K | 1.19V |
| 5 | | 100K | 1.65V |
| 6 | | 200K | 2.20V |
| 7 | | NC | 3.30V |

R119(Ra)=100K Ohm

| Security Classification | Compal Secret Data | | |
|---|---|---|---|
| Issued Date | 2006/08/04 | Deciphered Date | 2006/10/06 |

THIS SHEET OF ENGINEERING DRAWING IS THE PROPRIETARY PROPERTY OF COMPAL ELECTRONICS, INC. AND CONTAINS CONFIDENTIAL AND TRADE SECRET INFORMATION. THIS SHEET MAY NOT BE TRANSFERED FROM THE CUSTODY OF THE COMPETENT DIVISION OF R&D DEPARTMENT EXCEPT AS AUTHORIZED BY COMPAL ELECTRONICS, INC. NEITHER THIS SHEET NOR THE INFORMATION IT CONTAINS MAY BE USED BY OR DISCLOSED TO ANY THIRD PARTY WITHOUT PRIOR WRITTEN CONSENT OF COMPAL ELECTRONICS, INC.

Compal Electronics, Inc.

Title: ENE-KB925

Size: Custom | Document Number: IGT30 LA-3571P | Rev: 0.1

Date: Tuesday, December 26, 2006 | Sheet 33 of 47

# SPI Flash (8Mb*1)

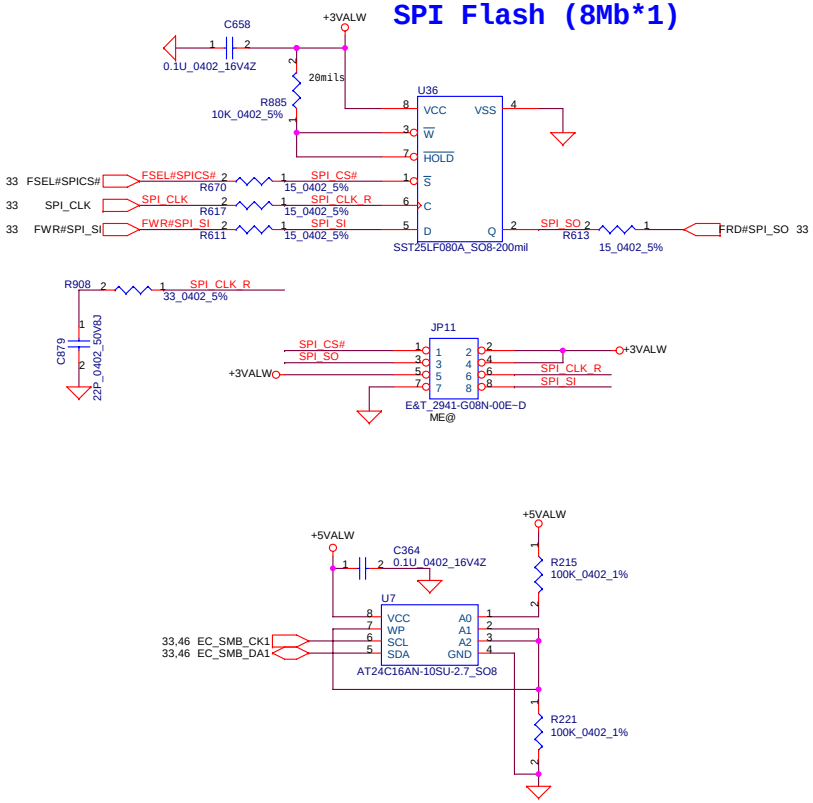


| Security Classification | Compal Secret Data | | |
|---|---|---|---|
| Issued Date | 2006/08/04 | Deciphered Date | 2006/10/06 |

THIS SHEET OF ENGINEERING DRAWING IS THE PROPRIETARY PROPERTY OF COMPAL ELECTRONICS, INC. AND CONTAINS CONFIDENTIAL AND TRADE SECRET INFORMATION. THIS SHEET MAY NOT BE TRANSFERED FROM THE CUSTODY OF THE COMPETENT DIVISION OF R&D DEPARTMENT EXCEPT AS AUTHORIZED BY COMPAL ELECTRONICS, INC. NEITHER THIS SHEET NOR THE INFORMATION IT CONTAINS MAY BE USED BY OR DISCLOSED TO ANY THIRD PARTY WITHOUT PRIOR WRITTEN CONSENT OF COMPAL ELECTRONICS, INC.

**Compal Electronics, Inc.**

Title: **BIOS & EC I/O Port**

Size: Custom | Document Number: *IGT30 LA-3571P* | Rev: 0.1

Date: Monday, December 25, 2006 | Sheet 34 of 47

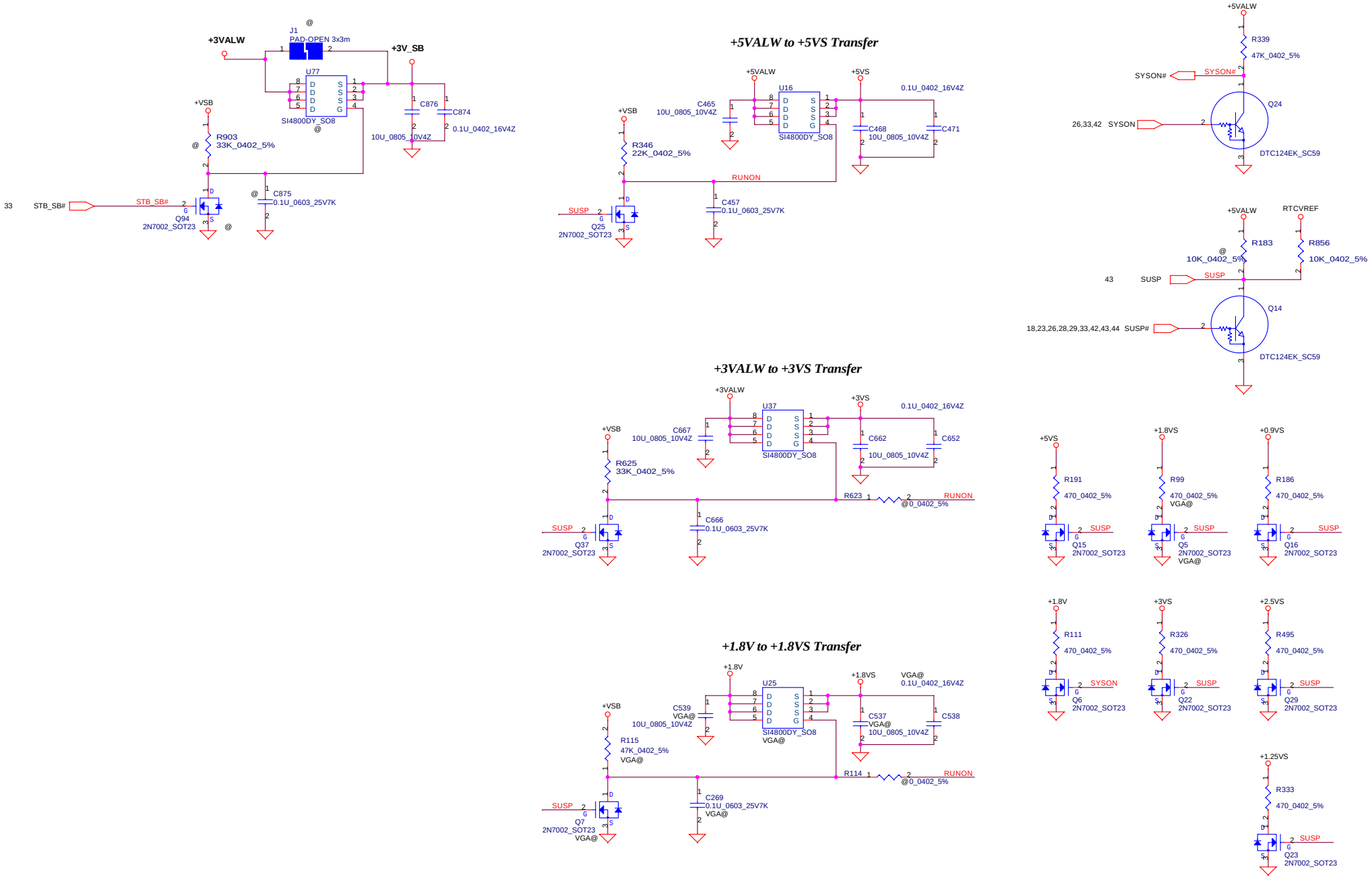


| | | | |
|---|---|---|---|
| Security Classification | Compal Secret Data | | |
| Issued Date | 2006/08/04 | Deciphered Date | 2006/10/06 |

THIS SHEET OF ENGINEERING DRAWING IS THE PROPRIETARY PROPERTY OF COMPAL ELECTRONICS, INC. AND CONTAINS CONFIDENTIAL AND TRADE SECRET INFORMATION. THIS SHEET MAY NOT BE TRANSFERED FROM THE CUSTODY OF THE COMPETENT DIVISION OF R&D DEPARTMENT EXCEPT AS AUTHORIZED BY COMPAL ELECTRONICS, INC. NEITHER THIS SHEET NOR THE INFORMATION IT CONTAINS MAY BE USED BY OR DISCLOSED TO ANY THIRD PARTY WITHOUT PRIOR WRITTEN CONSENT OF COMPAL ELECTRONICS, INC.

**Compal Electronics, Inc.**

Title: **DC/DC Circuit**

Size: Custom | Document Number: IGT30 LA-3571P | Rev: 0.1

Date: Monday, December 25, 2006 | Sheet 35 of 47

# LED Indicator ON M/B

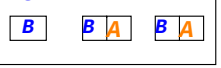


## Wireless / Bluetooth LED

( 1 )

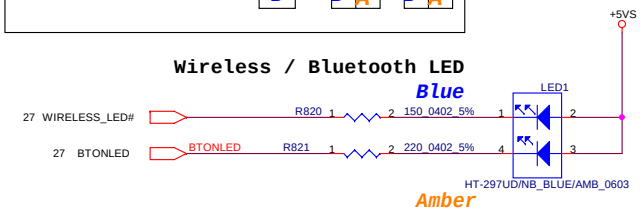


| STATUS | |
|---|---|
| AC | BLUE |
| Chargin | Blinking Blue |
| Low BATT | Amber |

( 2 )

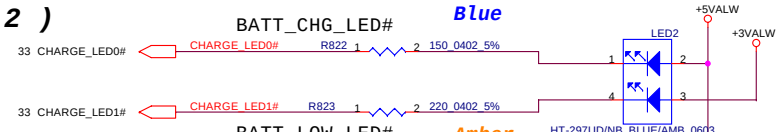


( 3 )

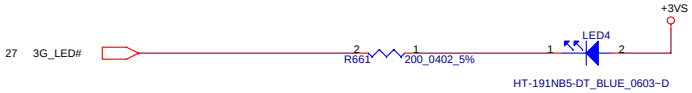


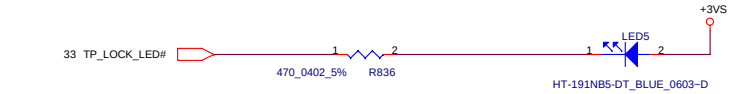


| STATUS | |
|---|---|
| AC | BLUE |
| Chargin | Blinking Blue |
| Low BATT | Amber |

## Dial Wheel

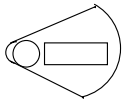

Function

| KEY Matrix | KO16 | KO17 |
|---|---|---|
| KSI0 | DW-UP | DW-DOWN |
| KSI1 | DW-ENTER | MUTE |

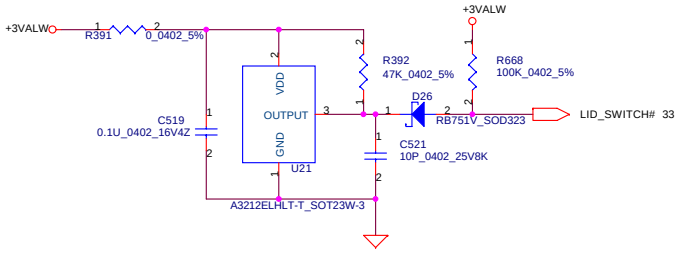


## CMOS Camera Conn

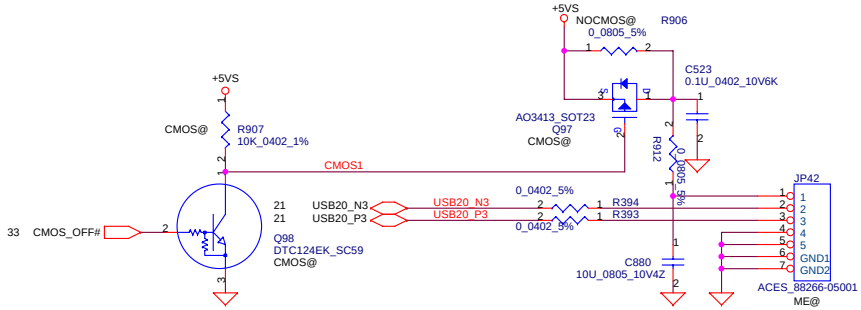


## Left Switch BD(AUDIO DJ)

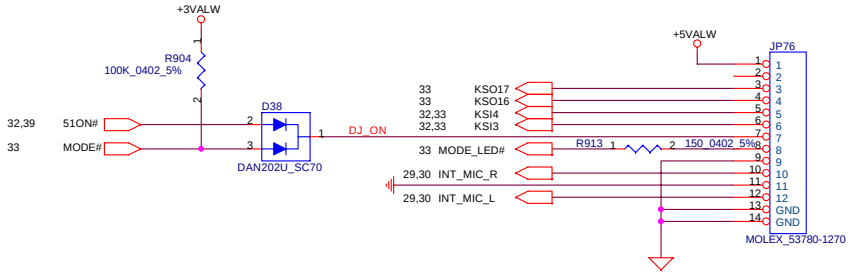


## Right Switch BD

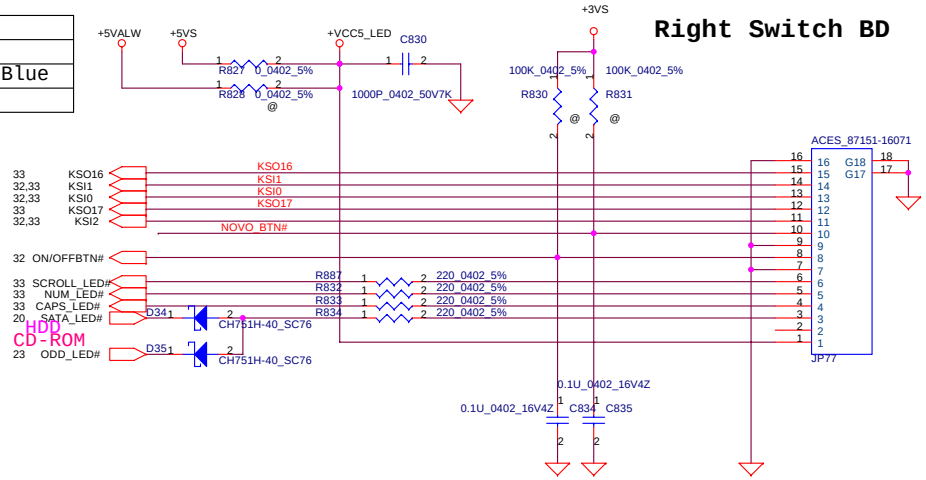


NOVA_BTN#

## NOVO BTN

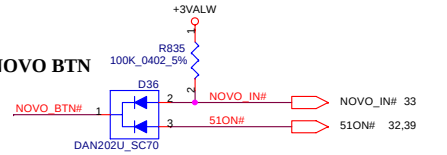


C839, C841, C842 For EMI Solution

| Security Classification | Compal Secret Data | | |
|---|---|---|---|
| Issued Date | 2006/08/04 | Deciphered Date | 2006/10/06 |

THIS SHEET OF ENGINEERING DRAWING IS THE PROPRIETARY PROPERTY OF COMPAL ELECTRONICS, INC. AND CONTAINS CONFIDENTIAL AND TRADE SECRET INFORMATION. THIS SHEET MAY NOT BE TRANSFERED FROM THE CUSTODY OF THE COMPETENT DIVISION OF R&D DEPARTMENT EXCEPT AS AUTHORIZED BY COMPAL ELECTRONICS, INC. NEITHER THIS SHEET NOR THE INFORMATION IT CONTAINS MAY BE USED BY OR DISCLOSED TO ANY THIRD PARTY WITHOUT PRIOR WRITTEN CONSENT OF COMPAL ELECTRONICS, INC.

Compal Electronics, Inc.

Title: INDICATE LED

Size: Custom | Document Number: IGT30 LA-3571P | Rev: 0.1

Date: Monday, December 25, 2006 | Sheet 36 of 47

# 4 in 1 Card Reader

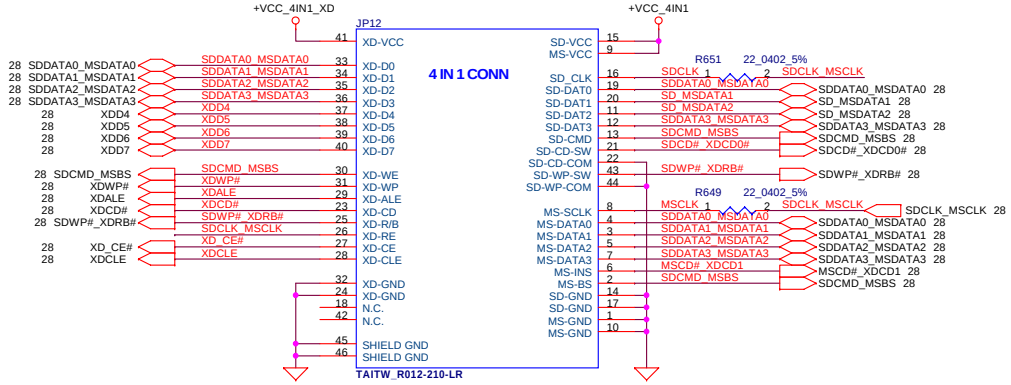


# UMA LCD/PANEL Conn.

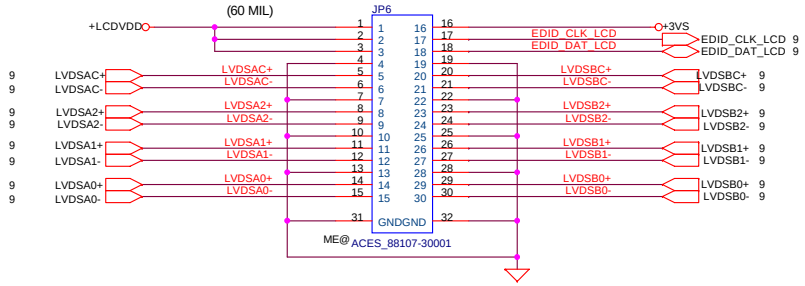


# Audio Jack/USB Conn.

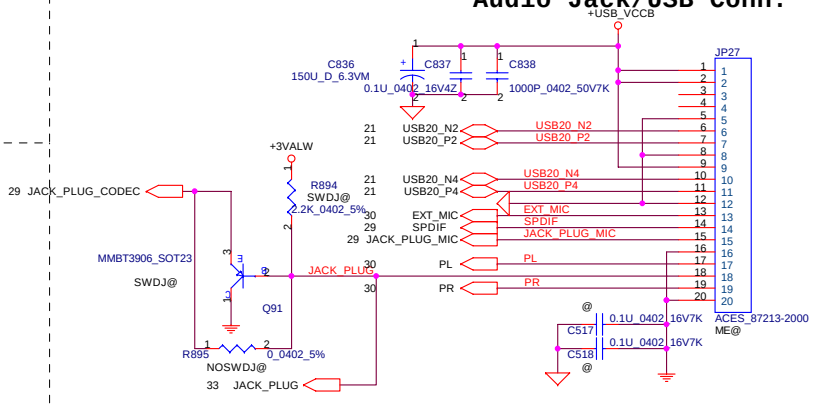


# T/P Board

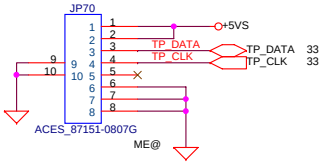


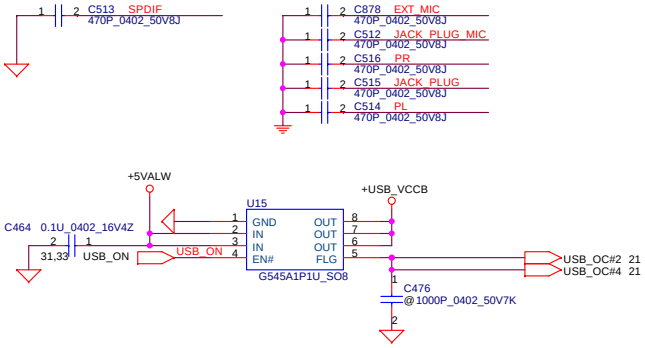


| Security Classification | Compal Secret Data | | |
|---|---|---|---|
| Issued Date | 2006/08/04 | Deciphered Date | 2006/10/06 |

THIS SHEET OF ENGINEERING DRAWING IS THE PROPRIETARY PROPERTY OF COMPAL ELECTRONICS, INC. AND CONTAINS CONFIDENTIAL AND TRADE SECRET INFORMATION. THIS SHEET MAY NOT BE TRANSFERED FROM THE CUSTODY OF THE COMPETENT DIVISION OF R&D DEPARTMENT EXCEPT AS AUTHORIZED BY COMPAL ELECTRONICS, INC. NEITHER THIS SHEET NOR THE INFORMATION IT CONTAINS MAY BE USED BY OR DISCLOSED TO ANY THIRD PARTY WITHOUT PRIOR WRITTEN CONSENT OF COMPAL ELECTRONICS, INC.

Compal Electronics, Inc.

Title: INDICATE LED

Size: Custom | Document Number: IGT30 LA-3571P | Rev: 0.1

Date: Monday, December 25, 2006 | Sheet 37 of 47

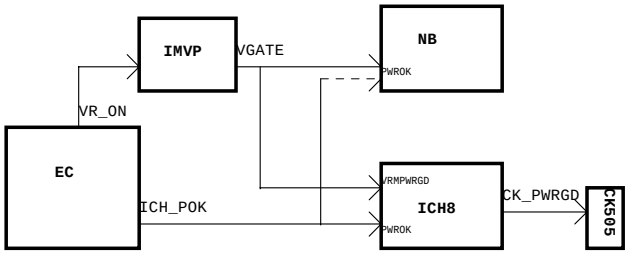


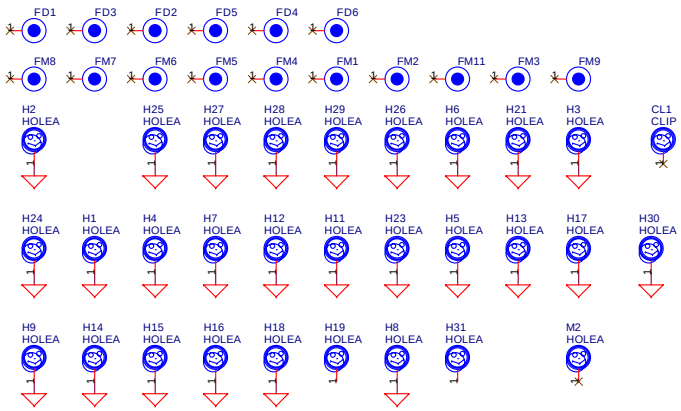


| | | | |
|---|---|---|---|
| Security Classification | Compal Secret Data | | |
| Issued Date | 2006/08/04 | Deciphered Date | 2006/10/06 |

THIS SHEET OF ENGINEERING DRAWING IS THE PROPRIETARY PROPERTY OF COMPAL ELECTRONICS, INC. AND CONTAINS CONFIDENTIAL AND TRADE SECRET INFORMATION. THIS SHEET MAY NOT BE TRANSFERED FROM THE CUSTODY OF THE COMPETENT DIVISION OF R&D DEPARTMENT EXCEPT AS AUTHORIZED BY COMPAL ELECTRONICS, INC. NEITHER THIS SHEET NOR THE INFORMATION IT CONTAINS MAY BE USED BY OR DISCLOSED TO ANY THIRD PARTY WITHOUT PRIOR WRITTEN CONSENT OF COMPAL ELECTRONICS, INC.

**Compal Electronics, Inc.**

Title: **Hole**

Size: Custom | Document Number: *IGT30 LA-3571P* | Rev: 0.1

Date: Monday, December 25, 2006 | Sheet 38 of 47

**ACIN**

| Precharge detector | Min. | typ. | Max. |
|---|---|---|---|
| H-->L | 13.843V | 14.247V | 14.636V |
| L-->H | 14.936V | 15.381V | 15.814V |

**BATT ONLY**

| Precharge detector | Min. | typ. | Max. |
|---|---|---|---|
| H-->L | 6.138V | 6.214V | 6.359V |
| L-->H | 7.196V | 7.349V | 7.505V |

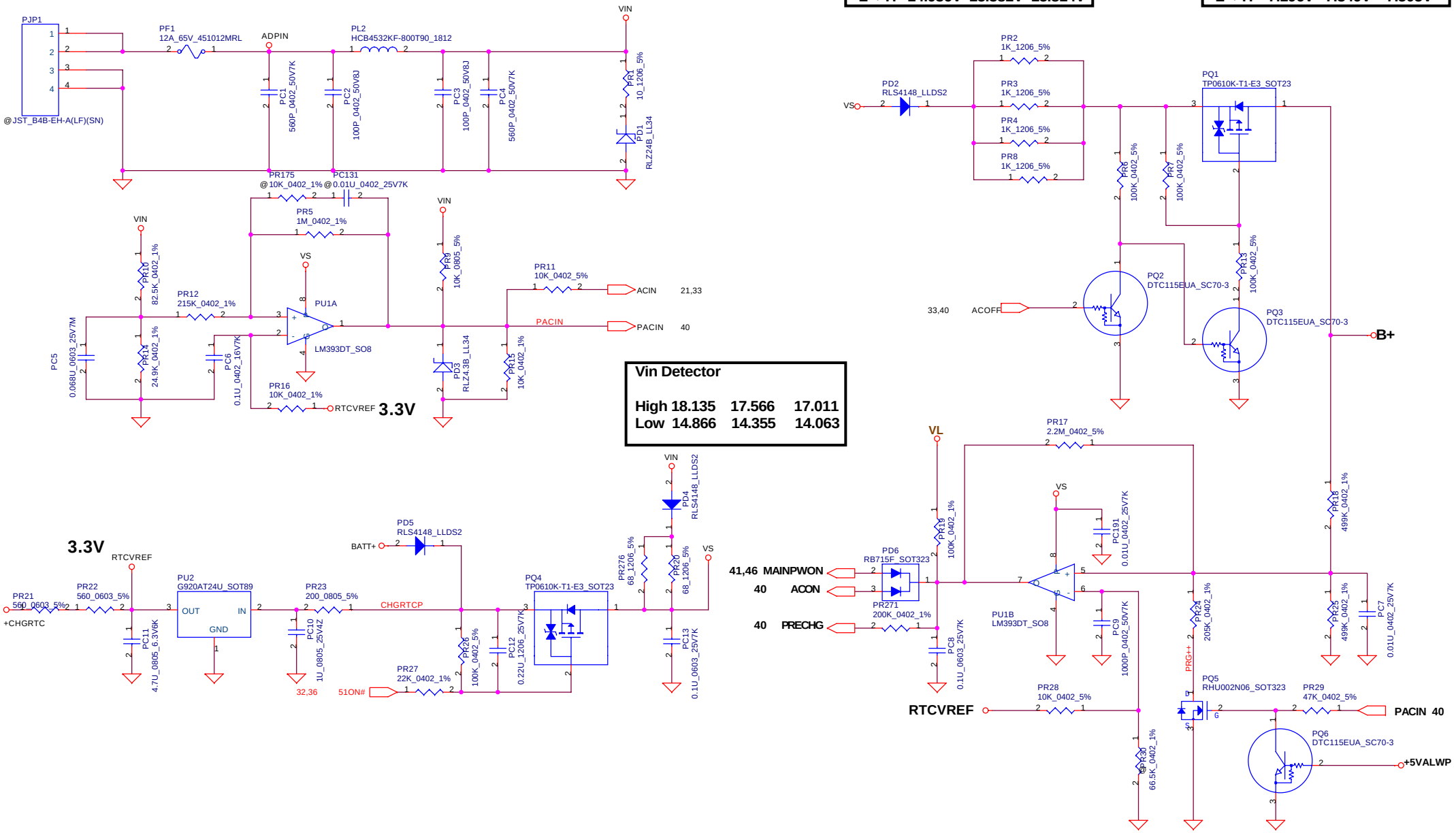


**Vin Detector**

| | | | |
|---|---|---|---|
| High | 18.135 | 17.566 | 17.011 |
| Low | 14.866 | 14.355 | 14.063 |

| Security Classification | Compal Secret Data | | |
|---|---|---|---|
| Issued Date | 2006/08/04 | Deciphered Date | 2006/10/06 |

THIS SHEET OF ENGINEERING DRAWING IS THE PROPRIETARY PROPERTY OF COMPAL ELECTRONICS, INC. AND CONTAINS CONFIDENTIAL AND TRADE SECRET INFORMATION. THIS SHEET MAY NOT BE TRANSFERED FROM THE CUSTODY OF THE COMPETENT DIVISION OF R&D DEPARTMENT EXCEPT AS AUTHORIZED BY COMPAL ELECTRONICS, INC. NEITHER THIS SHEET NOR THE INFORMATION IT CONTAINS MAY BE USED BY OR DISCLOSED TO ANY THIRD PARTY WITHOUT PRIOR WRITTEN CONSENT OF COMPAL ELECTRONICS, INC.

**Compal Electronics, Inc.**

Title: **DCIN/DETECTOR**

Size: B | Document Number | Rev: 0.1

Date: Monday, December 25, 2006 | Sheet 39 of 47

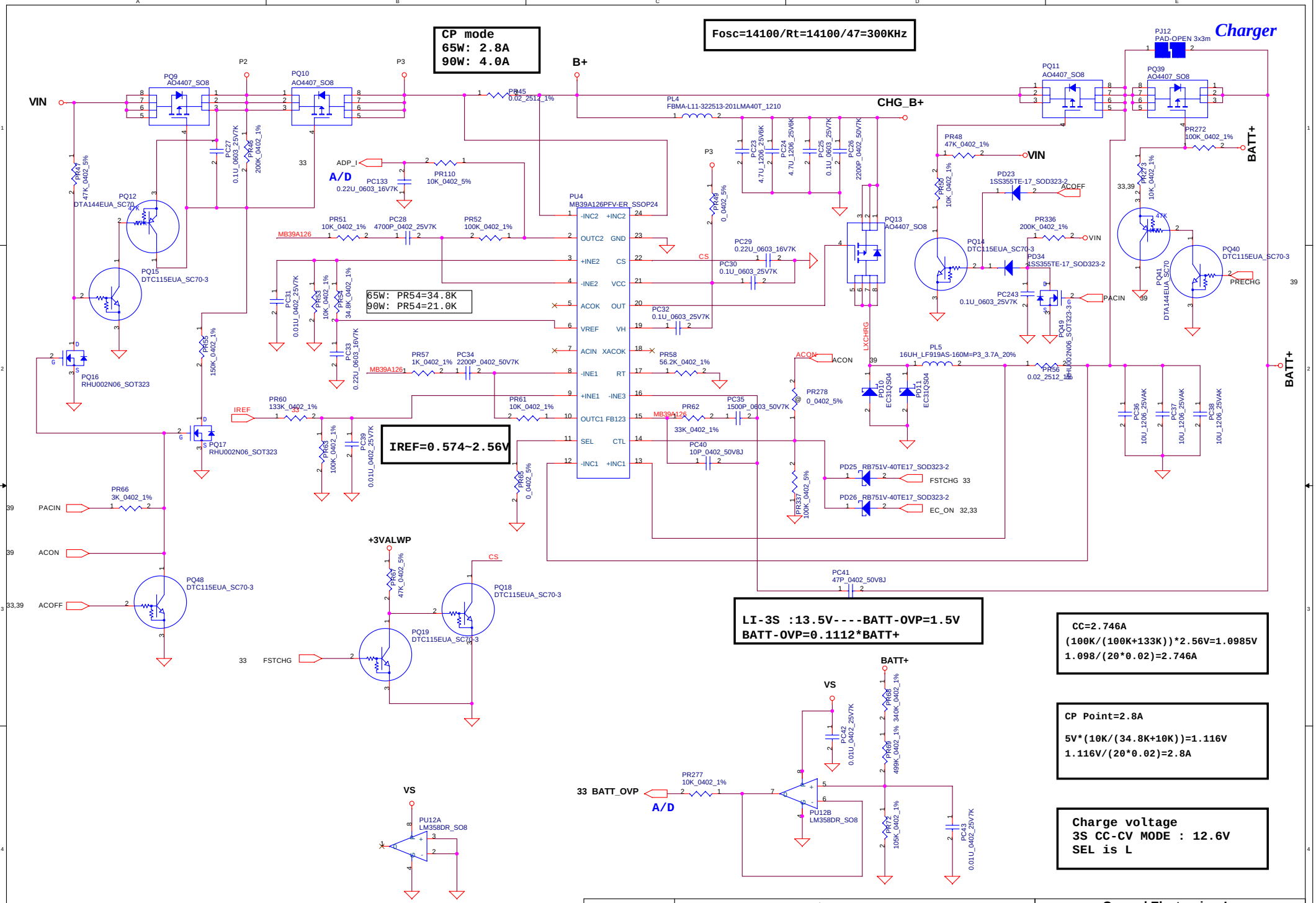


| Security Classification | Compal Secret Data | | |
|---|---|---|---|
| Issued Date | 2006/08/04 | Deciphered Date | 2006/10/06 |

THIS SHEET OF ENGINEERING DRAWING IS THE PROPRIETARY PROPERTY OF COMPAL ELECTRONICS, INC. AND CONTAINS CONFIDENTIAL AND TRADE SECRET INFORMATION. THIS SHEET MAY NOT BE TRANSFERED FROM THE CUSTODY OF THE COMPETENT DIVISION OF R&D DEPARTMENT EXCEPT AS AUTHORIZED BY COMPAL ELECTRONICS, INC. NEITHER THIS SHEET NOR THE INFORMATION IT CONTAINS MAY BE USED BY OR DISCLOSED TO ANY THIRD PARTY WITHOUT PRIOR WRITTEN CONSENT OF COMPAL ELECTRONICS, INC.

**Compal Electronics, Inc.**

Title: **CHARGER**

Size: B | Document Number | Rev: 0.1

Date: Monday, December 25, 2006 | Sheet 40 of 47

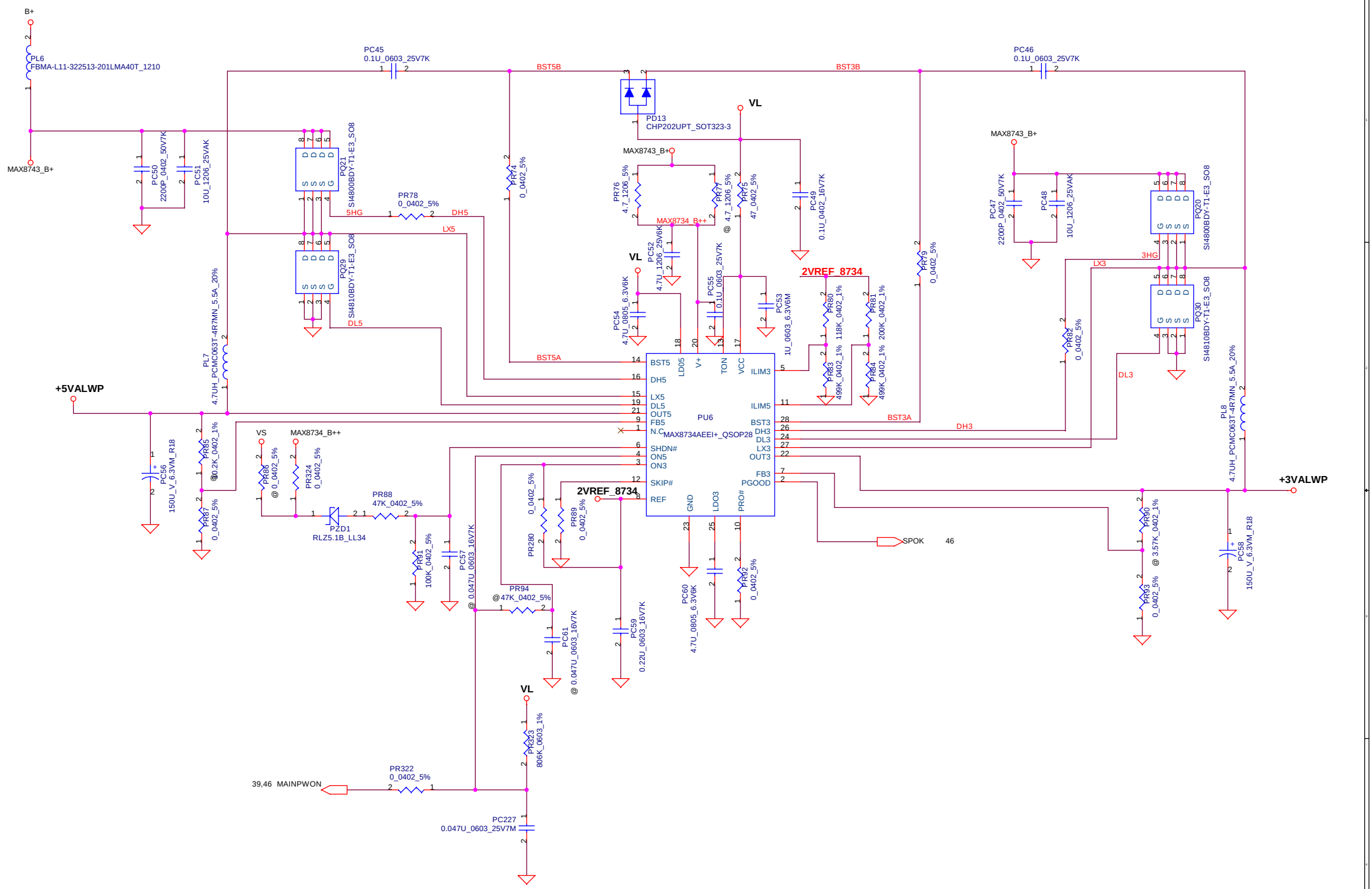


| Security Classification | Compal Secret Data | | |
|---|---|---|---|
| Issued Date | 2006/08/04 | Deciphered Date | 2006/10/06 |

THIS SHEET OF ENGINEERING DRAWING IS THE PROPRIETARY PROPERTY OF COMPAL ELECTRONICS, INC. AND CONTAINS CONFIDENTIAL AND TRADE SECRET INFORMATION. THIS SHEET MAY NOT BE TRANSFERED FROM THE CUSTODY OF THE COMPETENT DIVISION OF R&D DEPARTMENT EXCEPT AS AUTHORIZED BY COMPAL ELECTRONICS, INC. NEITHER THIS SHEET NOR THE INFORMATION IT CONTAINS MAY BE USED BY OR DISCLOSED TO ANY THIRD PARTY WITHOUT PRIOR WRITTEN CONSENT OF COMPAL ELECTRONICS, INC.

**Compal Electronics, Inc.**

Title: **+5VALWP/+3VALWP**

Size: Custom | Document Number | Rev: 0.1

Date: Monday, December 25, 2006 | Sheet 41 of 47

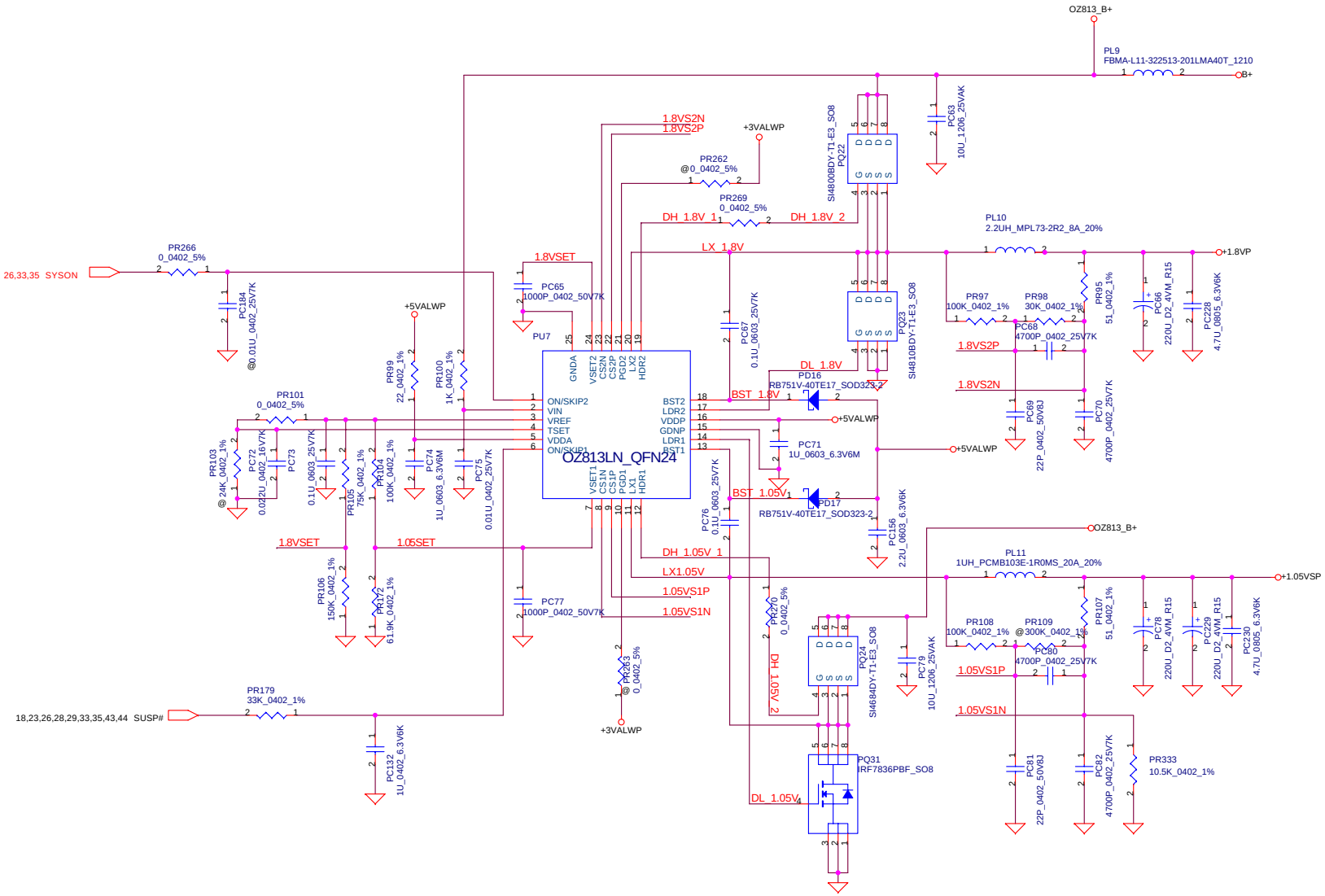


| Security Classification | Compal Secret Data | | |
|---|---|---|---|
| Issued Date | 2006/08/04 | Deciphered Date | 2006/10/06 |

THIS SHEET OF ENGINEERING DRAWING IS THE PROPRIETARY PROPERTY OF COMPAL ELECTRONICS, INC. AND CONTAINS CONFIDENTIAL AND TRADE SECRET INFORMATION. THIS SHEET MAY NOT BE TRANSFERED FROM THE CUSTODY OF THE COMPETENT DIVISION OF R&D DEPARTMENT EXCEPT AS AUTHORIZED BY COMPAL ELECTRONICS, INC. NEITHER THIS SHEET NOR THE INFORMATION IT CONTAINS MAY BE USED BY OR DISCLOSED TO ANY THIRD PARTY WITHOUT PRIOR WRITTEN CONSENT OF COMPAL ELECTRONICS, INC.

**Compal Electronics, Inc.**

Title: **1.05VSP/1.8VP**

Size: Custom | Document Number | Rev: 0.1

Date: Monday, December 25, 2006 | Sheet 42 of 47

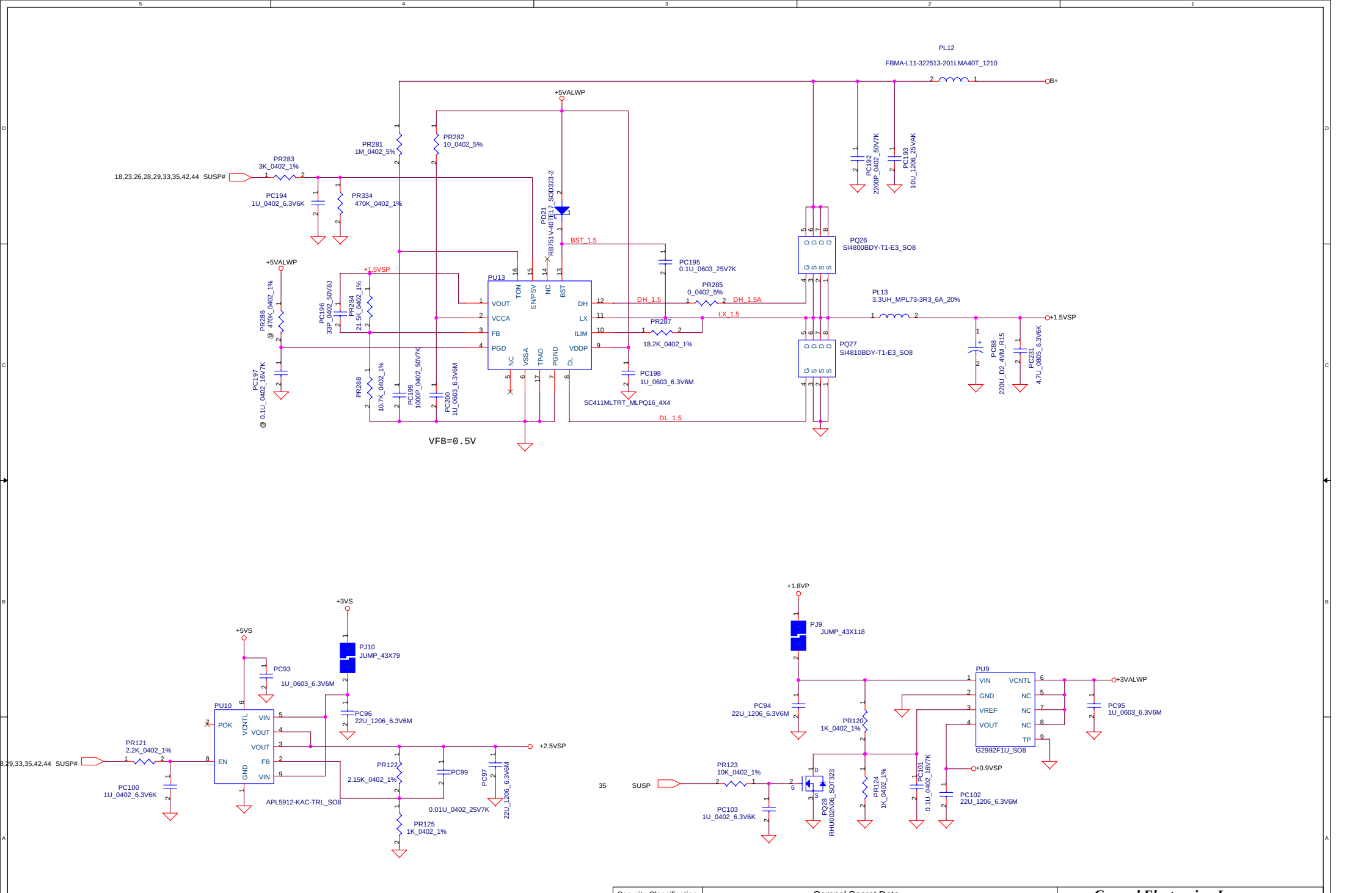


| Security Classification | Compal Secret Data | | |
|---|---|---|---|
| Issued Date | 2006/08/04 | Deciphered Date | 2006/10/06 |

THIS SHEET OF ENGINEERING DRAWING IS THE PROPRIETARY PROPERTY OF COMPAL ELECTRONICS, INC. AND CONTAINS CONFIDENTIAL AND TRADE SECRET INFORMATION. THIS SHEET MAY NOT BE TRANSFERRED FROM THE CUSTODY OF THE COMPETENT DIVISION OF R&D DEPARTMENT EXCEPT AS AUTHORIZED BY COMPAL ELECTRONICS, INC. NEITHER THIS SHEET NOR THE INFORMATION IT CONTAINS MAY BE USED BY OR DISCLOSED TO ANY THIRD PARTY WITHOUT PRIOR WRITTEN CONSENT OF COMPAL ELECTRONICS, INC.

**Compal Electronics, Inc.**

Title: **+1.5VSP/+0.9VSP/+2.5VSP**

Size: Custom | Document Number | Rev: 0.1

Date: Monday, December 25, 2006 | Sheet 43 of 47

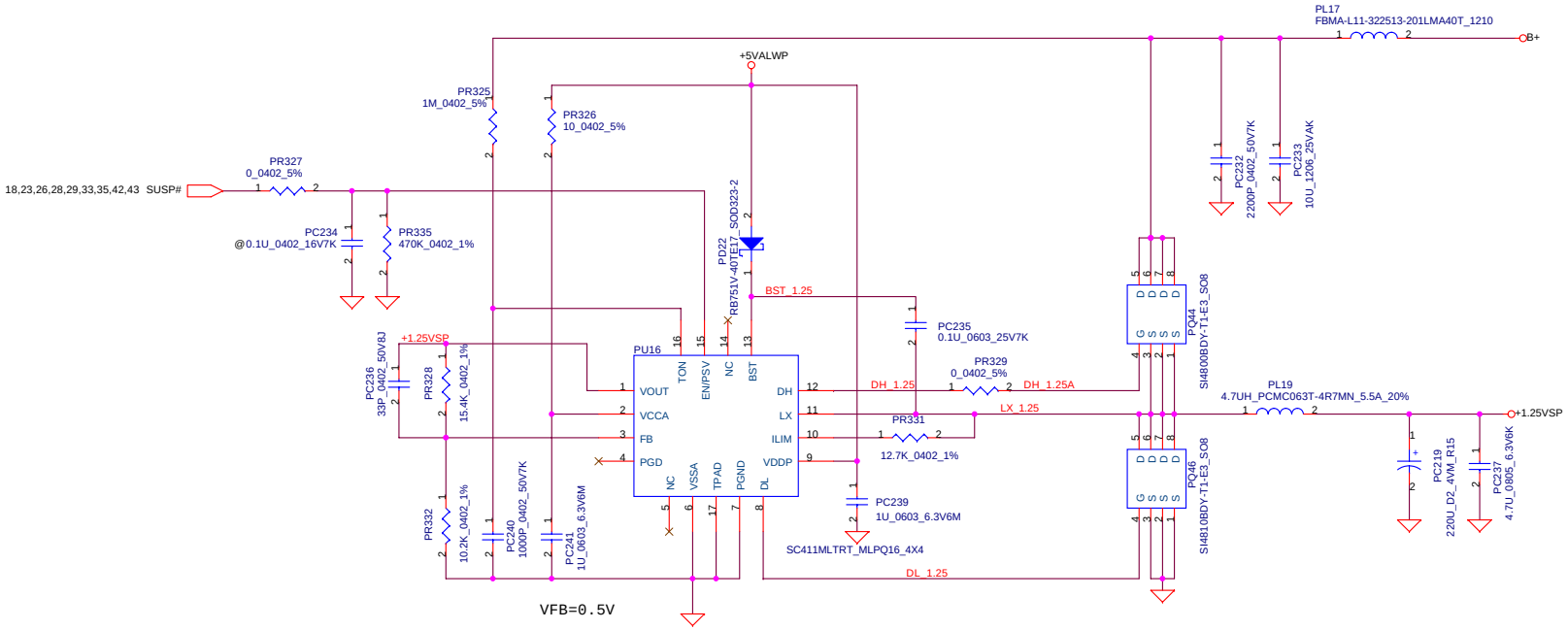


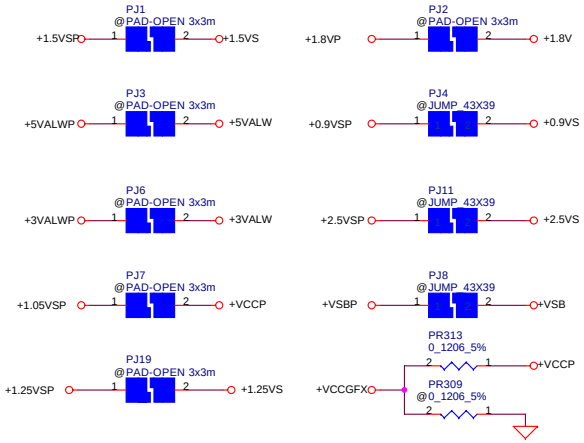


| | |
|---|---|
| UMA | PR313 |
| Discrete | PR309 |

| Security Classification | Compal Secret Data | | |
|---|---|---|---|
| Issued Date | 2006/08/04 | Deciphered Date | 2006/10/06 |

THIS SHEET OF ENGINEERING DRAWING IS THE PROPRIETARY PROPERTY OF COMPAL ELECTRONICS, INC. AND CONTAINS CONFIDENTIAL AND TRADE SECRET INFORMATION. THIS SHEET MAY NOT BE TRANSFERED FROM THE CUSTODY OF THE COMPETENT DIVISION OF R&D DEPARTMENT EXCEPT AS AUTHORIZED BY COMPAL ELECTRONICS, INC. NEITHER THIS SHEET NOR THE INFORMATION IT CONTAINS MAY BE USED BY OR DISCLOSED TO ANY THIRD PARTY WITHOUT PRIOR WRITTEN CONSENT OF COMPAL ELECTRONICS, INC.

**Compal Electronics, Inc.**

Title: **1.25VSP**

Size: Custom | Document Number | Rev: 0.1

Date: Monday, December 25, 2006 | Sheet 44 of 47

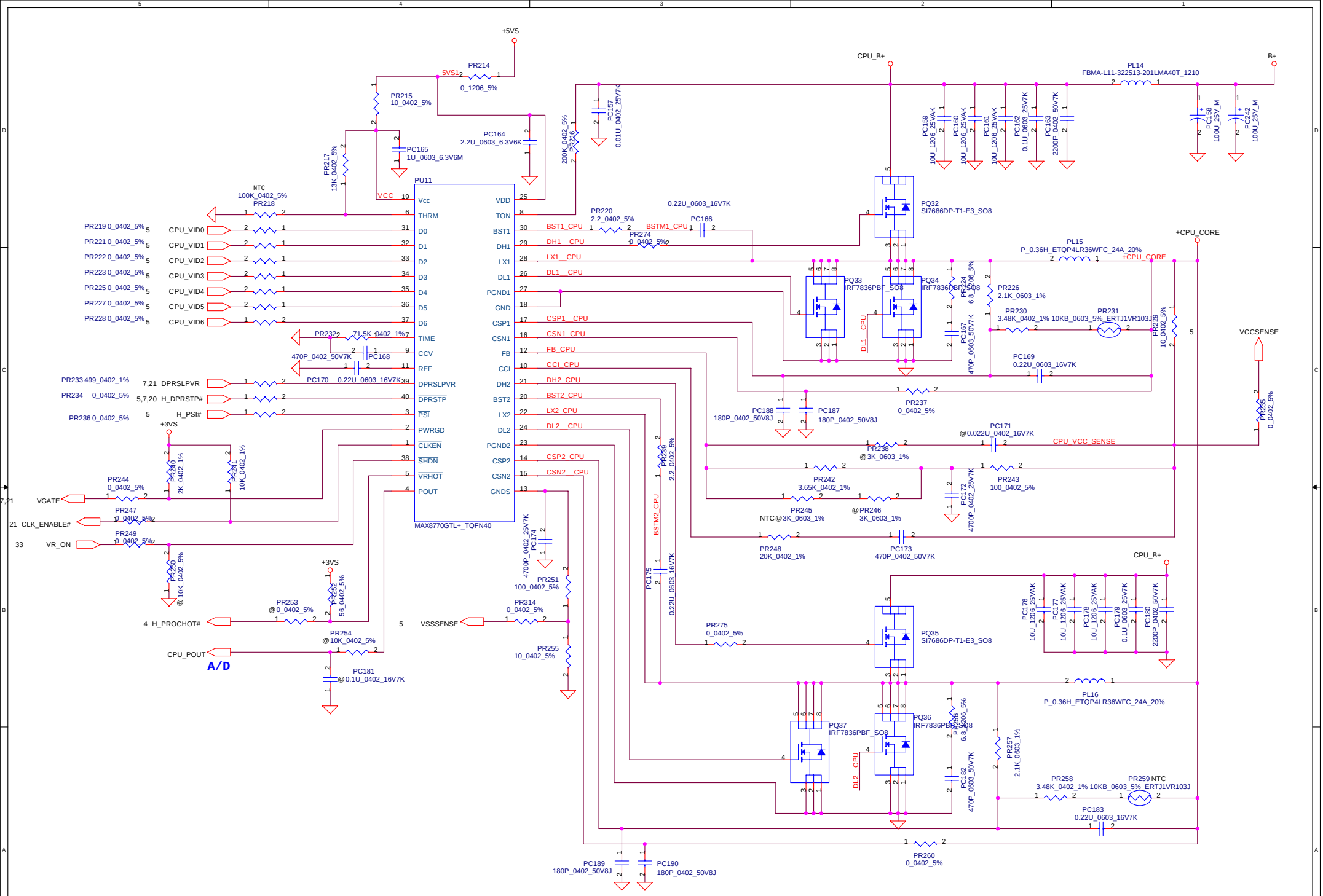


| Security Classification | Compal Secret Data | | |
|---|---|---|---|
| Issued Date | 2006/08/04 | Deciphered Date | 2006/10/06 |

THIS SHEET OF ENGINEERING DRAWING IS THE PROPRIETARY PROPERTY OF COMPAL ELECTRONICS, INC. AND CONTAINS CONFIDENTIAL AND TRADE SECRET INFORMATION. THIS SHEET MAY NOT BE TRANSFERED FROM THE CUSTODY OF THE COMPETENT DIVISION OF R&D DEPARTMENT EXCEPT AS AUTHORIZED BY COMPAL ELECTRONICS, INC. NEITHER THIS SHEET NOR THE INFORMATION IT CONTAINS MAY BE USED BY OR DISCLOSED TO ANY THIRD PARTY WITHOUT PRIOR WRITTEN CONSENT OF COMPAL ELECTRONICS, INC.

**Compal Electronics, Inc.**

Title: **+CPU_CORE**

| Size | Document Number | Rev |
|---|---|---|
| Custom | | 0.1 |

Date: Monday, December 25, 2006 | Sheet 45 of 47

**PH1 under CPU botten side :**
CPU thermal protection at 84 degree C
Recovery at 45 degree C

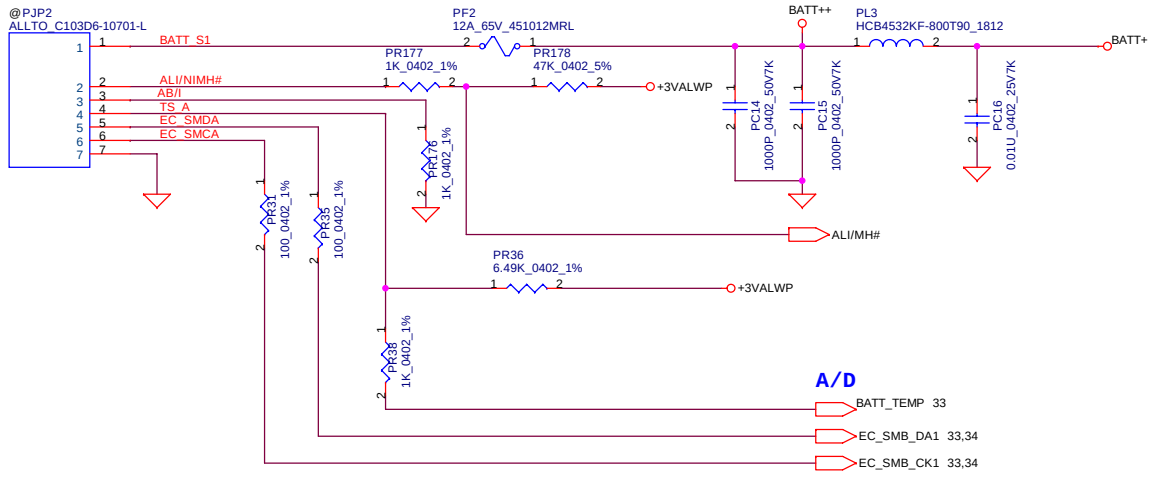


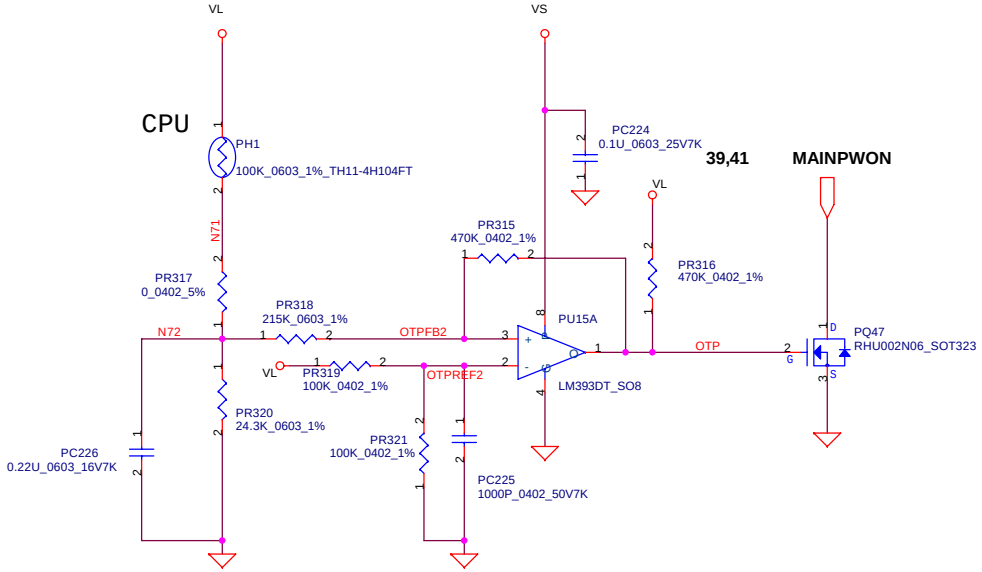


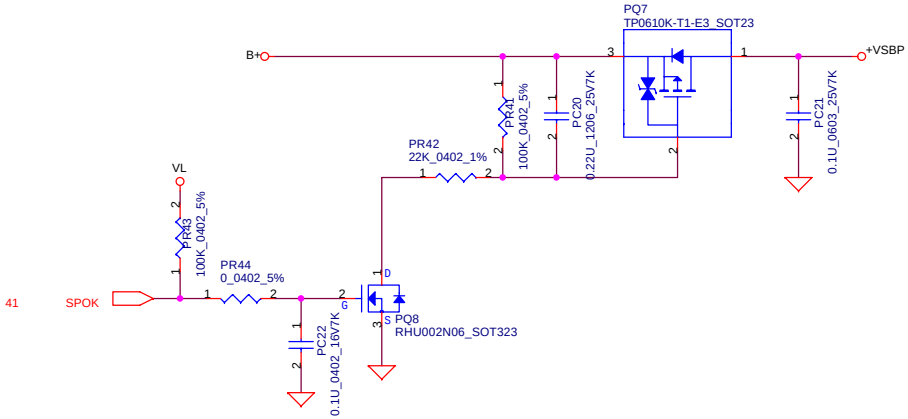


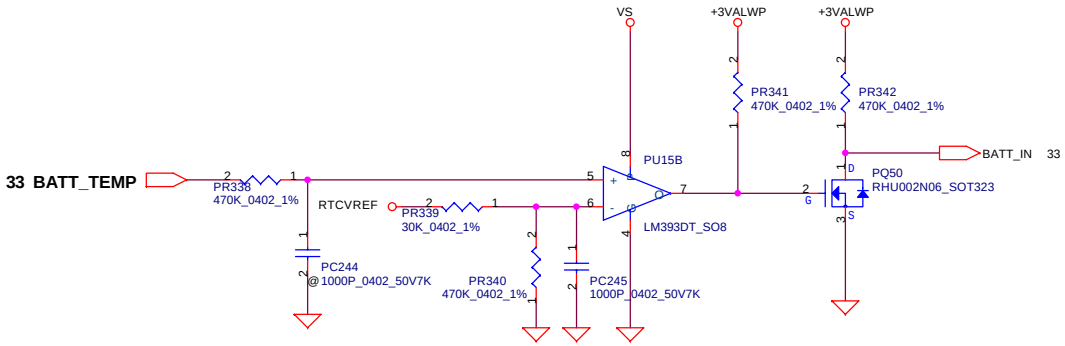


| Security Classification | Compal Secret Data | | |
|---|---|---|---|
| Issued Date | 2006/08/04 | Deciphered Date | 2006/10/06 |

THIS SHEET OF ENGINEERING DRAWING IS THE PROPRIETARY PROPERTY OF COMPAL ELECTRONICS, INC. AND CONTAINS CONFIDENTIAL AND TRADE SECRET INFORMATION. THIS SHEET MAY NOT BE TRANSFERED FROM THE CUSTODY OF THE COMPETENT DIVISION OF R&D DEPARTMENT EXCEPT AS AUTHORIZED BY COMPAL ELECTRONICS, INC. NEITHER THIS SHEET NOR THE INFORMATION IT CONTAINS MAY BE USED BY OR DISCLOSED TO ANY THIRD PARTY WITHOUT PRIOR WRITTEN CONSENT OF COMPAL ELECTRONICS, INC.

**Compal Electronics, Inc.**

Title: **BATTERY CONN. / OTP**

Size: B | Document Number | Rev: 0.1

Date: Monday, December 25, 2006 | Sheet 46 of 47

# Version change list (P.I.R. List)



| Item | Fixed Issue | Rev. | PG# | Modify List | B.Ver# | Phase |
|---|---|---|---|---|---|---|
| 1 | Improve CPU input capcaity noise issue | | 45 | Advence CPU input capacity PC242 | | |
| 2 | Decrease S5 power consumption. | | 40 | Delete PR59、PR64.<br>ADD PD19、PD20. | | |
| 3 | Protect battery discharge mos damage when plug 15V adapter. | | 45 | Delete PD12.<br>ADD PD21、PD22、PR250、PQ50、PC198.. | | |
| 4 | Improve 1.8v transient response. | | 42 | Change PL10 to 2.2u, PR98 to 30k_0402_1% | | |
| 5 | Adjust power sequence. | | 42<br>43 | For adjust +1.8VP, Change PR179 to 33k_0402_1% and add PC132 1u_0402_6.3v<br>For adjust +1.5VSP, Change PR283 to 3k_0402_1% and add PC194 1u_0402_6.3v<br>For adjust +2.5VSP, Change PR121 to 2.2k_0402_1% and add PC100 1u_0402_6.3v<br>For adjust +0.9VSP, Change PR123 to 10k_0402_1% and add PC103 1u_0402_6.3v | | |
| 6 | For improve EPA | | 46 | Add PR338, PR339, PR340, PR341, PR342, PC244, PC245, PQ50 | | |

THIS SHEET OF ENGINEERING DRAWING IS THE PROPRIETARY PROPERTY OF COMPAL ELECTRONICS, INC. AND CONTAINS CONFIDENTIAL AND TRADE SECRET INFORMATION. THIS SHEET MAY NOT BE TRANSFERED FROM THE CUSTODY OF THE COMPETENT DIVISION OF R&D DEPARTMENT EXCEPT AS AUTHORIZED BY COMPAL ELECTRONICS, INC. NEITHER THIS SHEET NOR THE INFORMATION IT CONTAINS MAY BE USED BY OR DISCLOSED TO ANY THIRD PARTY WITHOUT PRIOR WRITTEN CONSENT OF COMPAL ELECTRONICS, INC.

# Version change list (P.I.R. List)



| Item | Fixed Issue | Rev. | PG# | Modify List | B.Ver# | Phase |
|---|---|---|---|---|---|---|
| 1 | Add Energize star function | A2 | 35 | Add C(874~876),R903,J1,Q94,U77 | | |
| 2 | Modify LAN chip power control | A2 | 24 | Add C877,R902,Q93 | | |
| 3 | Fixed Speaker no function | A2 | 37 | Change Q91 form SI2301BDS to MMBT3906, Del R895 | | |
| 4 | Fixed SWDJ function can't work | A2 | 36 | Add R904 | | |
| 5 | Fixed Audio Codec can't work | A2 | 29 | Add R905,Q96 | | |
| 6 | Fixed USB Port4 can't work | A2 | 27 | Swap USB_N4 & USB_P4 | | |
| 7 | Fixed EMI issue | A2 | 32 37 | Add R908,C878,C879 | | |
| 8 | Fixed SWDJ mode EC_MUTE# ISSUE | B | 30 | Add D39,Q99,R914 | | |
| 9 | Fixed CMOS noise | B | 36 | Add R912,C880 | | |
| 10 | Fixed EMI | B | 25 | Add C881,C882 | | |
| 11 | Add chipset id | B | 33 | Add R915,R916 | | |
| 12 | Fix SWDJ Subwoofer issue | B | 31 | Add R917 | | |

THIS SHEET OF ENGINEERING DRAWING IS THE PROPRIETARY PROPERTY OF COMPAL ELECTRONICS, INC. AND CONTAINS CONFIDENTIAL AND TRADE SECRET INFORMATION. THIS SHEET MAY NOT BE TRANSFERED FROM THE CUSTODY OF THE COMPETENT DIVISION OF R&D DEPARTMENT EXCEPT AS AUTHORIZED BY COMPAL ELECTRONICS, INC. NEITHER THIS SHEET NOR THE INFORMATION IT CONTAINS MAY BE USED BY OR DISCLOSED TO ANY THIRD PARTY WITHOUT PRIOR WRITTEN CONSENT OF COMPAL ELECTRONICS, INC.