Bitland Electronics Co.,LTD

Board name: Mother Board Schematic
Project name: BM5XXX
Version: REV:1.X
initial Date: 201X-0X-XX
New update:

1. System Block Diagram & Schematic page description;
2. Power Block Diagram & Discription;
3. Annotations & information;
4. Schematic modify Item and history;
5. Power on & off Sequence;
6. ACPI Mode Switch Timings;
7. Power On Sequence Map;
8. CLOCK Distribution;
9. Power Distribution;

Bitland Confidential

Hardware drawing by:		Hardware check by:		EMI Check by:	
Power drawing by:		Power check by:			
		Manager Sign by:			

Bitland Information Technology Co.,Ltd		
Page Name	Title	
Size A3	Project Name BM5080	Rev 1.2
Date:	Sheet 1 of 42	

PROPERTY NOTE: this document contains information confidential and property to Bitland Technology Co.,Ltd. and shall not be reproduced or transferred to other documents or disclosed to others or used for any purpose other than that for which it was obtained with the expressed written consent of Bitland

Bitland Electronics Co.,LTD
SYSTEM BLOCK Ver:C

CONTENT

1 Title
2 System Block & Index
3 PWR Block & description
4 NOTE
5 Sch Modify and history
6 CK-505

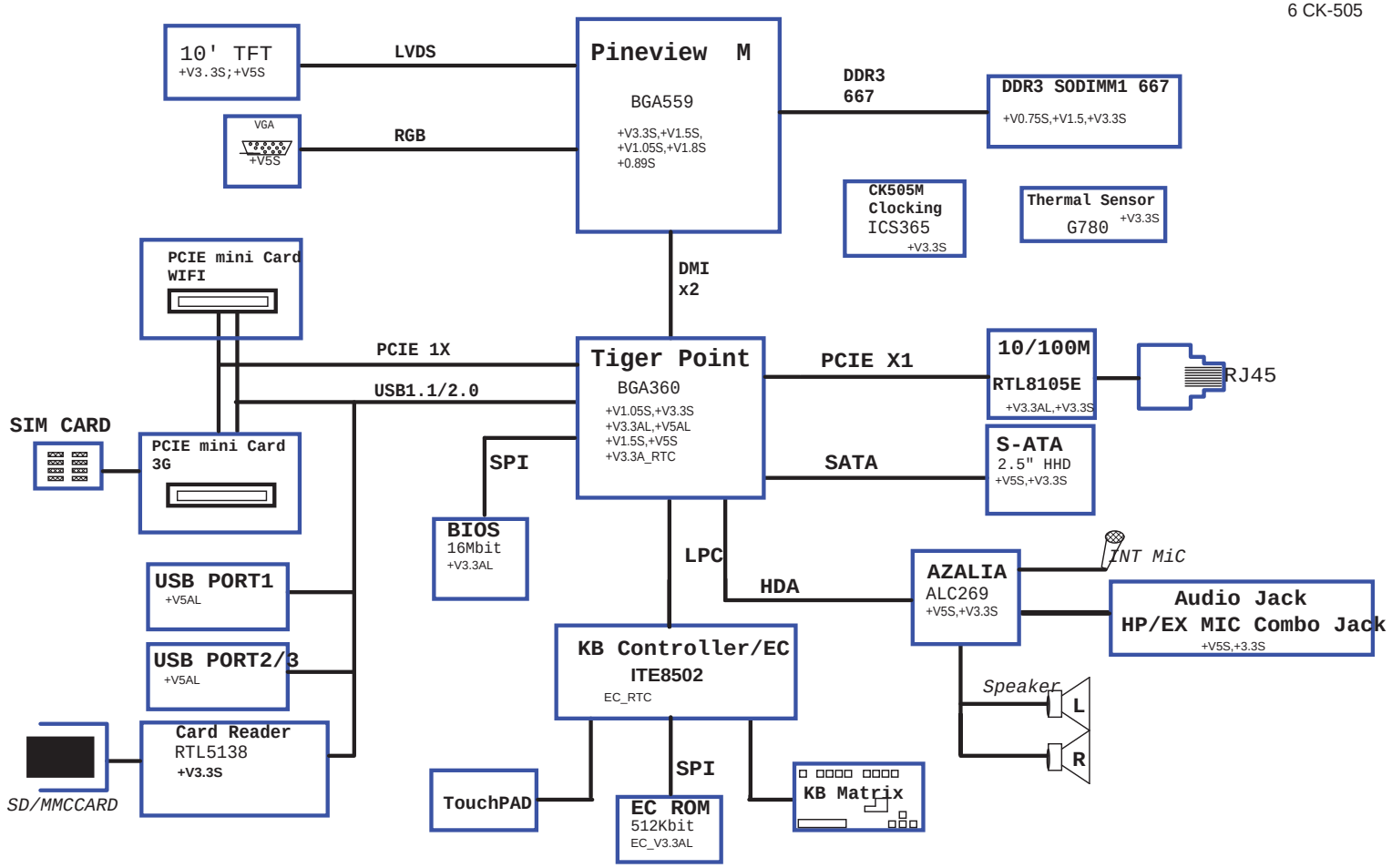

Bitland Information Technology Co.,Ltd		
Page Name	SYS BLOCK & SCH PAGE	
Size B	Project Name BM5080	Rev 1.2
Date:	Sheet 2 of 42	

PROPERTY NOTE: this document contains information confidential and property to Bitland Technology Co.,Ltd. and shall not be reproduced or transferred to other documents or disclosed to others or used for any purpose other than that for which it was obtained with the expressed written consent of Bitland

S18 POWER BLOCK Ver:A

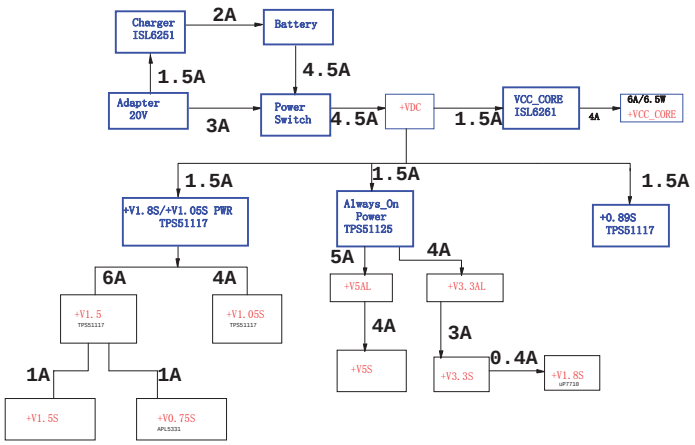

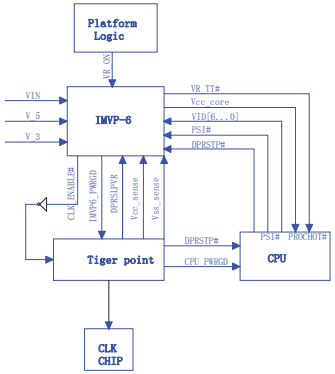

POWER Distribution

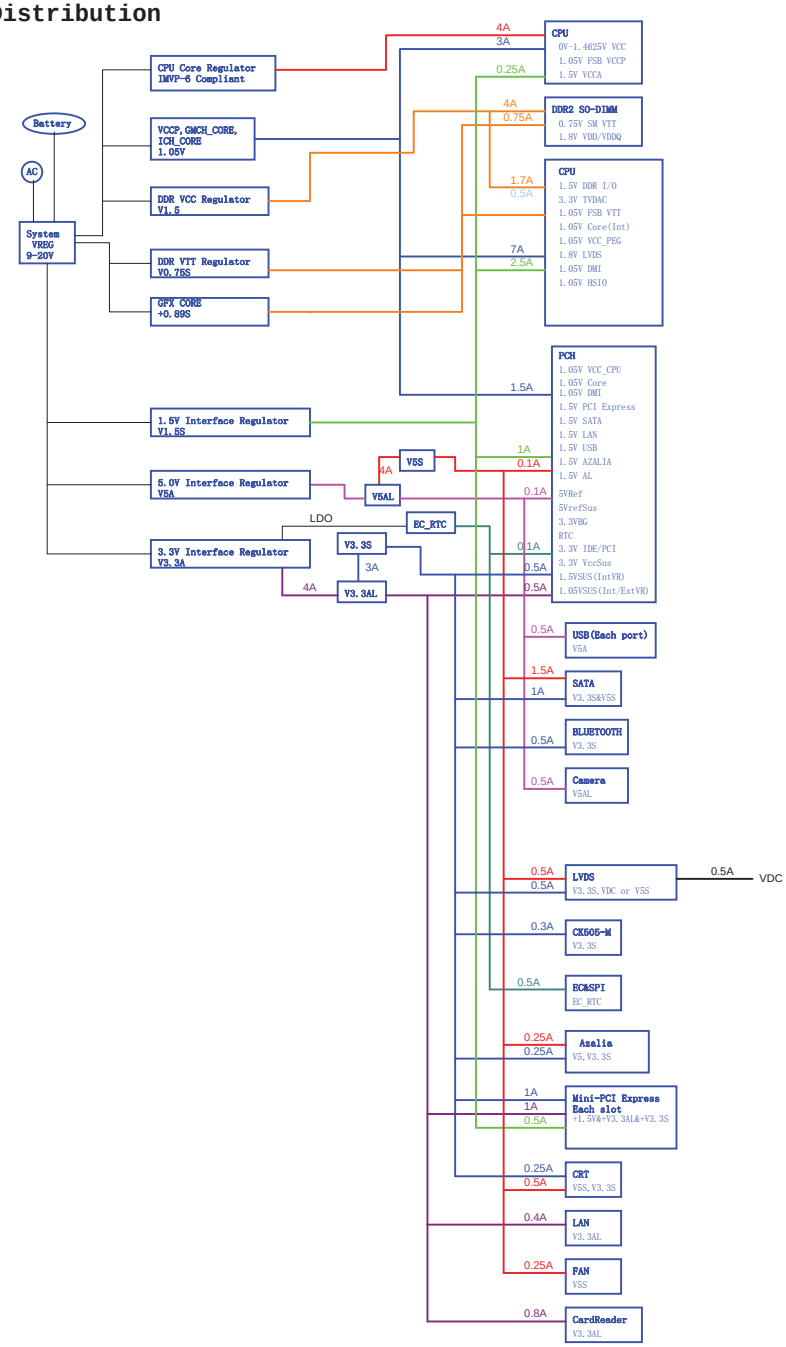

B·I·T	Billand Information Technology Co.Ltd		
Page Name	PWR Block & description		
Size D	Project Name	BM5080	Rev 1.2
Date:	Sheet 3 of 42		

PROPERTY NOTE: this document contains information confidential and property to Billand Technology Co.Ltd. and shall not be reproduced or transferred to other documents or disclosed to others or used for any purpose other than that for which it was obtained with the expressed written consent of Billand

Voltage Rails

+VDC	Primary DC system power supply (9V-20V)
+VBATTERY	Battery Power supply (9-20V)
+VCC_CORE	Core Voltage for CPU
+V1.05S	1.05V for Pineview & Tiger point core / FSB VTT
+V1.5	1.5V power rail for DDR3
+V0.75S	0.75V DDR3 Termination voltage
+V3.3AL	3.3V always on power rail
+V5AL	5V for ICH7-M's VCC5 Refsus
+V3.3S	3.3V main power rail
+V5S	5V main power rail
+V0.89S	0.89V for GFX

Board stack up description

PCB Layers	
Top(Signal1)	Trace Impedence:55ohm +/-15%
Power	
Ground	
Bottom(Signal4)	

USB Table

USB Port#	Function Description
0	
1	
2	
3	
4	
5	
6	
7	

I2C SMB Address

Device	Address	Hex	Master
Clock Generator	1101 001x	D2	ICH7-M
SO-DIMM0	1010 000x	A0	ICH7-M
CPU Thermal Sensor	1001 100x	98	KBC
Smart Battery	0001 011x	16	KBC
PCIE Slot	TBD	TBD	ICH7-M

Power States

Signal	SLP_S3#	SLP_S4#	SLP_S5#	+V*ALW	+V*	+V*S	Clock
S0(Full On)	HIGH	HIGH	HIGH	ON	ON	ON	ON
S3(STM)	LOW	HIGH	HIGH	ON	ON	OFF	OFF
S4(STD)	LOW	LOW	HIGH	ON	OFF	OFF	OFF
S5(SoftOff)	LOW	LOW	LOW	ON	OFF	OFF	OFF

Wake up Events

LID switch from EC
Power switch from EC

PCB Footprints

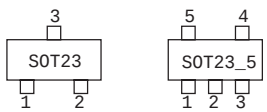

ns: Component marked "ns" is not stuff

Bitland Information Technology Co.,Ltd

Page Name: Notes & Anotation

Size: A3 | Project Name: BM5080 | Rev: 1.2

Date: | Sheet 4 of 42

PROPERTY NOTE: this document contains information confidential and property to Bitland Technology Co.,Ltd. and shall not be reproduced or transferred to other documents or disclosed to others or used for any purpose other than that for which it was obtained with the expressed written consent of Bitland

Schematic modify Item and history:

Bitland Information Technology Co.,Ltd

Page Name	Sch Modify and history	
Size A3	Project Name BM5080	Rev 1.2
Date:	Sheet 5 of 42	

PROPERTY NOTE: this document contains information confidential and property to Bitland Technology Co.,Ltd. and shall not be reproduced or transferred to other documents or disclosed to others or used for any purpose other than that for which it was obtained with the expressed written consent of Bitland

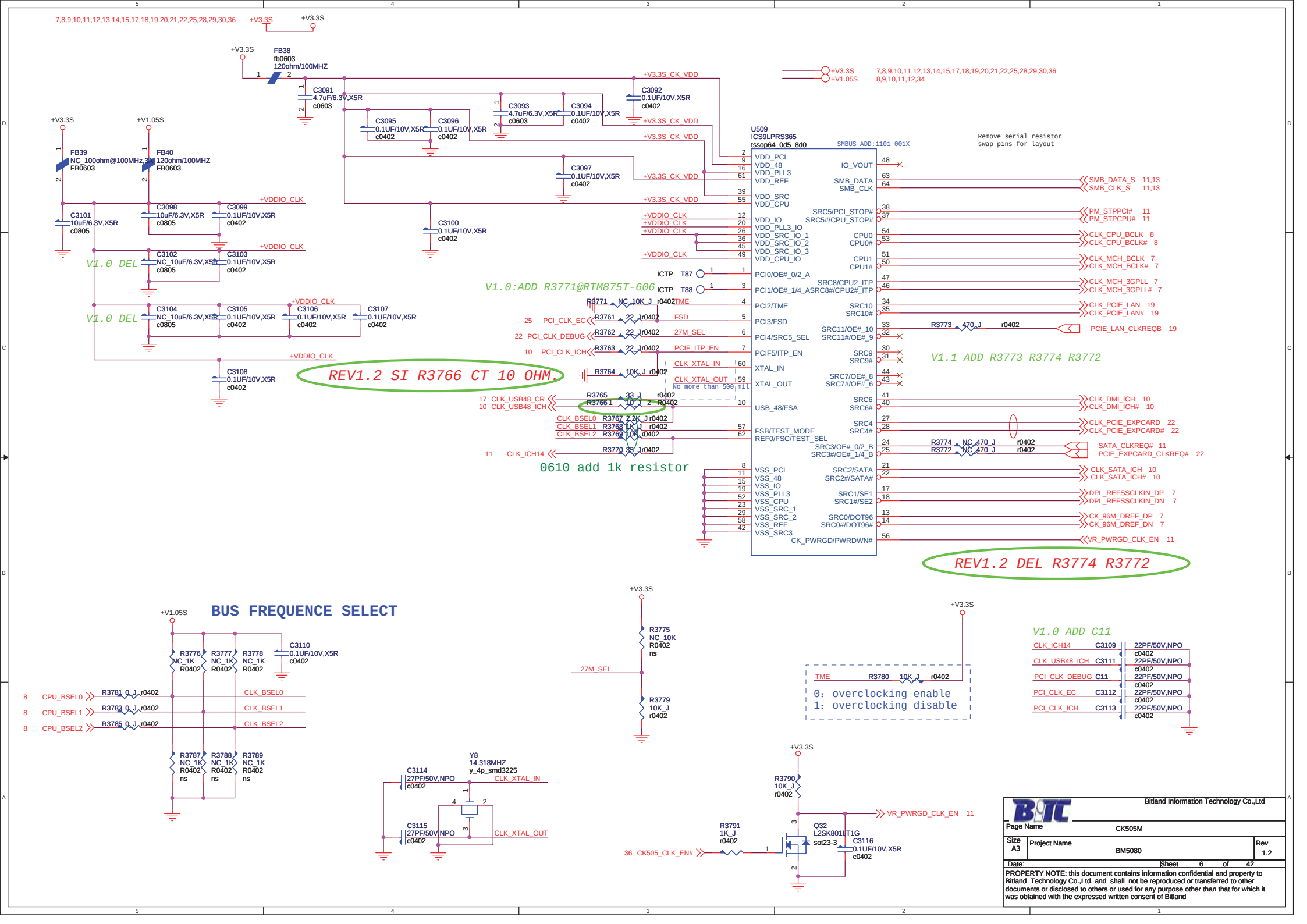
U509
ICS9LPRS365
tssop64_0d5_8d0
SMBUS ADD:1101 001X
Remove serial resistor
swap pins for layout
V1.0 DEL
V1.0 DEL
V1.0:ADD R3771@RTM875T-606
REV1.2 SI R3766 CT 10 OHM.
0610 add 1k resistor
V1.1 ADD R3773 R3774 R3772
REV1.2 DEL R3774 R3772
BUS FREQUENCE SELECT
V1.0 ADD C11
0: overclocking enable
1: overclocking disable
Y8
14.318MHZ
y_4p_smd3225
Bitland Information Technology Co.,Ltd
Page Name
CK505M
Size
A3
Project Name
BM5080
Rev
1.2
Date:
Sheet 6 of 42
PROPERTY NOTE: this document contains information confidential and property to Bitland Technology Co.,Ltd. and shall not be reproduced or transferred to other documents or disclosed to others or used for any purpose other than that for which it was obtained with the expressed written consent of Bitland

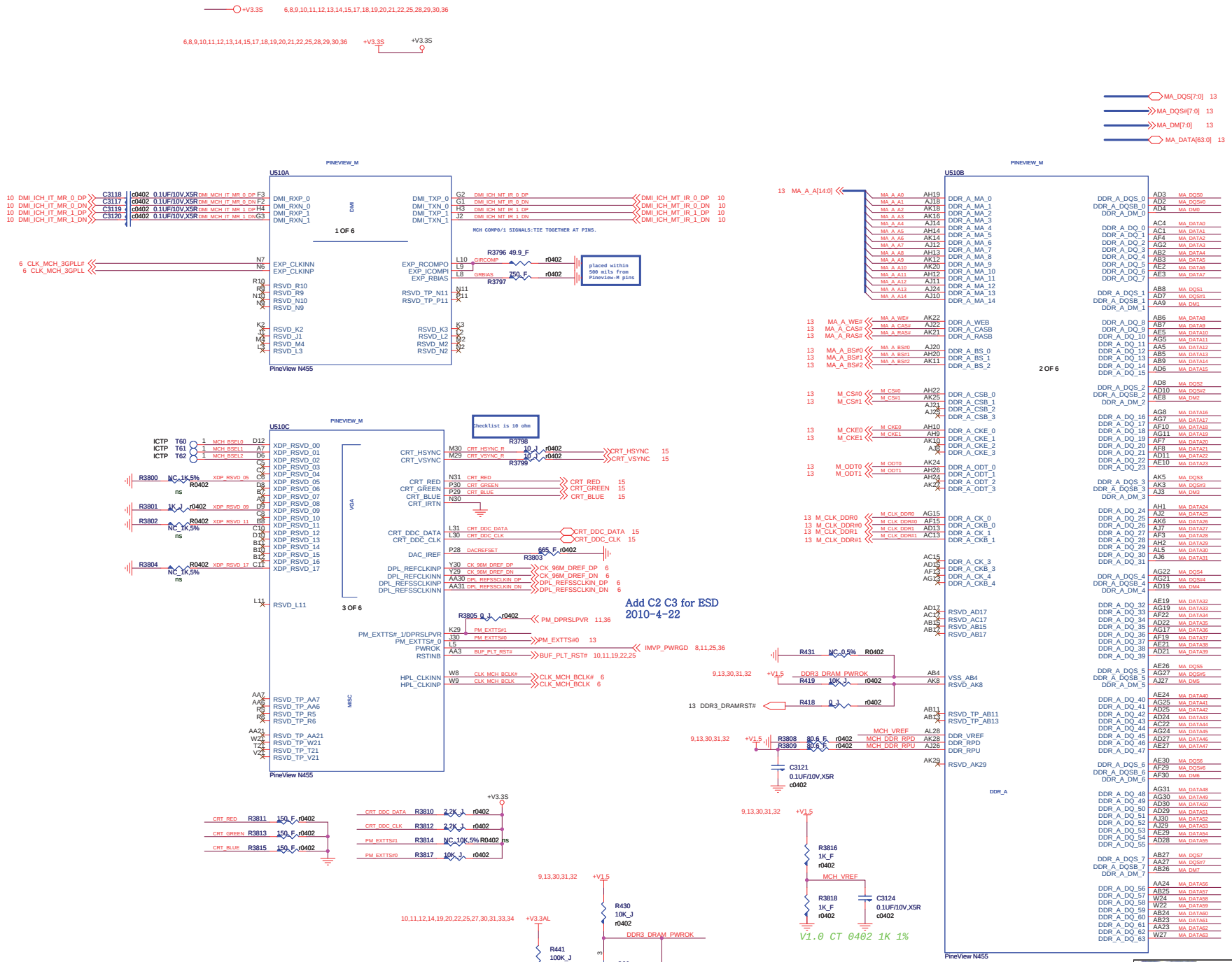

Bitland Information Technology Co.,Ltd	
Page Name	Pineview-M DMI DDR VGA
Size C	Project Name BM5080
Rev	1.2
Date:	Sheet 7 of 42

PROPERTY NOTE: this document contains information confidential and property to Bitland Technology Co.,Ltd. and shall not be reproduced or transferred to other documents or disclosed to others or used for any purpose other than that for which it was obtained with the expressed written consent of Bitland

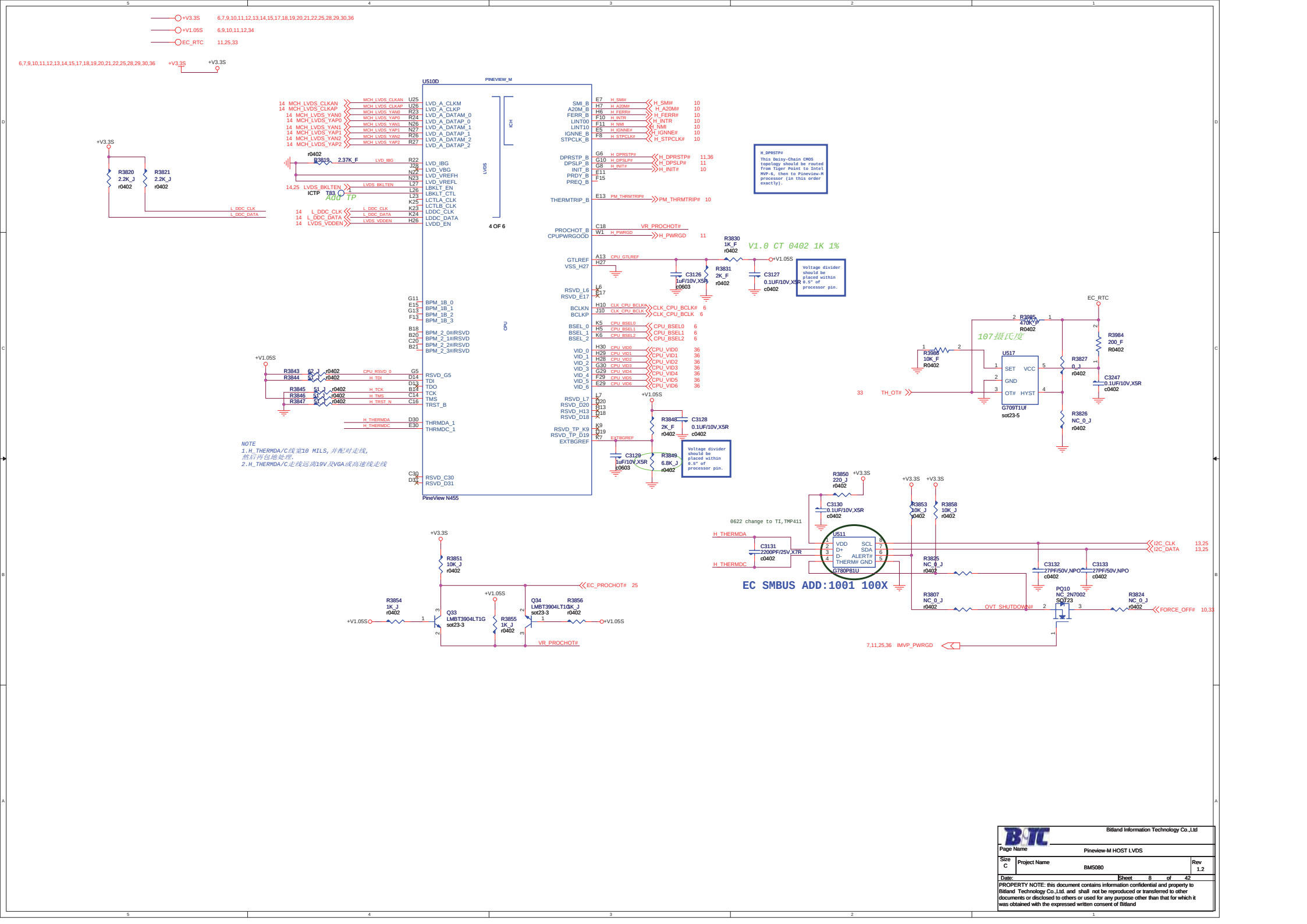

Bitland Information Technology Co.,Ltd

Page Name	Pineview-M HOST LVDS	
Size C	Project Name BM5080	Rev 1.2
Date:	Sheet 8 of 42	

PROPERTY NOTE: this document contains information confidential and property to Bitland Technology Co.,Ltd. and shall not be reproduced or transferred to other documents or disclosed to others or used for any purpose other than that for which it was obtained with the expressed written consent of Bitland

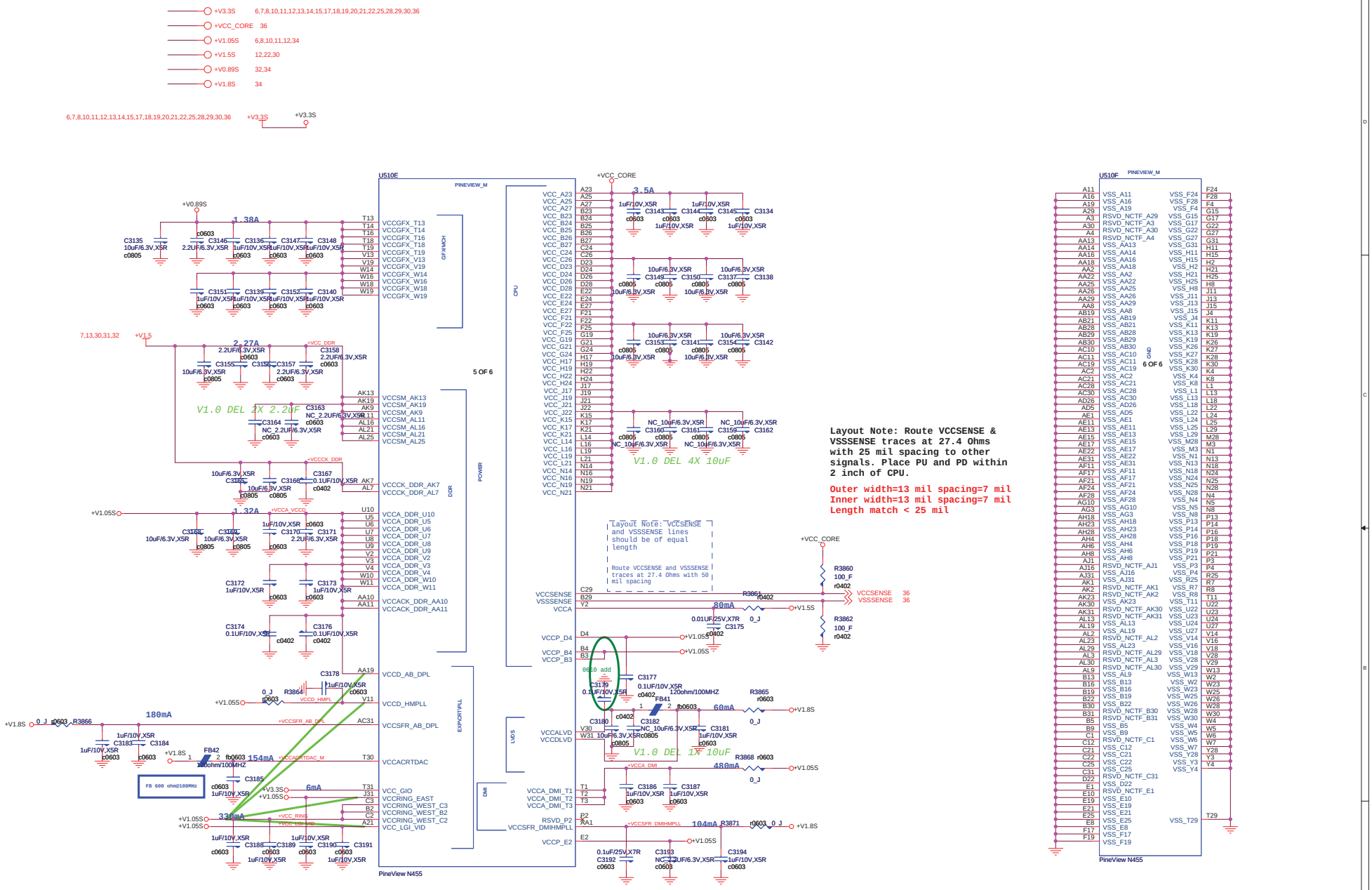

Bitland Information Technology Co.,Ltd

Page Name	Pineview-M POWER GND		
Size C	Project Name	BM5080	Rev 1.2
Date:	Sheet 9 of 42		

PROPERTY NOTE: this document contains information confidential and property to Bitland Technology Co.,Ltd. and shall not be reproduced or transferred to other documents or disclosed to others or used for any purpose other than that for which it was obtained with the expressed written consent of Bitland

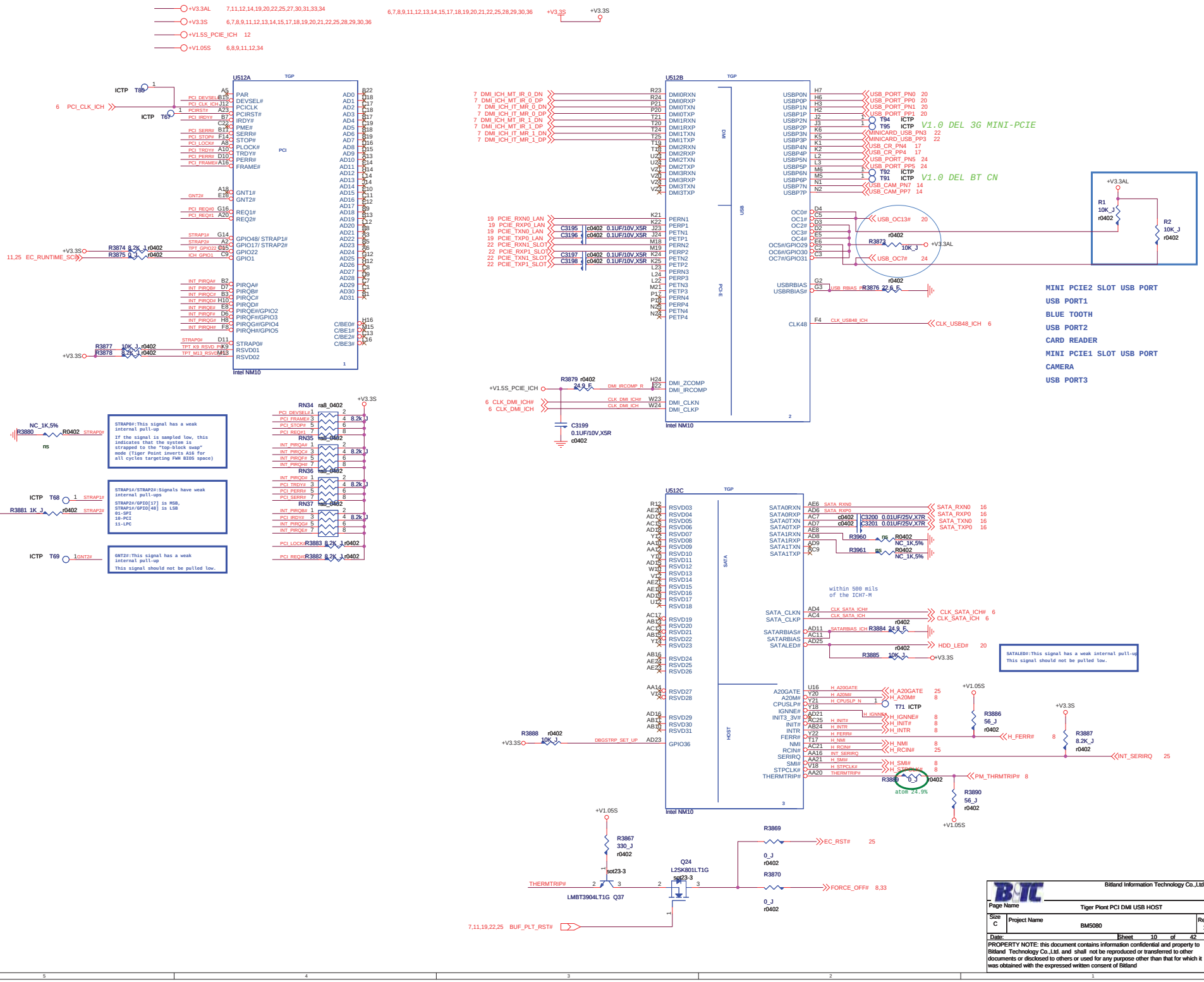
+V3.3AL 7,11,12,14,19,20,22,25,27,30,31,33,34
+V3.3S 6,7,8,9,11,12,13,14,15,17,18,19,20,21,22,25,28,29,30,36
+V1.5S_PCIE_ICH 12
+V1.05S 6,8,9,11,12,34
6,7,8,9,11,12,13,14,15,17,18,19,20,21,22,25,28,29,30,36 +V3.3S +V3.3S
U512A TGP
PCI
Intel NM10
U512B TGP
USB
PCI-E
Intel NM10
U512C TGP
SATA
HOST
Intel NM10
V1.0 DEL 3G MINI-PCIE
V1.0 DEL BT CN
MINI PCIE2 SLOT USB PORT
USB PORT1
BLUE TOOTH
USB PORT2
CARD READER
MINI PCIE1 SLOT USB PORT
CAMERA
USB PORT3
STRAP0#:This signal has a weak internal pull-up
If the signal is sampled low, this indicates that the system is strapped to the "top-block swap" mode (Tiger Point inverts A16 for all cycles targeting FWH BIOS space)
STRAP1#/STRAP2#:Signals have weak internal pull-ups
STRAP2#/GPIO[17] is MSB, STRAP1#/GPIO[48] is LSB
01-SPI
10-PCI
11-LPC
GNT2#:This signal has a weak internal pull-up
This signal should not be pulled low.
SATALED#:This signal has a weak internal pull-up
This signal should not be pulled low.
within 500 mils of the ICH7-M
Bitland Information Technology Co.,Ltd
Page Name Tiger Piont PCI DMI USB HOST
Size C
Project Name BM5080
Rev 1.2
Date:
Sheet 10 of 42
PROPERTY NOTE: this document contains information confidential and property to Bitland Technology Co.,Ltd. and shall not be reproduced or transferred to other documents or disclosed to others or used for any purpose other than that for which it was obtained with the expressed written consent of Bitland

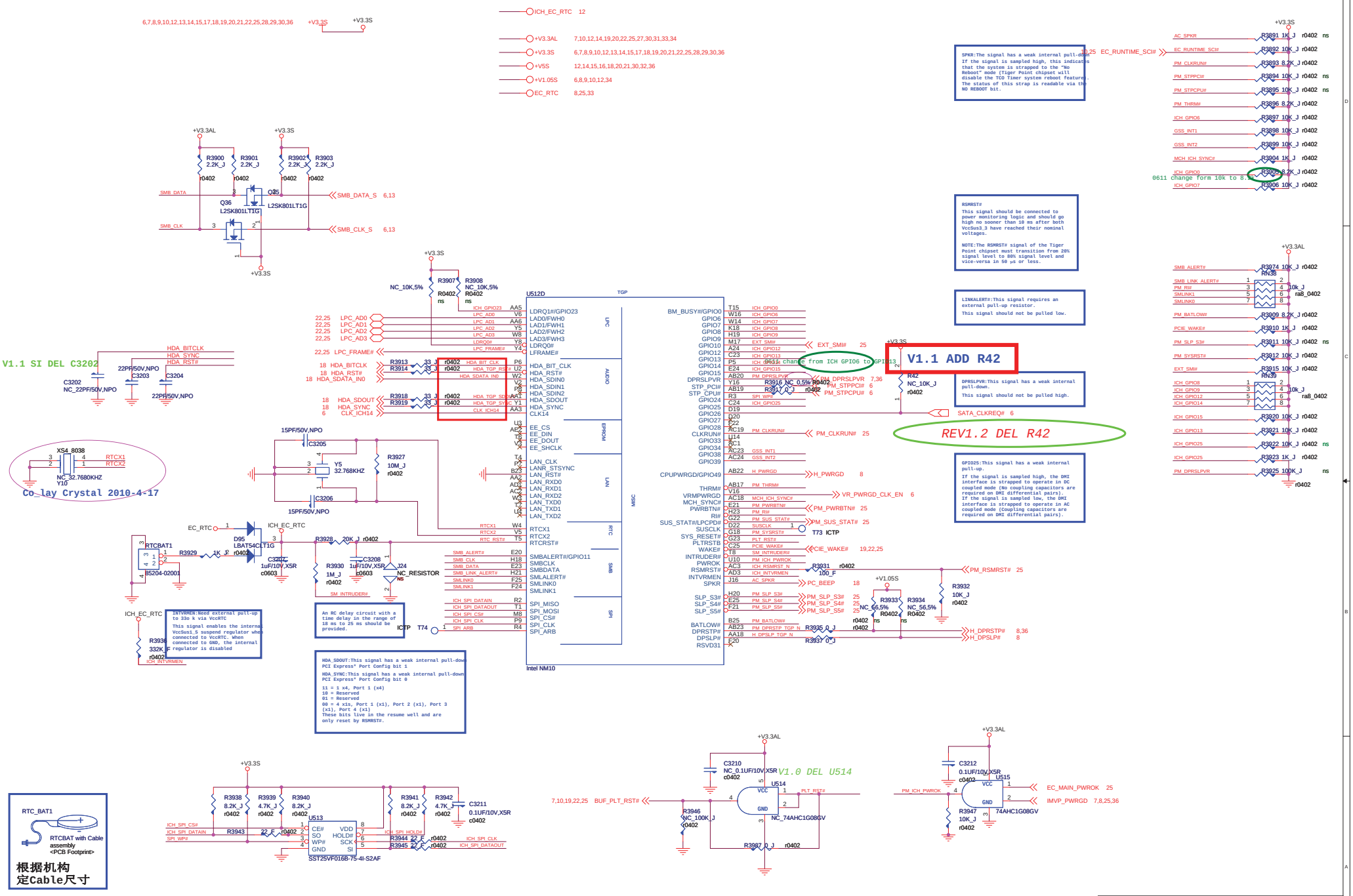

Bitland Information Technology Co.,Ltd

Page Name	Tiger point LPC ACPI		
Size C	Project Name	BM5080	Rev 1.2
Date:	Sheet 11 of 42		

PROPERTY NOTE: this document contains information confidential and property to Bitland Technology Co.,Ltd. and shall not be reproduced or transferred to other documents or disclosed to others or used for any purpose other than that for which it was obtained with the expressed written consent of Bitland

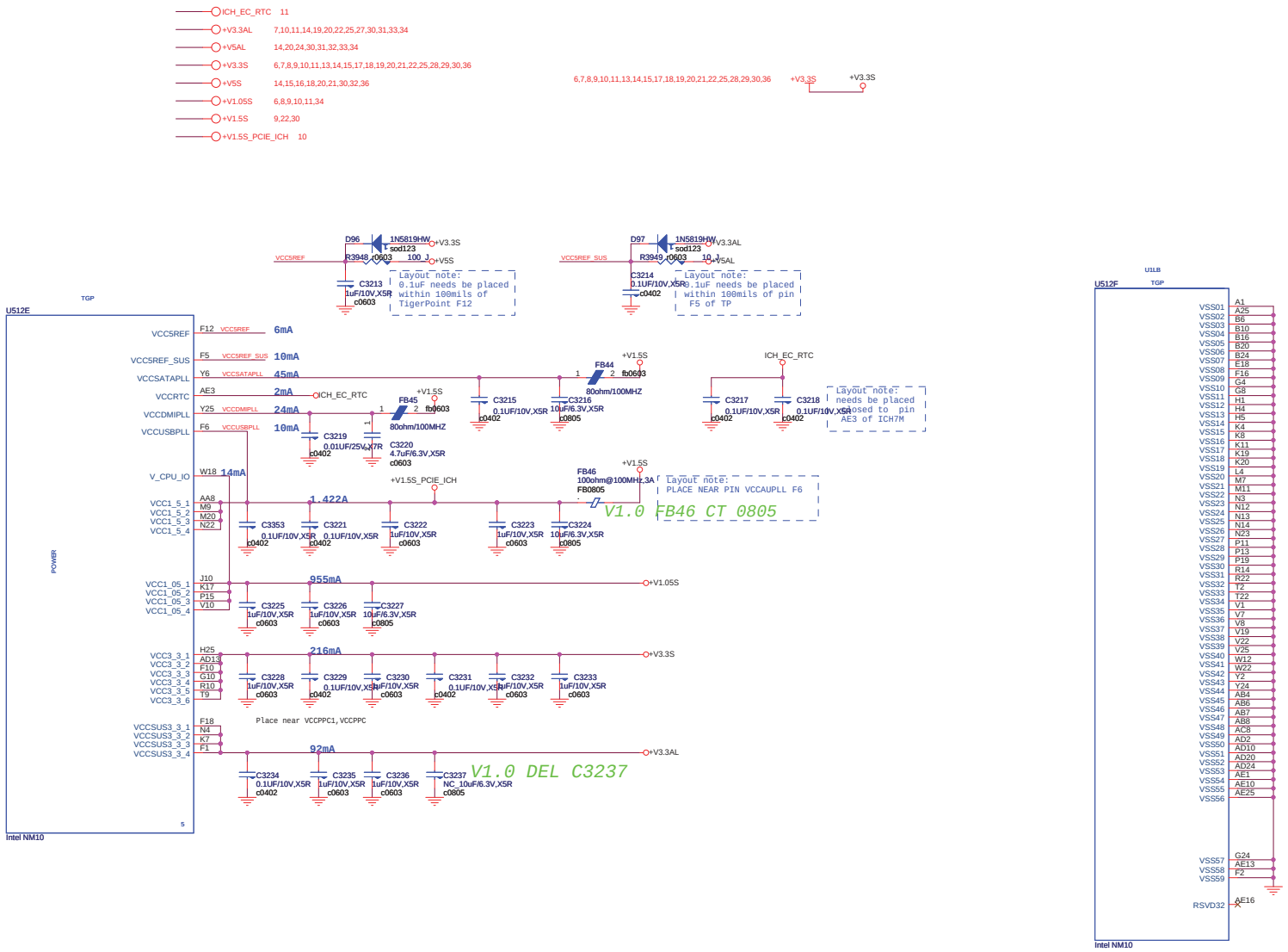

Bitland Information Technology Co.,Ltd

Page Name	Tiger Piont POWER GND	
Size C	Project Name BM5080	Rev 1.2
Date:	Sheet 12 of 42	

PROPERTY NOTE: this document contains information confidential and property to Bitland Technology Co.,Ltd. and shall not be reproduced or transferred to other documents or disclosed to others or used for any purpose other than that for which it was obtained with the expressed written consent of Bitland

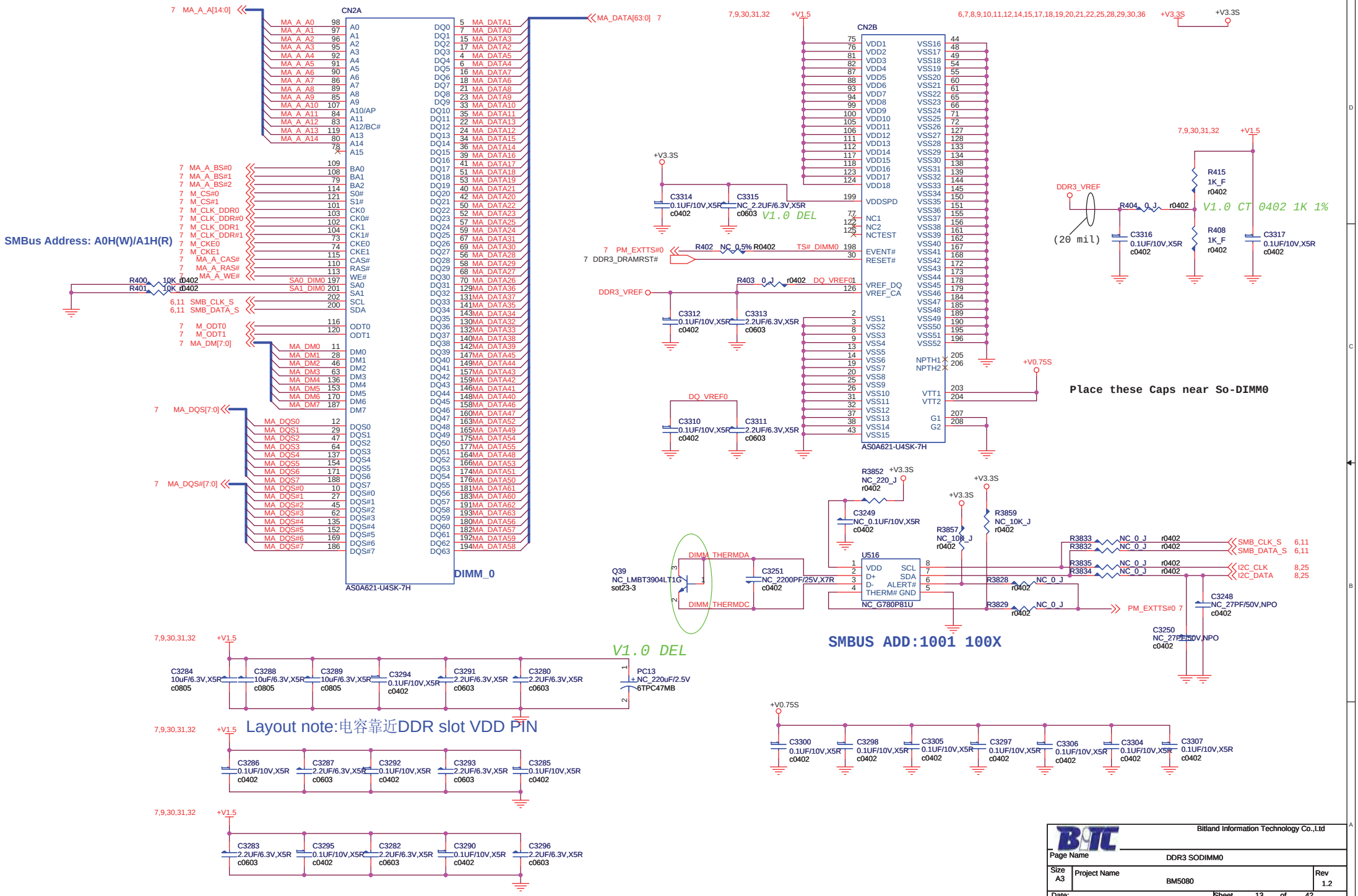
CN2A
DIMM_0
AS0A621-U4SK-7H
SMBus Address: A0H(W)/A1H(R)
CN2B
AS0A621-U4SK-7H
V1.0 DEL
V1.0 CT 0402 1K 1%
Place these Caps near So-DIMM0
U516
NC_G780P81U
SMBUS ADD:1001 100X
Layout note:电容靠近DDR slot VDD PIN
Bitland Information Technology Co.,Ltd
Page Name
DDR3 SODIMM0
Size
A3
Project Name
BM5080
Rev
1.2
Date:
Sheet 13 of 42
PROPERTY NOTE: this document contains information confidential and property to Bitland Technology Co.,Ltd. and shall not be reproduced or transferred to other documents or disclosed to others or used for any purpose other than that for which it was obtained with the expressed written consent of Bitland

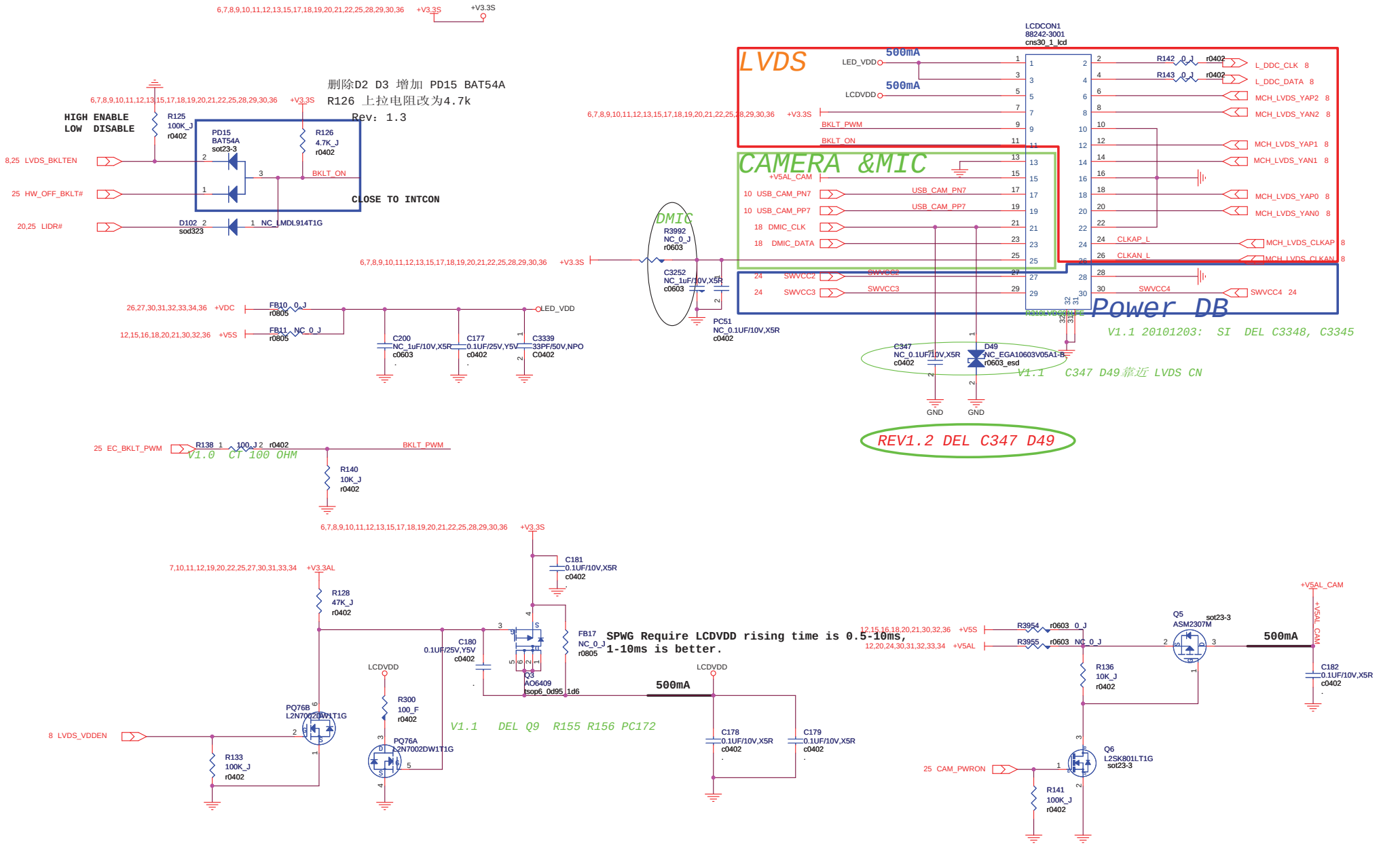

Bitland Information Technology Co.,Ltd. 4-6F,#7Building,Xili Tongfuyu Industrial Town Nanshan District,Shenzhen			
BITC_PN	BM5080	Rev	1.2
TITLE	Netbook	ID	LVDS
PAGE DETAIL	<Doc>	Date	
Size	Custom	Sheet	14 of 42

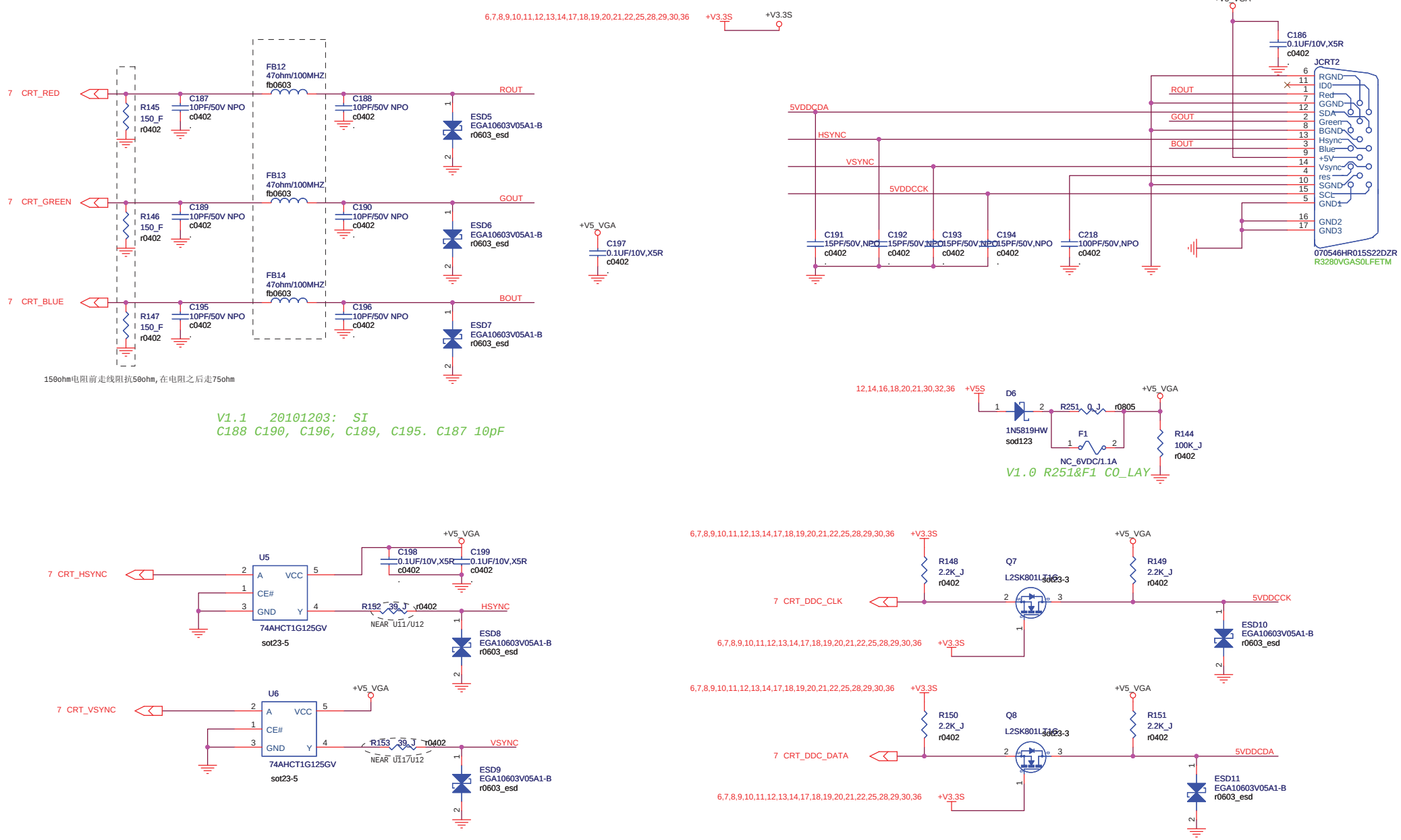

Bitland Information Technology Co.,Ltd.

4-6F,#7Building,Xili Tongfuyu Industrial Town Nanshan District,Shenzhen

BITC_PN	BM5080	Rev	1.2
TITLE	Netbook	ID	CRT	Size	A3
PAGE DETAIL	<Doc>	Date		Sheet	15 of 42

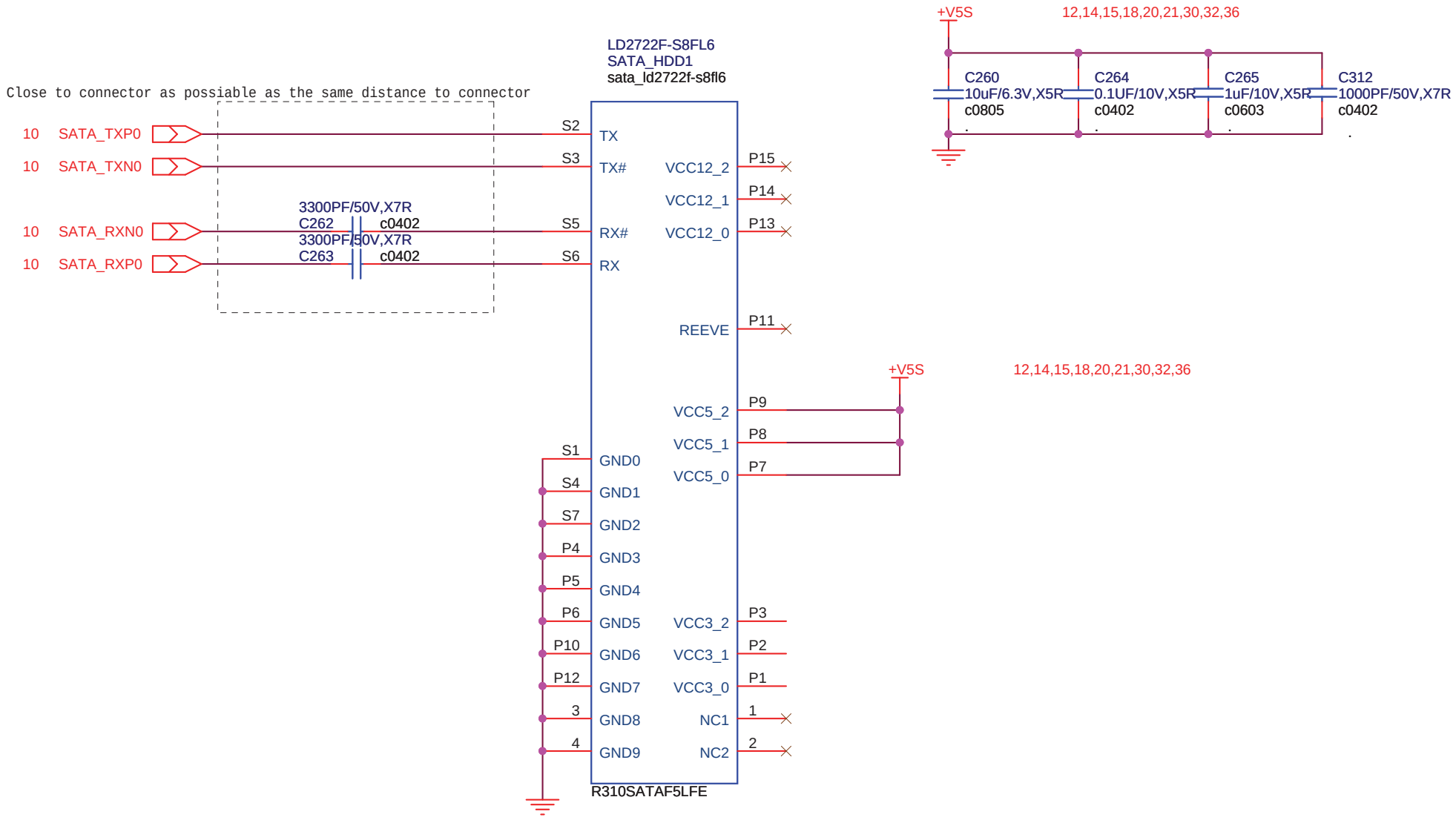

Bitland Information Technology Co.,Ltd.

4-6F,#7Building,Xili Tongfuyu Industrial Town Nanshan District,Shenzhen

		BITC_PN	BM5080	Rev	1.2
TITLE	Netbook	ID	SATA	Size	A
PAGE DETAIL	<Doc>	Date		Sheet	16 of 42

REV1.2 R11 's Footprint change 0603 to 0402

6,7,8,9,10,11,12,13,14,15,18,19,20,21,22,25,28,29,30,36 +V3.3S

10 USB_CR_PN4 USB_CR_PN4

10 USB_CR_PP4 USB_CR_PP4

6 CLK_USB48_CR R3973 r0402 0_J CLK_IN

C8 22PF/50V,NPO c0402

V1.1 20101203: SI DEL R8 CT C8 22PF

+V3.3S 3V3_IN

FB34 120ohm/100MHZ fb0603

C283 4.7uF/6.3V,X5R c0603

C541 0.1UF/10V,X5R c0402

C542 NC_0.1UF/10V,X5R c0402

C3243 1uF/10V,X5R c0603

PC81 100pF/50V,NPO C0402

R11 6.2K_F FN01620100LFE r0402

RREF

U4

RTS5138 QFN24

RREF DM DP 3V3_IN CARD_3V3 V18 GND

USB_CR_PN4 USB_CR_PP4 3V3_IN CARD_3V3 VREG

CLK_IN XD_D7 SP14 SP13 SP12 SP11

XD_CD# SP1 SP2 SP3 SP4 SP5

SP10 GPIO0 SP9 SP8 SP7 SP6

QFN24_0D5_4X4 CG25138KR0LFETM

T15 T16 T14 ICTPICTPICTP

T18 ICTP T17 ICTP T13

T12 T11 T10 ICTPICTP ICTP

SDA_CLK

C9 22PF/50V,NPO c0402

V1.1 20101203: SI DEL R9 CT C9 22PF

J6

SP12 SDA_D3 1 DAT3

SP10 SDA_CMD 2 CMD

3 VSS1

SP8 SDA_CLK 4 VDD 5 CLK

SP4 SDA_D0 6 VSS2 7 DAT0

SP3 SDA_D1 8 DAT1

SP13 SDA_D2 9 DAT2

SP6 SDA_CD CD CD

SP1 SDA_WP WP WP

CARD_3V3 10 GND1 11 GND2 12 GND3 13 GND4

C3244 1uF/10V,X5R c0603

C543 0.1UF/10V,X5R c0402

CS1S-065 sd_card_cs1s-065 JD600065P0LFETM

SDA_D3 SDA_D0 SDA_D1 SDA_D2

C14 NC_22PF/50V,NPO c0402

C10 NC_22PF/50V,NPO c0402

C12 NC_22PF/50V,NPO c0402

C13 NC_22PF/50V,NPO c0402

Internal SD/MMC Card CN

Bitland Information Technology Co.,Ltd.

4-6F,#7Building,Xili Tongfuyu Industrial Town Nanshan District,Shenzhen

		BITC_PN	BM5080	Rev	1.2
TITLE	Netbook	ID	CARDREADER	Size	A
PAGE DETAIL	<Doc>	Date		Sheet	17 of 42

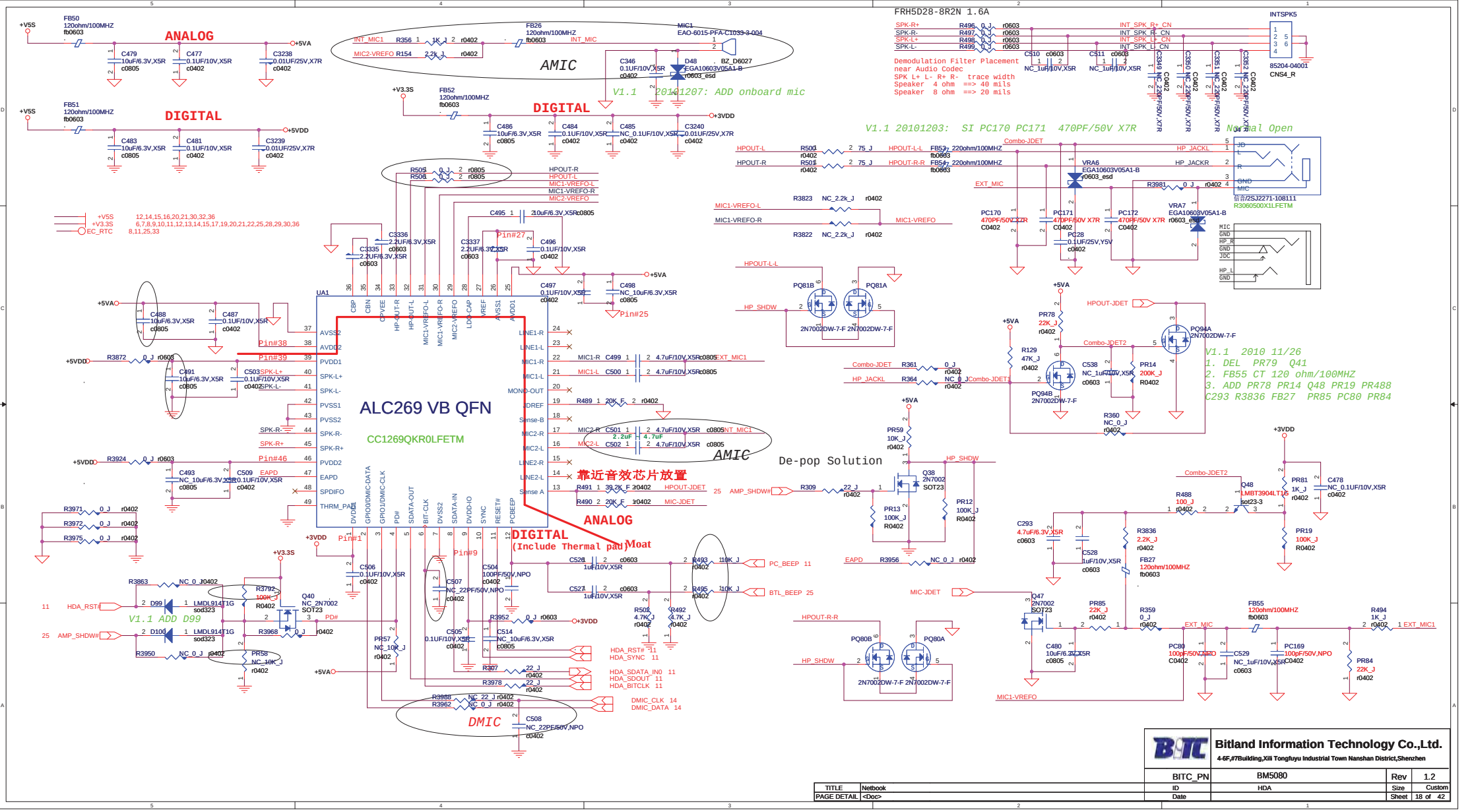
ANALOG
DIGITAL
AMIC
V1.1 20101207: ADD onboard mic
FRH5D28-8R2N 1.6A
Demodulation Filter Placement
near Audio Codec
SPK L+ L- R+ R- trace width
Speaker 4 ohm ==> 40 mils
Speaker 8 ohm ==> 20 mils
V1.1 20101203: SI PC170 PC171 470PF/50V X7R
Normal Open
ALC269 VB QFN
CC1269QKR0LFETM
V1.1 2010 11/26
1. DEL PR79 Q41
2. FB55 CT 120 ohm/100MHZ
3. ADD PR78 PR14 Q48 PR19 PR488
C293 R3836 FB27 PR85 PC80 PR84
De-pop Solution
靠近音效芯片放置
DIGITAL
(Include Thermal pad)
Moat
V1.1 ADD D99
DMIC
Bitland Information Technology Co.,Ltd.
4-6F,#7Building,Xili Tongfuyu Industrial Town Nanshan District,Shenzhen
BITC_PN
BM5080
Rev
1.2
TITLE
Netbook
ID
HDA
Size
Custom
PAGE DETAIL
<Doc>
Date
Sheet
18 of 42

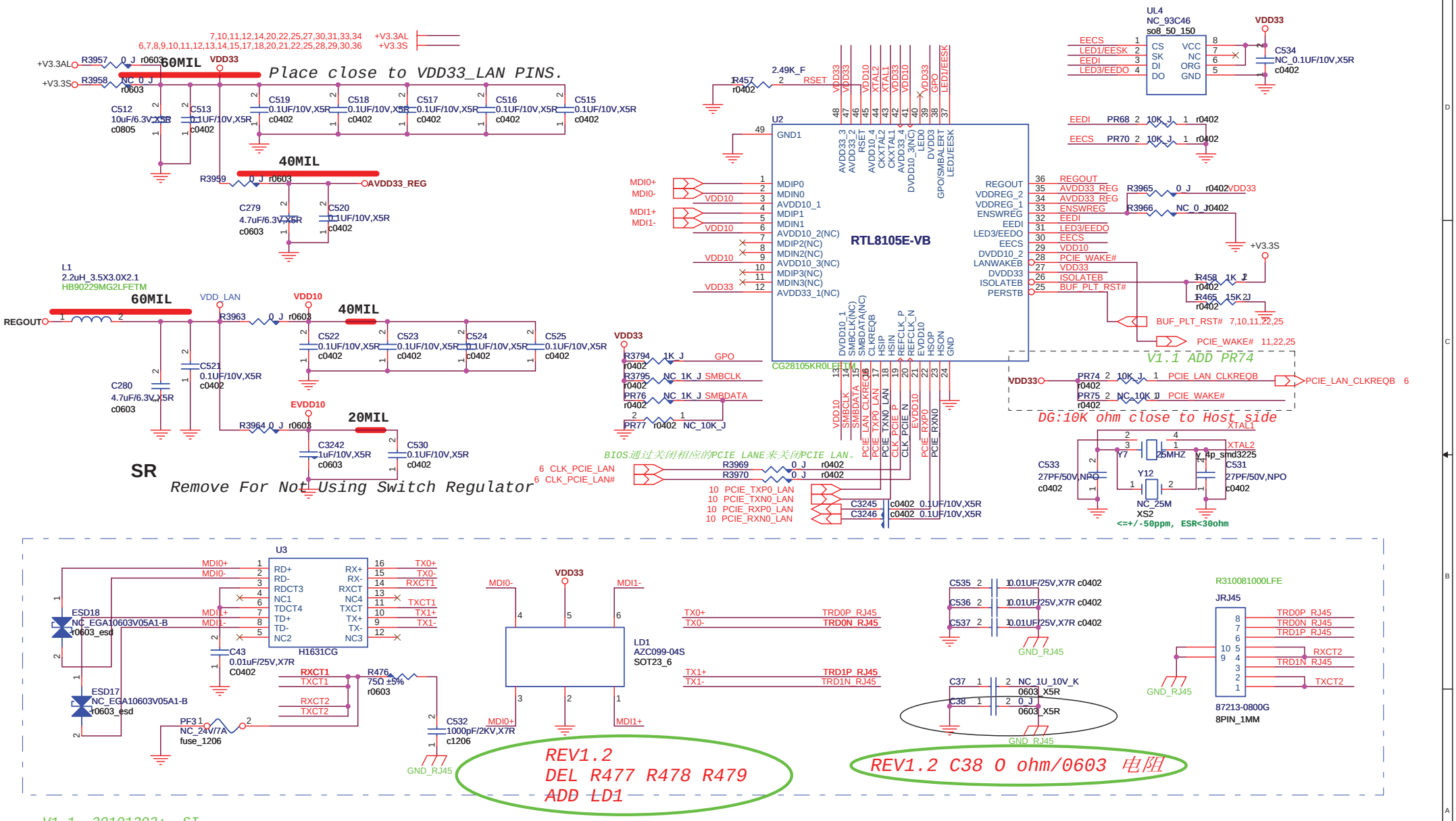

Bitland Information Technology Co.,Ltd.
4-6F,#7Building,Xili Tongfuyu Industrial Town Nanshan District,Shenzhen

BITC_PN	BM5080	Rev	1.2
TITLE	Netbook	ID	LAN
PAGE DETAIL	<Doc>	Date	
Size	B	Sheet	19 of 42

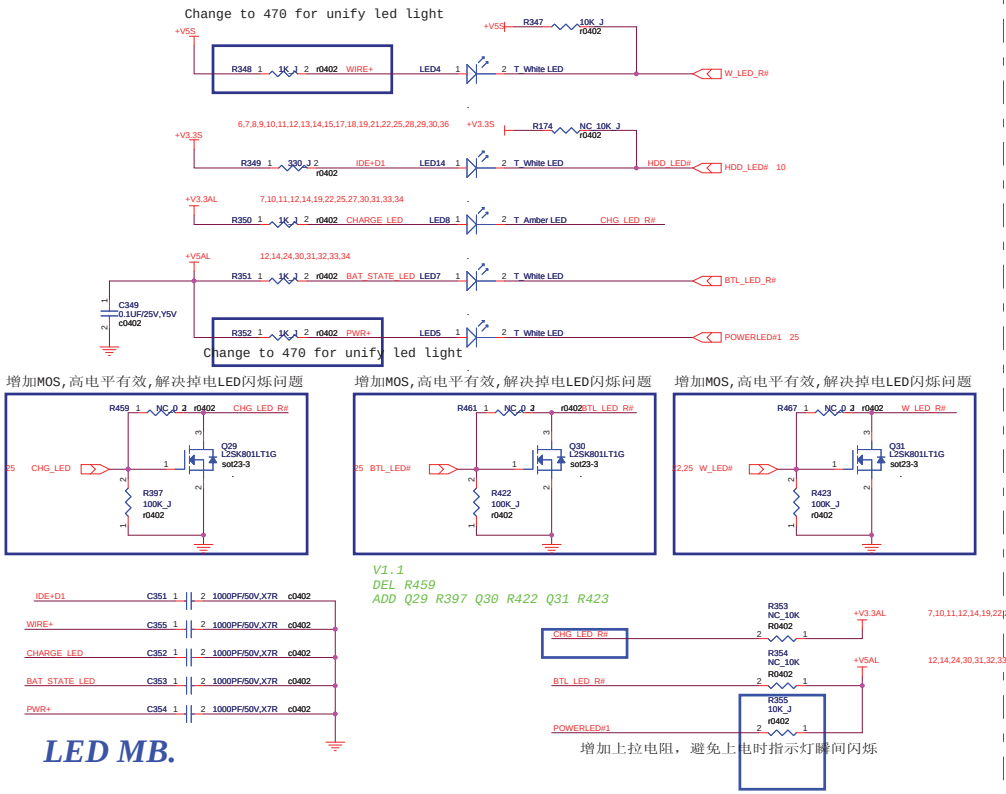

LED MB.

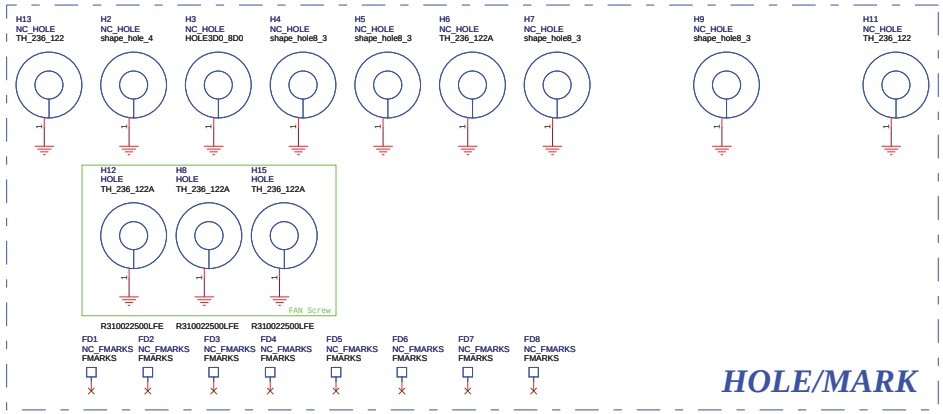

HOLE/MARK

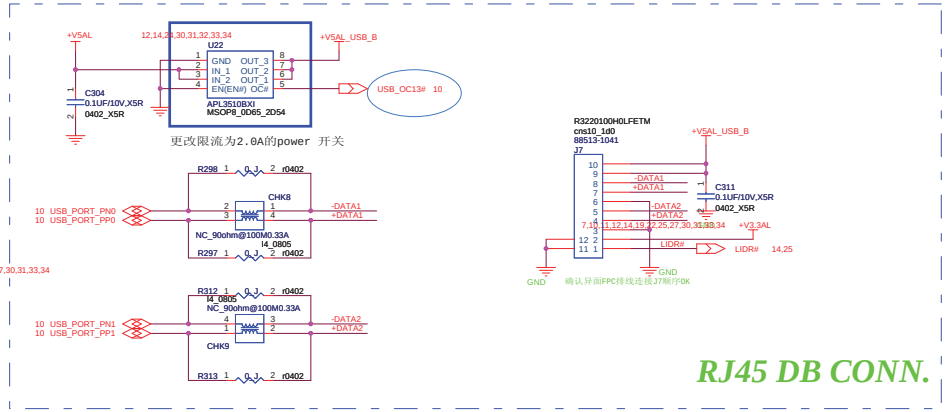

RJ45 DB CONN.

TOUCHPAD CONN.

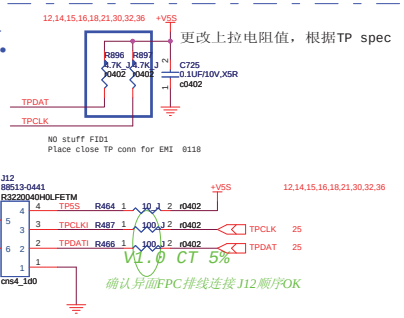

TITLE	Netbook	ID	
PAGE DETAIL	<Doc>	Date	

Bitland Information Technology Co.,Ltd.
4-8F,#7Building,Xili Tongfuyu Industrial Town Nanshan District,Shenzhen

BITC_PN	BM5080	Rev	1.2
	LED/HOLE/USBCONN/TPCONN	Size	A2
		Sheet	20 of 42

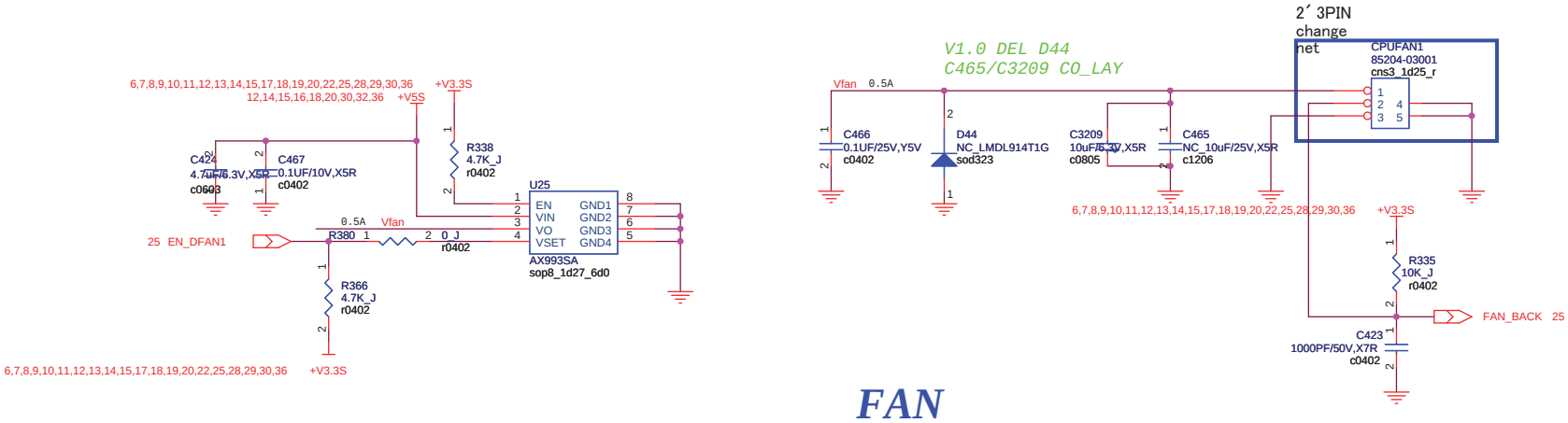

FAN

		Bitland Information Technology Co.,Ltd. 4-6F,#7Building,Xili Tongfuyu Industrial Town Nanshan District,Shenzhen			
		BITC_PN	BM5080	Rev	1.2
TITLE	Netbook	ID	BT&FAN	Size	A3
PAGE DETAIL	<Doc>	Date		Sheet	21 of 42

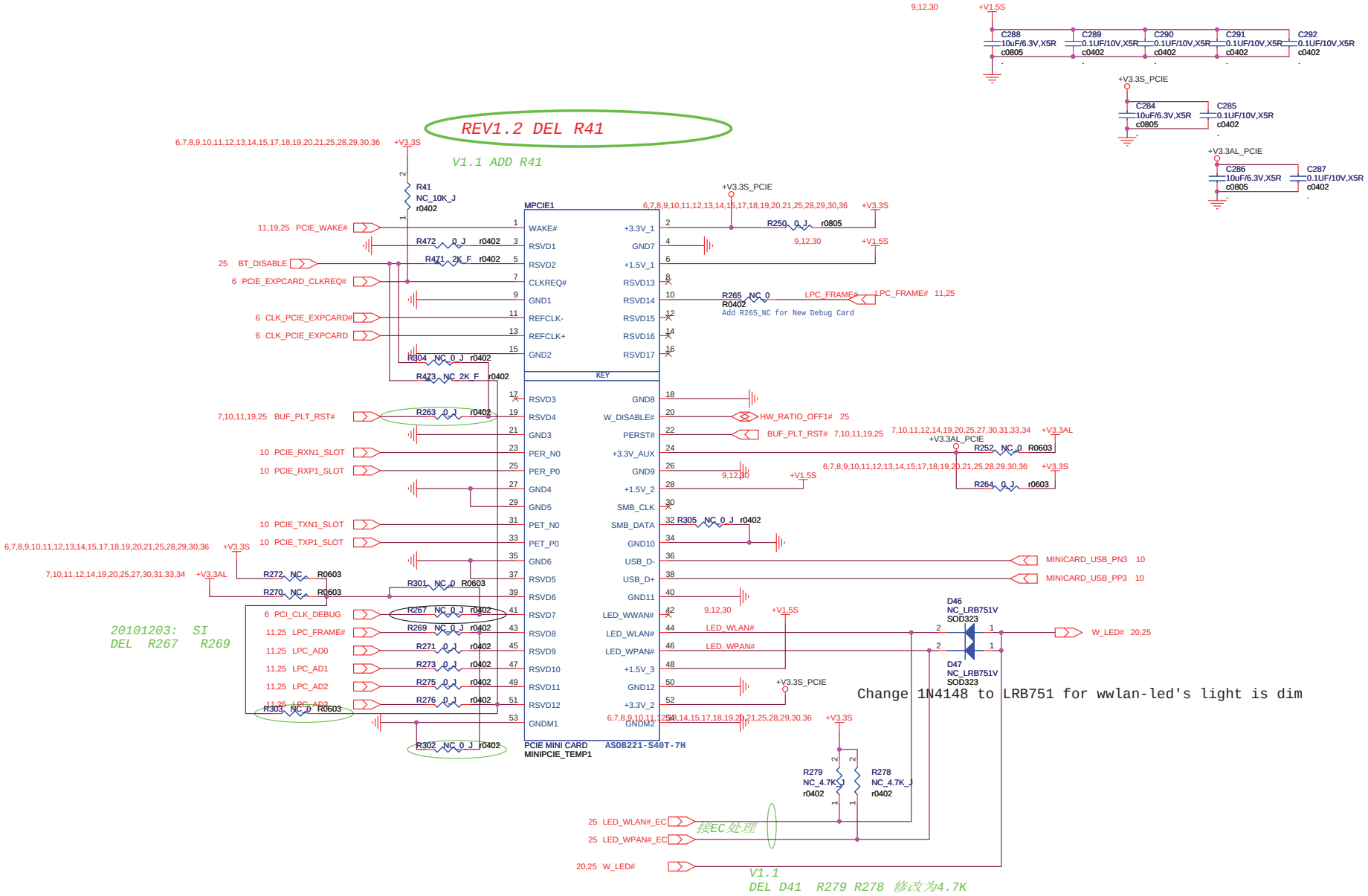

Bitland Information Technology Co.,Ltd. 4-6F,#7Building,Xili Tongfuyu Industrial Town Nanshan District,Shenzhen			
BITC_PN	BM5080	Rev	1.2
TITLE	Netbook	ID	MINI_PCIE_SLOT1
PAGE DETAIL	<Doc>	Date	
Size	Custom	Sheet	22 of 42

			Bitland Information Technology Co.,Ltd. 4-6F,#7Building,Xili Tongfuyu Industrial Town Nanshan District,Shenzhen		
		BITC_PN	BM5080	Rev	1.2
TITLE	Netbook	ID	MINI_PCIE_SLOT2	Size	B
PAGE DETAIL	<Doc>	Date		Sheet	23 of 42

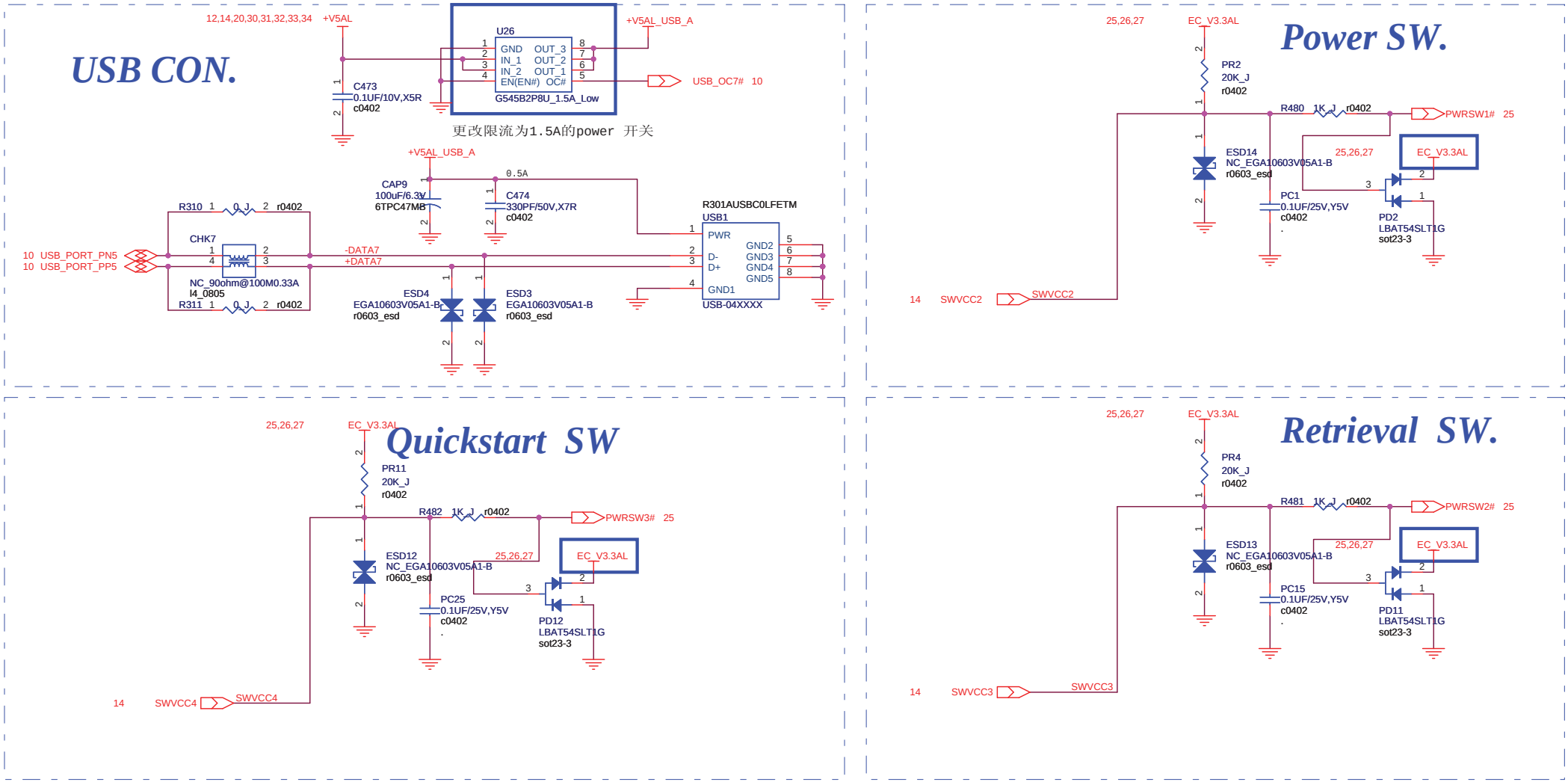

Bitland Information Technology Co.,Ltd.
4-6F,#7Building,Xili Tongfuyu Industrial Town Nanshan District,Shenzhen

		BITC_PN	BM5080	Rev	1.2
TITLE	Netbook	ID	USB,LID,BWRBTN	Size	B
PAGE DETAIL	<Doc>	Date		Sheet	24 of 42

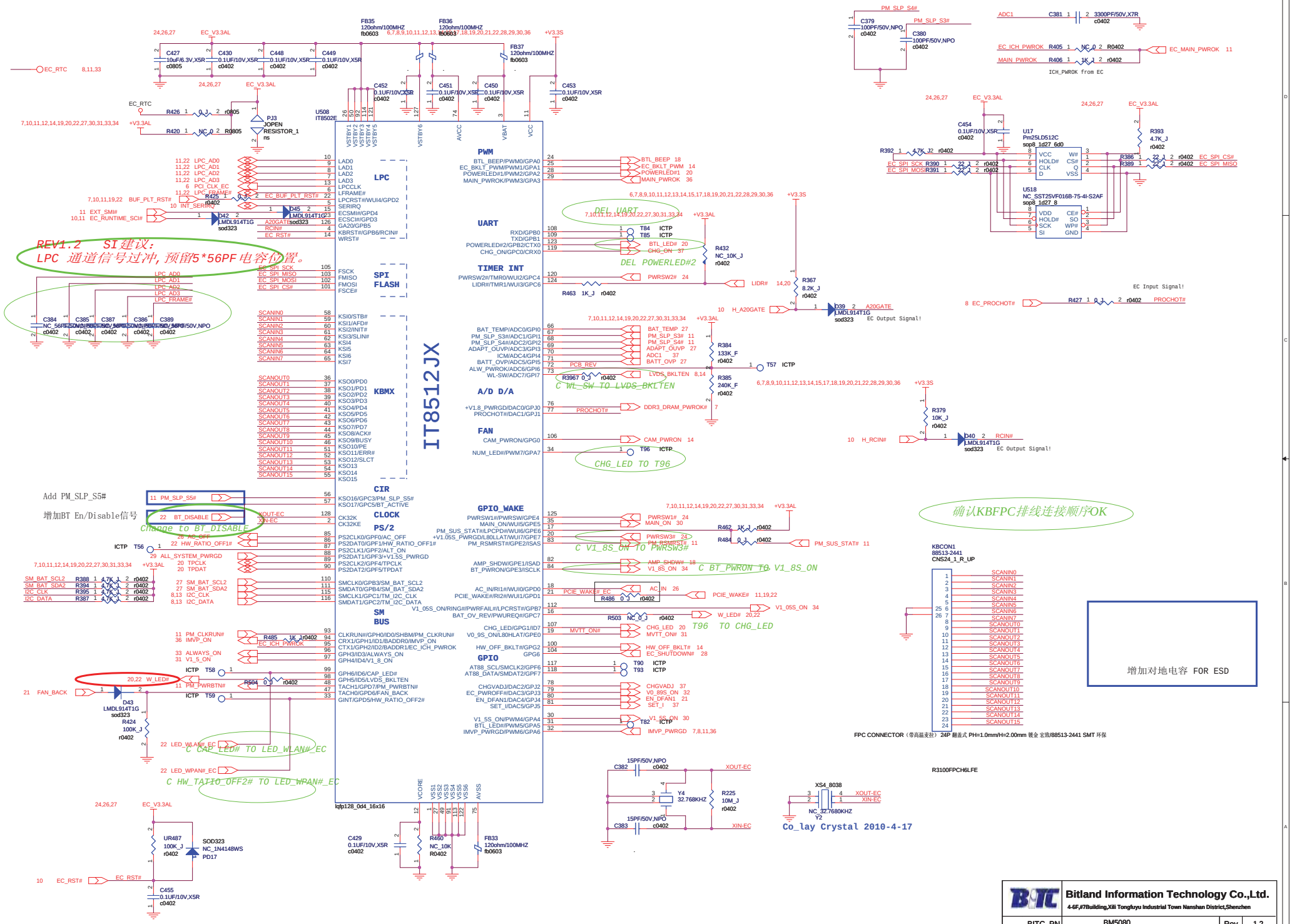
IT8512JX
U508
IT8502E
LPC
SPI FLASH
KBMX
CIR
CLOCK
PS/2
SM BUS
PWM
UART
TIMER INT
A/D D/A
FAN
GPIO_WAKE
GPIO
REV1.2 SI建议:
LPC 通道信号过冲,预留5*56PF电容位置。
DEL UART
DEL POWERLED#2
C WL_SW TO LVDS_BKLTEN
CHG_LED TO T96
Add PM_SLP_S5#
增加BT En/Disable信号
Change to BT_DISABLE
C V1_8S_ON TO PWRSW#
C BT_PWRON TO V1_8S_ON
T96 TO CHG_LED
C CAP LED# TO LED_WLAN#_EC
C HW_TATIO_OFF2# TO LED_WPAN#_EC
确认KBFPC排线连接顺序OK
增加对地电容 FOR ESD
U17
Pm25LD512C
sop8_1d27_6d0
U518
NC_SST25VF016B-75-4I-S2AF
sop8_1d27_8
KBCON1
88513-2441
CNS24_1_R_UP
FPC CONNECTOR（带高温麦拉）24P 翻盖式 PH=1.0mm/H=2.00mm 镀金 宏致/88513-2441 SMT 环保
R3100FPCH6LFE
Co_lay Crystal 2010-4-17
Bitland Information Technology Co.,Ltd.
4-6F,#7Building,Xili Tongfuyu Industrial Town Nanshan District,Shenzhen
BITC_PN
BM5080
Rev
1.2
TITLE
Netbook
PAGE DETAIL
ID
EC
Size
C
Date
Sheet
25 of 42

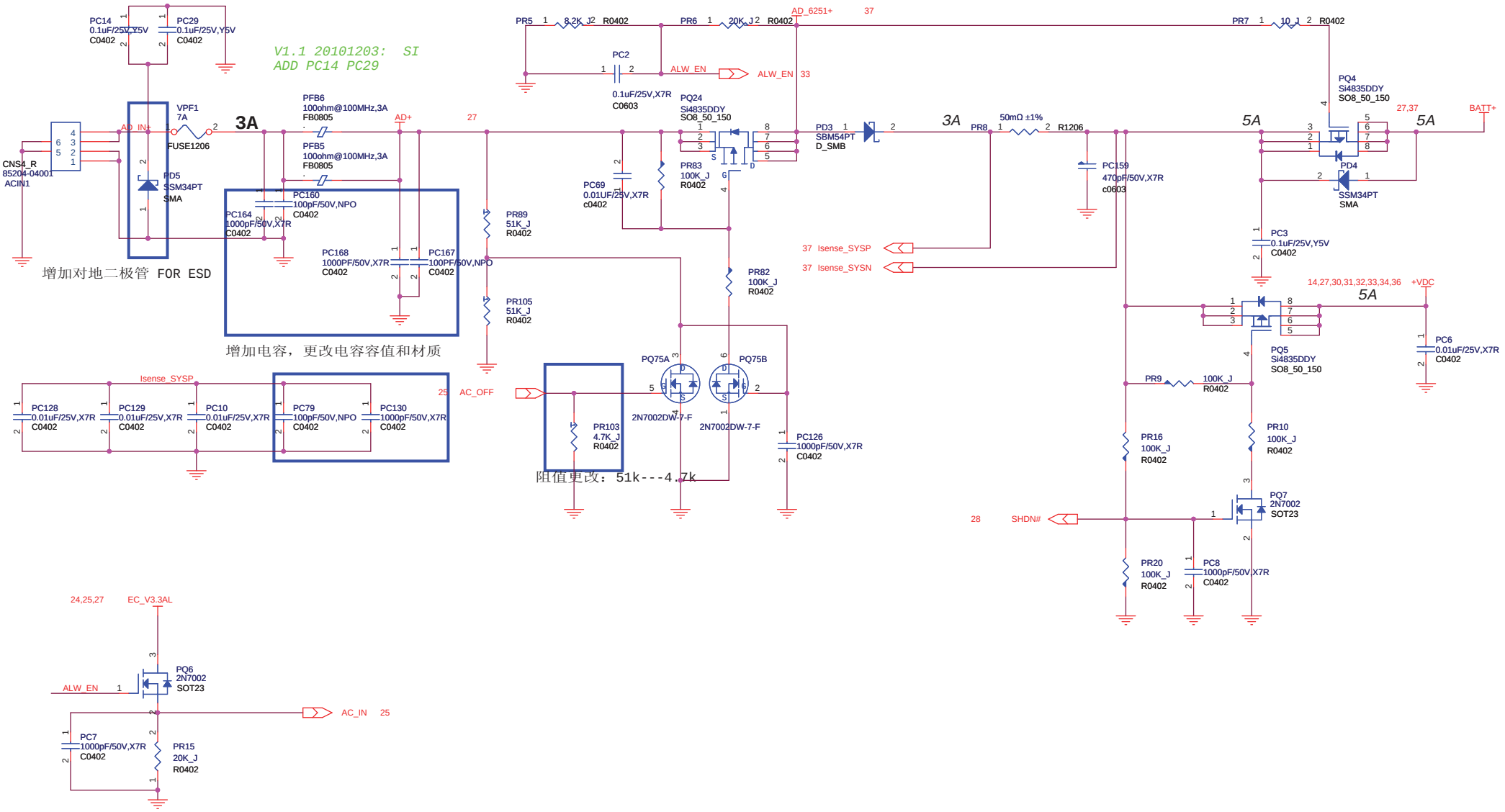

Bitland Information Technology Co.,Ltd. 4-6F,#7Building,Xili Tongfuyu Industrial Town Nanshan District,Shenzhen			
BITC_PN	BM5080	Rev	1.2
TITLE	Netbook	ID	ADAPTER
Size	A3		
PAGE DETAIL	<Doc>	Date	
Sheet	26 of 42		

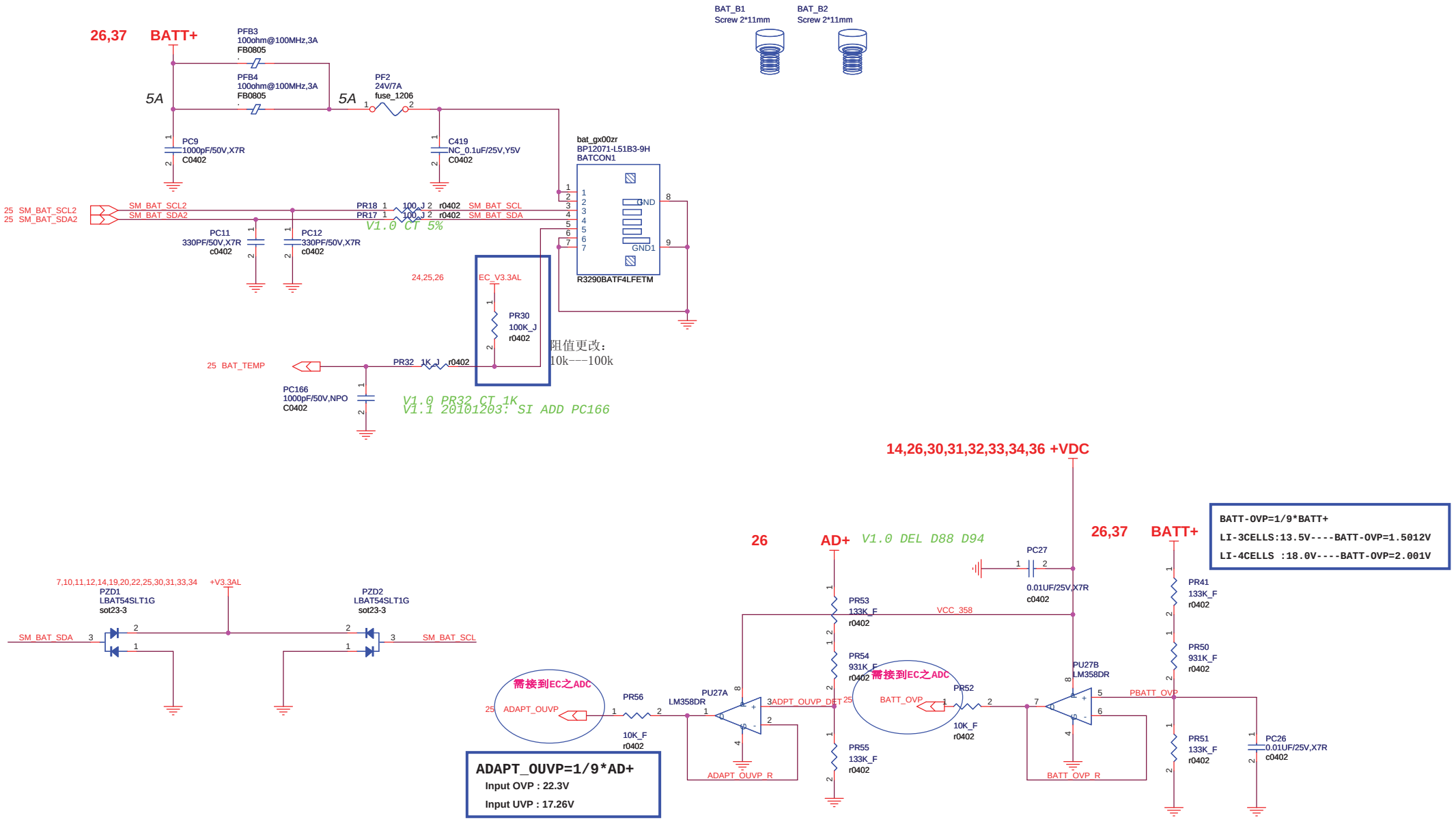

		Bitland Information Technology Co.,Ltd. 4-6F,#7Building,Xili Tongfuyu Industrial Town Nanshan District,Shenzhen			
		BITC_PN	BM5080	Rev	1.2
TITLE	Netbook	ID	BATTERY	Size	A3
PAGE DETAIL	<Doc>	Date		Sheet	27 of 42

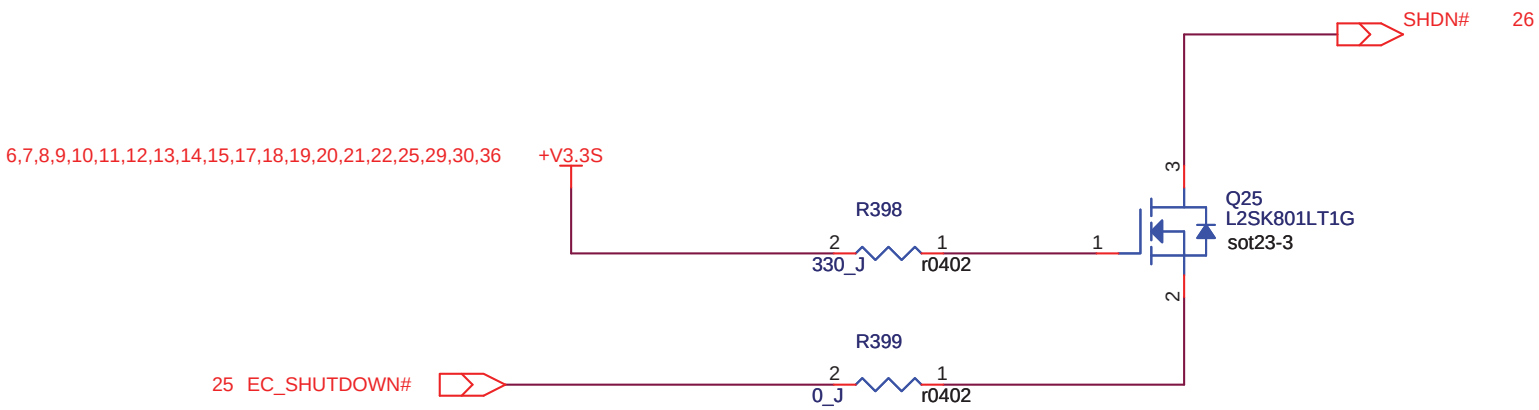

		Bitland Information Technology Co.,Ltd. 4-6F,#7Building,Xili Tongfuyu Industrial Town Nanshan District,Shenzhen			
		BITC_PN	BM5080	Rev	1.2
TITLE	Netbook	ID	THERMAL PROTECT	Size	A
PAGE DETAIL	<Doc>	Date		Sheet	28 of 42

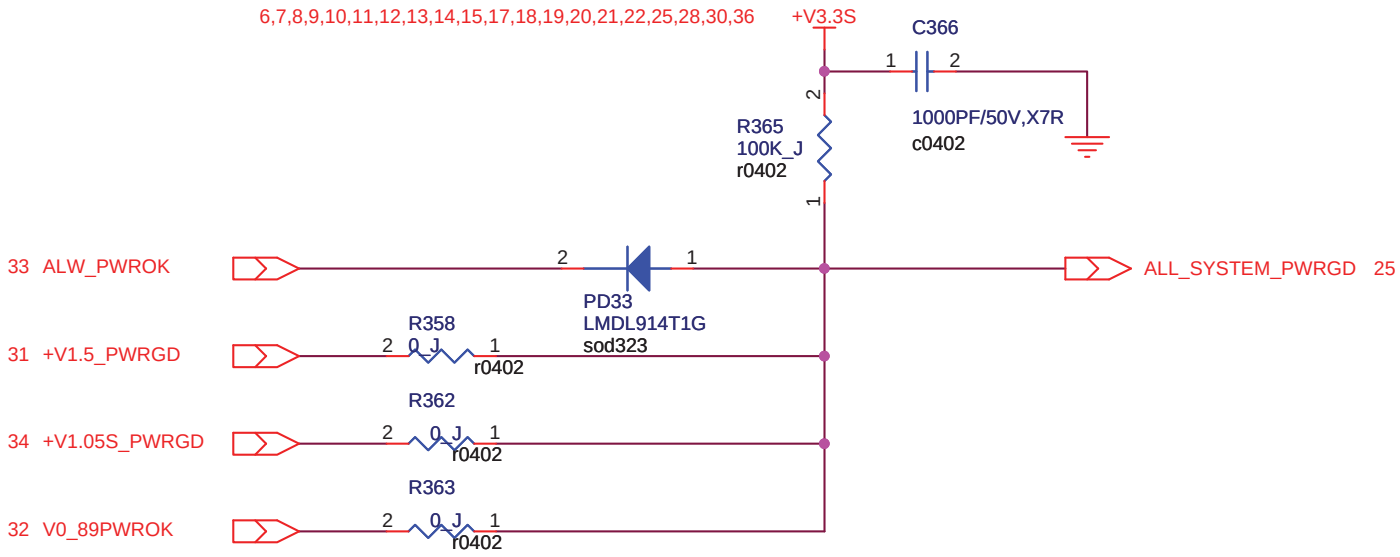

		Bitland Information Technology Co.,Ltd. 4-6F,#7Building,Xili Tongfuyu Industrial Town Nanshan District,Shenzhen			
		BITC_PN	BM5080	Rev	1.2
TITLE	Netbook	ID	POWER OVP	Size	A
PAGE DETAIL	<Doc>	Date		Sheet	29 of 42

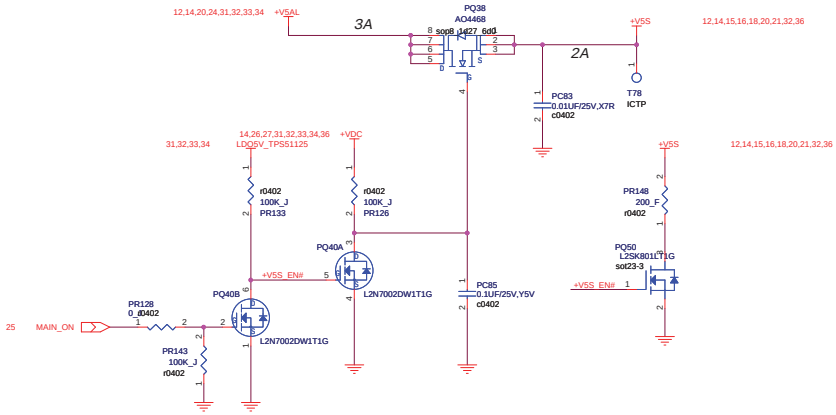

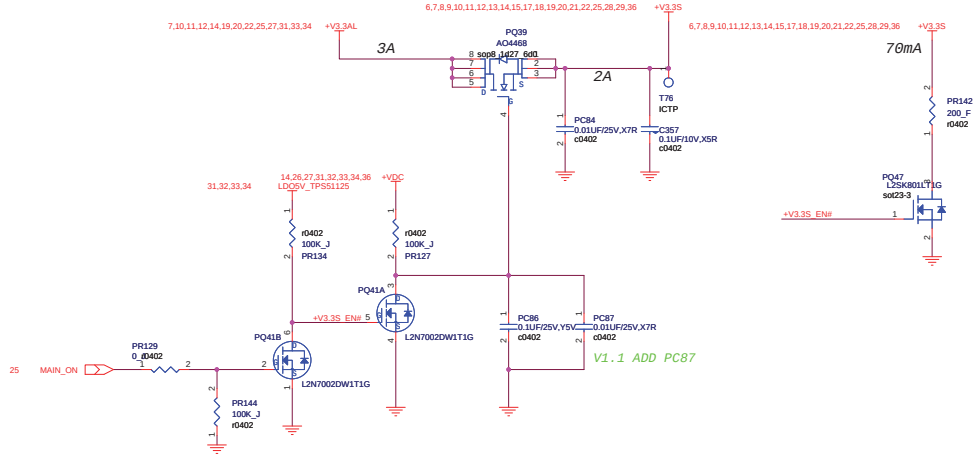

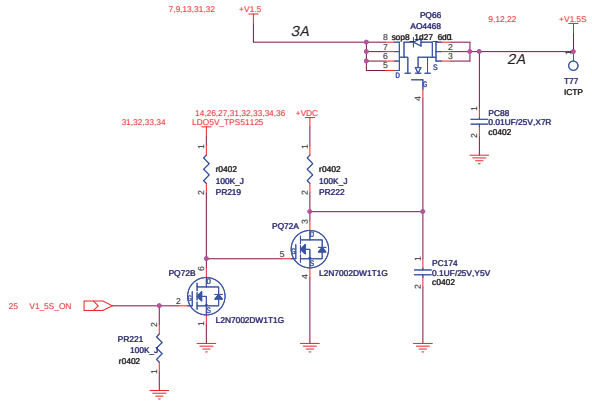

		Bitland Information Technology Co.,Ltd. 4-6F,#7Building,Xili Tongfuyu Industrial Town Nanshan District,Shenzhen			
		BITC_PN	BM5080	Rev	1.2
TITLE	Netbook	ID	POWER CONTROL	Size	A2
PAGE DETAIL	<Doc>	Date		Sheet	30 of 42

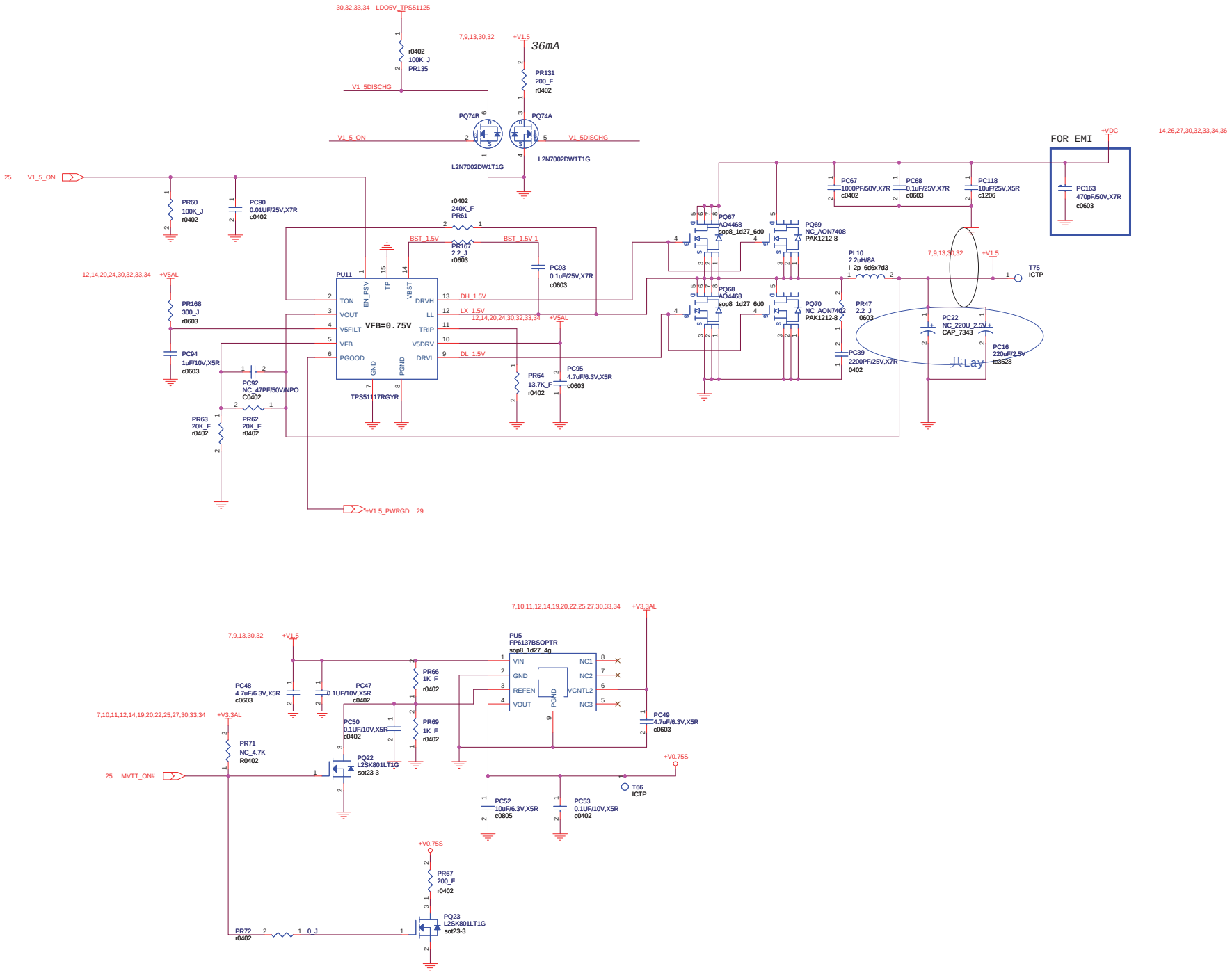

Bitland Information Technology Co.,Ltd. 4-6F,#7Building,Xili Tongfuyu Industrial Town Nanshan District,Shenzhen			
BITC_PN	BM5080	Rev	1.2
	DDR POWER	Size	C
		Sheet	31 of 42

TITLE	Netbook	ID	
PAGE DETAIL	<Doc>	Date	

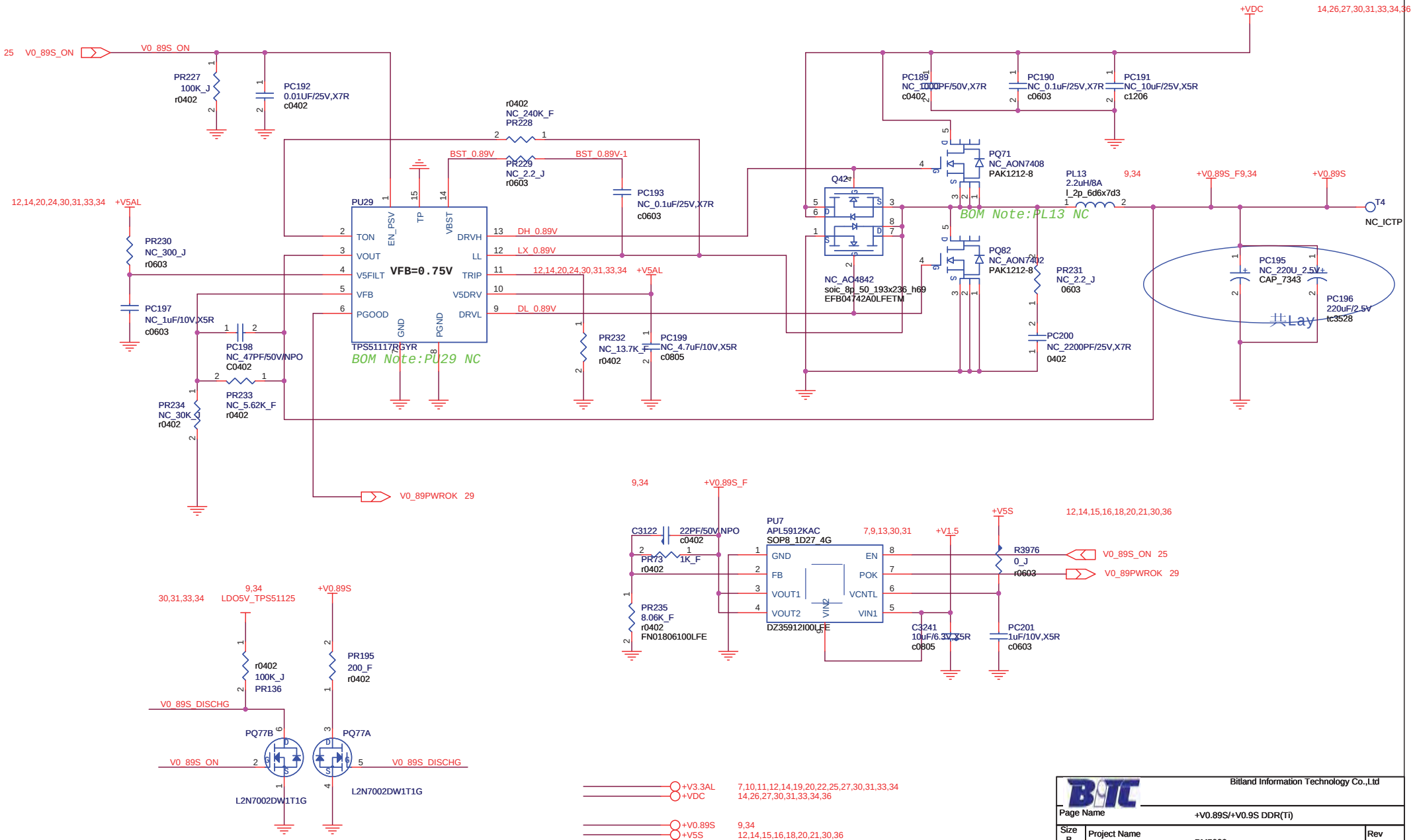

Bitland Information Technology Co.,Ltd		
Page Name	+V0.89S/+V0.9S DDR(Ti)	
Size B	Project Name BM5080	Rev 1.2
Date:	Sheet 32 of 42	

PROPERTY NOTE: this document contains information confidential and property to Bitland Technology Co.,Ltd. and shall not be reproduced or transferred to other documents or disclosed to others or used for any purpose other than that for which it was obtained with the expressed written consent of Bitland

参数设定：Vo1=5.01V ;Vo2=3.3V

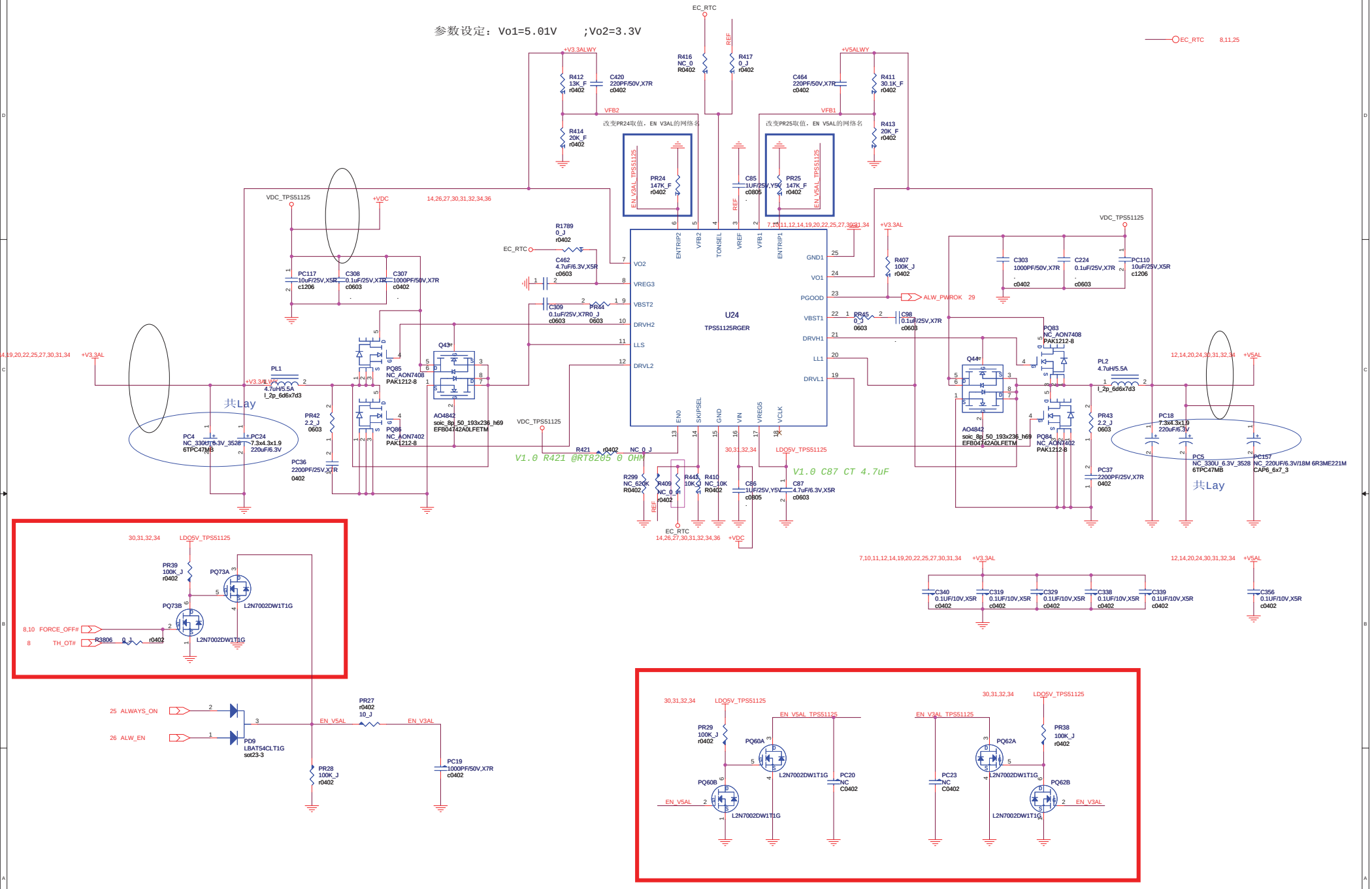

BITC_PN	BM5080	Rev	1.2
ID	V5AL V3.3AL	Size	C
Date		Sheet	33 of 42

Bitland Information Technology Co.,Ltd.
4-6F,#7Building,Xili Tongfuyu Industrial Town Nanshan District,Shenzhen

TITLE	Netbook
PAGE DETAIL	<Doc>

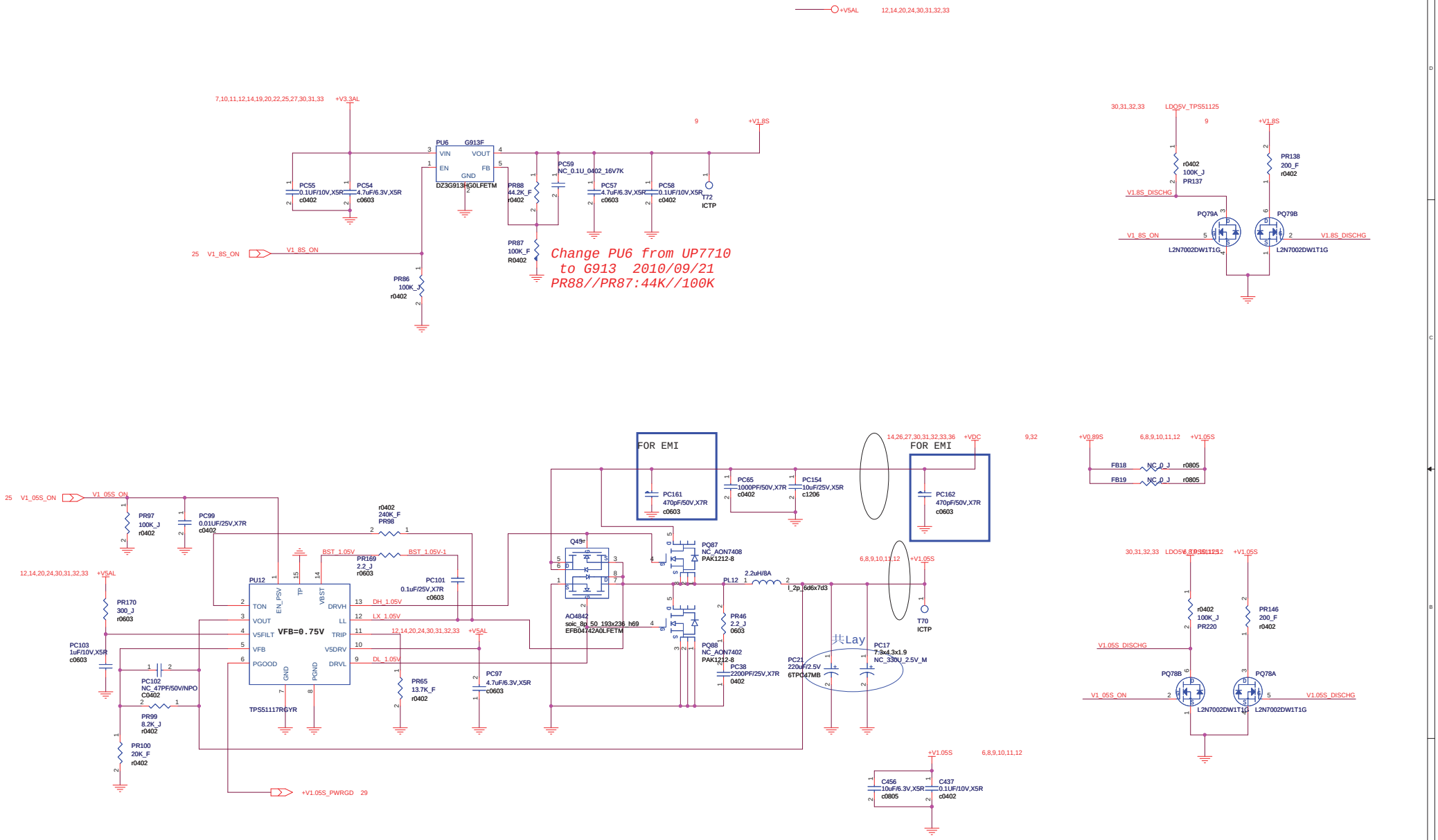

Bitland Information Technology Co.,Ltd. 4-6F,#7Building,Xili Tongfuyu Industrial Town Nanshan District,Shenzhen			
BITC_PN	BM5080	Rev	1.2
		Size	C
		Sheet	34 of 42

TITLE	Netbook
PAGE DETAIL	<Doc>
ID	V1.5S V1.05S
Date	

		Bitland Information Technology Co.,Ltd. 4-6F,#7Building,Xili Tongfuyu Industrial Town Nanshan District,Shenzhen			
		BITC_PN	BM5080	Rev	1.2
TITLE	Netbook	ID	V2.5S	Size	A4
PAGE DETAIL	<Doc>	Date		Sheet	35 of 42

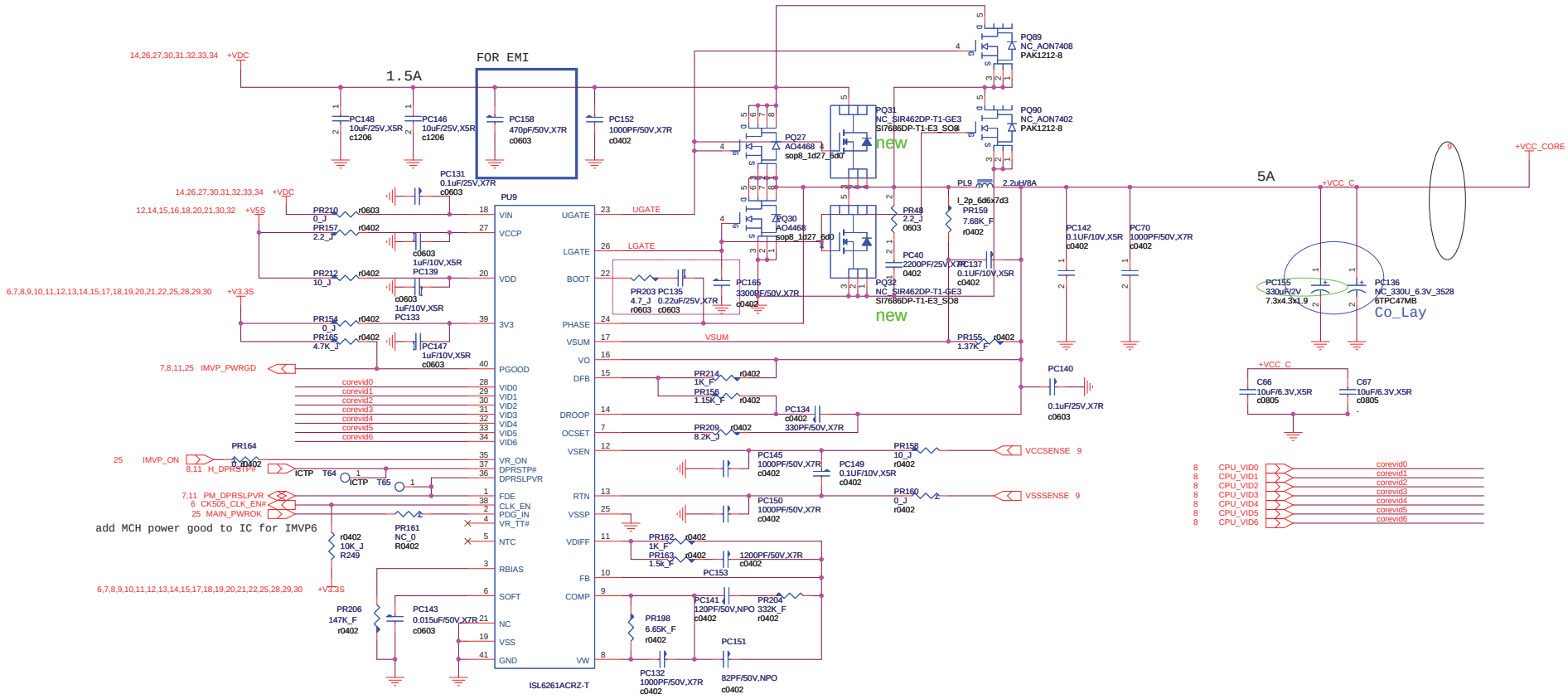

		Bitland Information Technology Co.,Ltd. 4-6F,#7Building,Xili Tongfuyu Industrial Town Nanshan District,Shenzhen			
		BITC_PN	BM5080	Rev	1.2
TITLE	Netbook	ID	CPU VCORE	Size	Custom
PAGE DETAIL	<Doc>	Date		Sheet	36 of 42

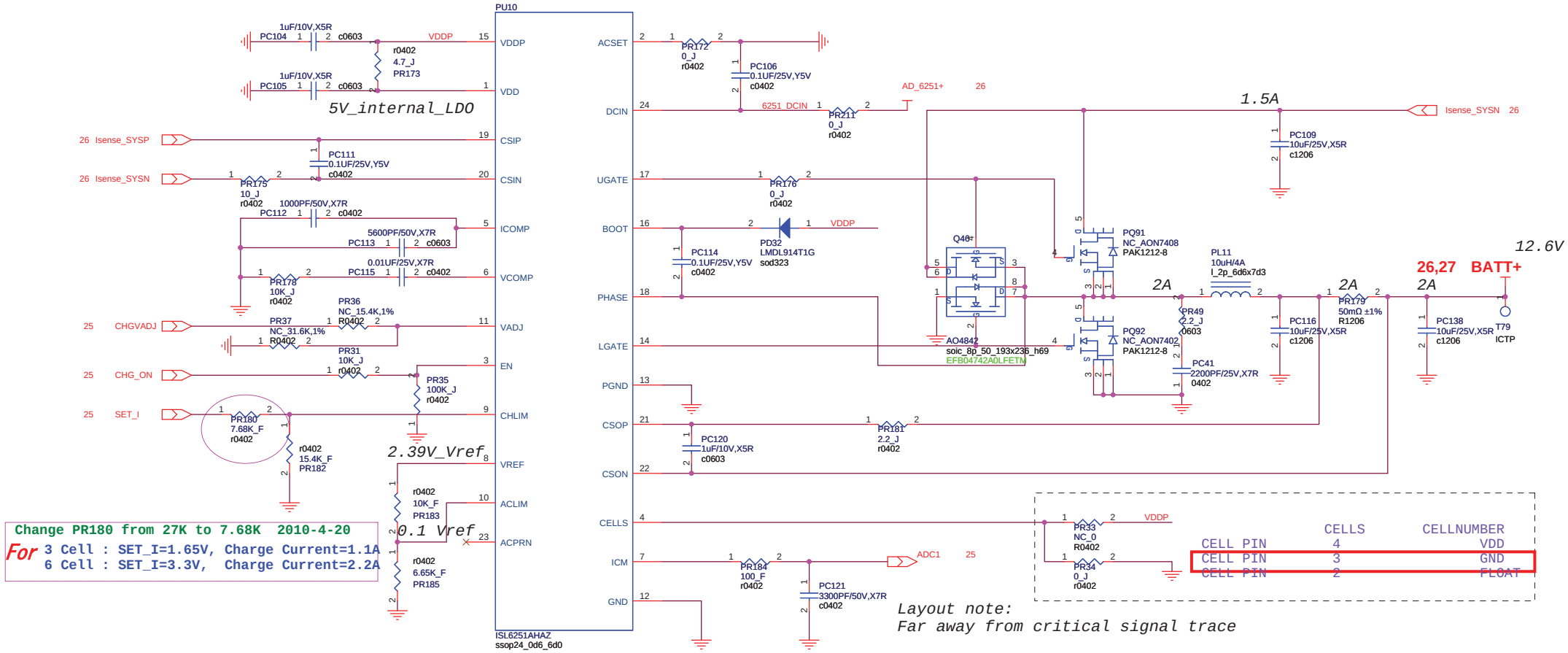

设置适配器限流值为
50mV/25m ohm=2.0A.

Iaclim=1/PR8*(0.05*Vaclim/Vref+0.05)

SET_I	充电电流
0V	0A
0.66V	400mA
3.3V	2A

ICHG=165mV/PR179*(VCHLIM/3.3V)

		Bitland Information Technology Co.,Ltd. 4-6F,#7Building,XIII Tongfuyu Industrial Town Nanshan District,Shenzhen			
		BITC_PN	BM5080	Rev	1.2
TITLE	Netbook	ID	CHARGER	Size	A3
PAGE DETAIL	<Doc>	Date		Sheet	37 of 42

20101022_____V1.0
20101126_____V1.1
1. Page6 ADD R3773 R3774 R3772
2. Page11 ADD R42
3. Page14 DEL Q9 R155 R156 PC172
4. Page18 ADD D99
5. Page18 Modify Codec Combo Jack circuit
6. Page 22 ADD R41
7. Page 28 ADD PC87
8. Page14 移动 C346 D48到LVDS CN附近
20110124_____V1.2
1. Page 6 R3766 CT 10 OHM.
   Page 6 DEL R3772 R3774
2. Page14 Del C347 D49
3. Page17 change R11‘Footprint from 0603 to 0402 。
4. DEL ALL Power Jumpers
5. Page25 LPC 通道上预留56PF电容位置
6. Page19 DEL R477 R478 R479
   增加 C38 位置0603 0 OHM电阻
   增加 LD1
7. Page11 DEL R42
8. Page22 DEL R41

		Bitland Information Technology Co.,Ltd. 4-6F,#7Building,Xili Tongfuyu Industrial Town Nanshan District,Shenzhen			
		BITC_PN	BM5080	Rev	1.2
TITLE	Netbook	ID	History	Size	B
PAGE DETAIL	<Doc>	Date		Sheet	38 of 42

BM5XXX Power On/Off Sequence Specification(Adapter Mode)

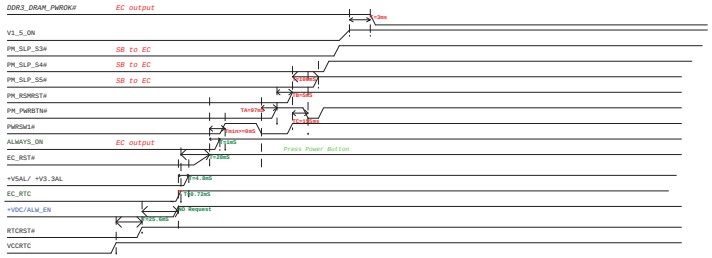

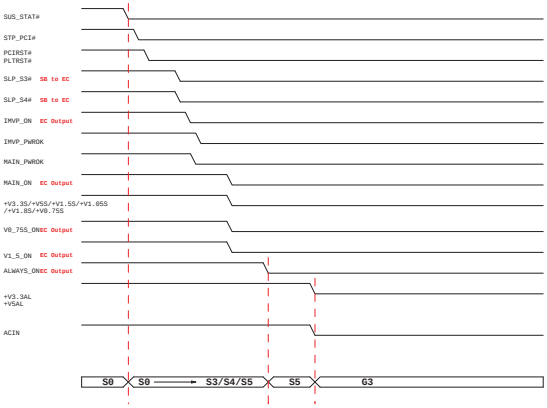

Billand Information Technology Co.,Ltd. 14F,4Building,Sill FengHuo Industrial Town NanShan District,Shenzhen			
BITC_PN	BM5080	Rev	1.2
ID	Power On/Off Sequence	Size	Custom
Date		Sheet	36 of 45
TITLE	Notebook		
PAGE DETAIL	<Doc>		

BM5XXX Power On/Off Sequence Specification(Battery Mode)

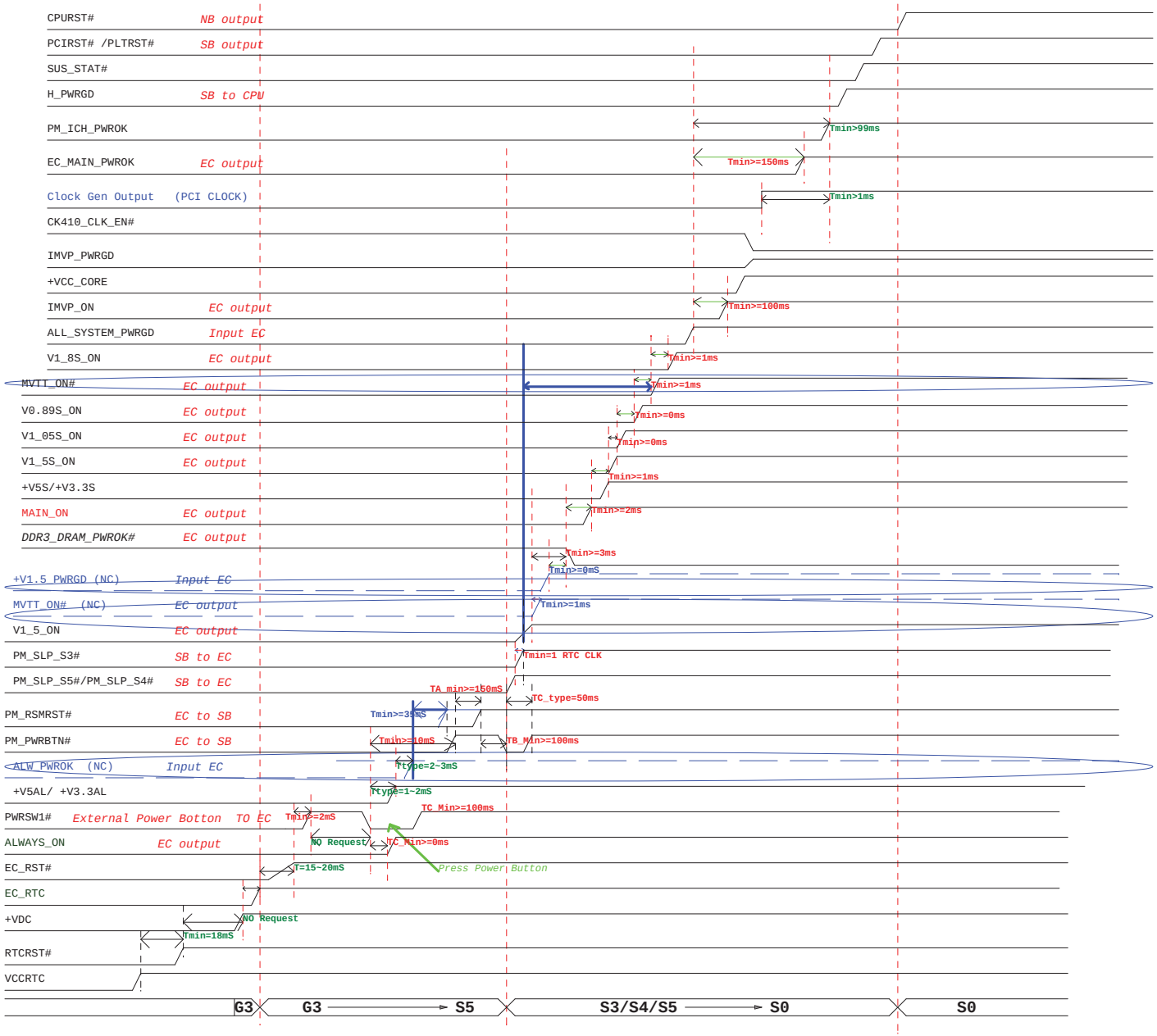

Bitland Information Technology Co.,Ltd. 4-6F,#7Building,Xili Tongfuyu Industrial Town Nanshan District,Shenzhen			
BITC_PN	BM5080	Rev	1.2
TITLE	Netbook	ID	Power On/Off Sequerce2
PAGE DETAIL	<Doc>	Date	
Size	C	Sheet	40 of 42

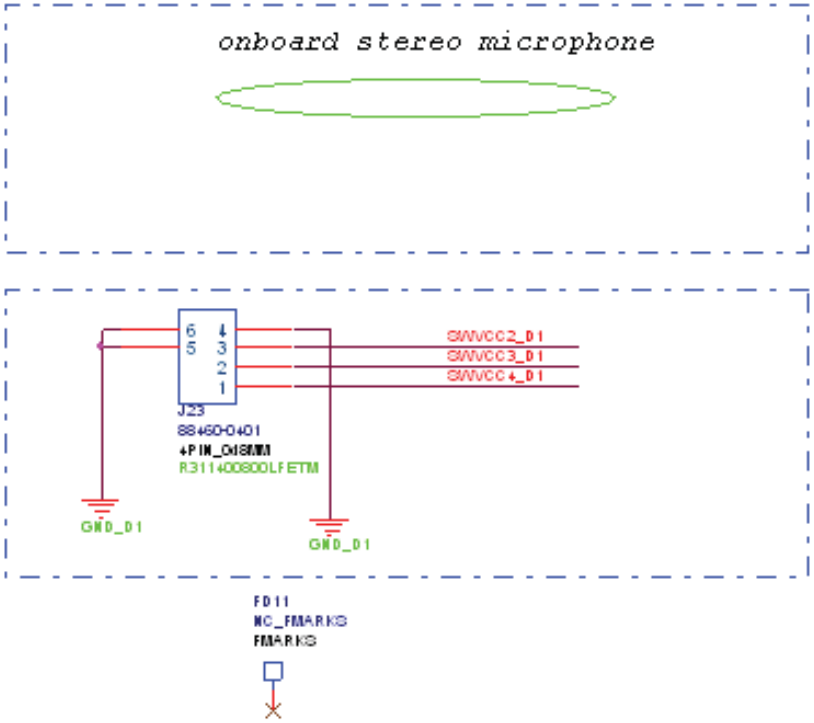

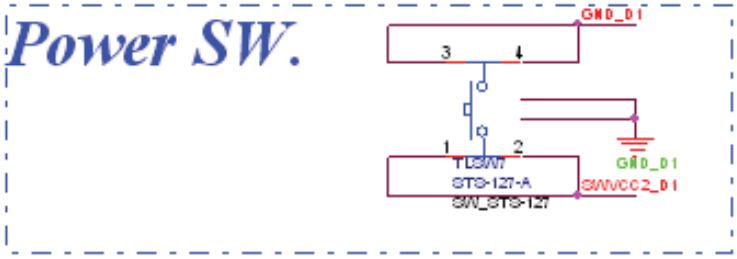

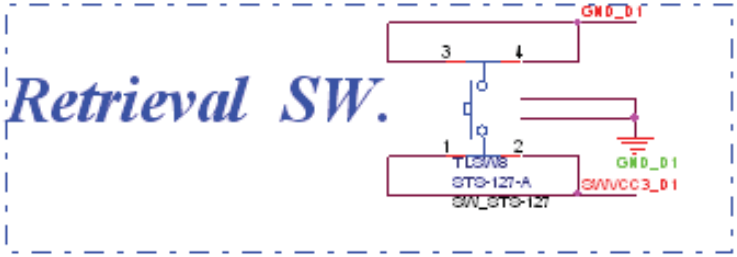

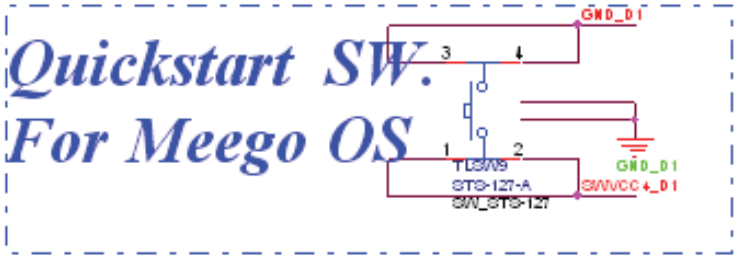

Power Switch DB

		Bitland Information Technology Co.,Ltd. 4-6F,#7Building,Xili Tongfuyu Industrial Town Nanshan District,Shenzhen			
		BITC_PN	BM5080	Rev	1.2
TITLE	Netbook	ID	DB LED/MIC	Size	A
PAGE DETAIL	<Doc>	Date		Sheet	41 of 42

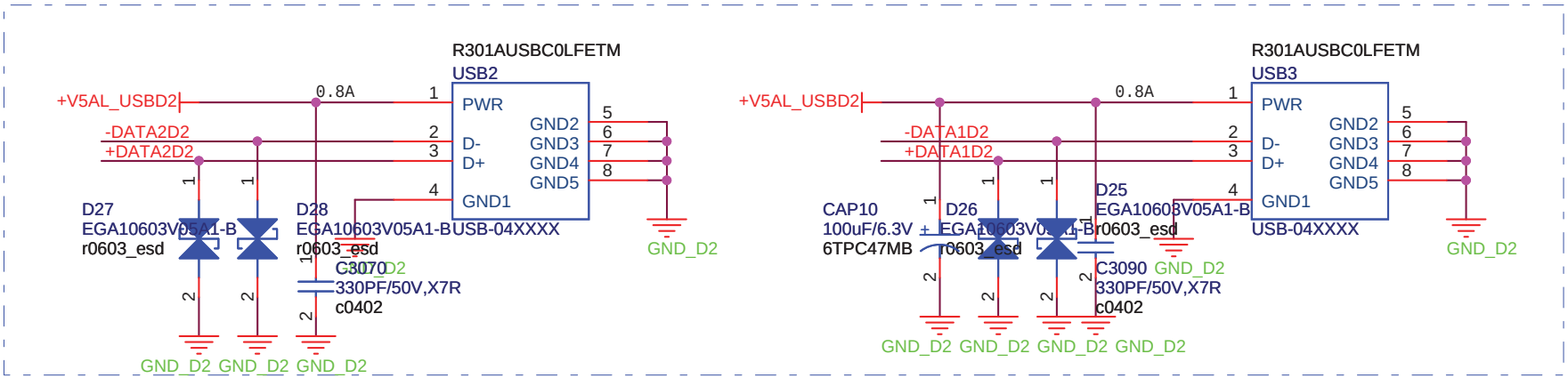

确认异面FPC排线连接J1顺序OK

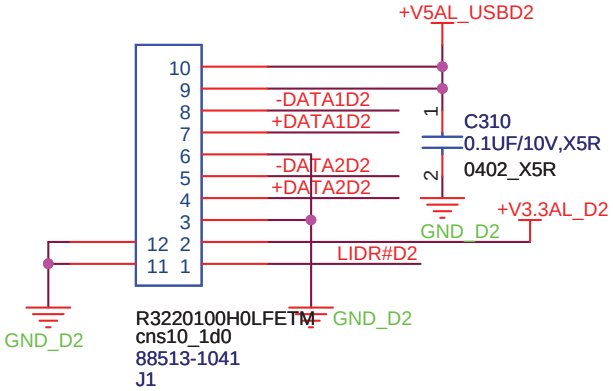

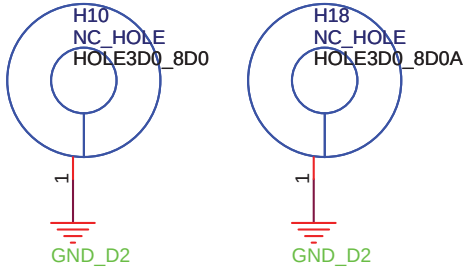

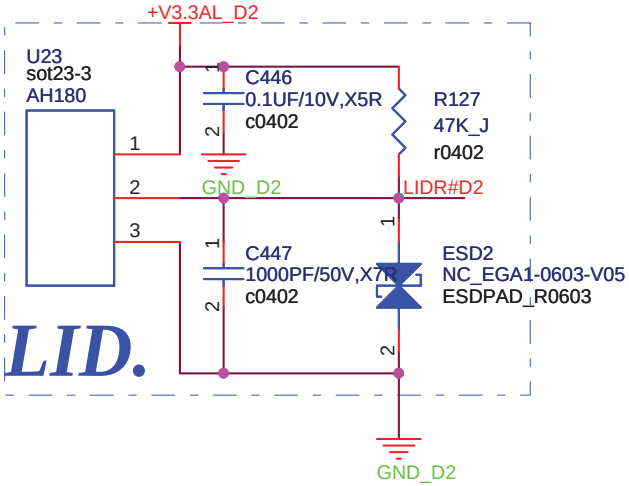

USB/LID DB

		Bitland Information Technology Co.,Ltd. 4-6F,#7Building,Xili Tongfuyu Industrial Town Nanshan District,Shenzhen			
		BITC_PN	BM5080	Rev	1.2
TITLE	Netbook	ID	DB USB/WL-SW	Size	A
PAGE DETAIL	<Doc>	Date		Sheet	42 of 42