LE1N

PCI DEVICES	IDSEL #	REQ/GNT #	INT
MINI-PCI	AD22	0	B,C
Card bus	AD17	1	D
Video bridge	N/A	N/A	A
VGA	N/A	N/A	A

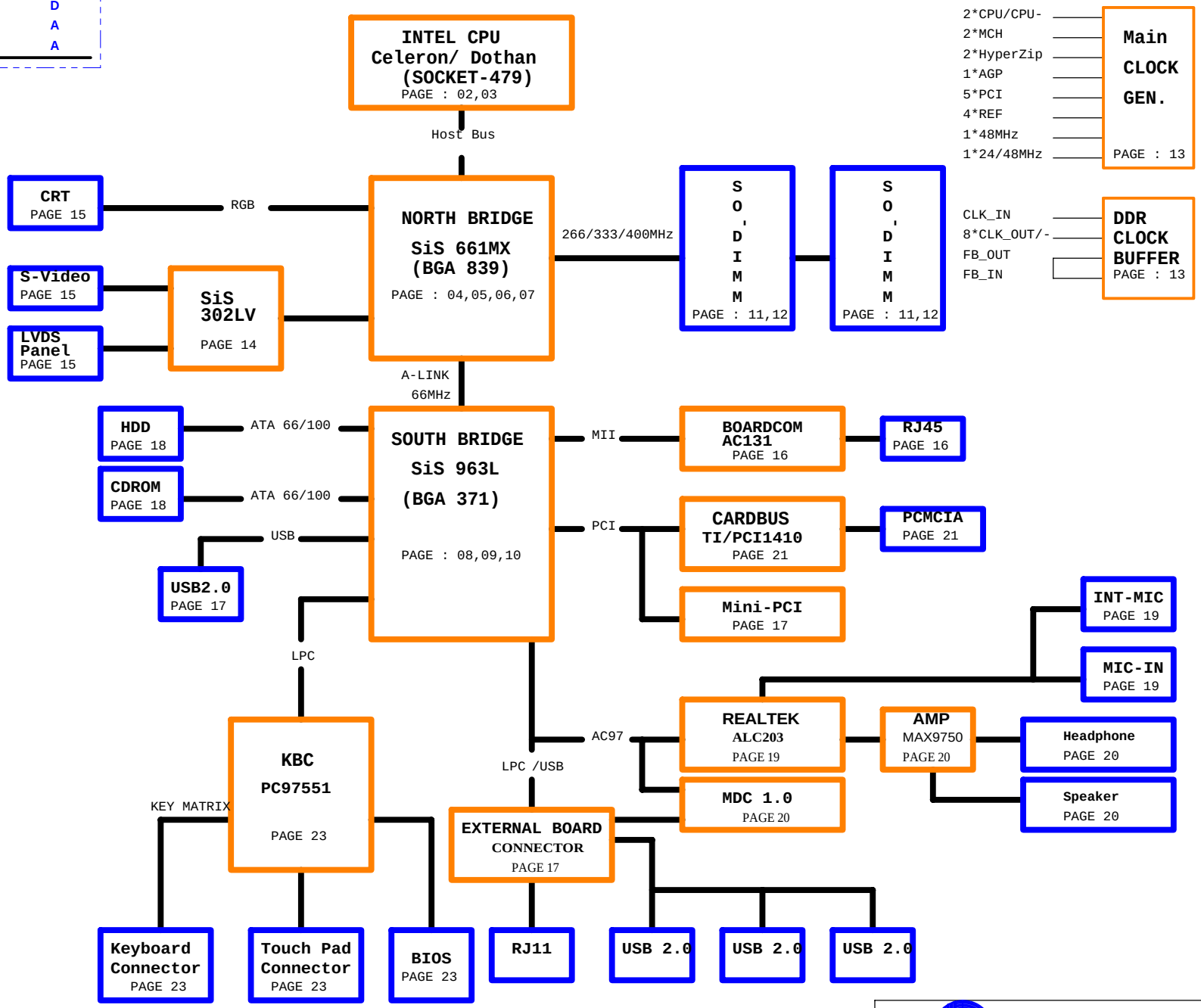

PROJECT : LE1N
Quanta Computer Inc.

Size	Document Number	Rev
Custom	BLOCK DIAGRAM	1A

Date: Thursday, October 13, 2005 Sheet 1 of 27

0502 U41 CHANGE COMPONENT

U41A

Banias

1 OF 3

4 HA#[3..31] — HA#[3..31]

HA#3	P4	A3#	REQUEST PHASE SIGNALS
HA#4	U4	A4#	
HA#5	V3	A5#	
HA#6	R3	A6#	
HA#7	V2	A7#	
HA#8	W1	A8#	
HA#9	T4	A9#	
HA#10	W2	A10#	
HA#11	Y4	A11#	
HA#12	Y1	A12#	
HA#13	U1	A13#	
HA#14	AA3	A14#	
HA#15	Y3	A15#	
HA#16	AA2	A16#	
HA#17	AF4	A17#	
HA#18	AC4	A18#	
HA#19	AC7	A19#	
HA#20	AC3	A20#	
HA#21	AD3	A21#	
HA#22	AE4	A22#	
HA#23	AD2	A23#	
HA#24	AB4	A24#	
HA#25	AC6	A25#	
HA#26	AD5	A26#	
HA#27	AE2	A27#	
HA#28	AD6	A28#	
HA#29	AE3	A29#	
HA#30	AE1	A30#	
HA#31	AF1	A31#	

HD#[0..63] — HD#[0..63] 4

D0#	A19	HD#0	DATA PHASE SIGNALS
D1#	A25	HD#1	
D2#	A22	HD#2	
D3#	B21	HD#3	
D4#	A24	HD#4	
D5#	B26	HD#5	
D6#	A21	HD#6	
D7#	B20	HD#7	
D8#	C20	HD#8	
D9#	B24	HD#9	
D10#	D24	HD#10	
D11#	E24	HD#11	
D12#	C26	HD#12	
D13#	B23	HD#13	
D14#	E23	HD#14	
D15#	C25	HD#15	
D16#	H23	HD#16	
D17#	G25	HD#17	
D18#	L23	HD#18	
D19#	M26	HD#19	
D20#	H24	HD#20	
D21#	F25	HD#21	
D22#	G24	HD#22	
D23#	J23	HD#23	
D24#	M23	HD#24	
D25#	J25	HD#25	
D26#	L26	HD#26	
D27#	N24	HD#27	
D28#	M25	HD#28	
D29#	H26	HD#29	
D30#	N25	HD#30	
D31#	K25	HD#31	
D32#	Y26	HD#32	
D33#	AA24	HD#33	
D34#	T25	HD#34	
D35#	U23	HD#35	
D36#	V23	HD#36	
D37#	R24	HD#37	
D38#	R26	HD#38	
D39#	R23	HD#39	
D40#	AA23	HD#40	
D41#	U26	HD#41	
D42#	V24	HD#42	
D43#	U25	HD#43	
D44#	V26	HD#44	
D45#	Y23	HD#45	
D46#	AA26	HD#46	
D47#	Y25	HD#47	
D48#	AB25	HD#48	
D49#	AC23	HD#49	
D50#	AB24	HD#50	
D51#	AC20	HD#51	
D52#	AC22	HD#52	
D53#	AC25	HD#53	
D54#	AD23	HD#54	
D55#	AE22	HD#55	
D56#	AF23	HD#56	
D57#	AD24	HD#57	
D58#	AF20	HD#58	
D59#	AE21	HD#59	
D60#	AD21	HD#60	
D61#	AF25	HD#61	
D62#	AF22	HD#62	
D63#	AF26	HD#63	

4 HADSTB0#	U3	ADSTB0#	
4 HADSTB1#	AE5	ADSTB1#	
4 HREQ#0	R2	REQ0#	
4 HREQ#1	P3	REQ1#	
4 HREQ#2	T2	REQ2#	
4 HREQ#3	P1	REQ3#	
4 HREQ#4	T1	REQ4#	
4 ADS#	N2	ADS#	ERROR SIGNALS
VTT — R422 56_4	A4	IERR# (H_IERR#)	
4 HBREQ0#	N4	BREQ0#	ARBITRATION PHASE SIGNALS
4 BPRI#	J3	BPRI#	
4 BNR#	L1	BNR#	
4 HLOCK#	J2	LOCK#	
4 HIT#	K3	HIT#	SNOOP PHASE SIGNALS
4 HITM#	K4	HITM#	
4 DEFER#	L4	DEFER#	
T57 — BPM0#	C8	BPM0#	RESPONSE PHASE SIGNALS
T59 — BPM1#	B8	BPM1#	
T55 — BPM2#	A9	BPM2#	
T53 — BPM3#	C9	BPM3#	
4 HTRDY#	M3	TRDY#	
4 RS#0	H1	RS0#	
4 RS#1	K1	RS1#	
4 RS#2	L2	RS2#	
9 A20M#	C2	A20M#	PC COMPATIBILITY SIGNALS
9 FERR# — FERR#	D3	FERR#	
9 IGNNE#	A3	IGNNE#	
4 CPUPWRGD — CPUPWRGD	E4	PWRGOOD	
9 SMI#	B4	SMI#	
R405 27.4/F 4 — TCK	A13	TCK	DIAGNOSTIC & TEST SIGNALS
VTT — R409 *54.9/F 4 — TDO	A12	TDO	
R398 150 4 — TDI	C12	TDI	
R142 39/F 4 — TMS	C11	TMS	
R401 680 4 — TRST#	B13	TRST#	
T45 — HCLK_ITP	A16	ITP_CLK0	
T46 — HCLK_ITP#	A15	ITP_CLK1	
T50 — PREQ#	B10	PREQ#	
T47 — PRDY#	A10	PRDY#	
+3V — R421 150_4 — DBR#	A7	DBR#	
9 INTR	D1	LINT0	EXECUTION CONTROL SIGNALS
9 NMI	D4	LINT1	
9 STPCLK#	C6	STPCLK#	
9 CPUSLP# — CPUSLP#	A6	SLP#	
9 DPSLP#	B7	DPSLP#	
THERMDA	B18	THERMDA	THERMAL DIODE
THERMDC	A18	THERMDC	
THERMTRIP#	C17	THERMTRIP#	
VTT — R394 56_4 — 9 CPU_PROCHOT#	B17	PROCHOT#	

DSTBN0#	C23	HDSTBN0# 4
DSTBP0#	C22	HDSTBP0# 4
DSTBN1#	K24	HDSTBN1# 4
DSTBP1#	L24	HDSTBP1# 4
DSTBN2#	W25	HDSTBN2# 4
DSTBP2#	W24	HDSTBP2# 4
DSTBN3#	AE24	HDSTBN3# 4
DSTBP3#	AE25	HDSTBP3# 4
DBI0#	D25	HDBI0# 4
DBI1#	J26	HDBI1# 4
DBI2#	T24	HDBI2# 4
DBI3#	AD20	HDBI3# 4
DBSY#	M2	DBSY# 4
DRDY#	H2	DRDY# 4
BCLK1	B14	HCLK_CPU# 13
BCLK0	B15	HCLK_CPU 13
INIT#	B5	CPUINIT# 9
RESET#	B11 — R412 220 4 — VTT	CPURST# 4
DPWR#	C19	DPWR# 4

Banias_Processor

4,5,6,7,8,9,11,13,14,15,17,19,21,22,23,24,25 +3V — +3V

3,4,7,8,26 VTT — VTT

H/W MONITOR

15 MIL

10 mil trace /
10 mil space

+3V — R123 47_6 — 3V_THM — C199 .1U_4

C216 — THERMDC, THERMDA — 2200P_4

+3V — R143 10K_4

U13 MAX6657

1	VCC	-ALT	6 — 6648-ALT#
3	DXN	SMDATA	7 — KBSMDAT
2	DXP	SMCLK	8 — KBSMCLK
4	-OVT	GND	5

+3V — R124 10K_4, R128 10K_4, R136 10K_4

Q20 2N7002: MBDATA — MBDATA 23,27

Q17 2N7002: MBCLK — MBCLK 23,27

0502 Q17, Q20 ADD 2ND SOURCE

0427 ADD R1172 & C1627 FOR BOOT ISSUE

VTT — R1172 100K/F_6 — C1627 .1U_4

VTT — R393 56_4 — THERMTRIP# — R512 33_4 — Q49 PMBS3904 — 1999_SHT# 25

0426 SW1 UNSTAFF

SW1 *TJG-533-S-T/R — 1999_SHT# — 1999_SHT# 25

VTT — R426 330_4	CPUPWRGD	
VTT — R423 56_4	FERR#	
VTT — R885 56_4	A20M#	
R886 56_4	DPSLP#	
R887 56_4	IGNNE#	
R888 56_4	SMI#	
R889 56_4	INTR	
R890 56_4	NMI	
R891 56_4	STPCLK#	
R892 56_4	CPUSLP#	
R893 56_4	HBREQ0#	
R896 56_4	DPWR#	
R894 56_4	PREQ#	
R895 56_4	PRDY#	

PROJECT : LE1N

Quanta Computer Inc.

Size	Document Number	Rev
Custom	CPU (HOST BUS)-1	3B

Date: Thursday, October 13, 2005 Sheet 2 of 27

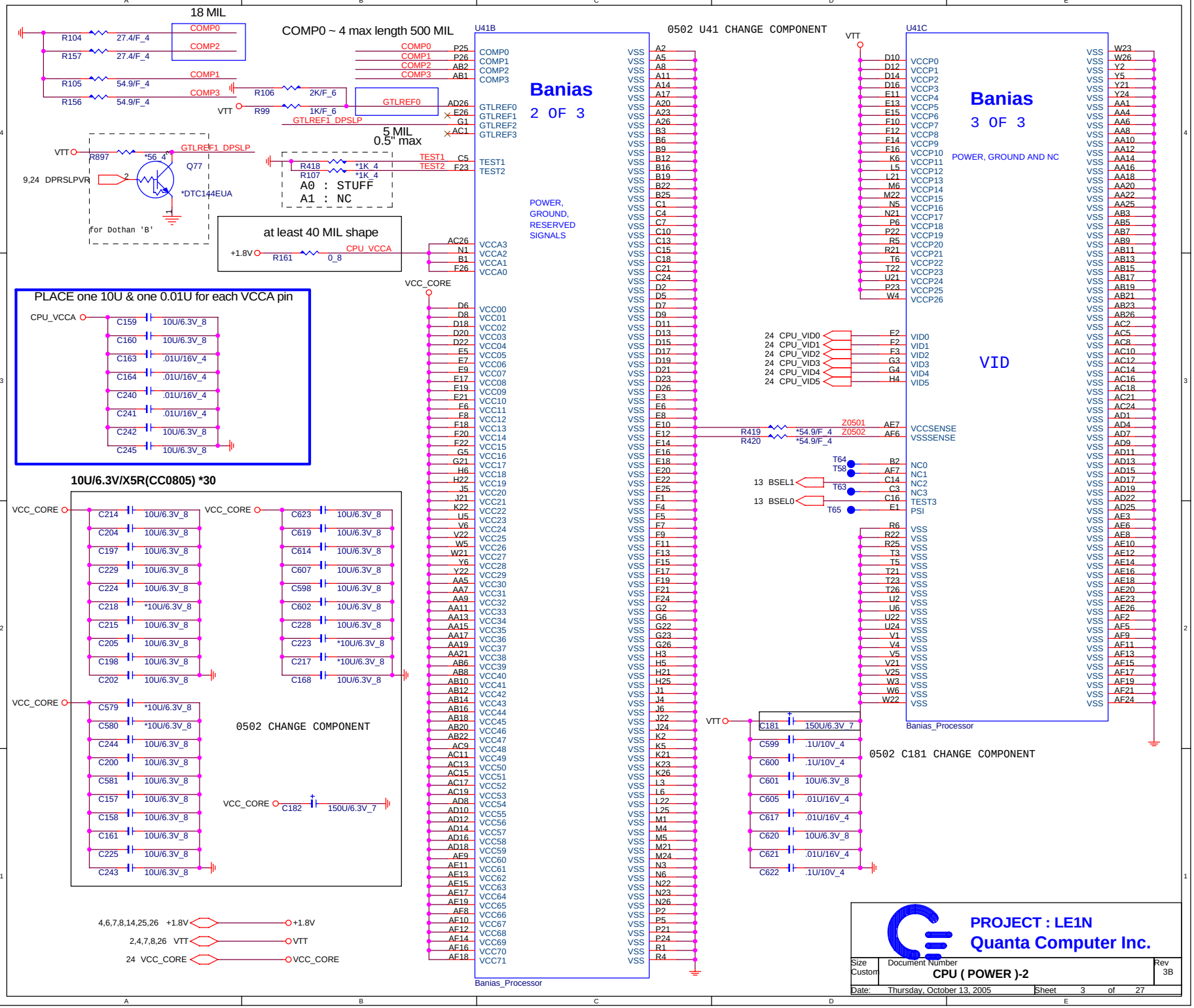
18 MIL
COMP0 ~ 4 max length 500 MIL
0502 U41 CHANGE COMPONENT
U41B
U41C
Banias
2 OF 3
Banias
3 OF 3
POWER, GROUND, RESERVED SIGNALS
POWER, GROUND AND NC
VID
5 MIL
0.5" max
A0 : STUFF
A1 : NC
for Dothan 'B'
at least 40 MIL shape
PLACE one 10U & one 0.01U for each VCCA pin
10U/6.3V/X5R(CC0805) *30
0502 CHANGE COMPONENT
0502 C181 CHANGE COMPONENT
Banias_Processor
PROJECT : LE1N
Quanta Computer Inc.
CPU (POWER)-2
Thursday, October 13, 2005
Sheet 3 of 27

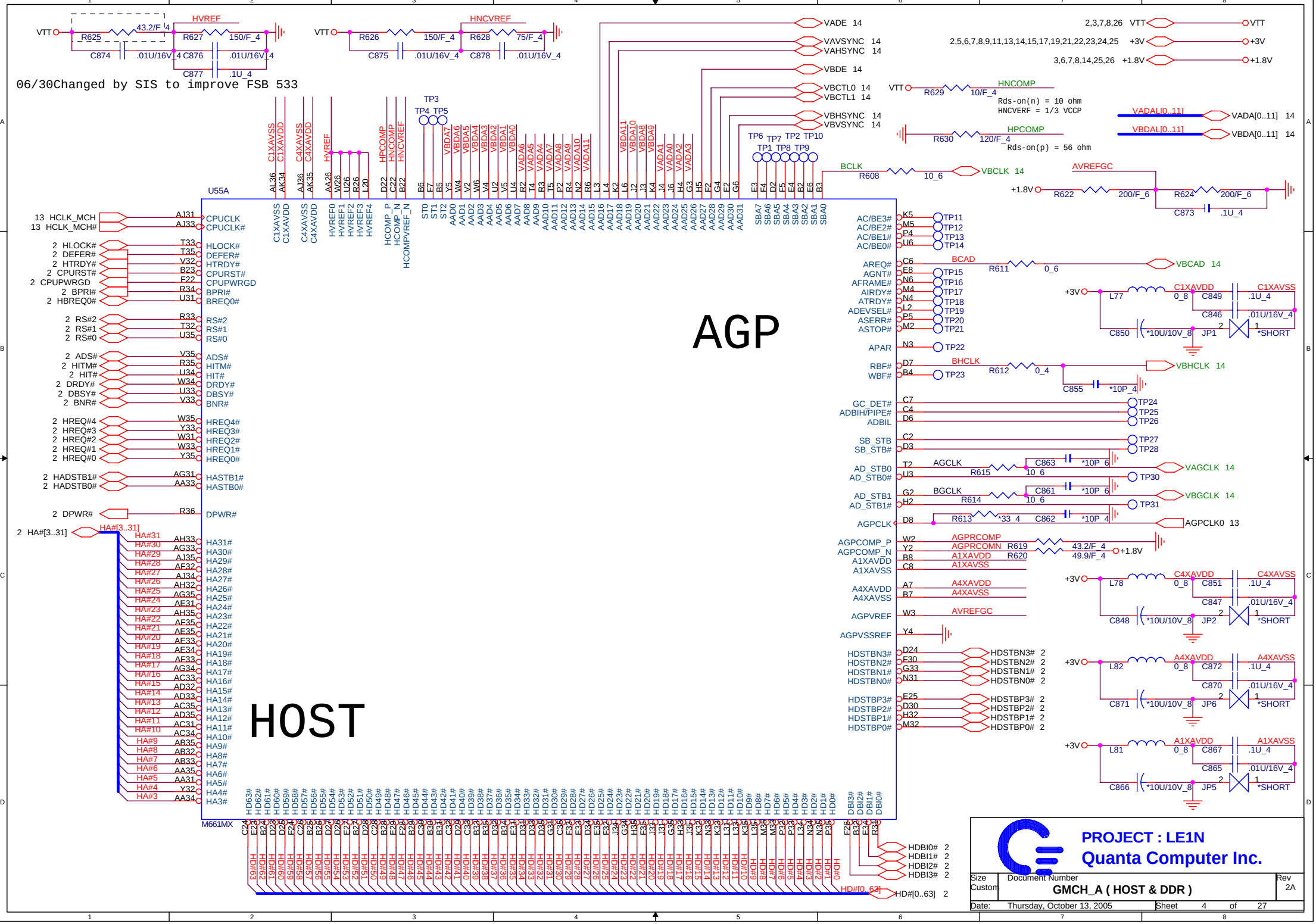
06/30Changed by SIS to improve FSB 533
AGP
HOST
U55A
M661MX
PROJECT : LE1N
Quanta Computer Inc.
GMCH_A (HOST & DDR)
Size Custom
Document Number
Rev 2A
Date: Thursday, October 13, 2005
Sheet 4 of 27

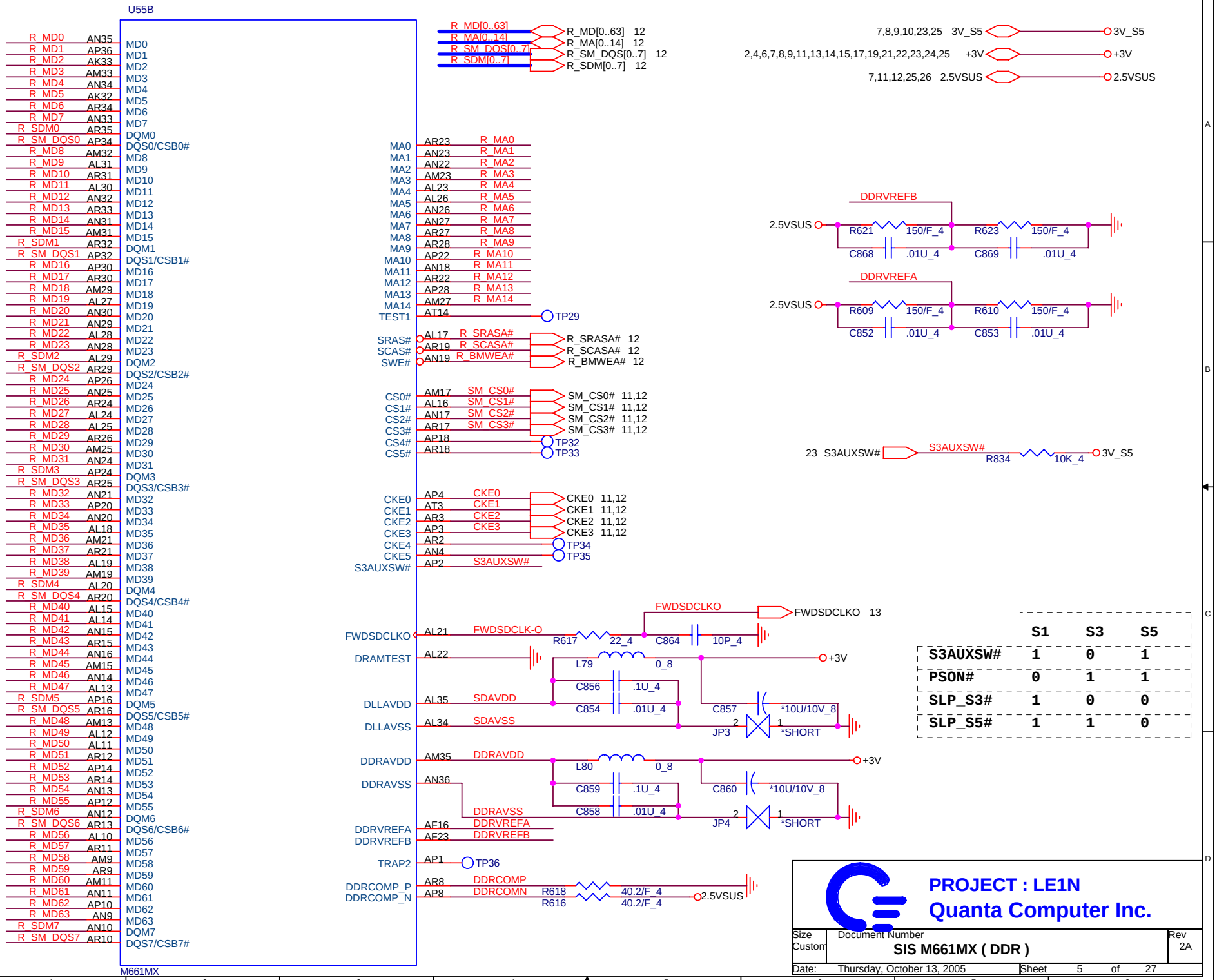

	S1	S3	S5
S3AUXSW#	1	0	1
PSON#	0	1	1
SLP_S3#	1	0	0
SLP_S5#	1	1	0

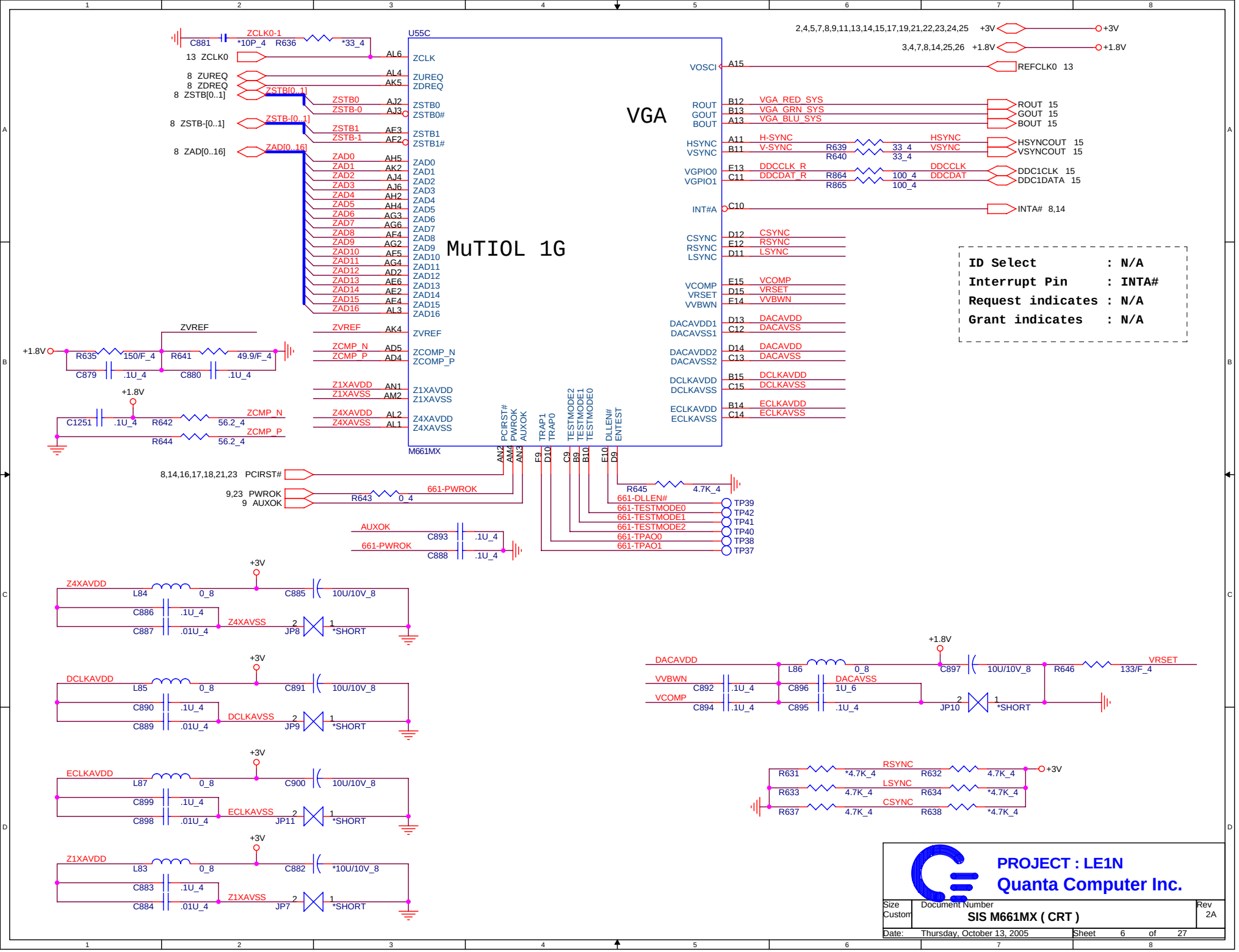
U55C
MuTIOL 1G
VGA
M661MX
ZCLK0-1
C881 *10P_4 R636 *33_4
13 ZCLK0
8 ZUREQ
8 ZDREQ
8 ZSTB[0..1]
8 ZSTB-[0..1]
8 ZAD[0..16]
ZCLK
ZUREQ
ZDREQ
ZSTB0
ZSTB0#
ZSTB1
ZSTB1#
ZAD0
ZAD1
ZAD2
ZAD3
ZAD4
ZAD5
ZAD6
ZAD7
ZAD8
ZAD9
ZAD10
ZAD11
ZAD12
ZAD13
ZAD14
ZAD15
ZAD16
ZVREF
ZCOMP_N
ZCOMP_P
Z1XAVDD
Z1XAVSS
Z4XAVDD
Z4XAVSS
VOSCI
REFCLK0 13
ROUT
GOUT
BOUT
VGA_RED_SYS
VGA_GRN_SYS
VGA_BLU_SYS
HSYNC
VSYNC
H-SYNC
V-SYNC
HSYNCOUT 15
VSYNCOUT 15
VGPIO0
VGPIO1
DDCCLK_R
DDCDAT_R
DDC1CLK 15
DDC1DATA 15
INT#A
INTA# 8,14
CSYNC
RSYNC
LSYNC
VCOMP
VRSET
VVBWN
DACAVDD1
DACAVSS1
DACAVDD2
DACAVSS2
DCLKAVDD
DCLKAVSS
ECLKAVDD
ECLKAVSS
2,4,5,7,8,9,11,13,14,15,17,19,21,22,23,24,25 +3V
3,4,7,8,14,25,26 +1.8V
ID Select : N/A
Interrupt Pin : INTA#
Request indicates : N/A
Grant indicates : N/A
8,14,16,17,18,21,23 PCIRST#
9,23 PWROK
9 AUXOK
661-PWROK
661-DLLEN#
661-TESTMODE0
661-TESTMODE1
661-TESTMODE2
661-TPAO0
661-TPAO1
TP39
TP42
TP41
TP40
TP38
TP37
AUXOK
661-PWROK
Z4XAVDD
Z4XAVSS
Z1XAVDD
Z1XAVSS
DCLKAVDD
DCLKAVSS
ECLKAVDD
ECLKAVSS
DACAVDD
DACAVSS
VVBWN
VCOMP
VRSET
133/F_4
RSYNC
LSYNC
CSYNC
PROJECT : LE1N
Quanta Computer Inc.
Size Custom
Document Number
SIS M661MX (CRT)
Rev 2A
Date: Thursday, October 13, 2005
Sheet 6 of 27

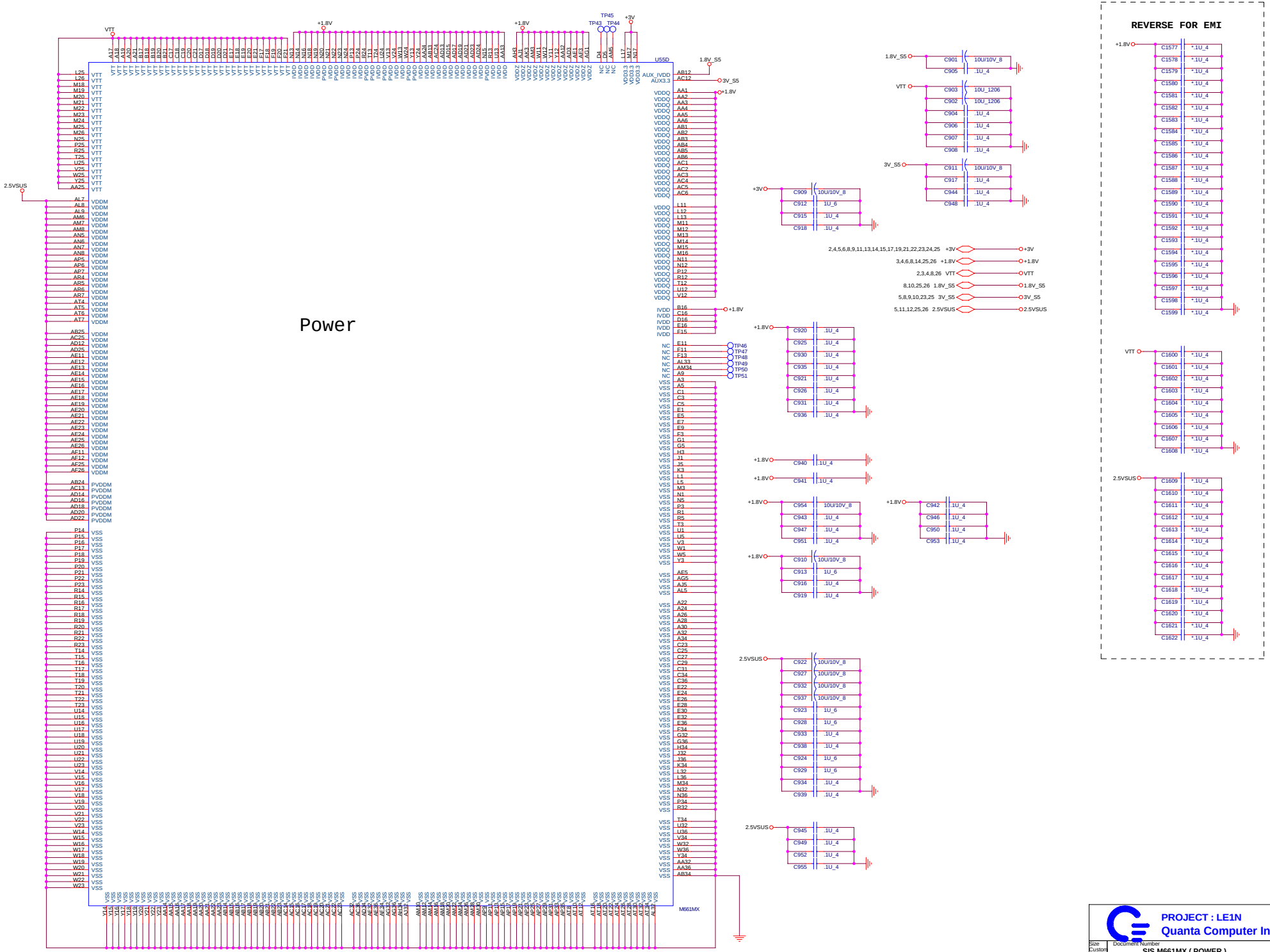

PROJECT : LE1N
Quanta Computer Inc.

Size	Document Number	Rev
Custom	SIS M661MX (POWER)	2A

Date: Thursday, October 13, 2005 Sheet 7 of 27

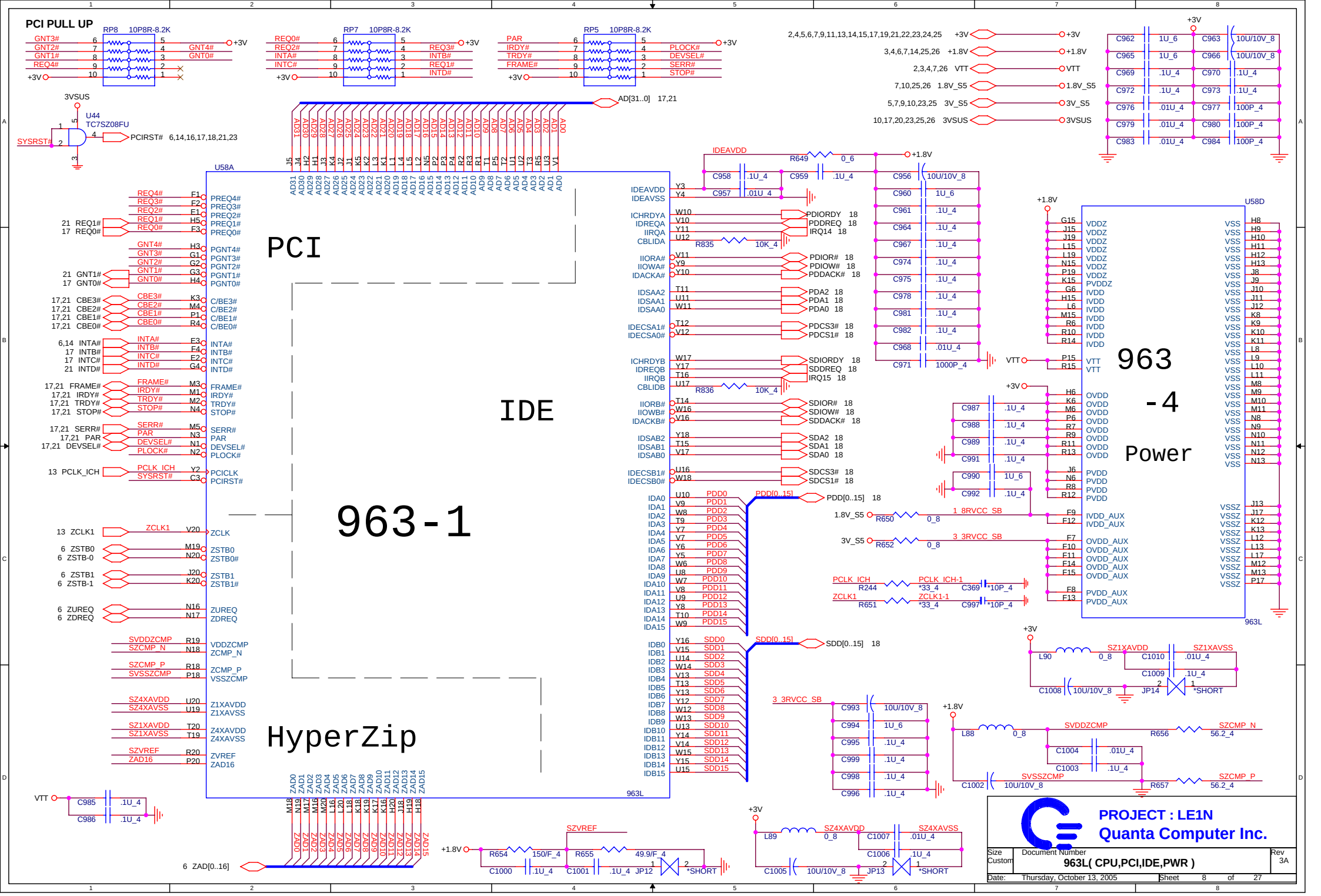
PCI PULL UP
RP8 10P8R-8.2K
RP7 10P8R-8.2K
RP5 10P8R-8.2K
U44 TC7SZ08FU
3VSUS
SYSRST#
PCIRST# 6,14,16,17,18,21,23
AD[31..0] 17,21
U58A
PCI
IDE
963-1
HyperZip
963L
U58D
963 -4 Power
IDEAVDD
+1.8V
+3V
VTT
1.8V_S5
3V_S5
PDD[0..15] 18
SDD[0..15] 18
6 ZAD[0..16]
SZVREF
PROJECT : LE1N
Quanta Computer Inc.
Size Custom
Document Number
963L(CPU,PCI,IDE,PWR)
Rev 3A
Date: Thursday, October 13, 2005
Sheet 8 of 27

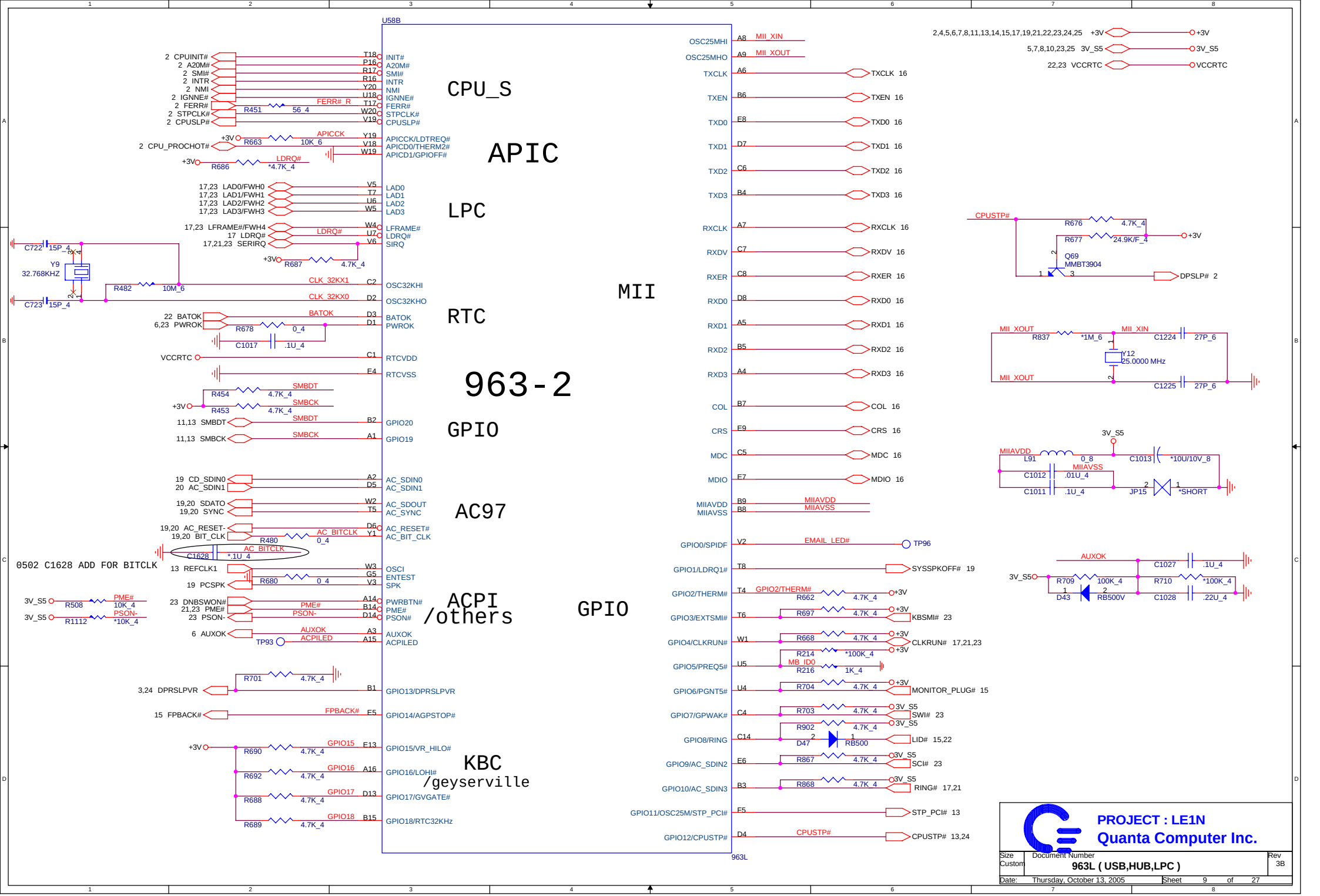
U58B
963-2
963L
CPU_S
APIC
LPC
RTC
GPIO
AC97
ACPI /others
KBC /geyserville
MII
GPIO
INIT# A20M# SMI# INTR NMI IGNNE# FERR# STPCLK# CPUSLP#
APICCK/LDTREQ# APICD0/THERM2# APICD1/GPIOFF#
LAD0 LAD1 LAD2 LAD3
LFRAME# LDRQ# SIRQ
OSC32KHI OSC32KHO
BATOK PWROK
RTCVDD RTCVSS
GPIO20 GPIO19
AC_SDIN0 AC_SDIN1
AC_SDOUT AC_SYNC
AC_RESET# AC_BIT_CLK
OSCI ENTEST SPK
PWRBTN# PME# PSON#
AUXOK ACPILED
GPIO13/DPRSLPVR
GPIO14/AGPSTOP#
GPIO15/VR_HILO#
GPIO16/LOHI#
GPIO17/GVGATE#
GPIO18/RTC32KHz
OSC25MHI OSC25MHO
TXCLK TXEN TXD0 TXD1 TXD2 TXD3
RXCLK RXDV RXER RXD0 RXD1 RXD2 RXD3
COL CRS MDC MDIO
MIIAVDD MIIAVSS
GPIO0/SPIDF GPIO1/LDRQ1# GPIO2/THERM# GPIO3/EXTSMI# GPIO4/CLKRUN# GPIO5/PREQ5# GPIO6/PGNT5# GPIO7/GPWAK# GPIO8/RING GPIO9/AC_SDIN2 GPIO10/AC_SDIN3 GPIO11/OSC25M/STP_PCI# GPIO12/CPUSTP#
MII_XIN MII_XOUT
EMAIL_LED# TP96
SYSSPKOFF# 19
KBSMI# 23
CLKRUN# 17,21,23
MONITOR_PLUG# 15
SWI# 23
LID# 15,22
SCI# 23
RING# 17,21
STP_PCI# 13
CPUSTP# 13,24
2,4,5,6,7,8,11,13,14,15,17,19,21,22,23,24,25 +3V
5,7,8,10,23,25 3V_S5
22,23 VCCRTC
CPUSTP# R676 4.7K_4 R677 24.9K/F_4 Q69 MMBT3904 DPSLP# 2
MII_XOUT R837 *1M_6 MII_XIN C1224 27P_6 Y12 25.0000 MHz C1225 27P_6
MIIAVDD L91 0_8 3V_S5 C1013 *10U/10V_8 C1012 .01U_4 MIIAVSS C1011 .1U_4 JP15 *SHORT
AUXOK 3V_S5 R709 100K_4 D43 RB500V C1027 .1U_4 R710 *100K_4 C1028 .22U_4
0502 C1628 ADD FOR BITCLK
PROJECT : LE1N
Quanta Computer Inc.
Size Custom
Document Number
963L (USB,HUB,LPC)
Rev 3B
Date: Thursday, October 13, 2005
Sheet 9 of 27

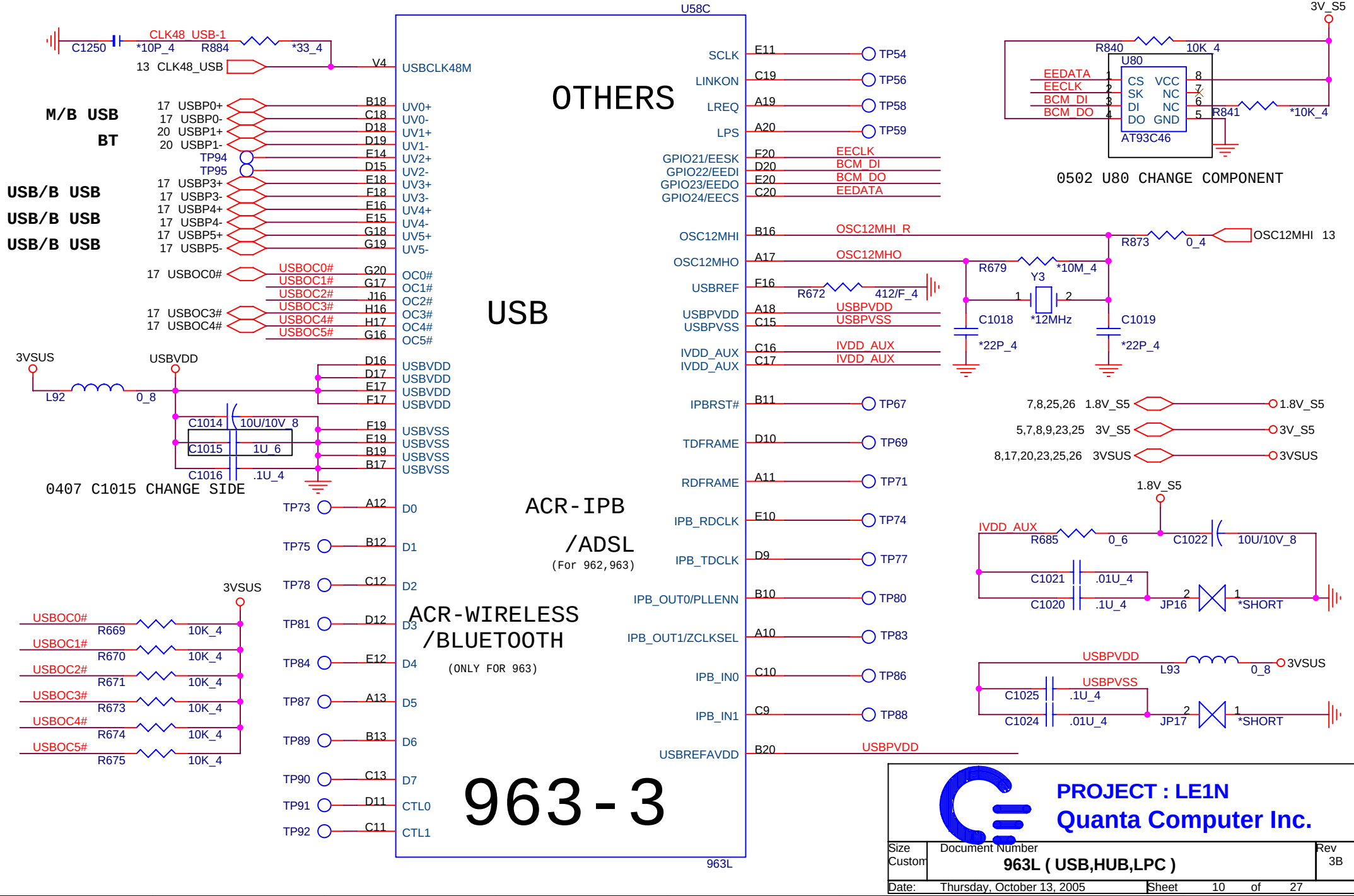

PROJECT : LE1N
Quanta Computer Inc.

Size	Document Number	Rev
Custom	963L (USB,HUB,LPC)	3B

Date: Thursday, October 13, 2005 Sheet 10 of 27

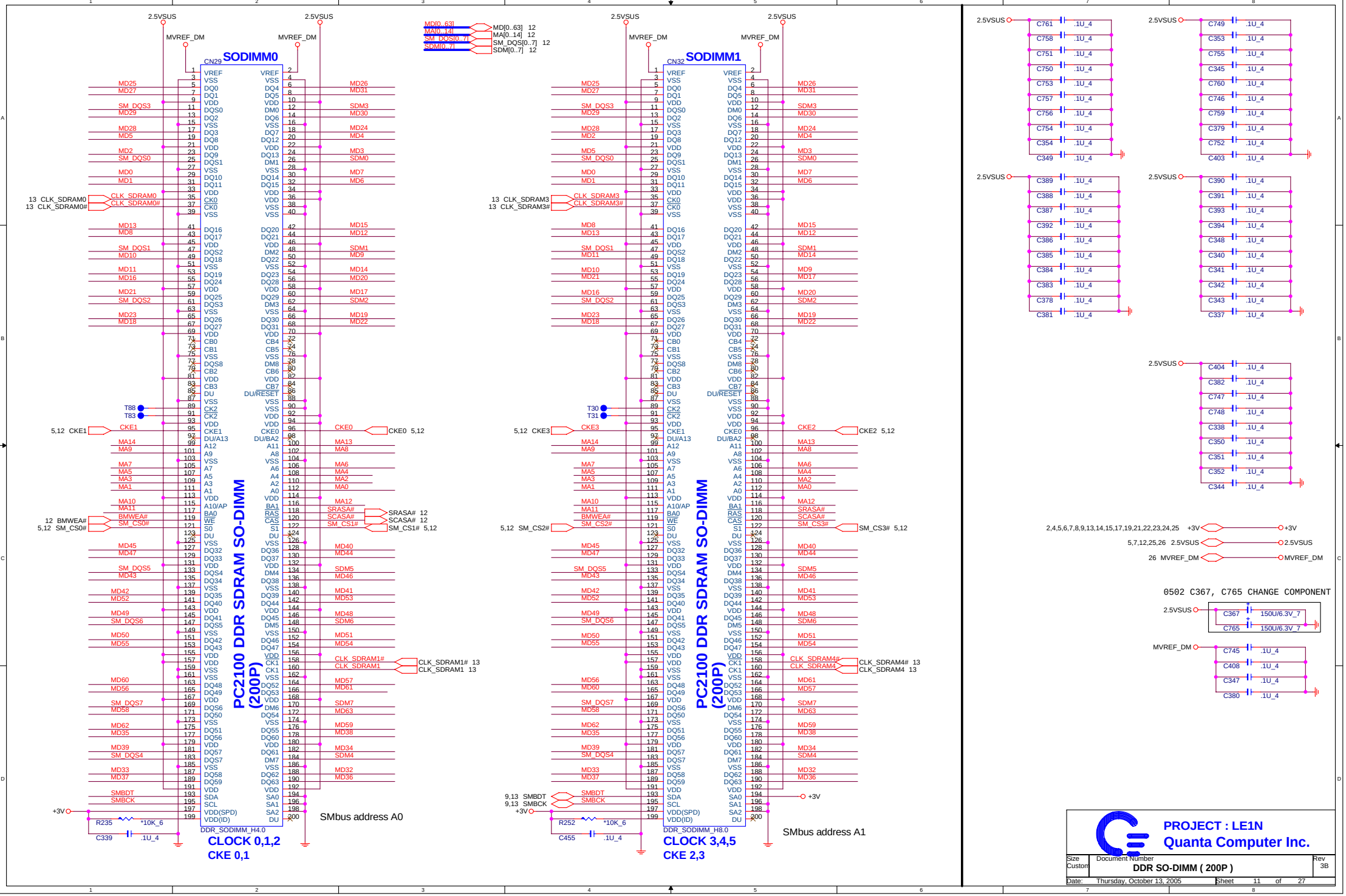
SODIMM0
CN29
PC2100 DDR SDRAM SO-DIMM (200P)
DDR_SODIMM_H4.0
CLOCK 0,1,2
CKE 0,1
SMbus address A0
SODIMM1
CN32
DDR_SODIMM_H8.0
CLOCK 3,4,5
CKE 2,3
SMbus address A1
2.5VSUS
MVREF_DM
MD[0..63] 12
MA[0..14] 12
SM_DQS[0..7] 12
SDM[0..7] 12
13 CLK_SDRAM0
13 CLK_SDRAM0#
13 CLK_SDRAM3
13 CLK_SDRAM3#
5,12 CKE1
5,12 CKE3
CKE0 5,12
CKE2 5,12
12 BMWEA#
5,12 SM_CS0#
5,12 SM_CS2#
SRASA# 12
SCASA# 12
SM_CS1# 5,12
SM_CS3# 5,12
CLK_SDRAM1# 13
CLK_SDRAM1 13
CLK_SDRAM4# 13
CLK_SDRAM4 13
9,13 SMBDT
9,13 SMBCK
+3V
R235 *10K_6
C339 .1U_4
R252 *10K_6
C455 .1U_4
2,4,5,6,7,8,9,13,14,15,17,19,21,22,23,24,25 +3V
5,7,12,25,26 2.5VSUS
26 MVREF_DM
0502 C367, C765 CHANGE COMPONENT
C367 150U/6.3V_7
C765 150U/6.3V_7
C745 .1U_4
C408 .1U_4
C347 .1U_4
C380 .1U_4
PROJECT : LE1N
Quanta Computer Inc.
Size Custom
Document Number
DDR SO-DIMM (200P)
Rev 3B
Date: Thursday, October 13, 2005
Sheet 11 of 27

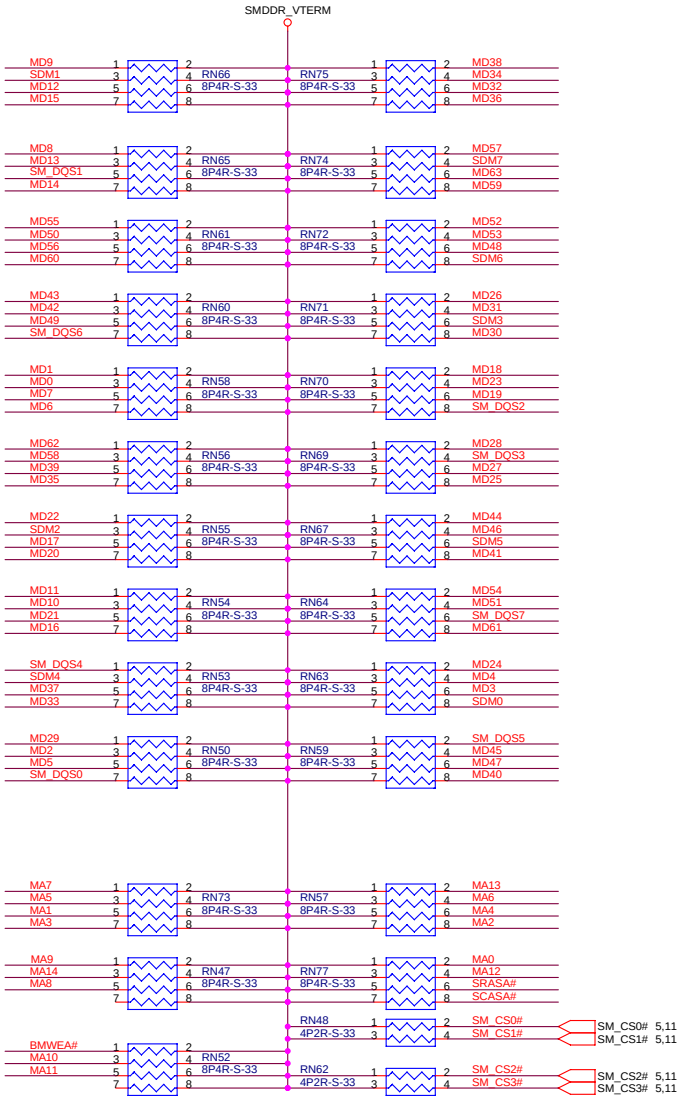

Damping put BOT,termination put TOP

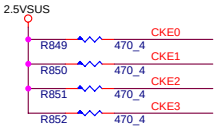

0502 C396 CHANGE COMPONENT

For terminal R-pack.

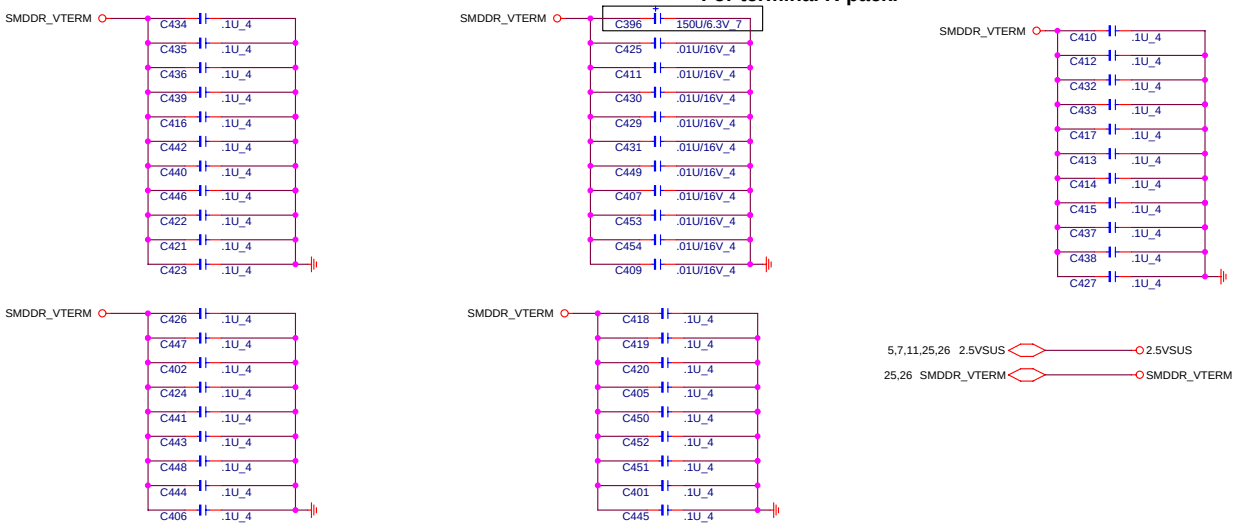

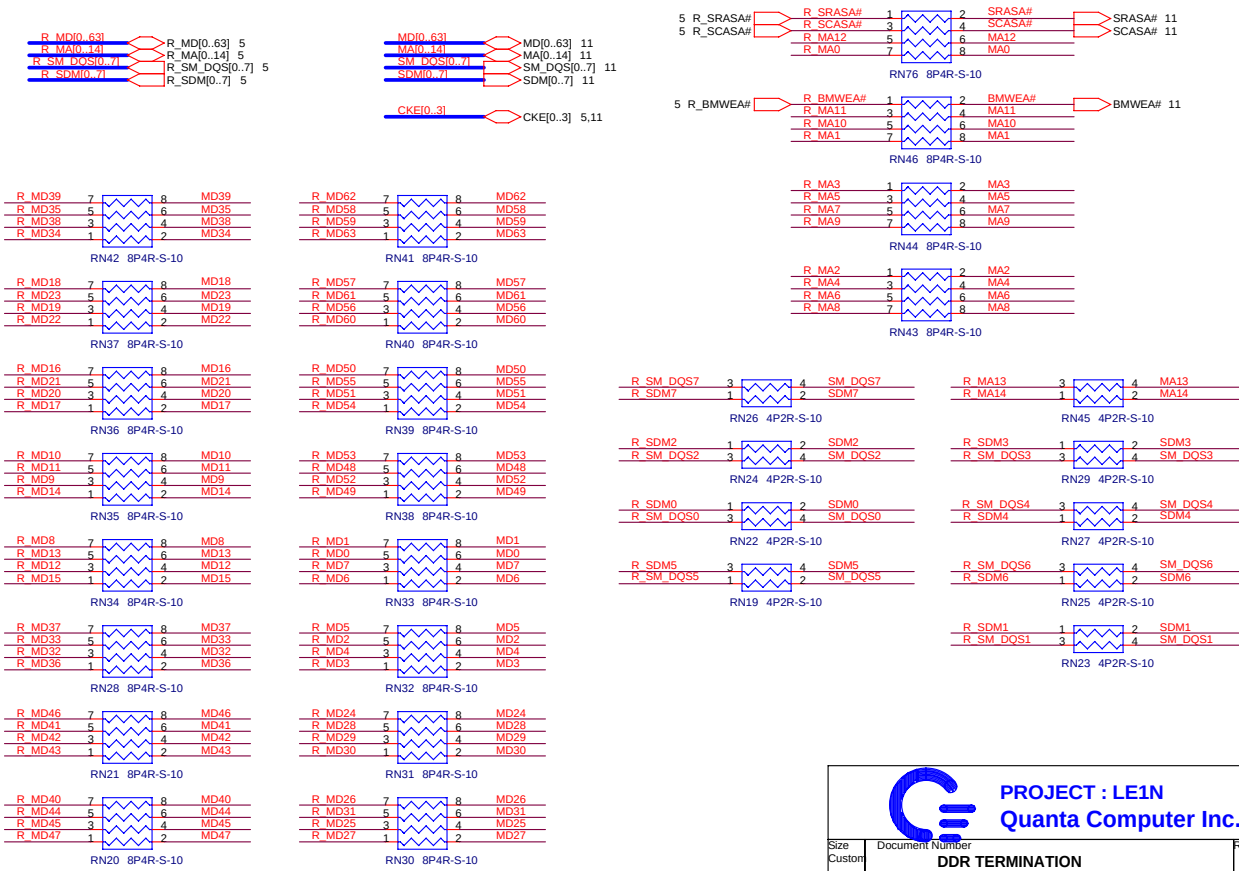

PROJECT : LE1N
Quanta Computer Inc.

Size	Document Number	Rev
Custom	DDR TERMINATION	1A

Date: Thursday, October 13, 2005 Sheet 12 of 27

MAIN CLOCK GENERATOR

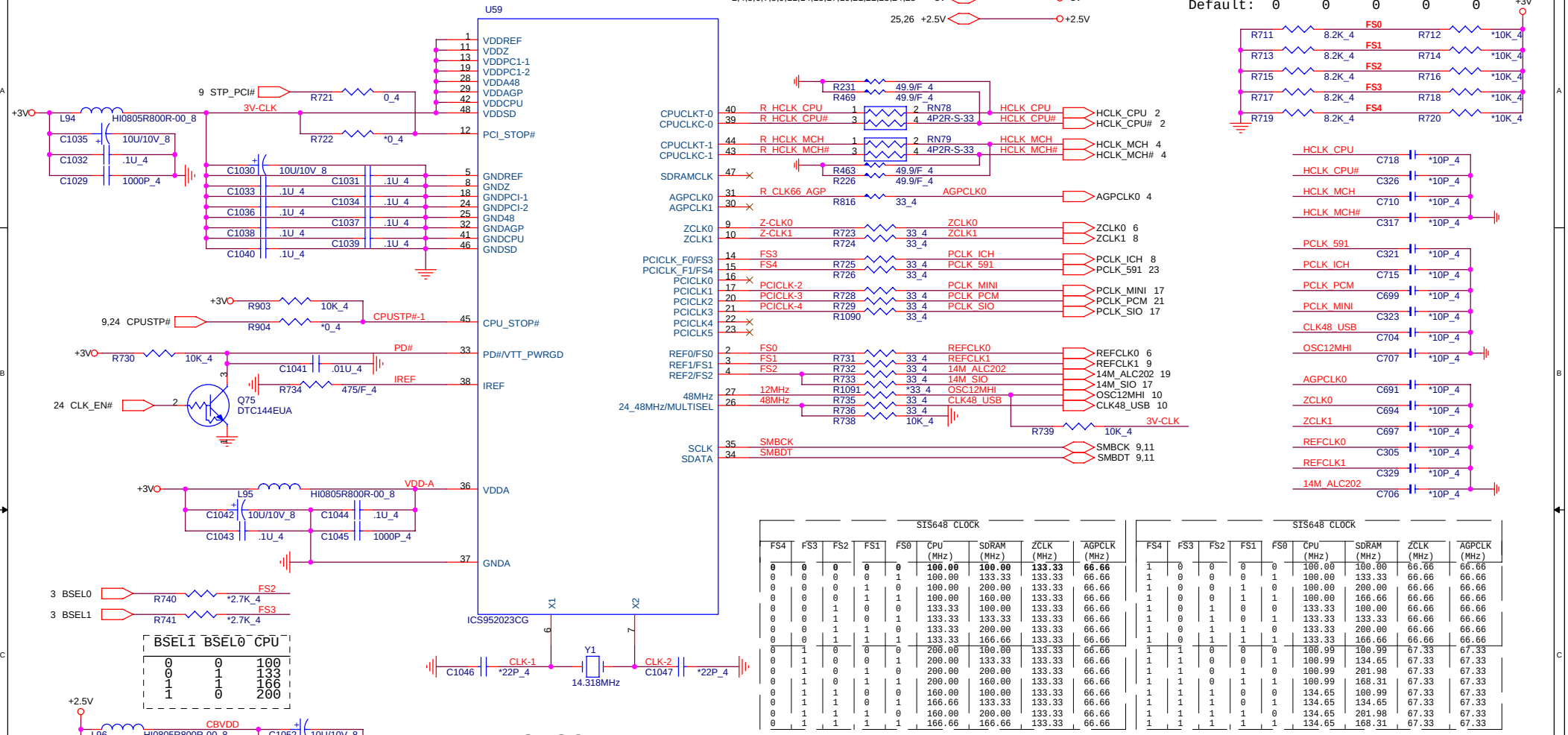

SIS648 CLOCK

FS4	FS3	FS2	FS1	FS0	CPU (MHz)	SDRAM (MHz)	ZCLK (MHz)	AGPCLK (MHz)
0	**0**	**0**	**0**	**0**	**100.00**	**100.00**	**133.33**	**66.66**
0	0	0	0	1	100.00	133.33	133.33	66.66
0	0	0	1	0	100.00	200.00	133.33	66.66
0	0	0	1	1	100.00	160.00	133.33	66.66
0	0	1	0	0	133.33	100.00	133.33	66.66
0	0	1	0	1	133.33	133.33	133.33	66.66
0	0	1	1	0	133.33	200.00	133.33	66.66
0	0	1	1	1	133.33	166.66	133.33	66.66
0	1	0	0	0	200.00	100.00	133.33	66.66
0	1	0	0	1	200.00	133.33	133.33	66.66
0	1	0	1	0	200.00	200.00	133.33	66.66
0	1	0	1	1	200.00	160.00	133.33	66.66
0	1	1	0	0	160.00	100.00	133.33	66.66
0	1	1	0	1	166.66	133.33	133.33	66.66
0	1	1	1	0	160.00	200.00	133.33	66.66
0	1	1	1	1	166.66	166.66	133.33	66.66

SIS648 CLOCK

FS4	FS3	FS2	FS1	FS0	CPU (MHz)	SDRAM (MHz)	ZCLK (MHz)	AGPCLK (MHz)
1	0	0	0	0	100.00	100.00	66.66	66.66
1	0	0	0	1	100.00	133.33	66.66	66.66
1	0	0	1	0	100.00	200.00	66.66	66.66
1	0	0	1	1	100.00	166.66	66.66	66.66
1	0	1	0	0	133.33	100.00	66.66	66.66
1	0	1	0	1	133.33	133.33	66.66	66.66
1	0	1	1	0	133.33	200.00	66.66	66.66
1	0	1	1	1	133.33	166.66	66.66	66.66
1	1	0	0	0	100.99	100.99	67.33	67.33
1	1	0	0	1	100.99	134.65	67.33	67.33
1	1	0	1	0	100.99	201.98	67.33	67.33
1	1	0	1	1	100.99	168.31	67.33	67.33
1	1	1	0	0	134.65	100.99	67.33	67.33
1	1	1	0	1	134.65	134.65	67.33	67.33
1	1	1	1	0	134.65	201.98	67.33	67.33
1	1	1	1	1	134.65	168.31	67.33	67.33

CLOCK BUFFER

PROJECT : LE1N
Quanta Computer Inc.

Size	Document Number	Rev
Custom	CLOCK GENERATION	3B

Date: Thursday, October 13, 2005 Sheet 13 of 27

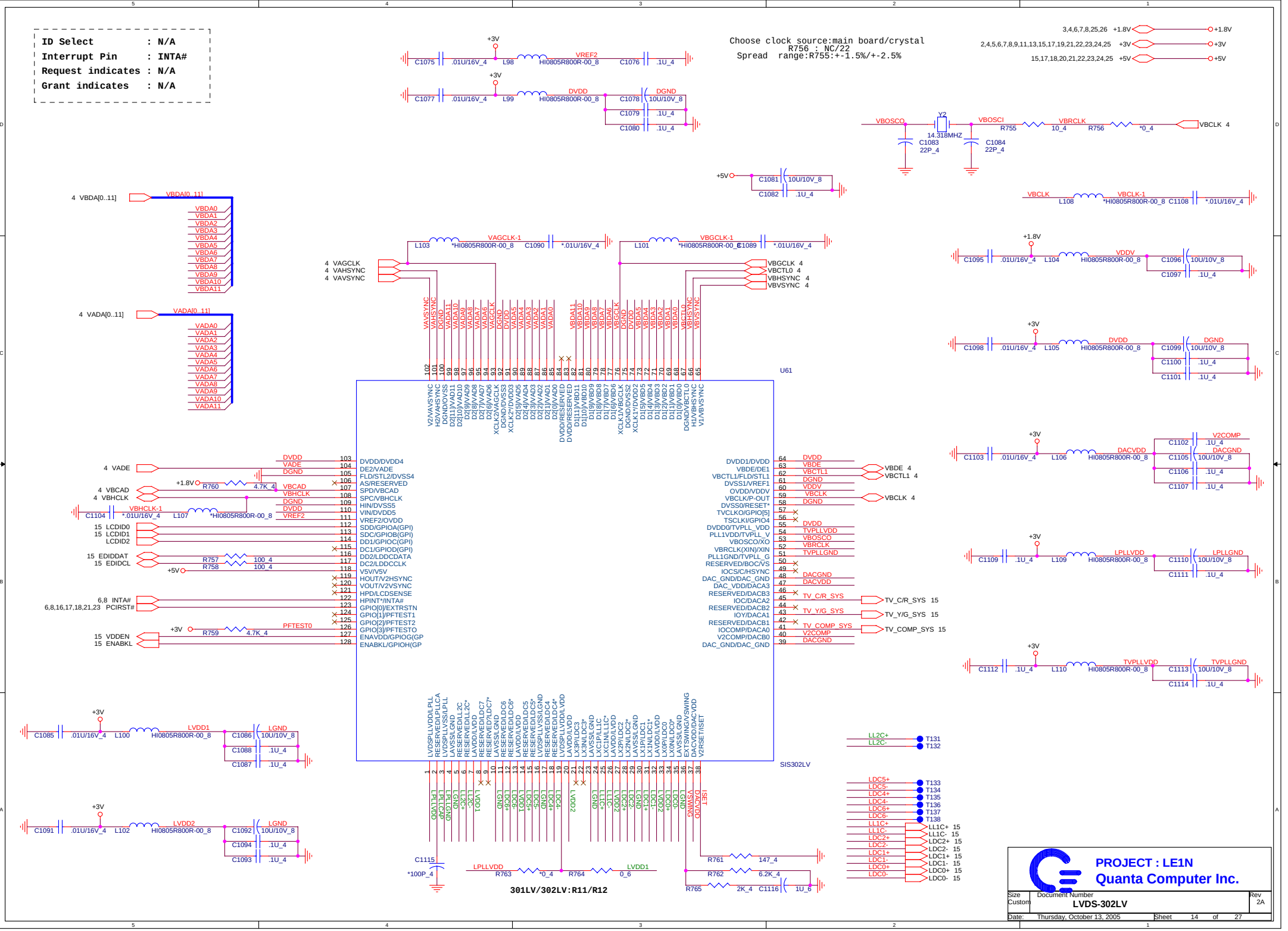
ID Select : N/A
Interrupt Pin : INTA#
Request indicates : N/A
Grant indicates : N/A
Choose clock source:main board/crystal
R756 : NC/22
Spread range:R755:+-1.5%/+-2.5%
U61
SIS302LV
301LV/302LV:R11/R12
PROJECT : LE1N
Quanta Computer Inc.
LVDS-302LV
Size Custom
Document Number
Rev 2A
Date: Thursday, October 13, 2005
Sheet 14 of 27

LCD

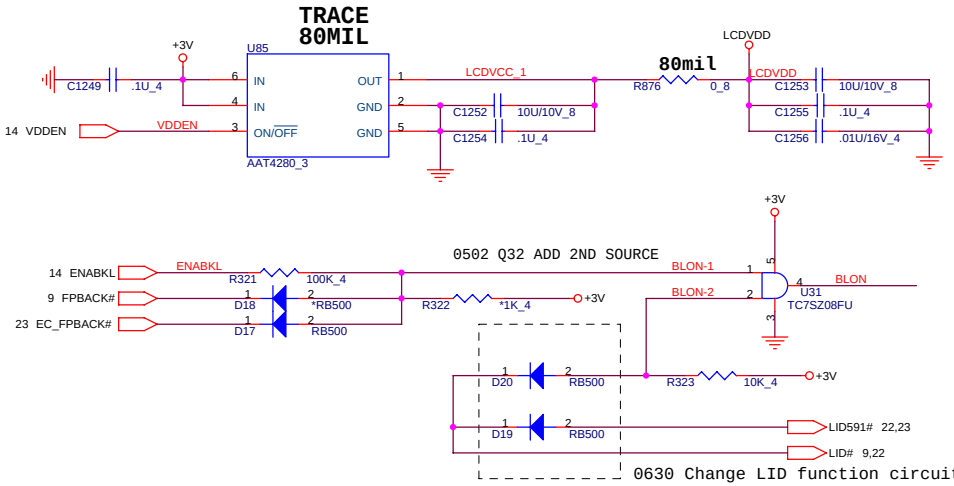

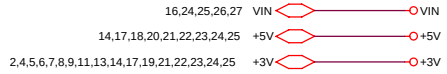

PANEL CONNECTOR

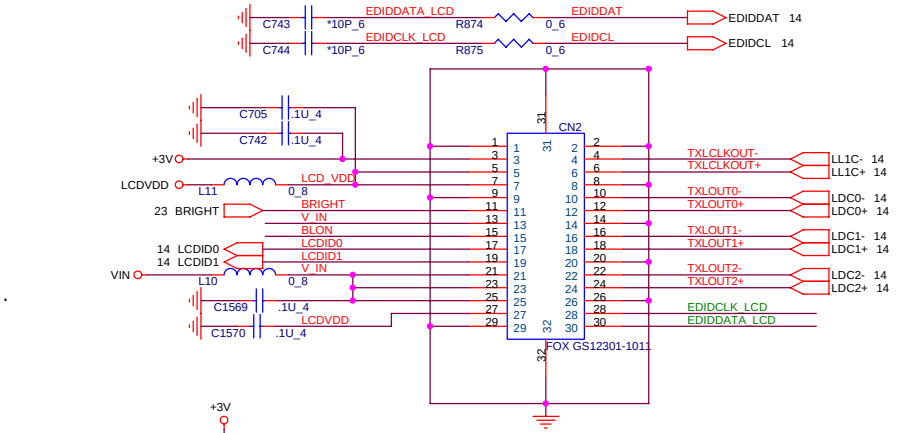

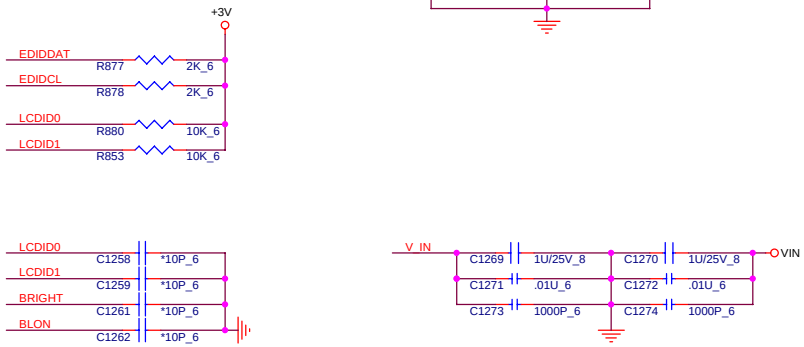

S-VIDEO

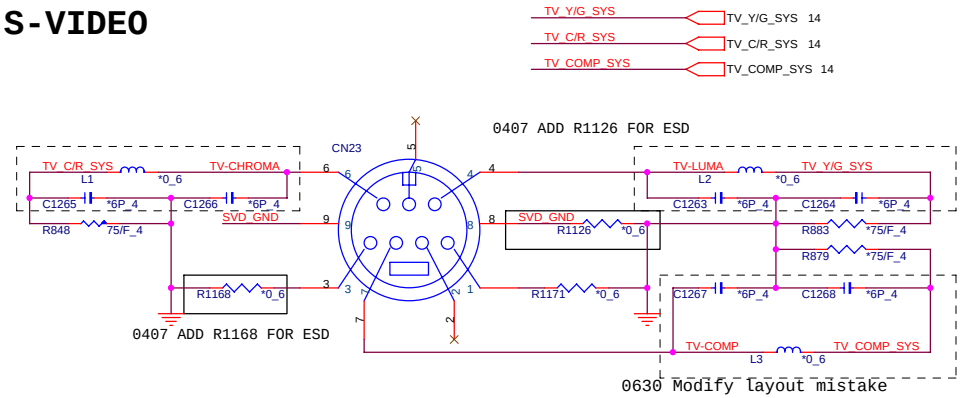

CRT

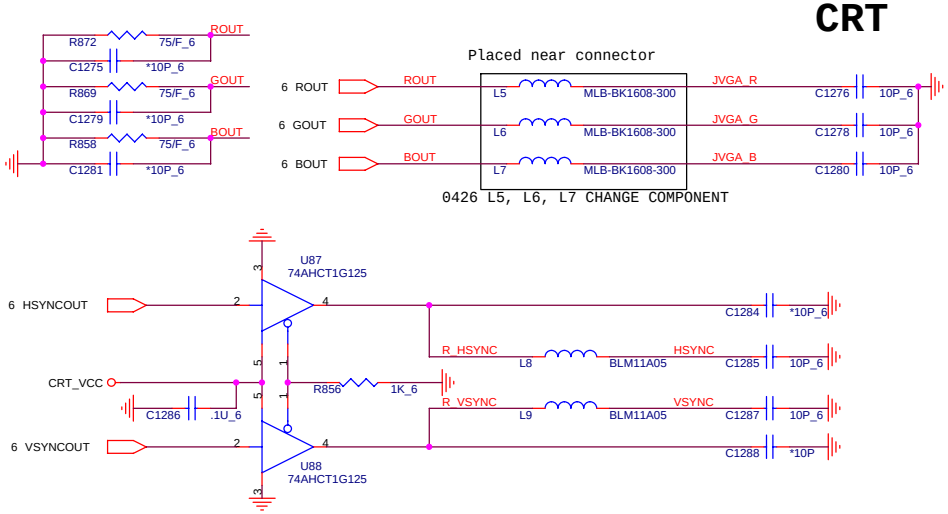

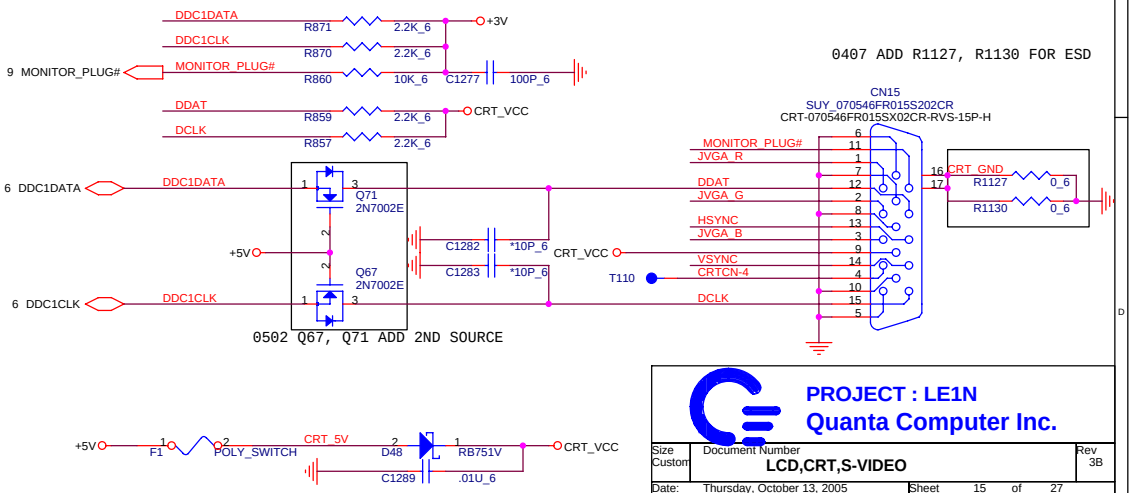

PROJECT : LE1N
Quanta Computer Inc.

Size	Document Number	Rev
Custom	LCD,CRT,S-VIDEO	3B
Date: Thursday, October 13, 2005	Sheet 15 of 27	

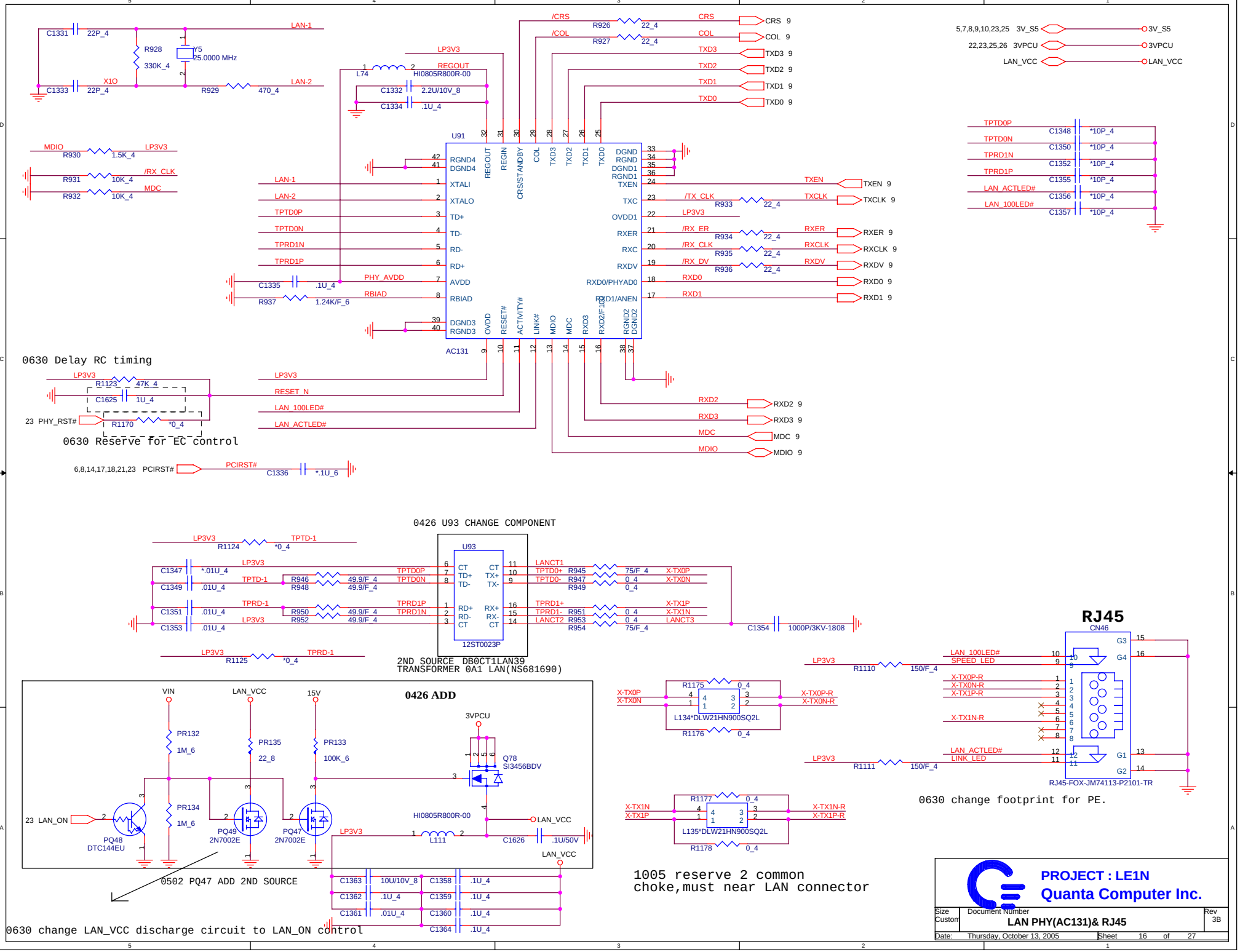
U91
AC131
0630 Delay RC timing
0630 Reserve for EC control
0426 U93 CHANGE COMPONENT
U93
12ST0023P
2ND SOURCE DB0CT1LAN39
TRANSFORMER 0A1 LAN(NS681690)
0426 ADD
0502 PQ47 ADD 2ND SOURCE
0630 change LAN_VCC discharge circuit to LAN_ON control
L134*DLW21HN900SQ2L
L135*DLW21HN900SQ2L
1005 reserve 2 common
choke,must near LAN connector
RJ45
CN46
RJ45-FOX-JM74113-P2101-TR
0630 change footprint for PE.
PROJECT : LE1N
Quanta Computer Inc.
Size Custom
Document Number
LAN PHY(AC131)& RJ45
Rev 3B
Date: Thursday, October 13, 2005
Sheet 16 of 27

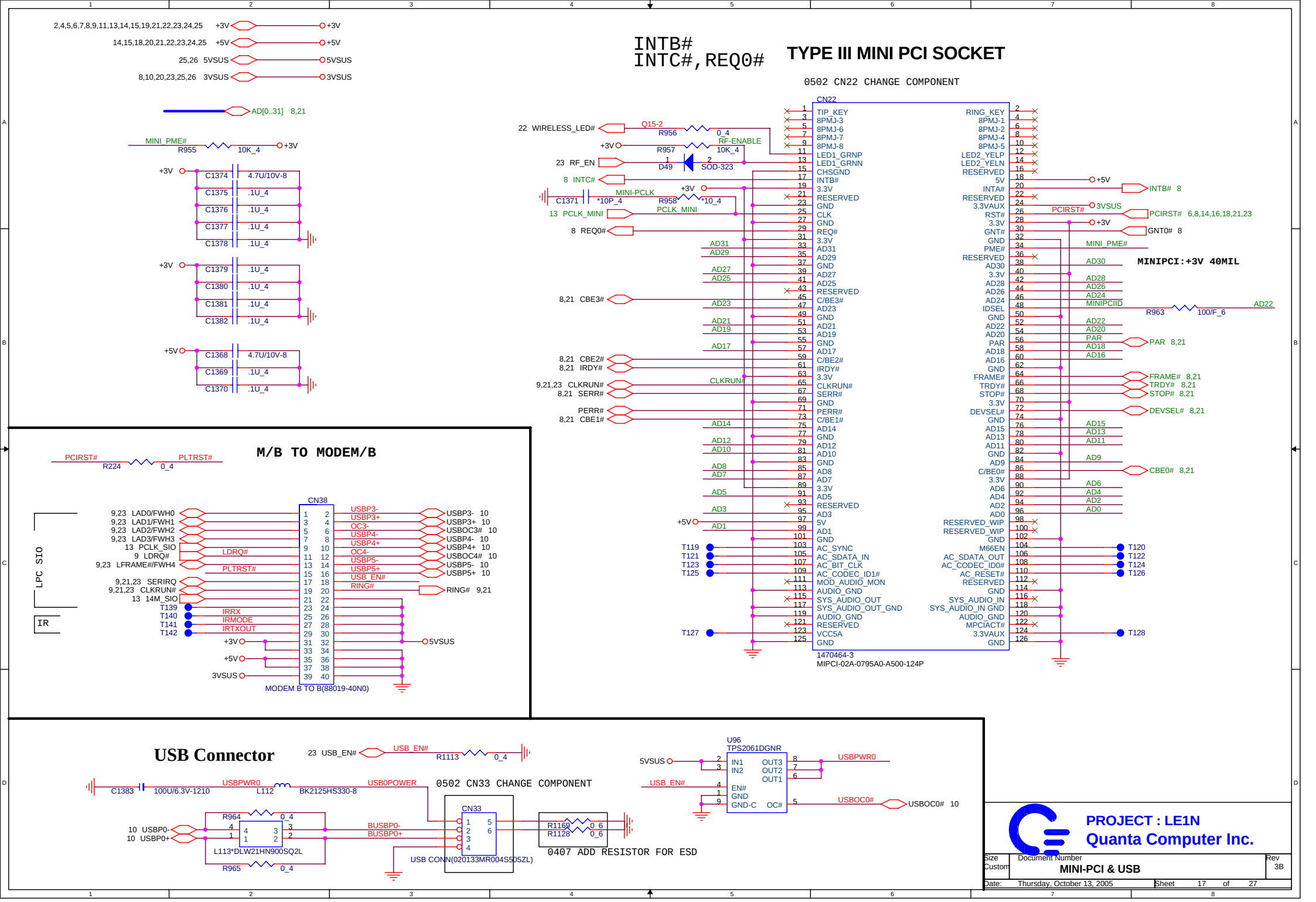
TYPE III MINI PCI SOCKET
INTB#
INTC#,REQ0#
0502 CN22 CHANGE COMPONENT
CN22
MINIPCI:+3V 40MIL
1470464-3
MIPCI-02A-0795A0-A500-124P
M/B TO MODEM/B
CN38
MODEM B TO B(88019-40N0)
LPC SIO
IR
USB Connector
0502 CN33 CHANGE COMPONENT
CN33
USB CONN(020133MR004S505ZL)
0407 ADD RESISTOR FOR ESD
U96
TPS2061DGNR
L113*DLW21HN900SQ2L
PROJECT : LE1N
Quanta Computer Inc.
Size
Custom
Document Number
MINI-PCI & USB
Rev
3B
Date: Thursday, October 13, 2005
Sheet 17 of 27

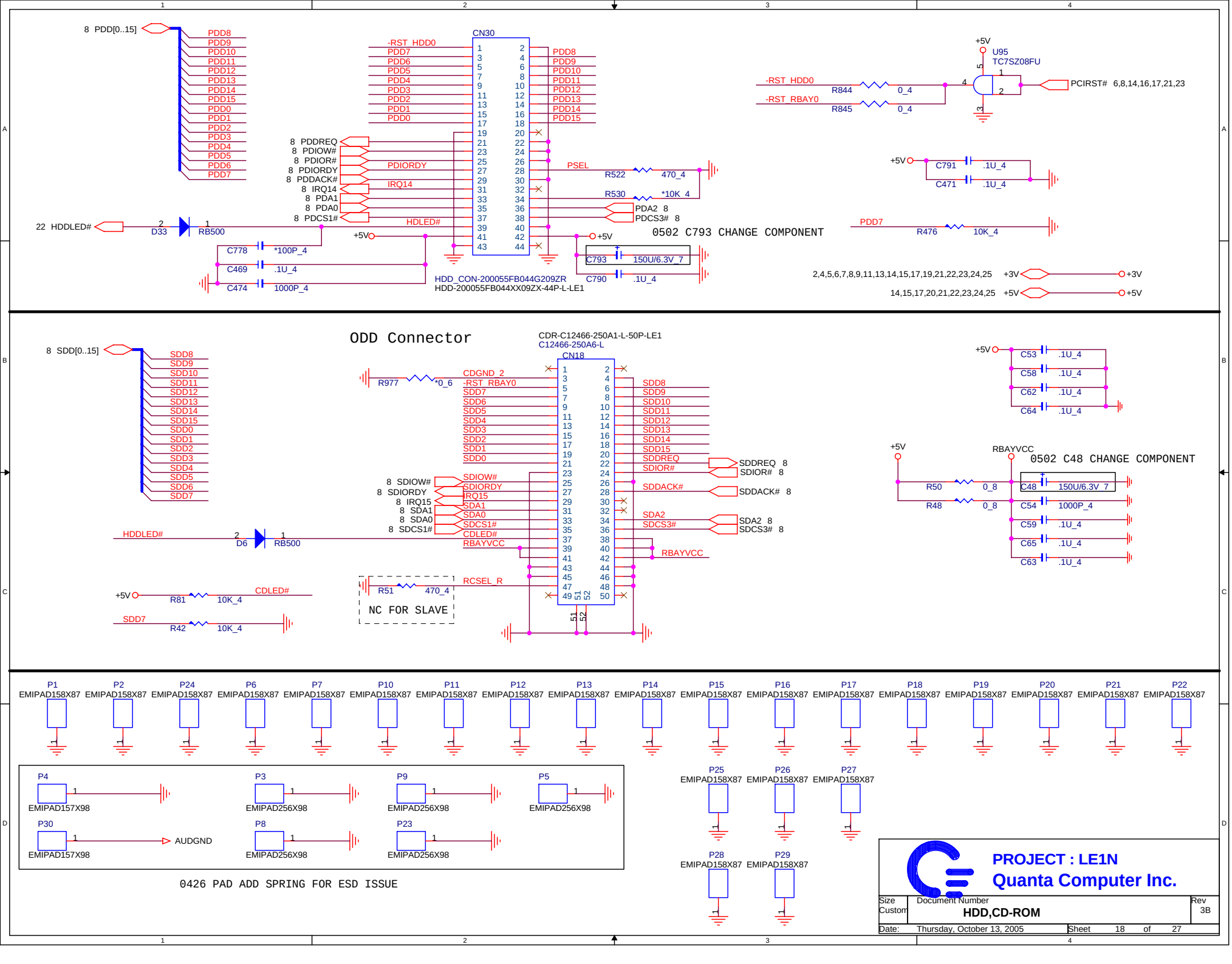
8 PDD[0..15]
PDD8
PDD9
PDD10
PDD11
PDD12
PDD13
PDD14
PDD15
PDD0
PDD1
PDD2
PDD3
PDD4
PDD5
PDD6
PDD7
CN30
-RST_HDD0
8 PDDREQ
8 PDIOW#
8 PDIOR#
8 PDIORDY
8 PDDACK#
8 IRQ14
8 PDA1
8 PDA0
8 PDCS1#
PDIORDY
IRQ14
HDLED#
PSEL
R522 470_4
R530 *10K_4
PDA2 8
PDCS3# 8
22 HDDLED#
D33
RB500
C778 *100P_4
C469 .1U_4
C474 1000P_4
+5V
C793 150U/6.3V_7
C790 .1U_4
HDD_CON-200055FB044G209ZR
HDD-200055FB044XX09ZX-44P-L-LE1
0502 C793 CHANGE COMPONENT
U95
TC7SZ08FU
R844 0_4
R845 0_4
PCIRST# 6,8,14,16,17,21,23
C791 .1U_4
C471 .1U_4
PDD7
R476 10K_4
2,4,5,6,7,8,9,11,13,14,15,17,19,21,22,23,24,25 +3V
14,15,17,20,21,22,23,24,25 +5V
ODD Connector
CDR-C12466-250A1-L-50P-LE1
C12466-250A6-L
CN18
8 SDD[0..15]
SDD8
SDD9
SDD10
SDD11
SDD12
SDD13
SDD14
SDD15
SDD0
SDD1
SDD2
SDD3
SDD4
SDD5
SDD6
SDD7
R977 *0_6
CDGND_2
-RST_RBAY0
SDDREQ 8
SDIOR# 8
8 SDIOW#
8 SDIORDY
8 IRQ15
8 SDA1
8 SDA0
8 SDCS1#
SDIOW#
SDIORDY
IRQ15
SDA1
SDA0
SDCS1#
CDLED#
RBAYVCC
SDDACK#
SDDACK# 8
SDA2
SDCS3#
SDA2 8
SDCS3# 8
HDDLED#
D6
RB500
+5V
R81 10K_4
CDLED#
SDD7
R42 10K_4
R51 470_4
RCSEL_R
NC FOR SLAVE
C53 .1U_4
C58 .1U_4
C62 .1U_4
C64 .1U_4
RBAYVCC
0502 C48 CHANGE COMPONENT
R50 0_8
R48 0_8
C48 150U/6.3V_7
C54 1000P_4
C59 .1U_4
C65 .1U_4
C63 .1U_4
P1 EMIPAD158X87
P2 EMIPAD158X87
P24 EMIPAD158X87
P6 EMIPAD158X87
P7 EMIPAD158X87
P10 EMIPAD158X87
P11 EMIPAD158X87
P12 EMIPAD158X87
P13 EMIPAD158X87
P14 EMIPAD158X87
P15 EMIPAD158X87
P16 EMIPAD158X87
P17 EMIPAD158X87
P18 EMIPAD158X87
P19 EMIPAD158X87
P20 EMIPAD158X87
P21 EMIPAD158X87
P22 EMIPAD158X87
P4 EMIPAD157X98
P3 EMIPAD256X98
P9 EMIPAD256X98
P5 EMIPAD256X98
P30 EMIPAD157X98
AUDGND
P8 EMIPAD256X98
P23 EMIPAD256X98
P25 EMIPAD158X87
P26 EMIPAD158X87
P27 EMIPAD158X87
P28 EMIPAD158X87
P29 EMIPAD158X87
0426 PAD ADD SPRING FOR ESD ISSUE
PROJECT : LE1N
Quanta Computer Inc.
Size Custom
Document Number
HDD,CD-ROM
Rev 3B
Date: Thursday, October 13, 2005
Sheet 18 of 27

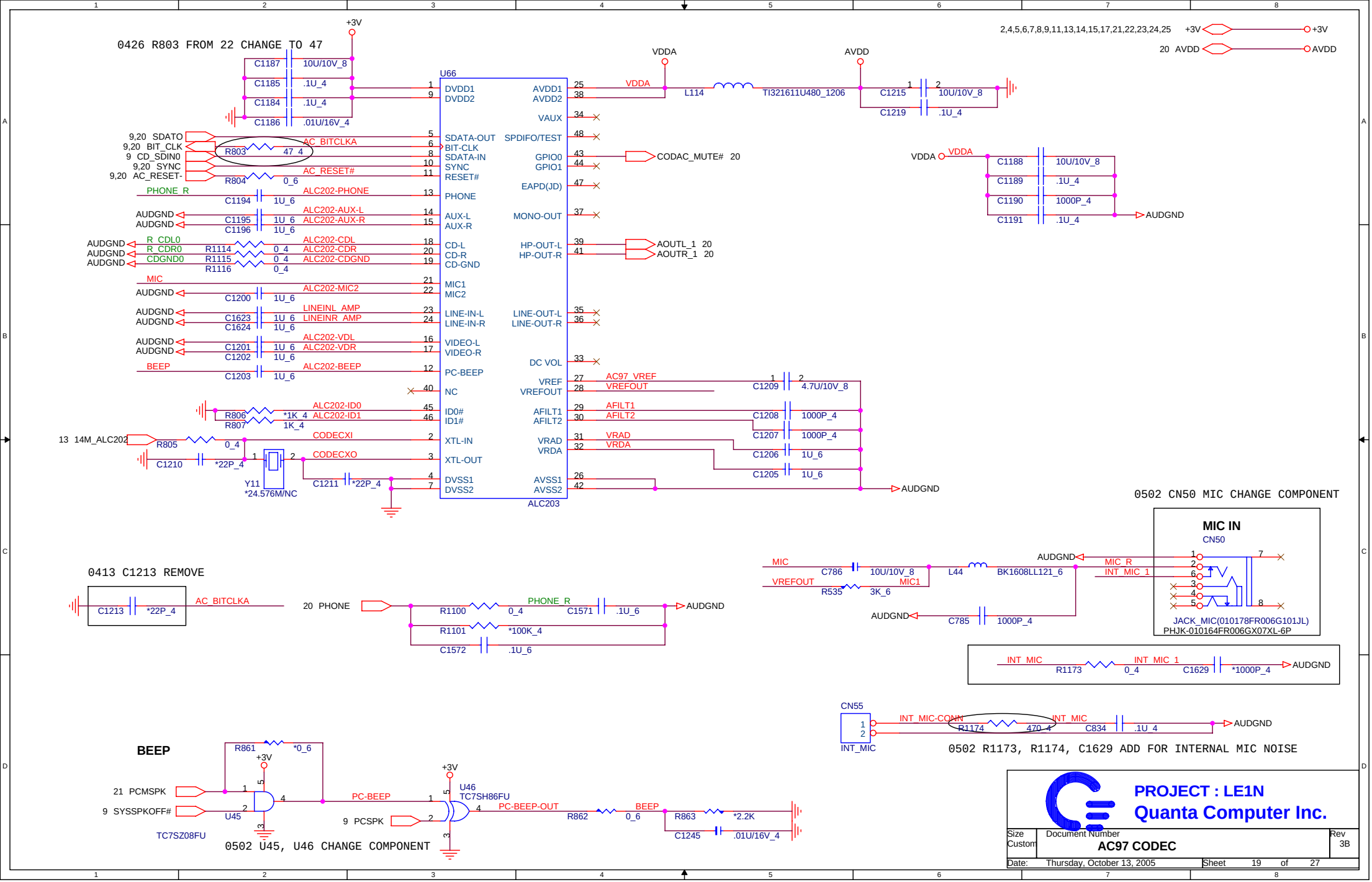
0426 R803 FROM 22 CHANGE TO 47
U66
ALC203
VDDA
AVDD
L114
TI321611U480_1206
CODAC_MUTE# 20
AOUTL_1 20
AOUTR_1 20
AUDGND
0413 C1213 REMOVE
0502 CN50 MIC CHANGE COMPONENT
MIC IN
CN50
JACK_MIC(010178FR006G101JL)
PHJK-010164FR006GX07XL-6P
CN55
INT_MIC
0502 R1173, R1174, C1629 ADD FOR INTERNAL MIC NOISE
BEEP
TC7SZ08FU
U45
U46
TC7SH86FU
0502 U45, U46 CHANGE COMPONENT
PROJECT : LE1N
Quanta Computer Inc.
Size Custom
Document Number
AC97 CODEC
Rev 3B
Date: Thursday, October 13, 2005
Sheet 19 of 27

0630 Change C1437 and C1439 to AMP-HPVDD,L120 change from 10 ohm to 0 ohm

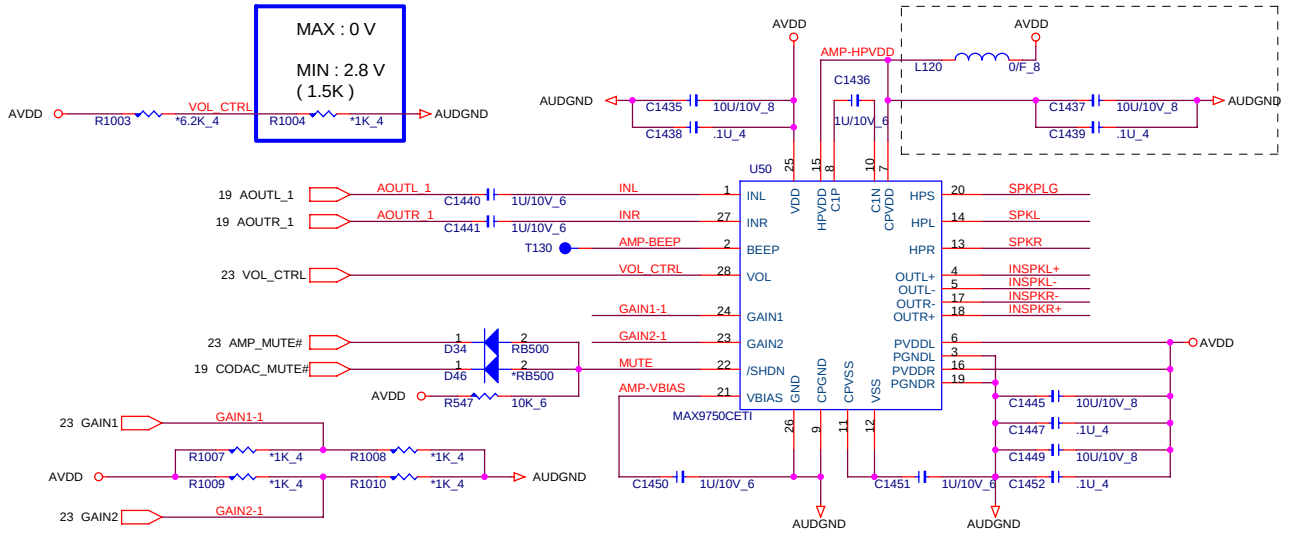

GAIN2	GAIN1	SPKR MODE	HP MODE
0	0	6	0
0	1	7.5	
1	0	9	3
1	1	10.5	

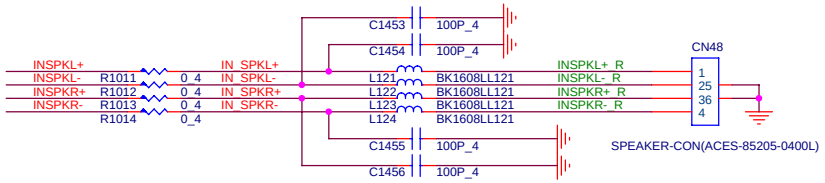

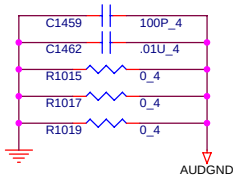

HEADPHONE OUT

0502 CN49 HEADPHONE CHANGE COMPONENT

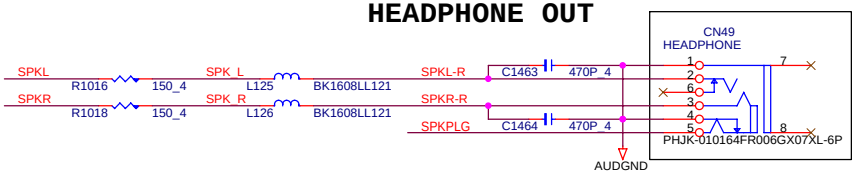

MDC

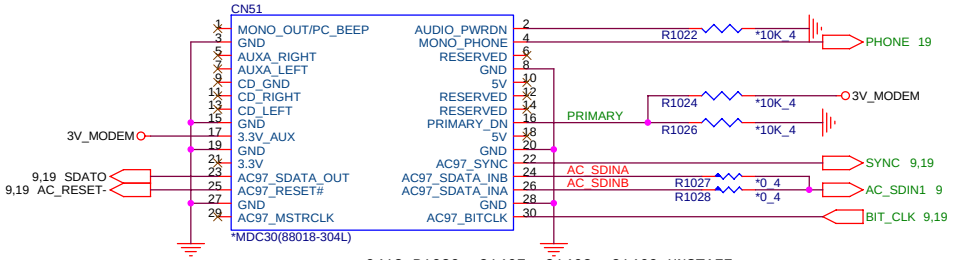

0413 R1030, C1467, C1468, C1469 UNSTAFF

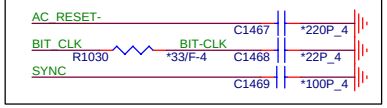

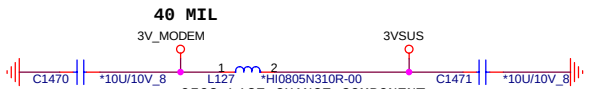

0502 L127 CHANGE COMPONENT

BLUETOOTH

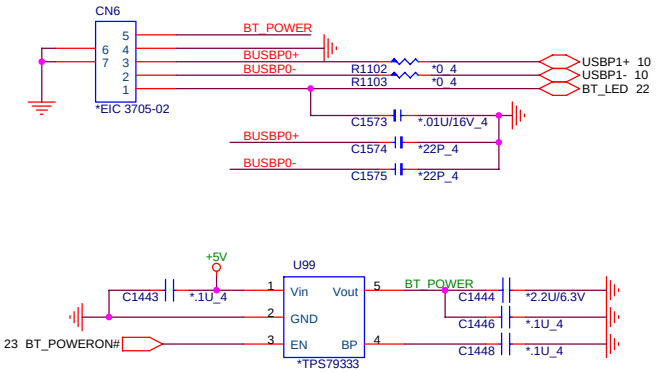

AUDIO POWER

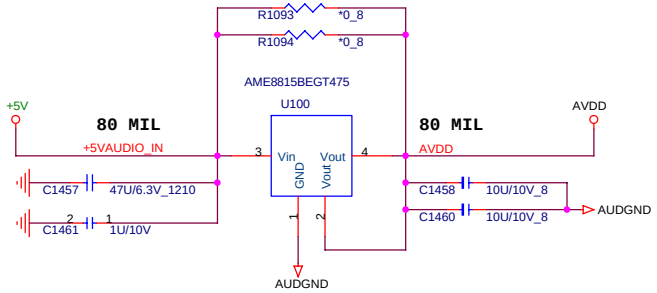

PROJECT : LE1N
Quanta Computer Inc.

Size	Document Number	Rev
Custom	AUDIO AMP,MDC,PWR & BEEP	3B
Date: Thursday, October 13, 2005	Sheet 20 of 27	

ID Select : AD17
Interrupt Pin : INTD#
Request Indicate : REQ1#
Grant Indicate : GNT1#

0426 ADD U65 2ND SOURCE

2ND SOURCE AJ014100F31
IC(144P) PCI1410ASPGE(LQFP)

U65
PCI1410A

0502 U64 CHANGE COMPONENT

U64
TPS2211A

Near TPS2211A

Near TPS2211A

Near Slot

CN28

UPPER PIN

LOWER PIN

CARDBUS SLOT
WZ21131-G2

+3V Plane

Near Chipset

Near Chipset

delay 10ms at least

PROJECT : LE1N
Quanta Computer Inc.

Size	Document Number	Rev
Custom	PCMCIA(PCI1410)	3B

Date: Thursday, October 13, 2005 Sheet 21 of 27

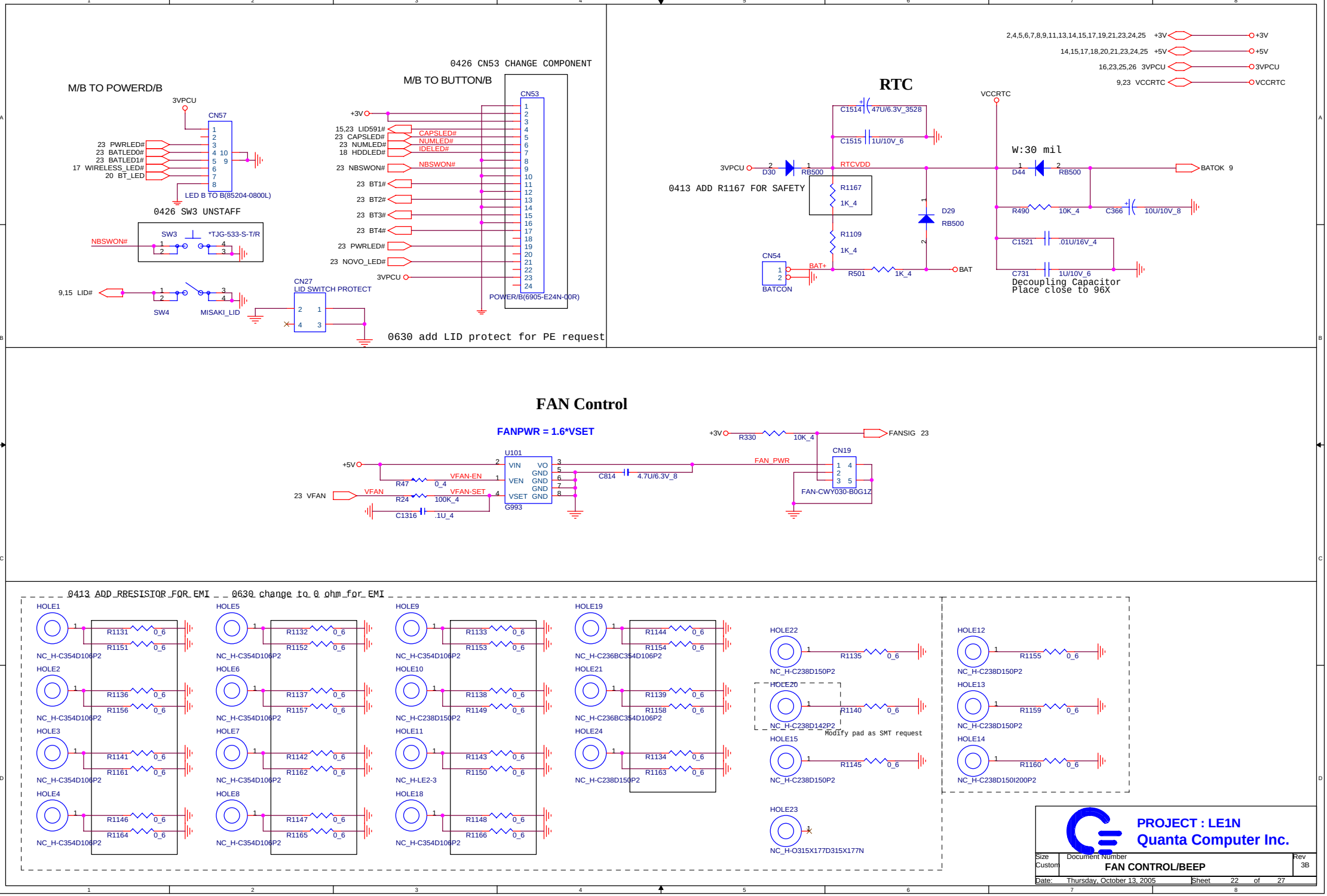
M/B TO POWERD/B
3VPCU
CN57
23 PWRLED#
23 BATLED0#
23 BATLED1#
17 WIRELESS_LED#
20 BT_LED
LED B TO B(85204-0800L)
0426 SW3 UNSTAFF
NBSWON#
SW3
*TJG-533-S-T/R
9,15 LID#
SW4
MISAKI_LID
CN27
LID SWITCH PROTECT
0426 CN53 CHANGE COMPONENT
M/B TO BUTTON/B
CN53
+3V
15,23 LID591#
23 CAPSLED#
23 NUMLED#
18 HDDLED#
CAPSLED#
NUMLED#
IDELED#
23 NBSWON#
NBSWON#
23 BT1#
23 BT2#
23 BT3#
23 BT4#
23 PWRLED#
23 NOVO_LED#
3VPCU
POWER/B(6905-E24N-00R)
0630 add LID protect for PE request
RTC
2,4,5,6,7,8,9,11,13,14,15,17,19,21,23,24,25 +3V
14,15,17,18,20,21,23,24,25 +5V
16,23,25,26 3VPCU
9,23 VCCRTC
C1514 47U/6.3V_3528
C1515 1U/10V_6
VCCRTC
W:30 mil
3VPCU
D30
RB500
RTCVDD
0413 ADD R1167 FOR SAFETY
R1167
1K_4
D29
RB500
R1109
1K_4
CN54
BATCON
BAT+
R501
1K_4
BAT
D44
RB500
BATOK 9
R490
10K_4
C366
10U/10V_8
C1521
.01U/16V_4
C731
1U/10V_6
Decoupling Capacitor
Place close to 96X
FAN Control
FANPWR = 1.6*VSET
+3V
R330
10K_4
FANSIG 23
U101
+5V
VIN
VO
VEN
VSET
GND
VFAN-EN
VFAN-SET
R47
0_4
23 VFAN
VFAN
R24
100K_4
C1316
.1U_4
G993
C814
4.7U/6.3V_8
FAN_PWR
CN19
FAN-CWY030-B0G1Z
0413 ADD RRESISTOR FOR EMI
0630 change to 0 ohm for EMI
HOLE1
R1131
R1151
NC_H-C354D106P2
HOLE2
R1136
R1156
NC_H-C354D106P2
HOLE3
R1141
R1161
NC_H-C354D106P2
HOLE4
R1146
R1164
NC_H-C354D106P2
HOLE5
R1132
R1152
NC_H-C354D106P2
HOLE6
R1137
R1157
NC_H-C354D106P2
HOLE7
R1142
R1162
NC_H-C354D106P2
HOLE8
R1147
R1165
NC_H-C354D106P2
HOLE9
R1133
R1153
NC_H-C354D106P2
HOLE10
R1138
R1149
NC_H-C238D150P2
HOLE11
R1143
R1150
NC_H-LE2-3
HOLE18
R1148
R1166
NC_H-C354D106P2
HOLE19
R1144
R1154
NC_H-C236BC354D106P2
HOLE21
R1139
R1158
NC_H-C236BC354D106P2
HOLE24
R1134
R1163
NC_H-C238D150P2
HOLE22
R1135
NC_H-C238D150P2
HOLE20
R1140
NC_H-C238D142P2
Modify pad as SMT request
HOLE15
R1145
NC_H-C238D150P2
HOLE23
NC_H-O315X177D315X177N
HOLE12
R1155
NC_H-C238D150P2
HOLE13
R1159
NC_H-C238D150P2
HOLE14
R1160
NC_H-C238D150I200P2
PROJECT : LE1N
Quanta Computer Inc.
Size Custom
Document Number
FAN CONTROL/BEEP
Rev 3B
Date: Thursday, October 13, 2005
Sheet 22 of 27

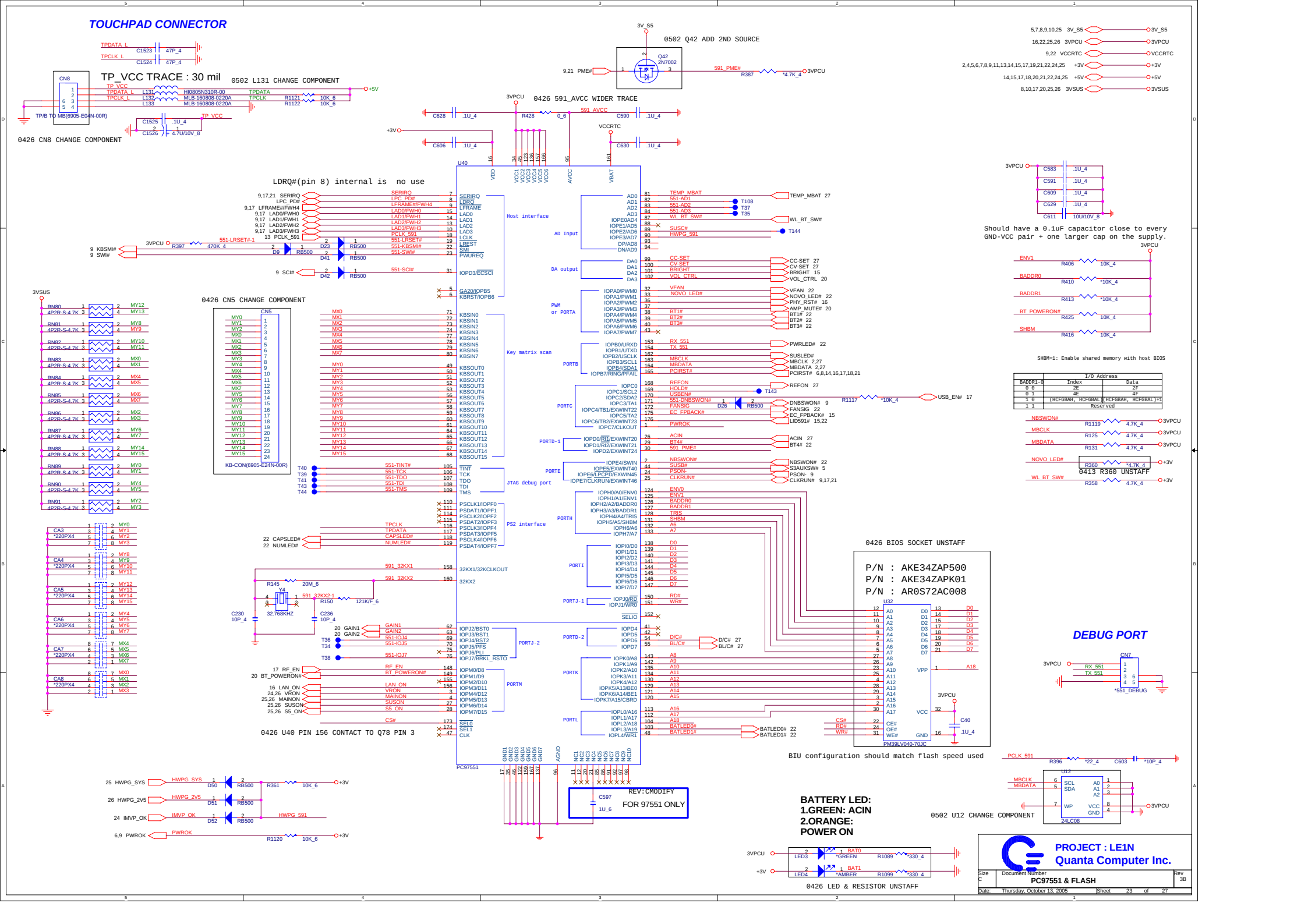
TOUCHPAD CONNECTOR
TP_VCC TRACE : 30 mil
0502 L131 CHANGE COMPONENT
0426 CN8 CHANGE COMPONENT
0502 Q42 ADD 2ND SOURCE
0426 591_AVCC WIDER TRACE
LDRQ#(pin 8) internal is no use
0426 CN5 CHANGE COMPONENT
Should have a 0.1uF capacitor close to every GND-VCC pair + one larger cap on the supply.
SHBM=1: Enable shared memory with host BIOS
0413 R360 UNSTAFF
0426 BIOS SOCKET UNSTAFF
P/N : AKE34ZAP500
P/N : AKE34ZAPK01
P/N : AR0S72AC008
BIU configuration should match flash speed used
DEBUG PORT
0426 U40 PIN 156 CONTACT TO Q78 PIN 3
REV:CMODIFY
FOR 97551 ONLY
BATTERY LED:
1.GREEN: ACIN
2.ORANGE:
POWER ON
0502 U12 CHANGE COMPONENT
0426 LED & RESISTOR UNSTAFF
PROJECT : LE1N
Quanta Computer Inc.
PC97551 & FLASH
Thursday, October 13, 2005

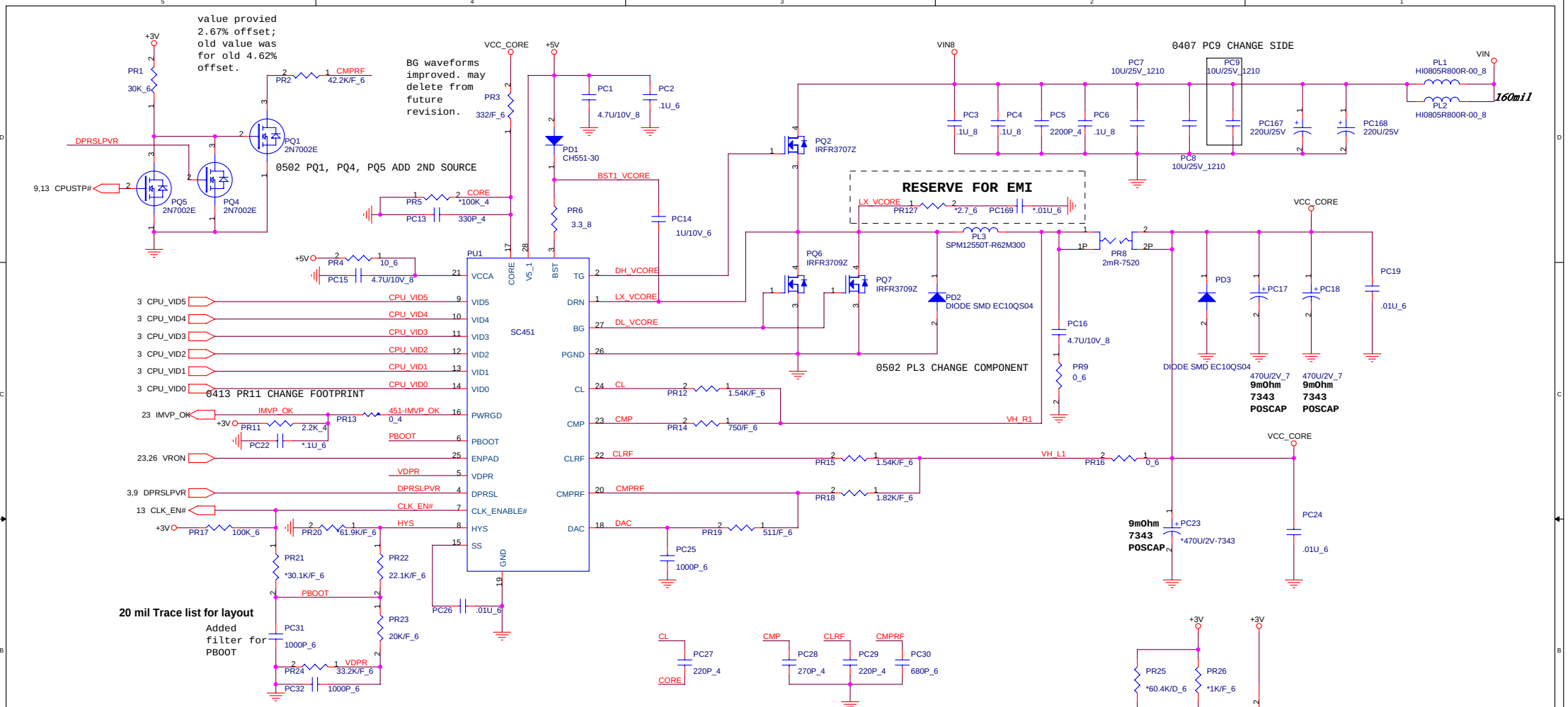

V I D						Vcore
VID 5	VID 4	VID 3	VID 2	VID 1	VID 0	V
0	1	0	1	1	1	1.340
0	1	1	0	0	0	1.324
0	1	1	0	1	0	1.292
0	1	1	1	0	0	1.260
0	1	1	1	0	1	1.244
0	1	1	1	1	1	1.212
1	0	0	0	0	1	1.180
1	0	0	0	1	1	1.148
1	0	0	1	1	0	1.100
1	0	1	0	0	1	1.052
1	0	1	0	1	1	1.020
1	0	1	1	1	0	0.972
1	1	0	0	0	0	0.940

PROJECT : LE1N
Quanta Computer Inc.

Size	Document Number	Rev
Custom	CPU CORE (SC451)	3B

Date: Thursday, October 13, 2005 Sheet 24 of 27

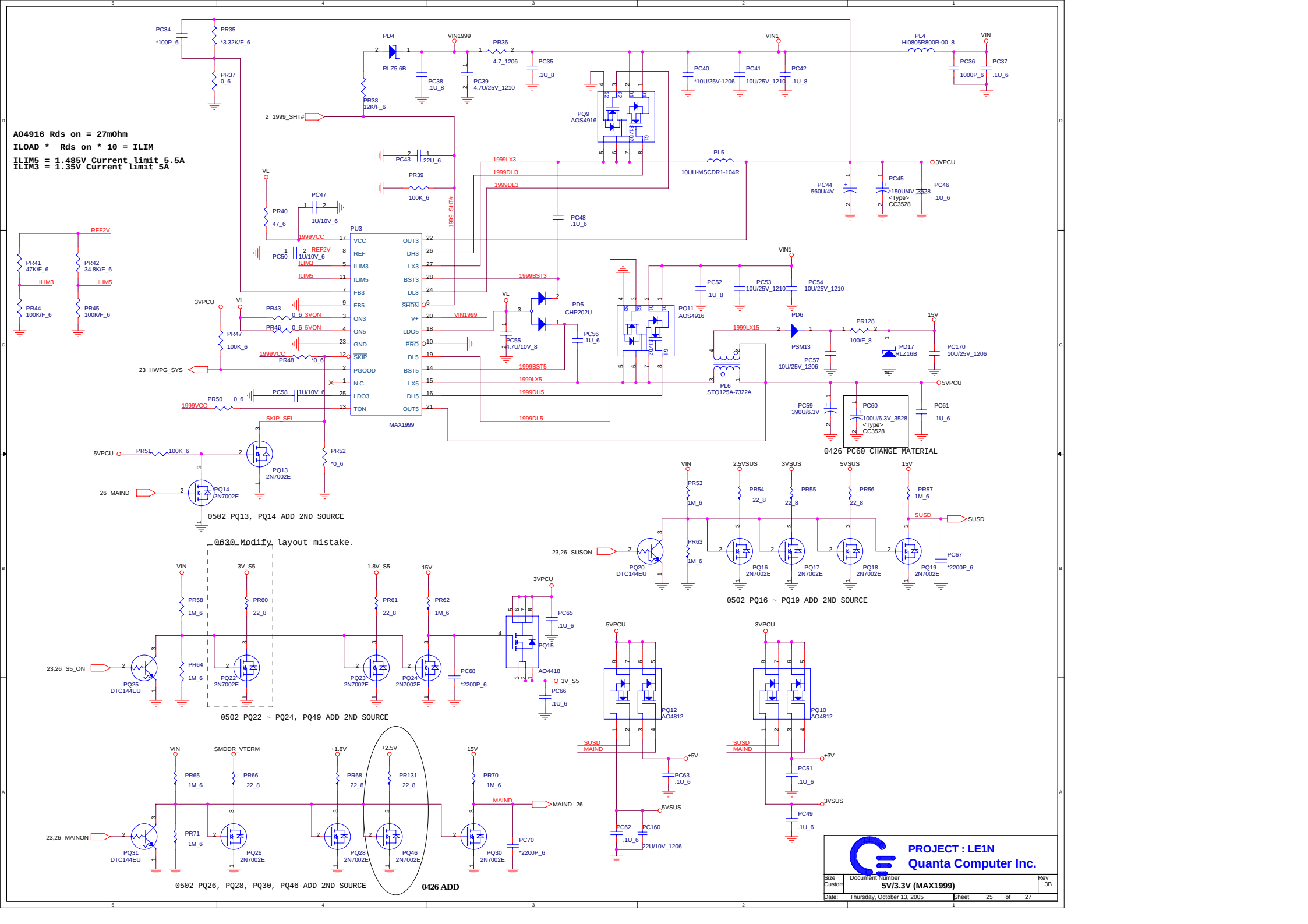
AO4916 Rds on = 27mOhm
ILOAD * Rds on * 10 = ILIM
ILIM5 = 1.485V Current limit 5.5A
ILIM3 = 1.35V Current limit 5A
PU3
MAX1999
PQ9 AOS4916
PQ11 AOS4916
PL5 10UH-MSCDR1-104R
PL6 STQ125A-7322A
PL4 HI0805R800R-00_8
PD5 CHP202U
PD6 PSM13
PD4 RLZ5.6B
PD17 RLZ16B
3VPCU
5VPCU
0426 PC60 CHANGE MATERIAL
0502 PQ13, PQ14 ADD 2ND SOURCE
0630 Modify layout mistake.
0502 PQ16 ~ PQ19 ADD 2ND SOURCE
0502 PQ22 ~ PQ24, PQ49 ADD 2ND SOURCE
0502 PQ26, PQ28, PQ30, PQ46 ADD 2ND SOURCE
0426 ADD
PROJECT : LE1N
Quanta Computer Inc.
Size Custom
Document Number
5V/3.3V (MAX1999)
Rev 3B
Date: Thursday, October 13, 2005
Sheet 25 of 27

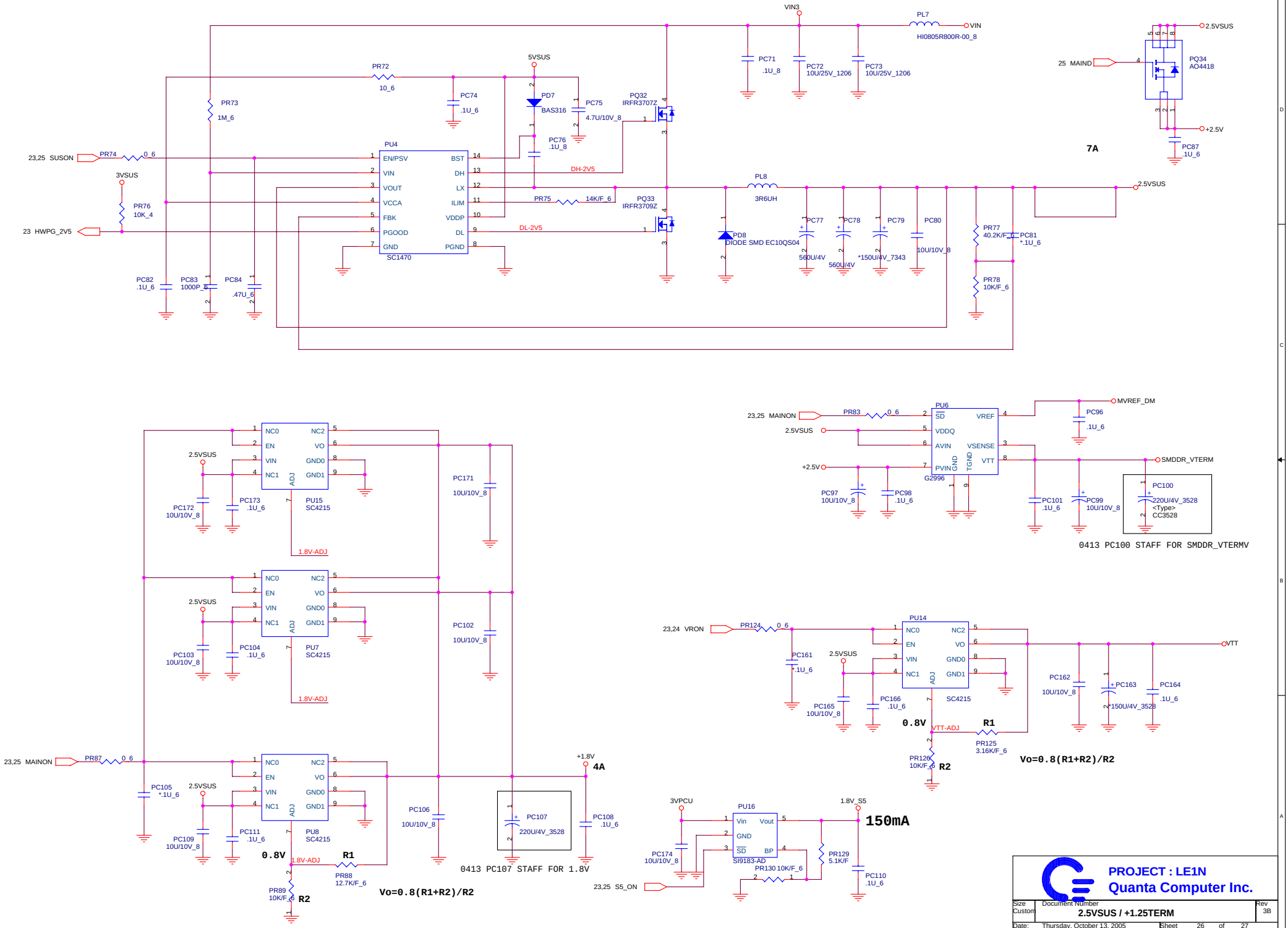
VIN3
PL7
HI0805R800R-00_8
VIN
PC71
.1U_8
PC72
10U/25V_1206
PC73
10U/25V_1206
5VSUS
PR72
10_6
PC74
.1U_6
PD7
BAS316
PC75
4.7U/10V_8
PQ32
IRFR3707Z
PC76
.1U_8
PR73
1M_6
PU4
23,25 SUSON
PR74
0_6
3VSUS
PR76
10K_4
23 HWPG_2V5
EN/PSV
VIN
VOUT
VCCA
FBK
PGOOD
GND
BST
DH
LX
ILIM
VDDP
DL
PGND
SC1470
DH-2V5
PR75
14K/F_6
PQ33
IRFR3709Z
DL-2V5
PL8
3R6UH
PD8
DIODE SMD EC10QS04
PC77
560U/4V
PC78
560U/4V
PC79
*150U/4V_7343
PC80
10U/10V_8
PR77
40.2K/F_6
PC81
*.1U_6
PR78
10K/F_6
2.5VSUS
PC82
.1U_6
PC83
1000P_6
PC84
.47U_6
25 MAIND
PQ34
AO4418
+2.5V
PC87
.1U_6
7A
23,25 MAINON
PR83
0_6
PU6
SD
VDDQ
AVIN
PVIN
VREF
VSENSE
VTT
GND
TGND
G2996
MVREF_DM
PC96
.1U_6
SMDDR_VTERM
PC97
10U/10V_8
PC98
.1U_6
PC101
.1U_6
PC99
10U/10V_8
PC100
220U/4V_3528
<Type>
CC3528
0413 PC100 STAFF FOR SMDDR_VTERMV
NC0
EN
VIN
NC1
NC2
VO
GND0
GND1
ADJ
PU15
SC4215
1.8V-ADJ
PC172
10U/10V_8
PC173
.1U_6
PC171
10U/10V_8
PU7
SC4215
PC103
10U/10V_8
PC104
.1U_6
PC102
10U/10V_8
23,25 MAINON
PR87
0_6
PC105
*.1U_6
PU8
SC4215
PC109
10U/10V_8
PC111
.1U_6
PC106
10U/10V_8
PC107
220U/4V_3528
0413 PC107 STAFF FOR 1.8V
+1.8V
4A
PC108
.1U_6
0.8V
R1
PR88
12.7K/F_6
PR89
10K/F_6
R2
Vo=0.8(R1+R2)/R2
23,24 VRON
PR124
0_6
PU14
PC161
*.1U_6
PC165
10U/10V_8
PC166
.1U_6
SC4215
VTT-ADJ
PR125
3.16K/F_6
PR126
10K/F_6
PC162
10U/10V_8
PC163
*150U/4V_3528
PC164
.1U_6
VTT
0.8V
R1
R2
Vo=0.8(R1+R2)/R2
3VPCU
PU16
Vin
Vout
GND
SD
BP
SI9183-AD
PC174
10U/10V_8
PR130 10K/F_6
PR129
5.1K/F
1.8V_S5
150mA
PC110
.1U_6
23,25 S5_ON
PROJECT : LE1N
Quanta Computer Inc.
Size
Custom
Document Number
2.5VSUS / +1.25TERM
Rev
3B
Date: Thursday, October 13, 2005
Sheet 26 of 27

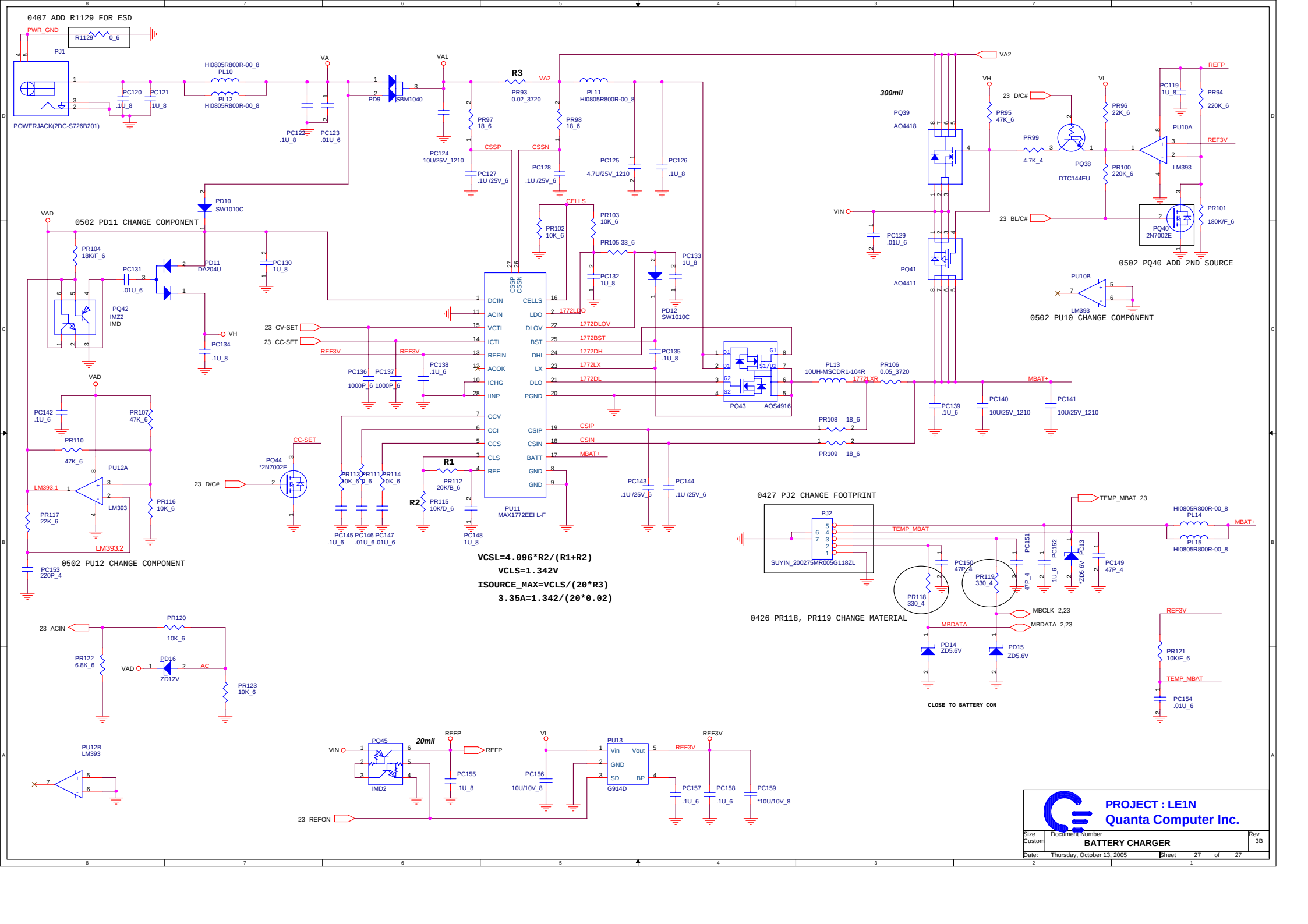
0407 ADD R1129 FOR ESD
PWR_GND
R1129 0_6
PJ1
POWERJACK(2DC-S726B201)
HI0805R800R-00_8
PL10
PL12
PC120 .1U_8
PC121 .1U_8
PC122 .1U_8
PC123 .01U_6
VA
VA1
PD9 SBM1040
R3
PR93 0.02_3720
VA2
PL11 HI0805R800R-00_8
PR97 18_6
PR98 18_6
CSSP
CSSN
PC124 10U/25V_1210
PC127 .1U /25V_6
PC128 .1U /25V_6
PC125 4.7U/25V_1210
PC126 .1U_8
300mil
PQ39 AO4418
PR95 47K_6
23 D/C#
PR96 22K_6
PR99 4.7K_4
PQ38 DTC144EU
PR100 220K_6
PC119 .1U_8
REFP
PR94 220K_6
PU10A
REF3V
LM393
PR101 180K/F_6
PQ40 2N7002E
0502 PQ40 ADD 2ND SOURCE
VH
VL
VIN
23 BL/C#
PC129 .01U_6
PQ41 AO4411
PU10B
LM393
0502 PU10 CHANGE COMPONENT
VAD
0502 PD11 CHANGE COMPONENT
PD10 SW1010C
PR104 18K/F_6
PC131 .01U_6
PD11 DA204U
PC130 1U_8
PQ42 IMZ2 IMD
PC134 .1U_8
CELLS
PR102 10K_6
PR103 10K_6
PR105 33_6
PC132 1U_8
PC133 1U_8
PD12 SW1010C
PC135 .1U_8
23 CV-SET
23 CC-SET
REF3V
PC136 1000P_6
PC137 1000P_6
PC138 .1U_6
DCIN
ACIN
VCTL
iCTL
REFIN
ACOK
iCHG
IINP
CCV
CCI
CCS
CLS
REF
CELLS
LDO
DLOV
BST
DHI
LX
DLO
PGND
CSIP
CSIN
BATT
GND
GND
1772LDO
1772DLOV
1772BST
1772DH
1772LX
1772DL
CSIP
CSIN
MBAT+
PU11 MAX1772EEI L-F
PQ43 AOS4916
PL13 10UH-MSCDR1-104R
PR106 0.05_3720
1772LXR
MBAT+
PC139 .1U_6
PC140 10U/25V_1210
PC141 10U/25V_1210
PR108 18_6
PR109 18_6
PC142 .1U_6
PR107 47K_6
PR110 47K_6
PU12A
LM393.1
LM393
PR116 10K_6
PR117 22K_6
LM393.2
PC153 220P_4
0502 PU12 CHANGE COMPONENT
CC-SET
PQ44 *2N7002E
23 D/C#
PR113 10K_6
PR111 9_6
PR114 10K_6
R1
PR112 20K/B_6
R2
PR115 10K/D_6
PC145 .1U_6
PC146 .01U_6
PC147 .01U_6
PC148 1U_8
PC143 .1U /25V_6
PC144 .1U /25V_6
VCSL=4.096*R2/(R1+R2)
VCLS=1.342V
ISOURCE_MAX=VCLS/(20*R3)
3.35A=1.342/(20*0.02)
0427 PJ2 CHANGE FOOTPRINT
PJ2
SUYIN_200275MR005G118ZL
TEMP_MBAT
TEMP_MBAT 23
HI0805R800R-00_8
PL14
PL15
MBAT+
PC150 47P_4
PR119 330_4
PR118 330_4
PC151 47P_4
PC152 .1U_6
PD13 *ZD5.6V
PC149 47P_4
0426 PR118, PR119 CHANGE MATERIAL
MBCLK 2,23
MBDATA 2,23
MBDATA
PD14 ZD5.6V
PD15 ZD5.6V
CLOSE TO BATTERY CON
REF3V
PR121 10K/F_6
TEMP_MBAT
PC154 .01U_6
23 ACIN
PR120 10K_6
PR122 6.8K_6
PD16 ZD12V
AC
PR123 10K_6
PU12B LM393
PQ45 IMD2
20mil
REFP
PC155 .1U_8
23 REFON
VL
PC156 10U/10V_8
PU13 G914D
Vin
Vout
GND
SD
BP
REF3V
PC157 .1U_6
PC158 .1U_6
PC159 *10U/10V_8
PROJECT : LE1N
Quanta Computer Inc.
Size Custom
Document Number
BATTERY CHARGER
Rev 3B
Date: Thursday, October 13, 2005
Sheet 27 of 27