Cheela 2.0

Pre-MV

2007.06.15

DATE	CHANGE NO.	REV

	EE	DATE	POWER	DATE
DRAWER				
DESIGN				
CHECK				
RESPONSIBLE				

SIZE = 3 VER :

FILE NAME : XXXX-XXXXXX-XX

P/N XXXXXXXXXXXX

INVENTEC

TITLE *CHEELA 2.0*

SIZE	CODE	DOC. NUMBER	REV
A3	CS	*1310A2128301*	*A01*

SHEET 1 OF 59

TABLE OF CONTENTS

PAGE

MAINBOARD

1.COVER PAGE
2.INDEX
3.BLOCK DIAGRAM
4.POWER SEQUENCE BLOCK
5-12.SYSTEM POWER
13.CLOCK GENERATOR
14-17.CPU Merom
18.FAN & THERMAL CONTROLLER
19-25.N/B Calistoga
26.DDR2 DIMM0
27.DDR2 DIMM1
28.DDR DAMPING
29.MXM CONN
30.CRT CONN
31.SVIDEO & HDMI & DVI CONN
32.LCD CONN
33-37.S/B ICH8
38.ROBSON TECH
39.CARDBUS CONTROLLER
40.PCMCIA & EXPRESS CARD

PAGE

41.6 IN 1 CARD SLOT
42.1394 CONTROLLER
43.LAN CONTROLLER
44.RJ45 & TRANSFORMER
45.MINI CARD CONN
46.RAID CONTROLLER
47.ODD & HDD CONN
48.USB CONN
49.BLUE TOOTH CONN
50.KBC
51.SUPER I/O(FIR)
52.CODEC
53.AUDIO AMP
54.TV CONN & DC IN
55.SCREW
56.TO OTHER BOARD CONN
57.HOTKEY BOARD
58.MEDIA BOARD
59.TOUCH PAD BUTTON BOARD

PAGE

I/O BOARD

1.USB CONN
2.MDC CONN
3.PRT & COM PORT CONN

AUDIO BOARD

1.IR/CIR
2.AUDIO JACKS
3.BT&WIRELESS SW

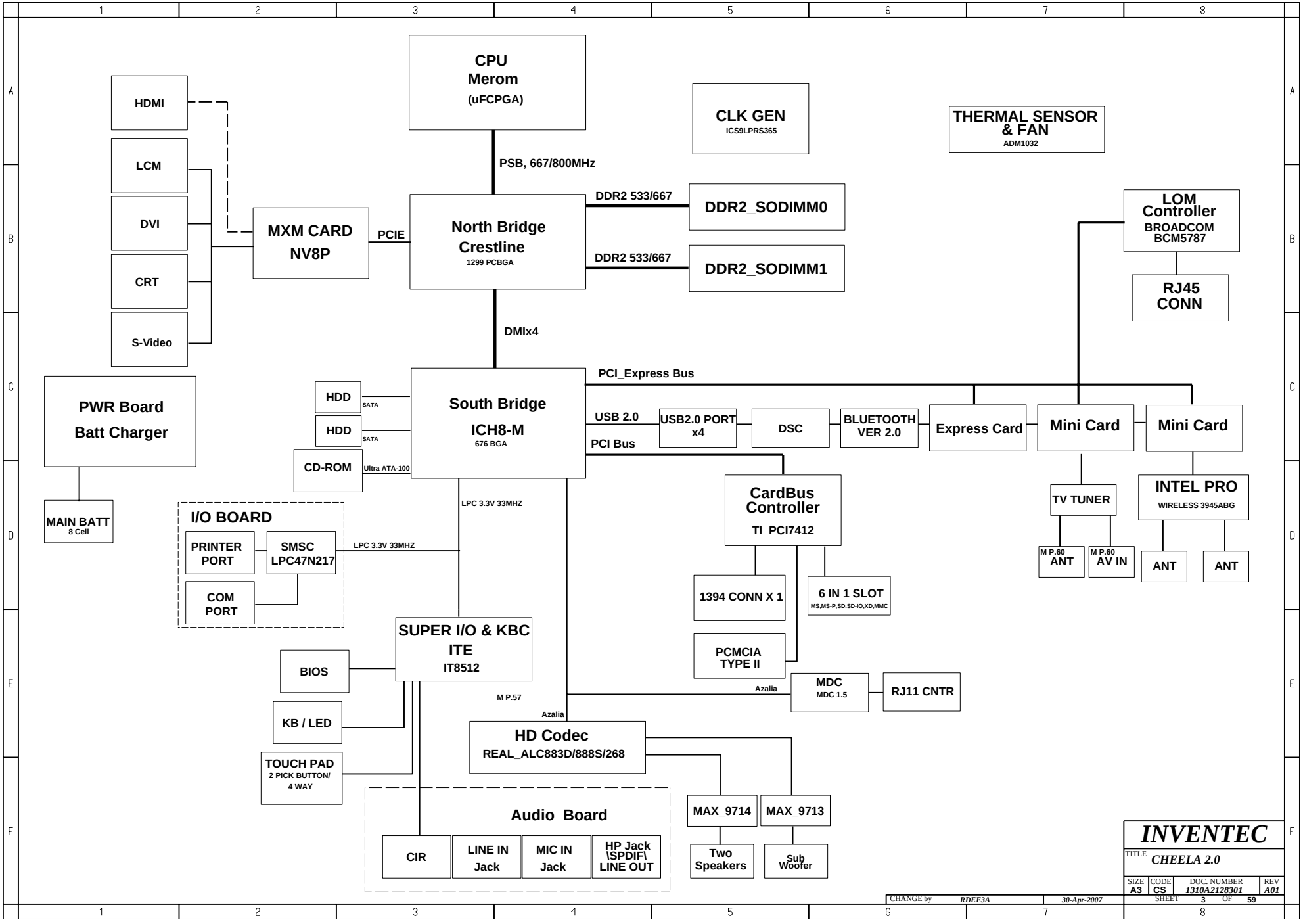
CPU
Merom
(uFCPGA)
CLK GEN
ICS9LPRS365
THERMAL SENSOR
& FAN
ADM1032
HDMI
LCM
DVI
CRT
S-Video
MXM CARD
NV8P
PCIE
PSB, 667/800MHz
North Bridge
Crestline
1299 PCBGA
DDR2 533/667
DDR2_SODIMM0
DDR2 533/667
DDR2_SODIMM1
LOM
Controller
BROADCOM
BCM5787
RJ45
CONN
DMIx4
PWR Board
Batt Charger
MAIN BATT
8 Cell
HDD
SATA
HDD
SATA
CD-ROM
Ultra ATA-100
South Bridge
ICH8-M
676 BGA
PCI_Express Bus
USB 2.0
USB2.0 PORT
x4
DSC
BLUETOOTH
VER 2.0
Express Card
Mini Card
Mini Card
PCI Bus
CardBus
Controller
TI PCI7412
TV TUNER
INTEL PRO
WIRELESS 3945ABG
M P.60
ANT
M P.60
AV IN
ANT
ANT
LPC 3.3V 33MHZ
I/O BOARD
PRINTER
PORT
SMSC
LPC47N217
LPC 3.3V 33MHZ
COM
PORT
1394 CONN X 1
6 IN 1 SLOT
MS,MS-P,SD.SD-IO,XD,MMC
PCMCIA
TYPE II
SUPER I/O & KBC
ITE
IT8512
BIOS
KB / LED
TOUCH PAD
2 PICK BUTTON/
4 WAY
M P.57
Azalia
MDC
MDC 1.5
RJ11 CNTR
Azalia
HD Codec
REAL_ALC883D/888S/268
MAX_9714
MAX_9713
Two
Speakers
Sub
Woofer
Audio Board
CIR
LINE IN
Jack
MIC IN
Jack
HP Jack
\SPDIF\
LINE OUT
INVENTEC
TITLE
CHEELA 2.0
SIZE
A3
CODE
CS
DOC. NUMBER
1310A2128301
REV
A01
SHEET
3
OF
59
CHANGE by
RDEE3A
30-Apr-2007

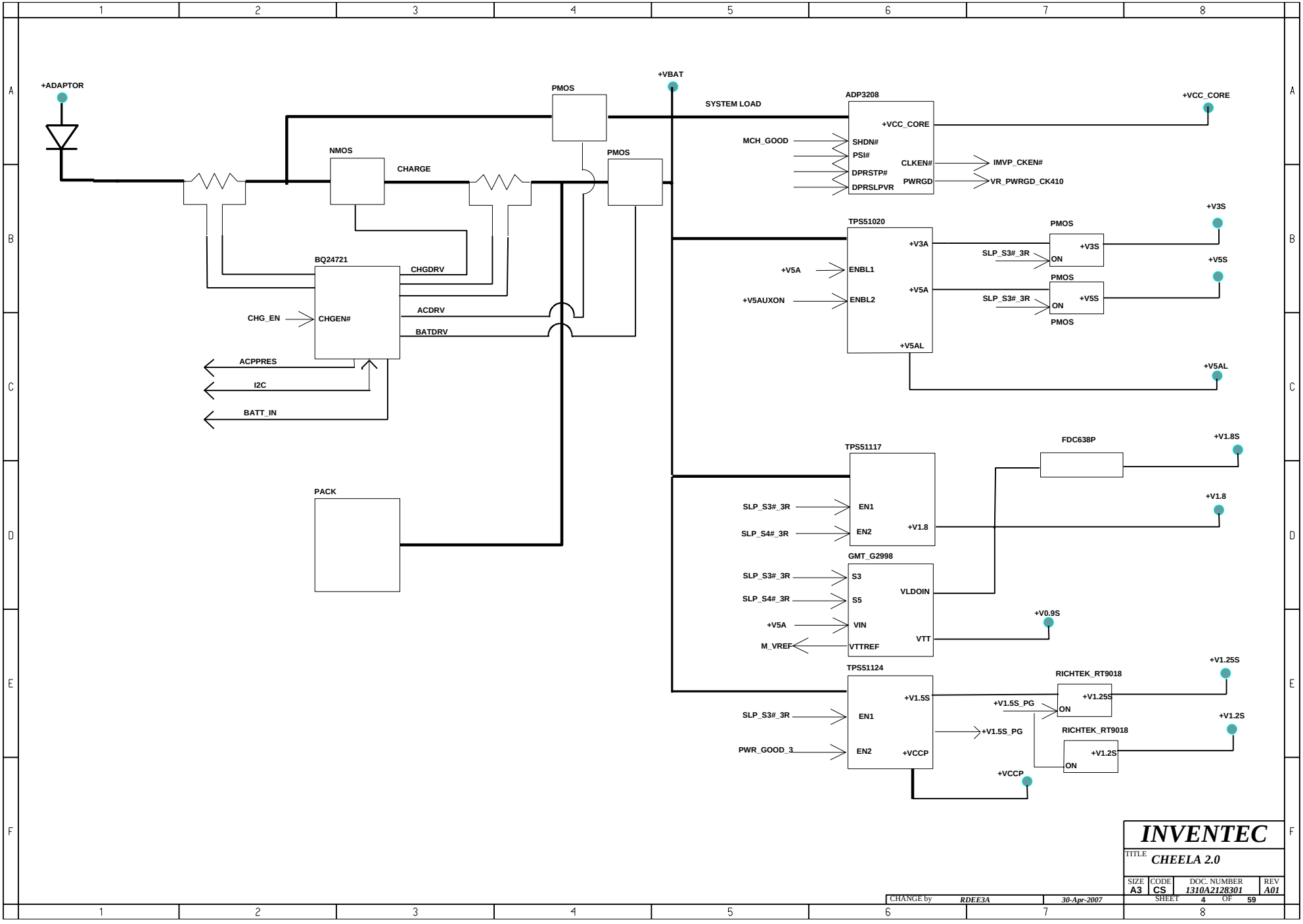
+ADAPTOR
PMOS
+VBAT
SYSTEM LOAD
ADP3208
+VCC_CORE
+VCC_CORE
MCH_GOOD
SHDN#
PSI#
DPRSTP#
DPRSLPVR
CLKEN#
PWRGD
IMVP_CKEN#
VR_PWRGD_CK410
NMOS
CHARGE
PMOS
TPS51020
+V3A
+V5A
ENBL1
ENBL2
+V5AL
PMOS
SLP_S3#_3R
ON
+V3S
+V3S
PMOS
SLP_S3#_3R
ON
+V5S
+V5S
+V5AL
BQ24721
CHGDRV
CHG_EN
CHGEN#
ACDRV
BATDRV
ACPPRES
I2C
BATT_IN
PACK
TPS51117
EN1
EN2
+V1.8
FDC638P
+V1.8S
+V1.8
SLP_S3#_3R
SLP_S4#_3R
GMT_G2998
S3
S5
VIN
VTTREF
VLDOIN
VTT
SLP_S3#_3R
SLP_S4#_3R
+V5A
M_VREF
+V0.9S
TPS51124
EN1
EN2
+V1.5S
+VCCP
SLP_S3#_3R
PWR_GOOD_3
+V1.5S_PG
RICHTEK_RT9018
+V1.25S
ON
+V1.5S_PG
+V1.25S
RICHTEK_RT9018
+V1.2S
ON
+V1.2S
+VCCP
INVENTEC
TITLE
CHEELA 2.0
SIZE
A3
CODE
CS
DOC. NUMBER
1310A2128301
REV
A01
CHANGE by
RDEE3A
30-Apr-2007
SHEET
4
OF
59

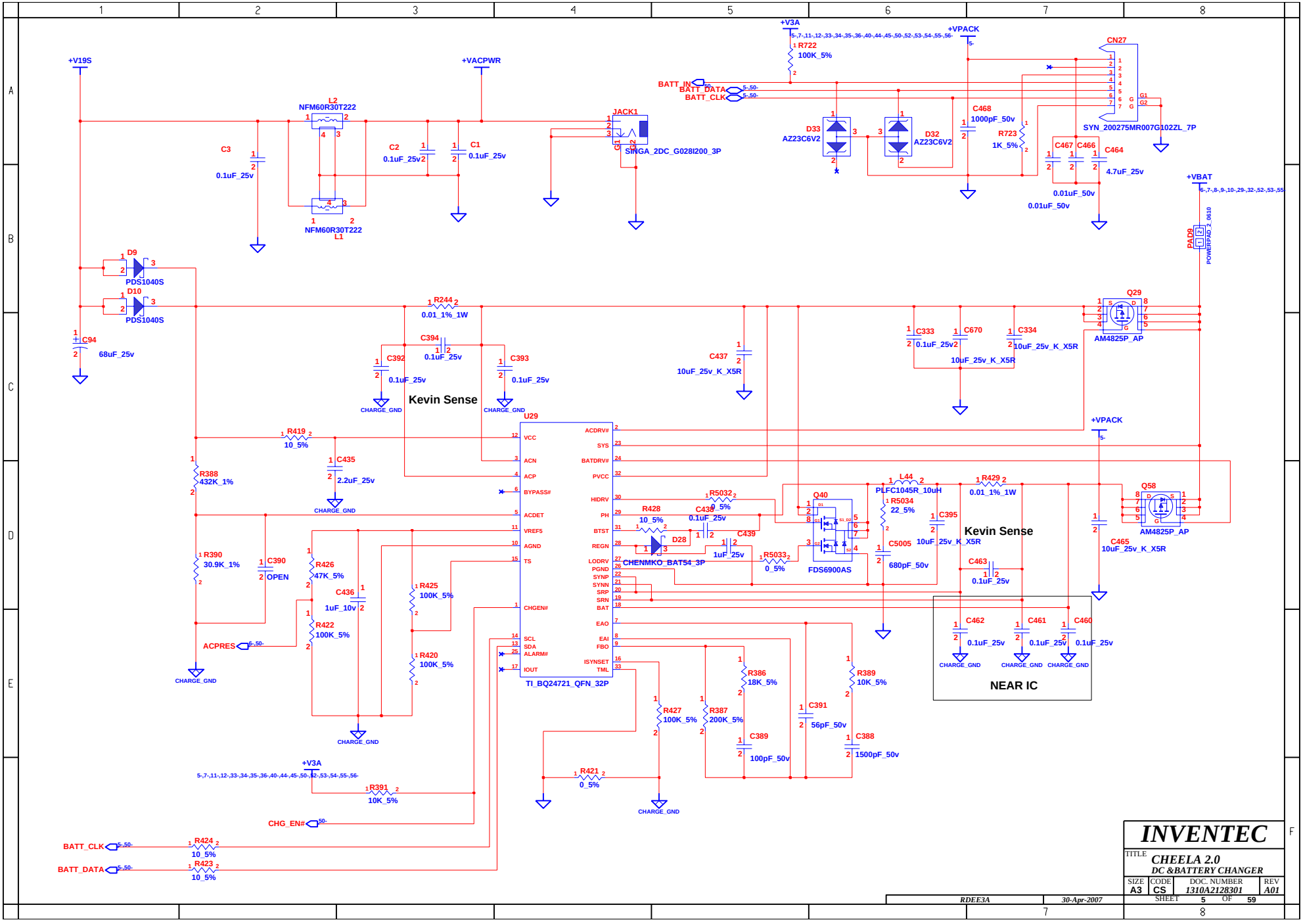
+V19S
+VACPWR
L2
NFM60R30T222
L1
NFM60R30T222
C3
0.1uF_25v
C2
0.1uF_25v
C1
0.1uF_25v
JACK1
SINGA_2DC_G028I200_3P
+V3A
R722
100K_5%
+VPACK
CN27
SYN_200275MR007G102ZL_7P
BATT_IN
BATT_DATA
BATT_CLK
D33
AZ23C6V2
D32
AZ23C6V2
C468
1000pF_50v
R723
1K_5%
C467
C466
C464
4.7uF_25v
0.01uF_50v
0.01uF_50v
+VBAT
PAD9
POWERPAD_2_0610
D9
PDS1040S
D10
PDS1040S
C94
68uF_25v
R244
0.01_1%_1W
C394
0.1uF_25v
C392
0.1uF_25v
C393
0.1uF_25v
CHARGE_GND
Kevin Sense
C437
10uF_25v_K_X5R
C333
0.1uF_25v
C670
10uF_25v_K_X5R
C334
10uF_25v_K_X5R
Q29
AM4825P_AP
U29
VCC
ACN
ACP
BYPASS#
ACDET
VREF5
AGND
TS
CHGEN#
SCL
SDA
ALARM#
IOUT
ACDRV#
SYS
BATDRV#
PVCC
HIDRV
PH
BTST
REGN
LODRV
PGND
SYNP
SYNN
SRP
SRN
BAT
EAO
EAI
FBO
ISYNSET
TML
TI_BQ24721_QFN_32P
R419
10_5%
C435
2.2uF_25v
R388
432K_1%
R390
30.9K_1%
C390
OPEN
R426
47K_5%
C436
1uF_10v
R422
100K_5%
R425
100K_5%
R420
100K_5%
ACPRES
R428
10_5%
D28
CHENMKO_BAT54_3P
C438
0.1uF_25v
C439
1uF_25v
R5032
0_5%
R5033
0_5%
Q40
FDS6900AS
L44
PLFC1045R_10uH
R5034
22_5%
C5005
680pF_50v
C395
10uF_25v_K_X5R
R429
0.01_1%_1W
Kevin Sense
C463
0.1uF_25v
Q58
AM4825P_AP
C465
10uF_25v_K_X5R
C462
0.1uF_25v
C461
0.1uF_25v
C460
0.1uF_25v
NEAR IC
R386
18K_5%
R389
10K_5%
R427
100K_5%
R387
200K_5%
C389
100pF_50v
C391
56pF_50v
C388
1500pF_50v
R421
0_5%
R391
10K_5%
CHG_EN#
BATT_CLK
BATT_DATA
R424
10_5%
R423
10_5%
INVENTEC
TITLE
CHEELA 2.0
DC &BATTERY CHANGER
SIZE A3
CODE CS
DOC. NUMBER 1310A2128301
REV A01
SHEET 5 OF 59
RDEE3A
30-Apr-2007

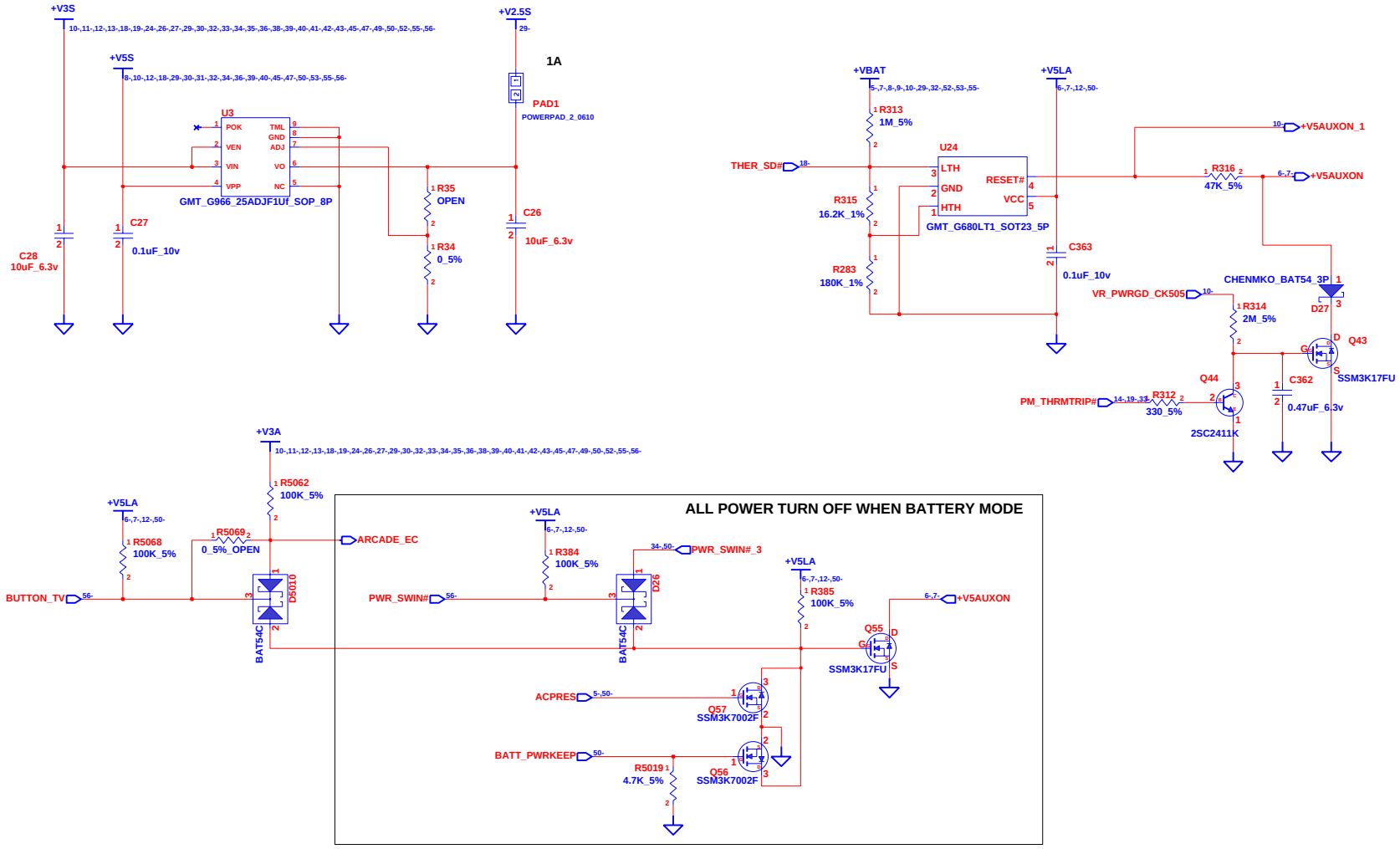

INVENTEC

TITLE **CHEELA 2.0**
+V2.5S / RESET

SIZE	CODE	DOC. NUMBER	REV
A3	CS	1310A2128301	A01

SHEET 6 OF 59

CHANGE by RDEE3A 15-Jun-2007

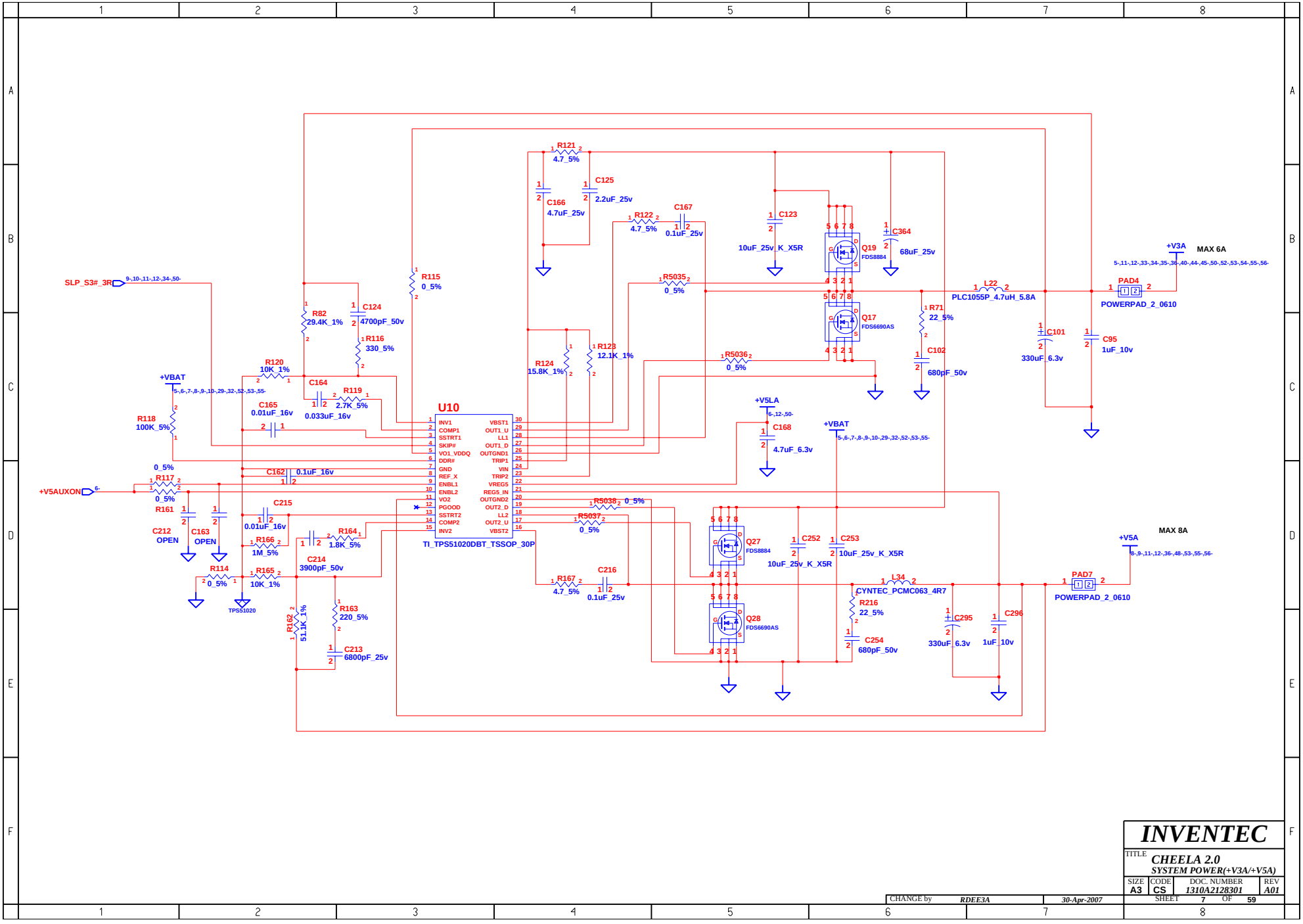
U10
TI_TPS51020DBT_TSSOP_30P
INV1
COMP1
SSTRT1
SKIP#
VO1_VDDQ
DDR#
GND
REF_X
ENBL1
ENBL2
VO2
PGOOD
SSTRT2
COMP2
INV2
VBST1
OUT1_U
LL1
OUT1_D
OUTGND1
TRIP1
VIN
TRIP2
VREG5
REG5_IN
OUTGND2
OUT2_D
LL2
OUT2_U
VBST2
SLP_S3#_3R
+V5AUXON
+VBAT
+V5LA
+V3A
MAX 6A
+V5A
MAX 8A
PAD4
POWERPAD_2_0610
PAD7
POWERPAD_2_0610
Q19 FDS8884
Q17 FDS6690AS
Q27 FDS8884
Q28 FDS6690AS
L22 PLC1055P_4.7uH_5.8A
L34 CYNTEC_PCMC063_4R7
R121 4.7_5%
R122 4.7_5%
R123 12.1K_1%
R124 15.8K_1%
R115 0_5%
R82 29.4K_1%
R116 330_5%
R120 10K_1%
R119 2.7K_5%
R118 100K_5%
R117 0_5%
R161 0_5%
R114 0_5%
R165 10K_1%
R166 1M_5%
R164 1.8K_5%
R162 51.1K_1%
R163 220_5%
R167 4.7_5%
R216 22_5%
R71 22_5%
R5035 0_5%
R5036 0_5%
R5038 0_5%
R5037 0_5%
C166 4.7uF_25v
C125 2.2uF_25v
C167 0.1uF_25v
C123 10uF_25v_K_X5R
C364 68uF_25v
C124 4700pF_50v
C164 0.033uF_16v
C165 0.01uF_16v
C162 0.1uF_16v
C212 OPEN
C163 OPEN
C215 0.01uF_16v
C214 3900pF_50v
C213 6800pF_25v
C216 0.1uF_25v
C168 4.7uF_6.3v
C252 10uF_25v_K_X5R
C253 10uF_25v_K_X5R
C254 680pF_50v
C295 330uF_6.3v
C296 1uF_10v
C101 330uF_6.3v
C95 1uF_10v
C102 680pF_50v
TPS51020
INVENTEC
TITLE
CHEELA 2.0
SYSTEM POWER(+V3A/+V5A)
SIZE A3
CODE CS
DOC. NUMBER 1310A2128301
REV A01
SHEET 7 OF 59
CHANGE by RDEE3A
30-Apr-2007

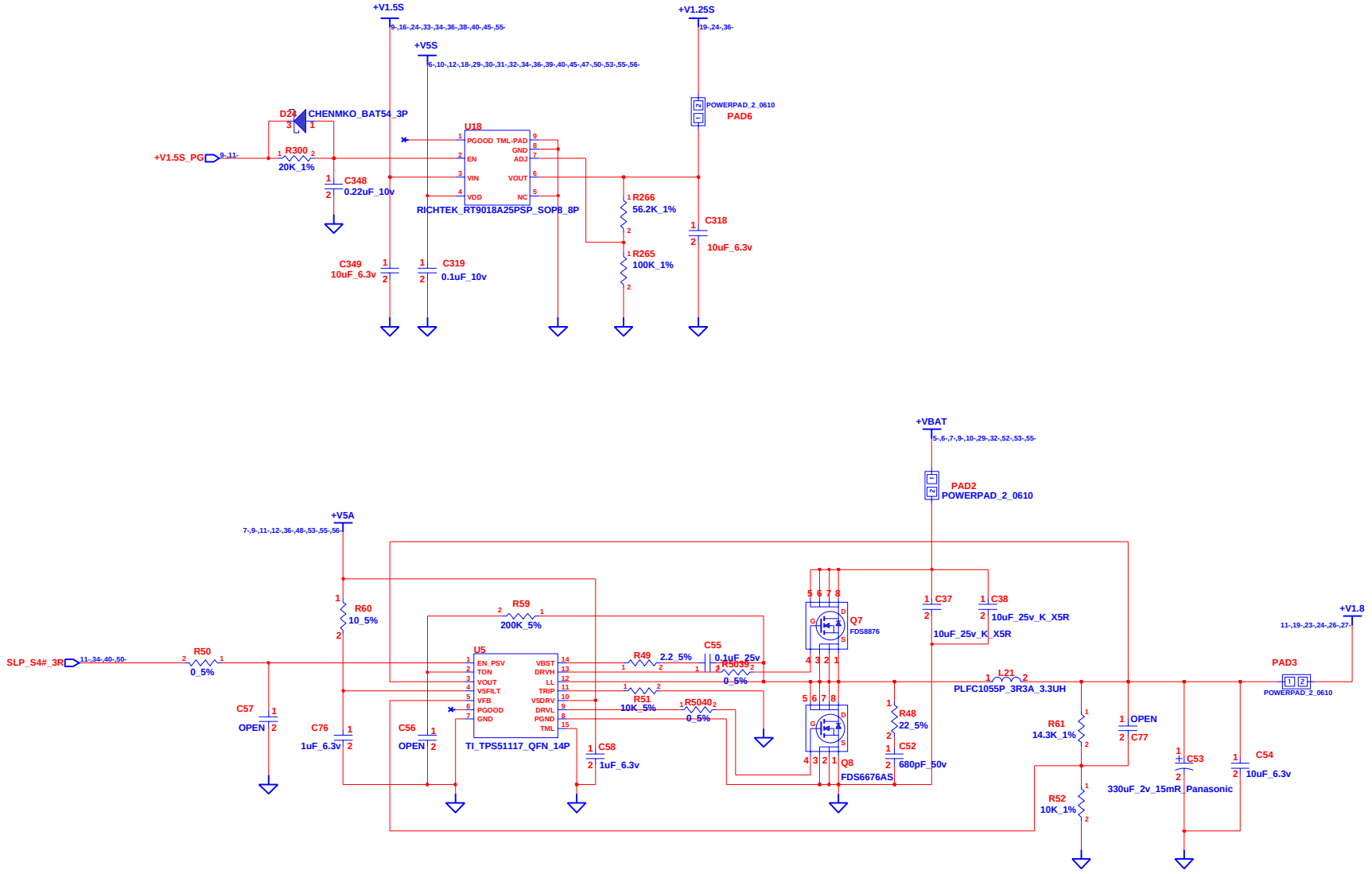

INVENTEC

TITLE
CHEELA 2.0
SYSTEM POWER (+V1.8 / +V1.25S)

SIZE	CODE	DOC. NUMBER	REV
A3	CS	1310A2128301	A01

CHANGE by RDEE3A 30-Apr-2007

SHEET 8 OF 59

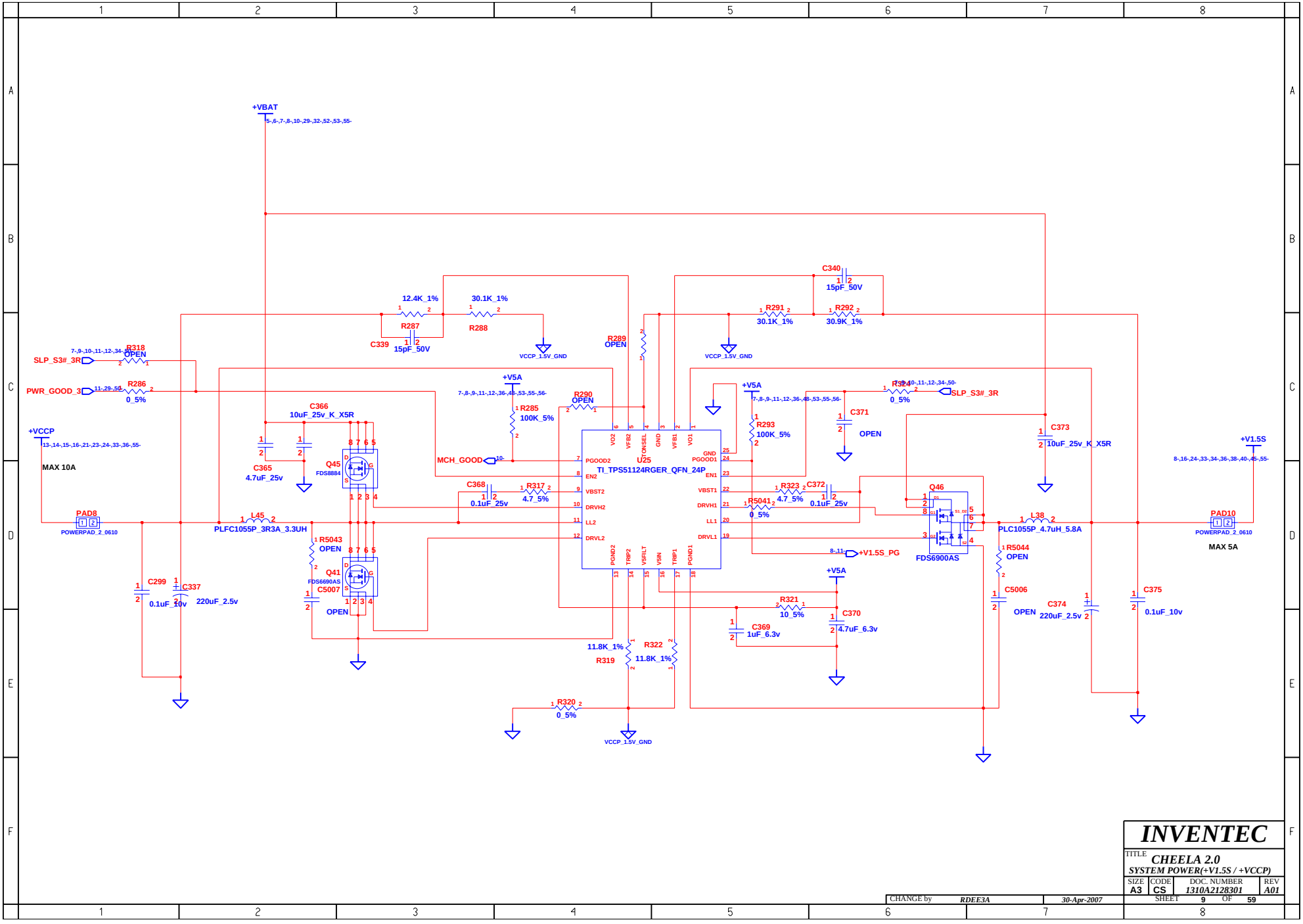

INVENTEC

TITLE
CHEELA 2.0
SYSTEM POWER(+V1.5S / +VCCP)

SIZE	CODE	DOC. NUMBER	REV
A3	CS	1310A2128301	A01

SHEET 9 OF 59

CHANGE by RDEE3A 30-Apr-2007

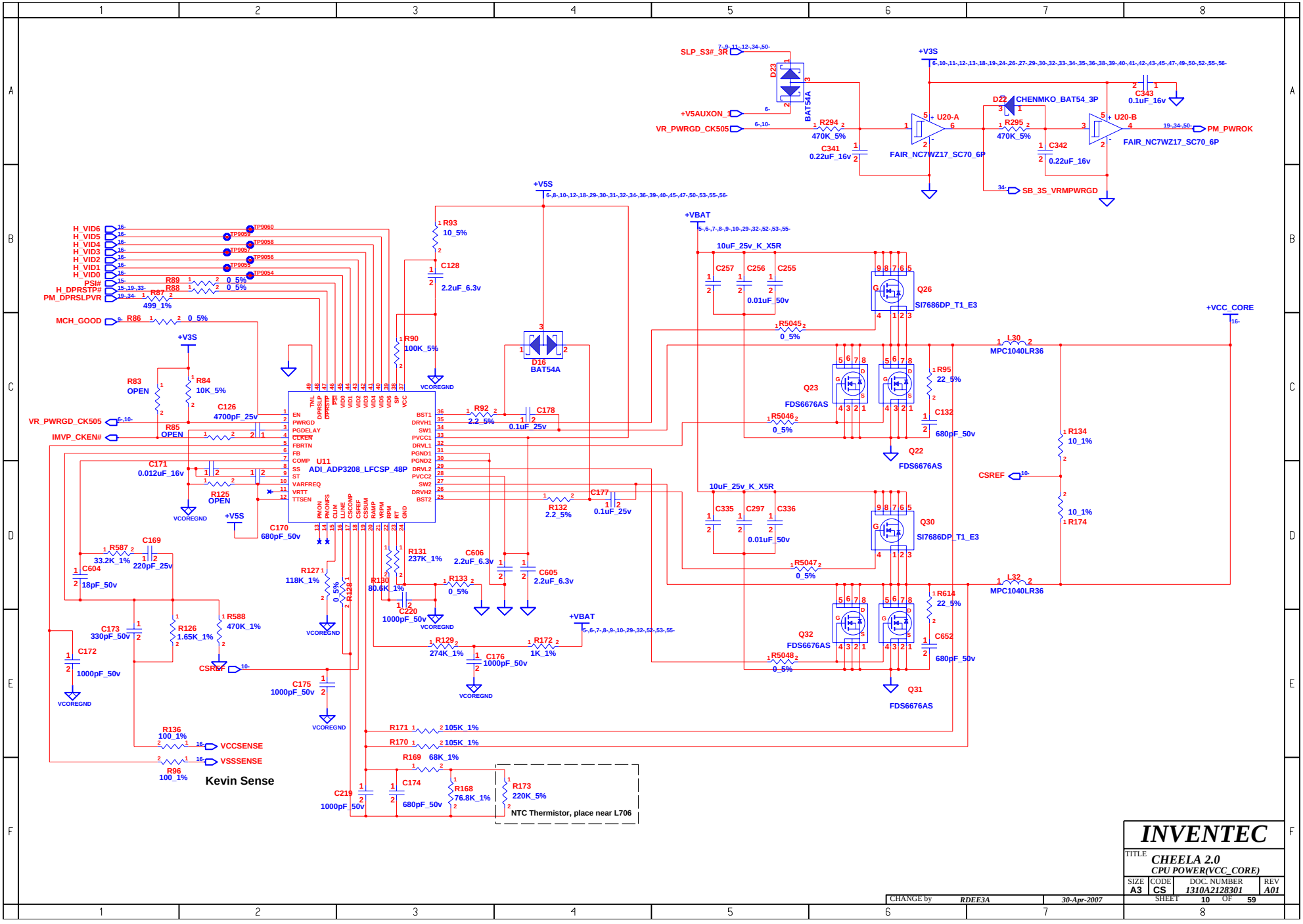
SLP_S3#_3R
D23
BAT54A
+V5AUXON_1
VR_PWRGD_CK505
R294
470K_5%
C341
0.22uF_16v
+V3S
U20-A
FAIR_NC7WZ17_SC70_6P
D22
CHENMKO_BAT54_3P
R295
470K_5%
C342
0.22uF_16v
U20-B
FAIR_NC7WZ17_SC70_6P
C343
0.1uF_16v
PM_PWROK
SB_3S_VRMPWRGD
+V5S
+VBAT
H_VID6
H_VID5
H_VID4
H_VID3
H_VID2
H_VID1
H_VID0
PSI#
H_DPRSTP#
PM_DPRSLPVR
MCH_GOOD
R89 0_5%
R88 0_5%
R87 499_1%
R86 0_5%
R93 10_5%
C128 2.2uF_6.3v
R90 100K_5%
D16 BAT54A
10uF_25v_K_X5R
C257
C256
C255
0.01uF_50v
Q26
SI7686DP_T1_E3
R5045 0_5%
L30 MPC1040LR36
+VCC_CORE
Q23
FDS6676AS
R95 22_5%
R5046 0_5%
C132 680pF_50v
Q22
FDS6676AS
R134 10_1%
CSREF
10_1% R174
R83 OPEN
R84 10K_5%
C126 4700pF_25v
VR_PWRGD_CK505
IMVP_CKEN#
R85 OPEN
C171 0.012uF_16v
R125 OPEN
VCOREGND
U11 ADI_ADP3208_LFCSP_48P
EN
PWRGD
PGDELAY
CLKEN
FBRTN
FB
COMP
SS
ST
VARFREQ
VRTT
TTSEN
TML
DPRSLP
DPRSTP
PSI
VID4
VID3
VID2
VID1
VID0
VCC
BST1
DRVH1
SW1
PVCC1
DRVL1
PGND1
PGND2
DRVL2
PVCC2
SW2
DRVH2
BST2
PMON
PMONFS
CLIN
LLINE
CSCOMP
CSREF
CSSUM
RAMP
VDRP
RPM
RT
GND
C170 680pF_50v
R92 2.2_5%
C178 0.1uF_25v
R132 2.2_5%
C177 0.1uF_25v
10uF_25v_K_X5R
C335
C297
C336
0.01uF_50v
Q30
SI7686DP_T1_E3
R5047 0_5%
L32 MPC1040LR36
R587 33.2K_1%
C169 220pF_25v
C604 18pF_50v
R127 118K_1%
R130 80.6K_1%
R131 237K_1%
C606 2.2uF_6.3v
C605 2.2uF_6.3v
R133 0_5%
C220 1000pF_50v
R614 22_5%
Q32
FDS6676AS
C652 680pF_50v
R5048 0_5%
Q31
FDS6676AS
C173 330pF_50v
R126 1.65K_1%
R588 470K_1%
C172 1000pF_50v
R129 274K_1%
R172 1K_1%
C176 1000pF_50v
C175 1000pF_50v
R171 105K_1%
R170 105K_1%
R169 68K_1%
R136 100_1%
VCCSENSE
VSSSENSE
R96 100_1%
Kevin Sense
C174 680pF_50v
R168 76.8K_1%
C219 1000pF_50v
R173 220K_5%
NTC Thermistor, place near L706
INVENTEC
TITLE
CHEELA 2.0
CPU POWER(VCC_CORE)
SIZE A3
CODE CS
DOC. NUMBER 1310A2128301
REV A01
SHEET 10 OF 59
CHANGE by RDEE3A
30-Apr-2007

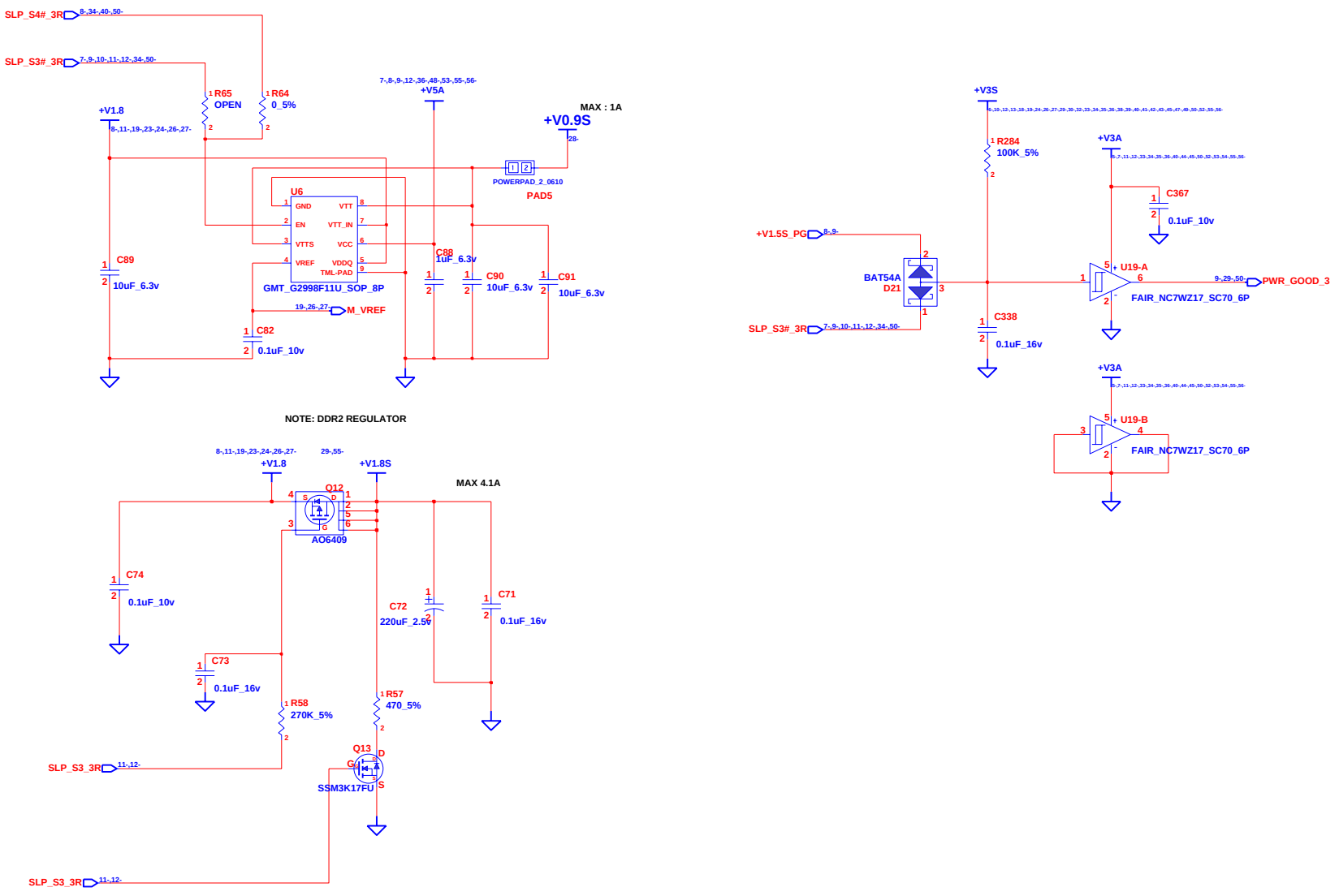

INVENTEC

TITLE **CHEELA 2.0**
+V0.9S / +V1.8S / POWER GOOD

SIZE	CODE	DOC. NUMBER	REV
A3	CS	1310A2128301	A01

SHEET 11 OF 59

CHANGE by RDEE3A 30-Apr-2007

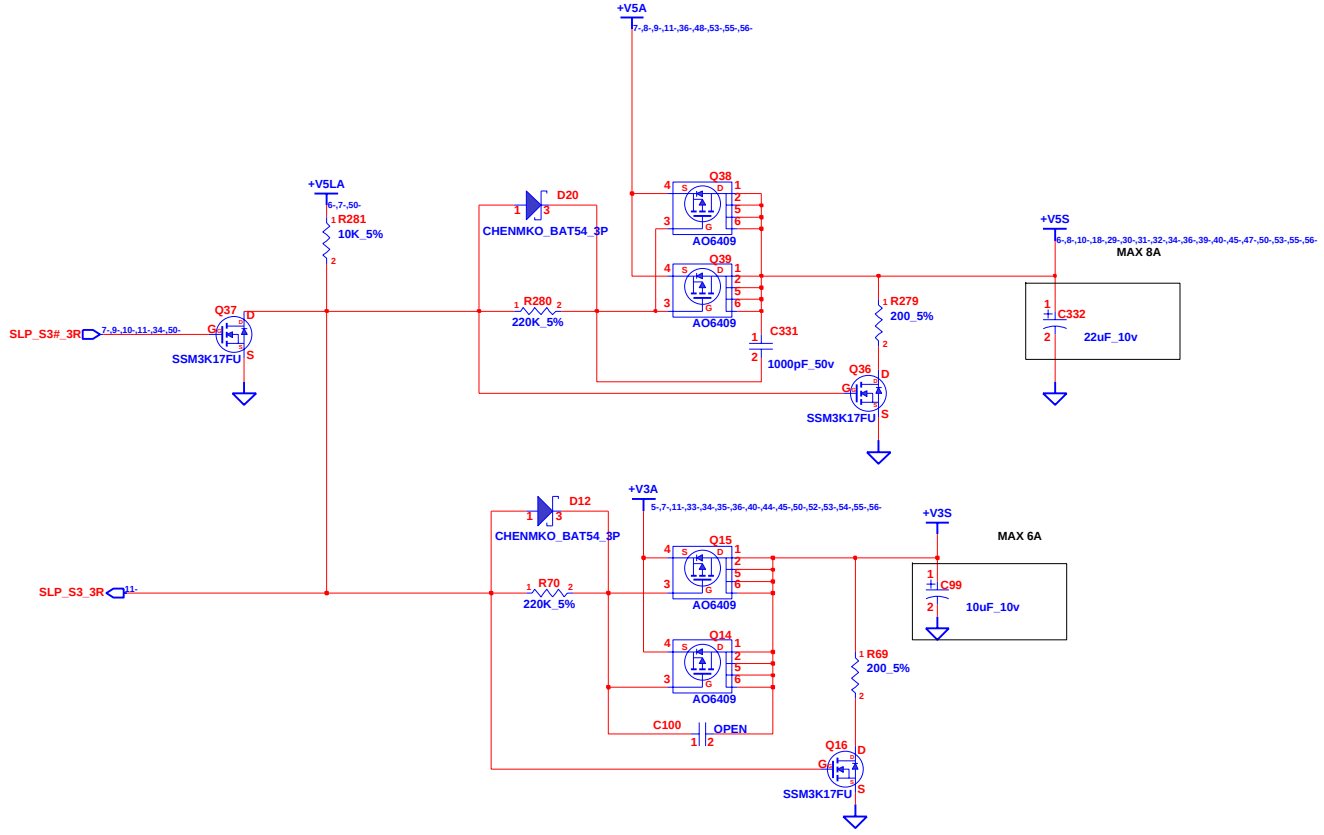

INVENTEC

TITLE **CHEELA 2.0**
POWER(+V3S / +V5S)

SIZE	CODE	DOC. NUMBER	REV
A3	CS	1310A2128301	A01

SHEET 12 OF 59

CHANGE by RDEE3A 30-Apr-2007

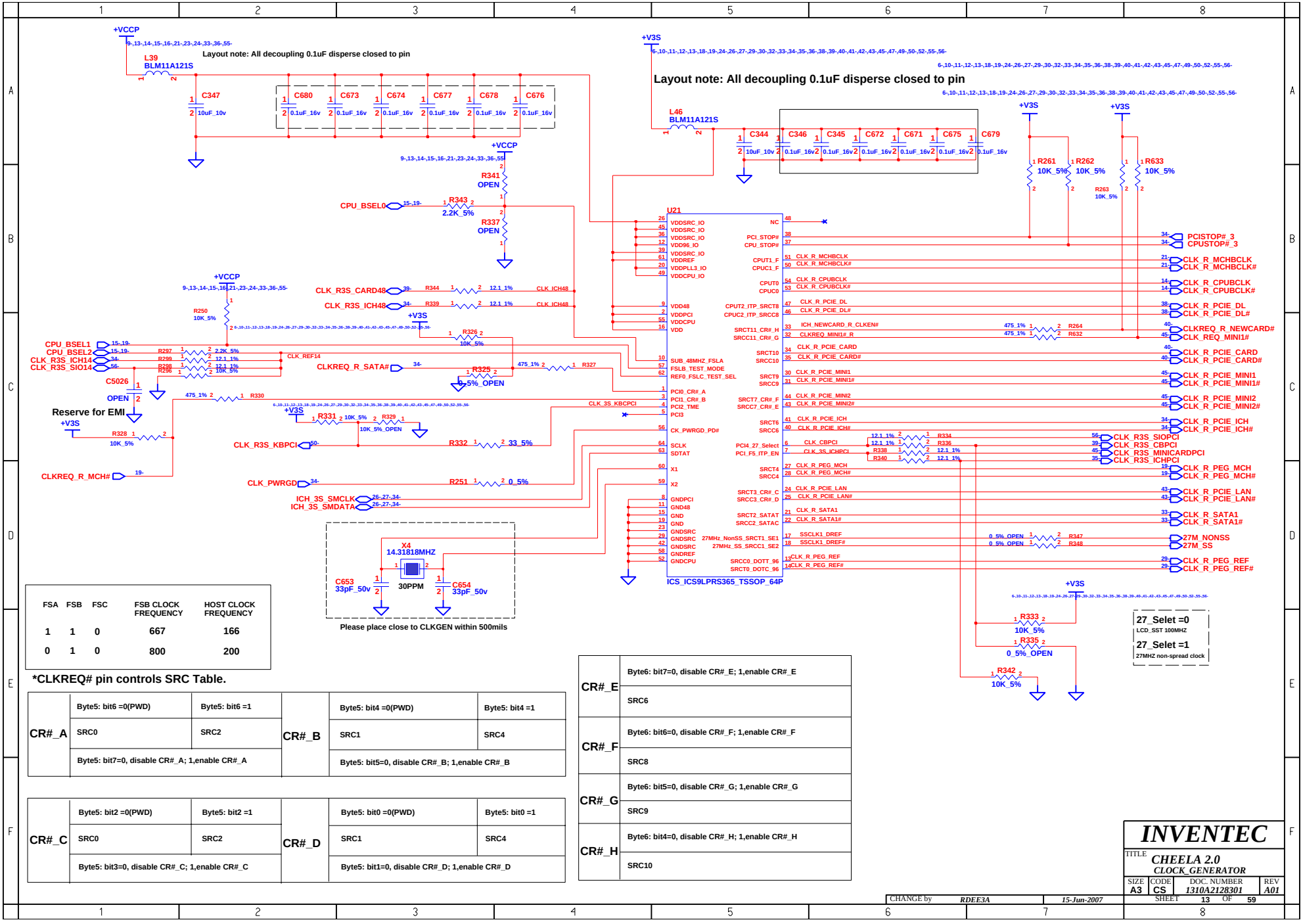

FSA	FSB	FSC	FSB CLOCK FREQUENCY	HOST CLOCK FREQUENCY
1	1	0	667	166
0	1	0	800	200

***CLKREQ# pin controls SRC Table.**

CR#_A	Byte5: bit6 =0(PWD)	Byte5: bit6 =1	CR#_B	Byte5: bit4 =0(PWD)	Byte5: bit4 =1
	SRC0	SRC2		SRC1	SRC4
	Byte5: bit7=0, disable CR#_A; 1,enable CR#_A			Byte5: bit5=0, disable CR#_B; 1,enable CR#_B	

CR#_C	Byte5: bit2 =0(PWD)	Byte5: bit2 =1	CR#_D	Byte5: bit0 =0(PWD)	Byte5: bit0 =1
	SRC0	SRC2		SRC1	SRC4
	Byte5: bit3=0, disable CR#_C; 1,enable CR#_C			Byte5: bit1=0, disable CR#_D; 1,enable CR#_D	

CR#_E	Byte6: bit7=0, disable CR#_E; 1,enable CR#_E
	SRC6
CR#_F	Byte6: bit6=0, disable CR#_F; 1,enable CR#_F
	SRC8
CR#_G	Byte6: bit5=0, disable CR#_G; 1,enable CR#_G
	SRC9
CR#_H	Byte6: bit4=0, disable CR#_H; 1,enable CR#_H
	SRC10

CHANGE by RDEE3A 15-Jun-2007

INVENTEC

TITLE *CHEELA 2.0*
CLOCK_GENERATOR

SIZE	CODE	DOC. NUMBER	REV
A3	CS	1310A2128301	A01

SHEET 13 OF 59

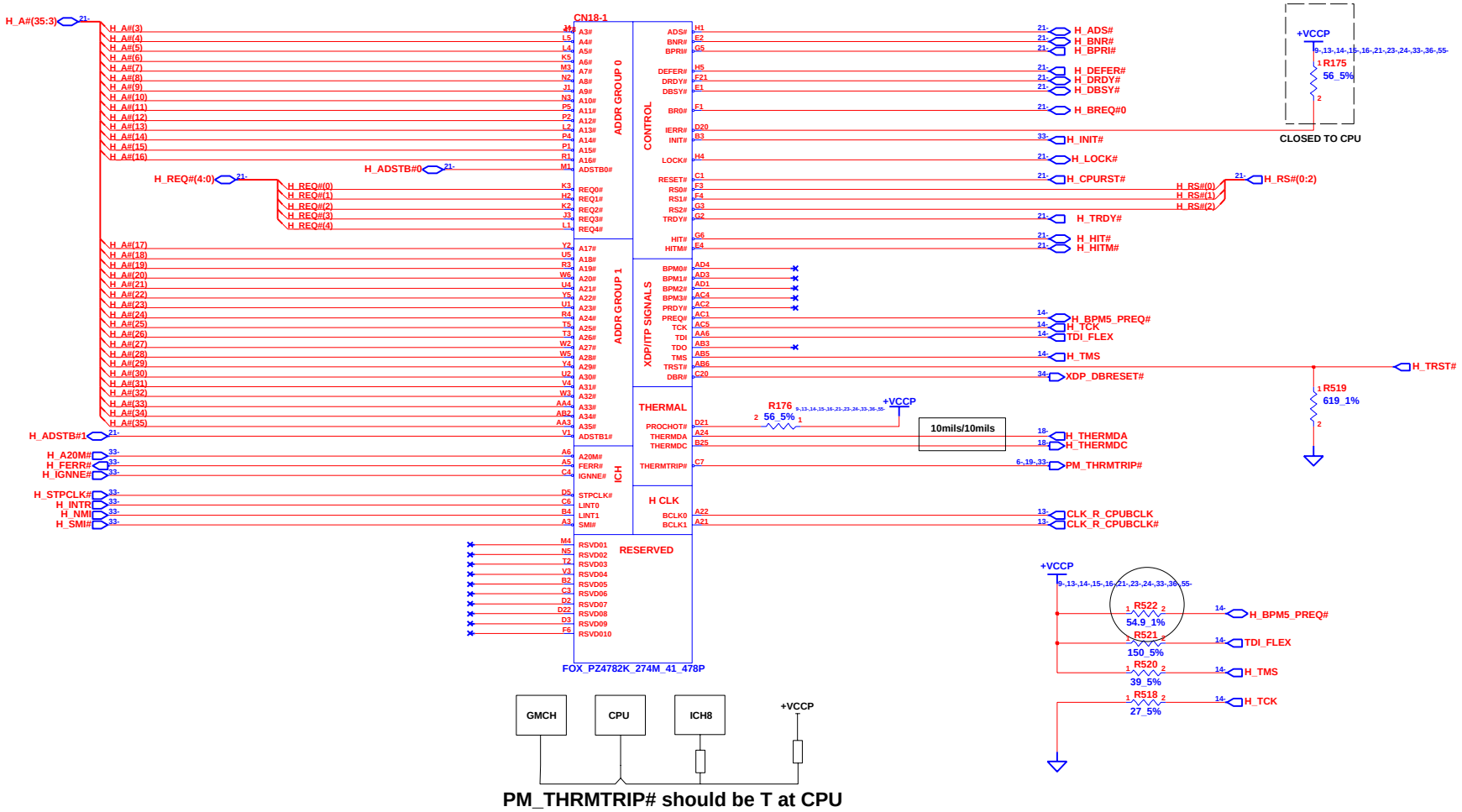

PM_THRMTRIP# should be T at CPU

INVENTEC			
TITLE CHEELA 2.0 Merom-1			
SIZE A3	CODE CS	DOC. NUMBER 1310A2128301	REV A01
CHANGE by RDEE3A	30-Apr-2007	SHEET 14 OF 59	

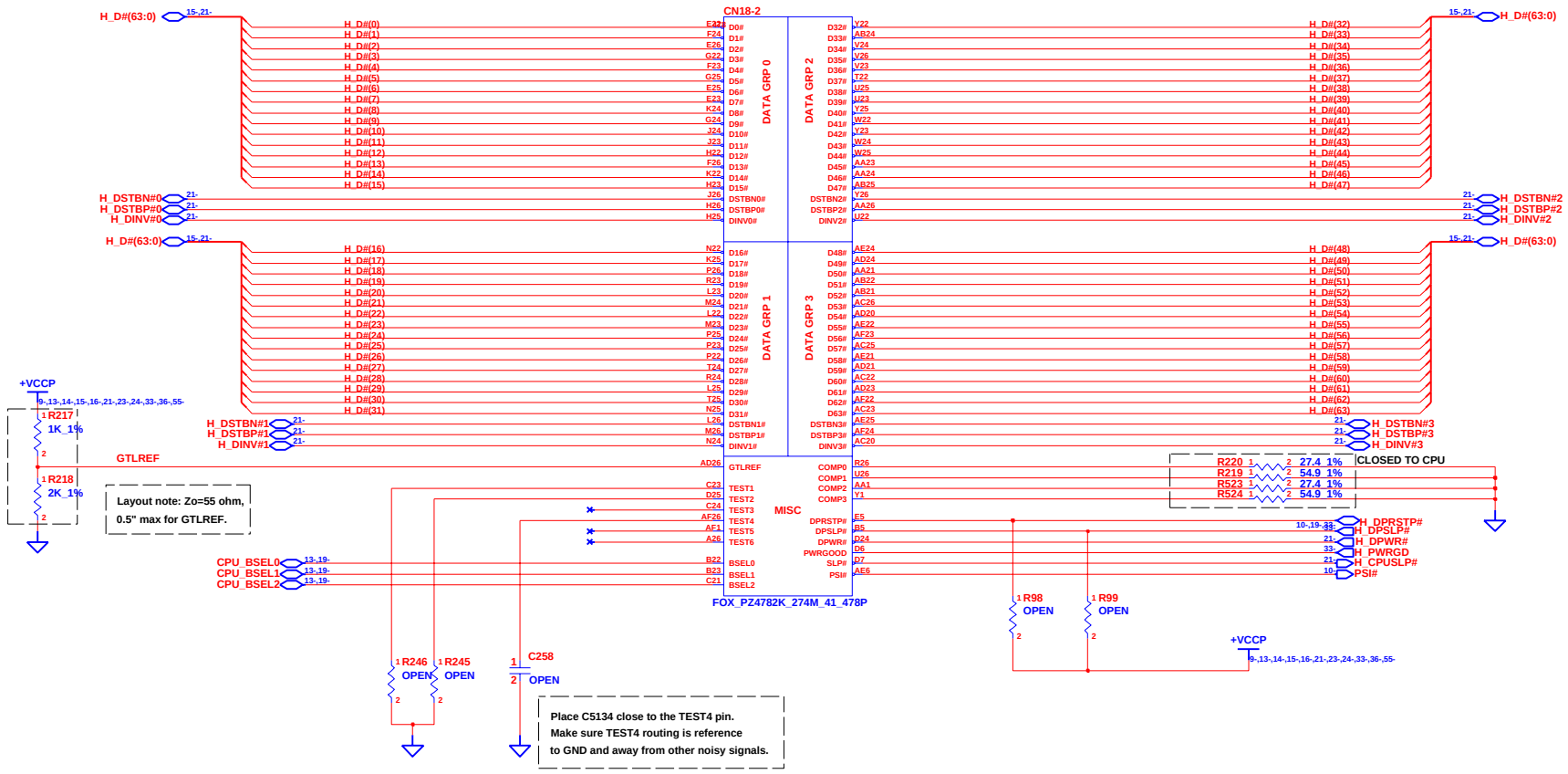

INVENTEC

TITLE CHEELA 2.0
Merom-2

SIZE	CODE	DOC. NUMBER	REV
A3	CS	1310A2128301	A01

CHANGE by RDEE3A 30-Apr-2007

SHEET 15 OF 59

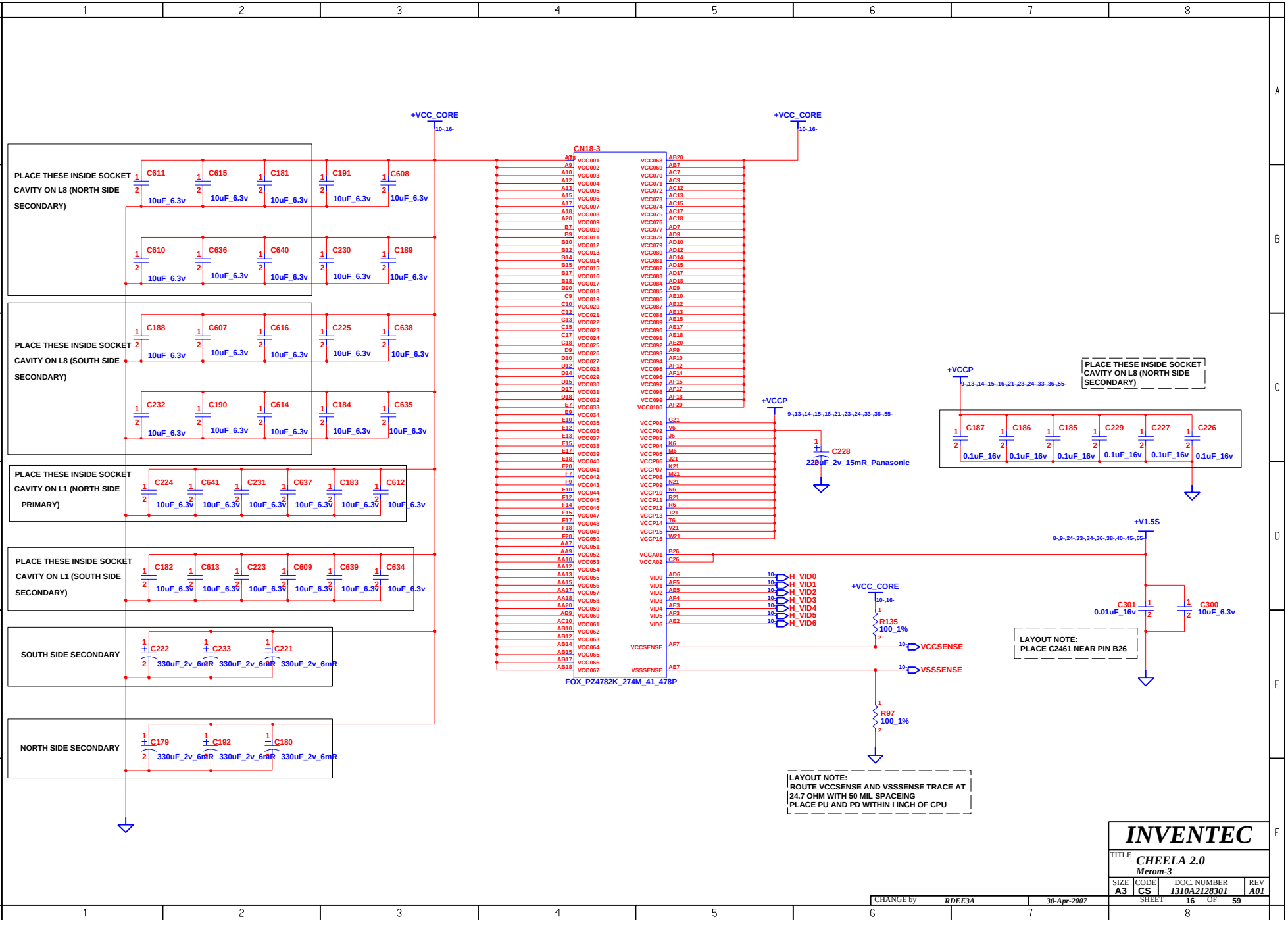
PLACE THESE INSIDE SOCKET CAVITY ON L8 (NORTH SIDE SECONDARY)
C611 C615 C181 C191 C608
C610 C636 C640 C230 C189
10uF_6.3v
PLACE THESE INSIDE SOCKET CAVITY ON L8 (SOUTH SIDE SECONDARY)
C188 C607 C616 C225 C638
C232 C190 C614 C184 C635
PLACE THESE INSIDE SOCKET CAVITY ON L1 (NORTH SIDE PRIMARY)
C224 C641 C231 C637 C183 C612
PLACE THESE INSIDE SOCKET CAVITY ON L1 (SOUTH SIDE SECONDARY)
C182 C613 C223 C609 C639 C634
SOUTH SIDE SECONDARY
C222 C233 C221
330uF_2v_6mR
NORTH SIDE SECONDARY
C179 C192 C180
+VCC_CORE
10-,16-
CN18-3
FOX_PZ4782K_274M_41_478P
+VCCP
9-,13-,14-,15-,16-,21-,23-,24-,33-,36-,55-
C228
220uF_2v_15mR_Panasonic
PLACE THESE INSIDE SOCKET CAVITY ON L8 (NORTH SIDE SECONDARY)
C187 C186 C185 C229 C227 C226
0.1uF_16v
+V1.5S
8-,9-,24-,33-,34-,36-,38-,40-,45-,55-
C301 0.01uF_16v
C300 10uF_6.3v
LAYOUT NOTE:
PLACE C2461 NEAR PIN B26
H_VID0
H_VID1
H_VID2
H_VID3
H_VID4
H_VID5
H_VID6
R135 100_1%
VCCSENSE
VSSSENSE
R97 100_1%
LAYOUT NOTE:
ROUTE VCCSENSE AND VSSSENSE TRACE AT 24.7 OHM WITH 50 MIL SPACEING
PLACE PU AND PD WITHIN I INCH OF CPU
INVENTEC
TITLE CHEELA 2.0
Merom-3
SIZE A3
CODE CS
DOC. NUMBER 1310A2128301
REV A01
SHEET 16 OF 59
CHANGE by RDEE3A
30-Apr-2007

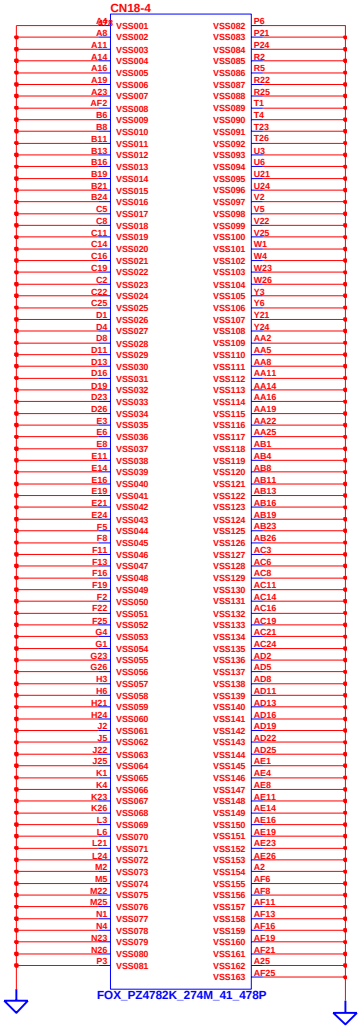

CHANGE by	RDEE3A	30-Apr-2007	

INVENTEC

TITLE *CHEELA 2.0*
Merom-4

SIZE	CODE	DOC. NUMBER	REV
A3	CS	1310A2128301	A01

SHEET 17 OF 59

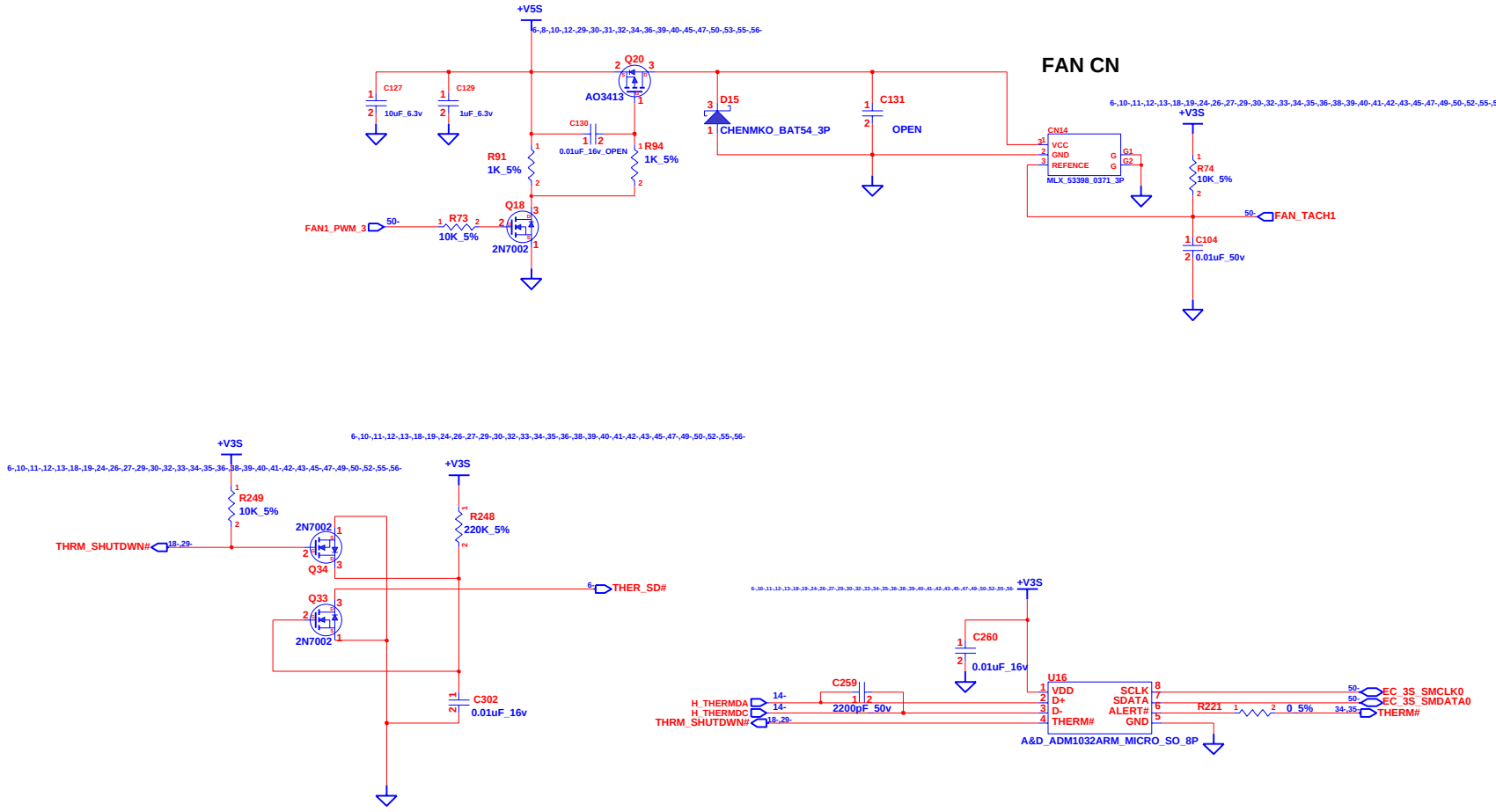

Thermal Sensor For CPU

CHANGE by	RDEE3A	30-Apr-2007	

INVENTEC

TITLE **CHEELA 2.0**
THERMAL&FAN CONTROLLER

SIZE	CODE	DOC. NUMBER	REV
A3	CS	1310A2128301	A01

SHEET 18 OF 59

MCH_CFG(5)	LOW=DMIx2 HIGH=DMIx4

MCH_CFG(7) (CPU Strap)	LOW=RSVD HIGH=Mobile CPU

MCH_CFG(9) PCIE Graphics Lane	LOW=Reverse Lane HIGH=Normal operation

MCH_CFG(11) PSB 4X CLK ENABLE	LOW=CALISTOGA HIGH=RESERVED

MCH_CFG(13:12) XOR/ALLZ	00=PARTIAL CLOCK GATING DISABLE 01=XOR MODE ENABLE 10=ALL-Z MODE ENABLE 11=NORMAL OPERATION

MCH_CFG(16) (FSB Dynamic ODT)	LOW=Dynamic ODT Disable HIGH=Dynamic ODT Enable

NOTE: CFG[2:0] STRP : 001b : 533 MT/S
011b : 667 MT/S

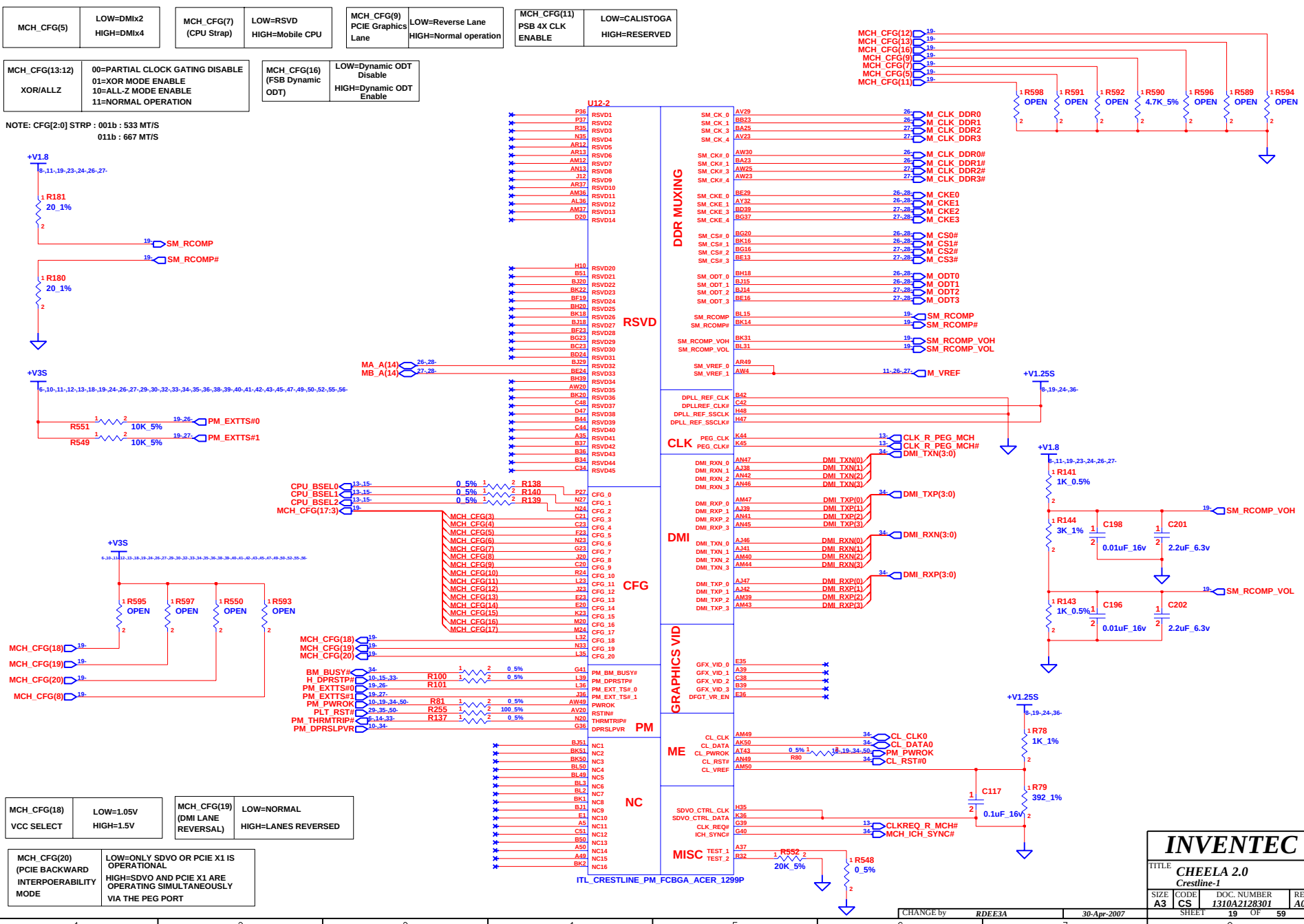

MCH_CFG(18) VCC SELECT	LOW=1.05V HIGH=1.5V

MCH_CFG(19) (DMI LANE REVERSAL)	LOW=NORMAL HIGH=LANES REVERSED

MCH_CFG(20) (PCIE BACKWARD INTERPOERABILITY MODE	LOW=ONLY SDVO OR PCIE X1 IS OPERATIONAL HIGH=SDVO AND PCIE X1 ARE OPERATING SIMULTANEOUSLY VIA THE PEG PORT

INVENTEC

TITLE **CHEELA 2.0**
Crestline-1

SIZE	CODE	DOC. NUMBER	REV
A3	CS	1310A2128301	A01

SHEET 19 OF 59

CHANGE by RDEE3A 30-Apr-2007

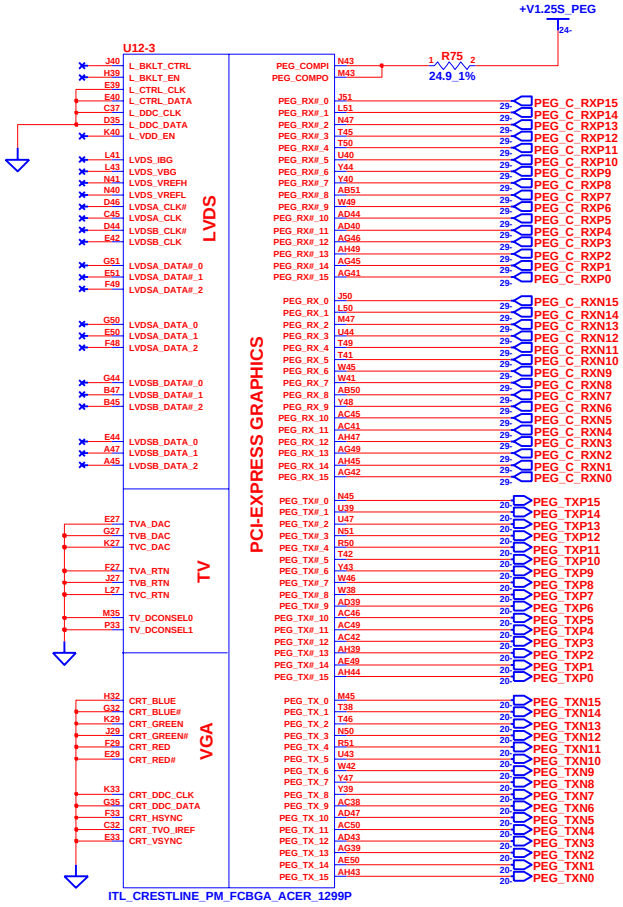

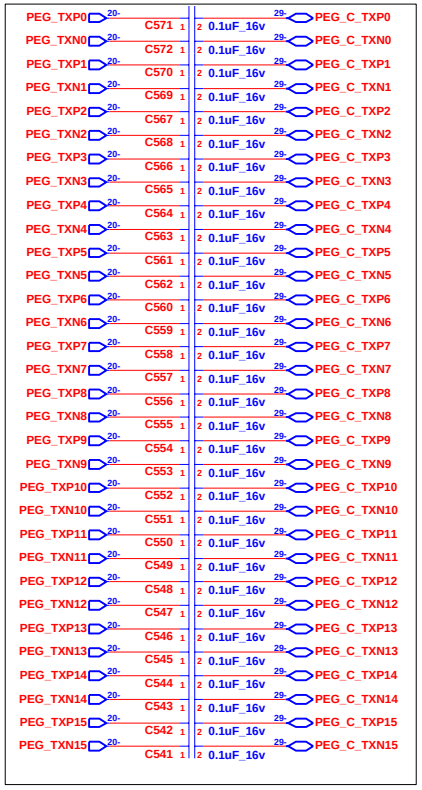

Place to near NB

CHANGE by	RDEE3A	30-Apr-2007

INVENTEC

TITLE *CHEELA 2.0*
Crestline-2

SIZE	CODE	DOC. NUMBER	REV
A3	CS	1310A2128301	A01

SHEET 20 OF 59

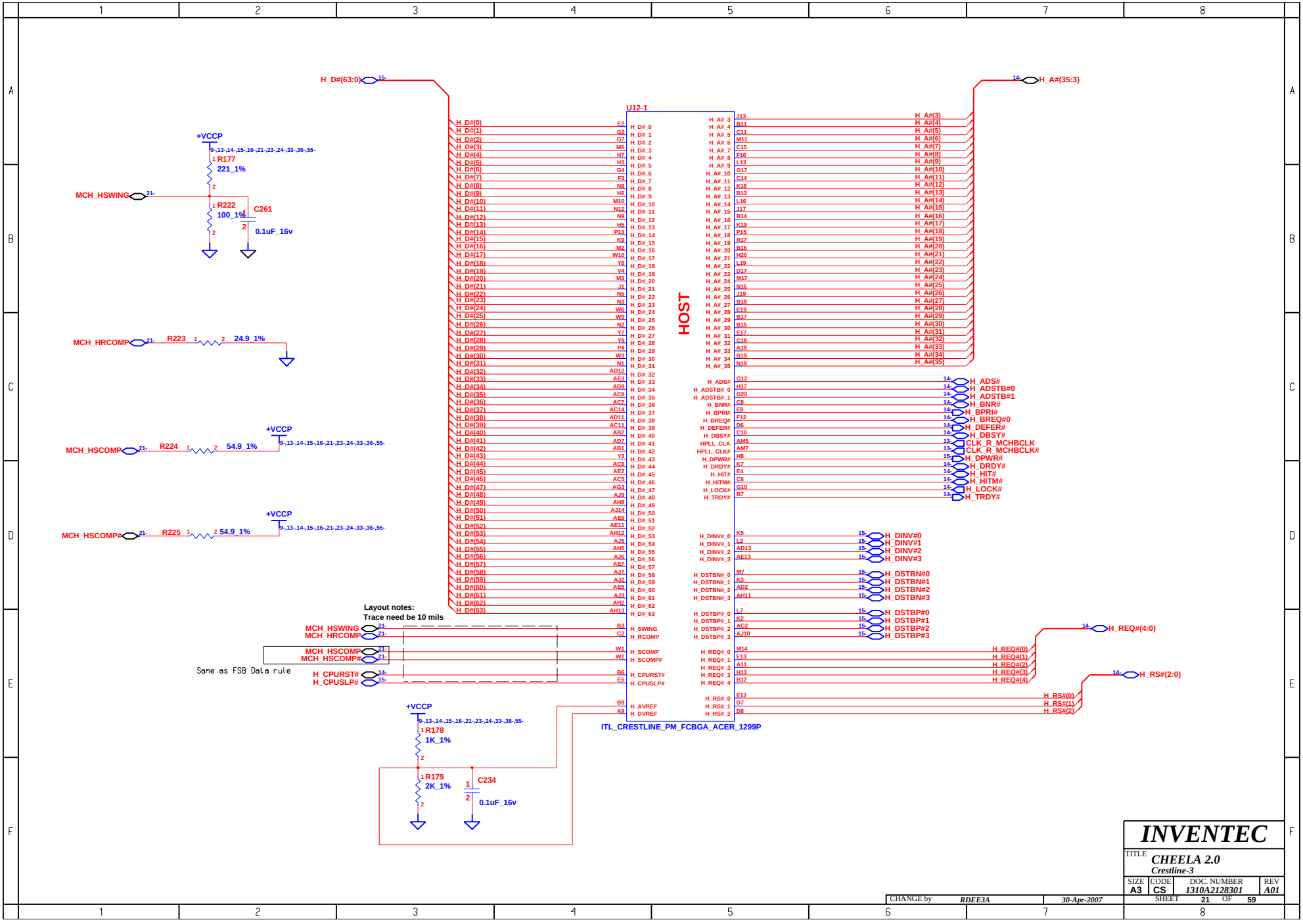
U12-1
HOST
ITL_CRESTLINE_PM_FCBGA_ACER_1299P
H_D#(63:0)
H_A#(35:3)
H_REQ#(4:0)
H_RS#(2:0)
+VCCP
R177 221_1%
R222 100_1%
C261 0.1uF_16v
MCH_HSWING
MCH_HRCOMP
R223 24.9_1%
MCH_HSCOMP
R224 54.9_1%
MCH_HSCOMP#
R225 54.9_1%
Layout notes:
Trace need be 10 mils
Same as FSB Data rule
H_CPURST#
H_CPUSLP#
R178 1K_1%
R179 2K_1%
C234 0.1uF_16v
H_ADS#
H_ADSTB#0
H_ADSTB#1
H_BNR#
H_BPRI#
H_BREQ#0
H_DEFER#
H_DBSY#
CLK_R_MCHBCLK
CLK_R_MCHBCLK#
H_DPWR#
H_DRDY#
H_HIT#
H_HITM#
H_LOCK#
H_TRDY#
H_DINV#0
H_DINV#1
H_DINV#2
H_DINV#3
H_DSTBN#0
H_DSTBN#1
H_DSTBN#2
H_DSTBN#3
H_DSTBP#0
H_DSTBP#1
H_DSTBP#2
H_DSTBP#3
H_REQ#(0)
H_REQ#(1)
H_REQ#(2)
H_REQ#(3)
H_REQ#(4)
H_RS#(0)
H_RS#(1)
H_RS#(2)
INVENTEC
TITLE
CHEELA 2.0
Crestline-3
SIZE A3
CODE CS
DOC. NUMBER 1310A2128301
REV A01
SHEET 21 OF 59
CHANGE by RDEE3A
30-Apr-2007

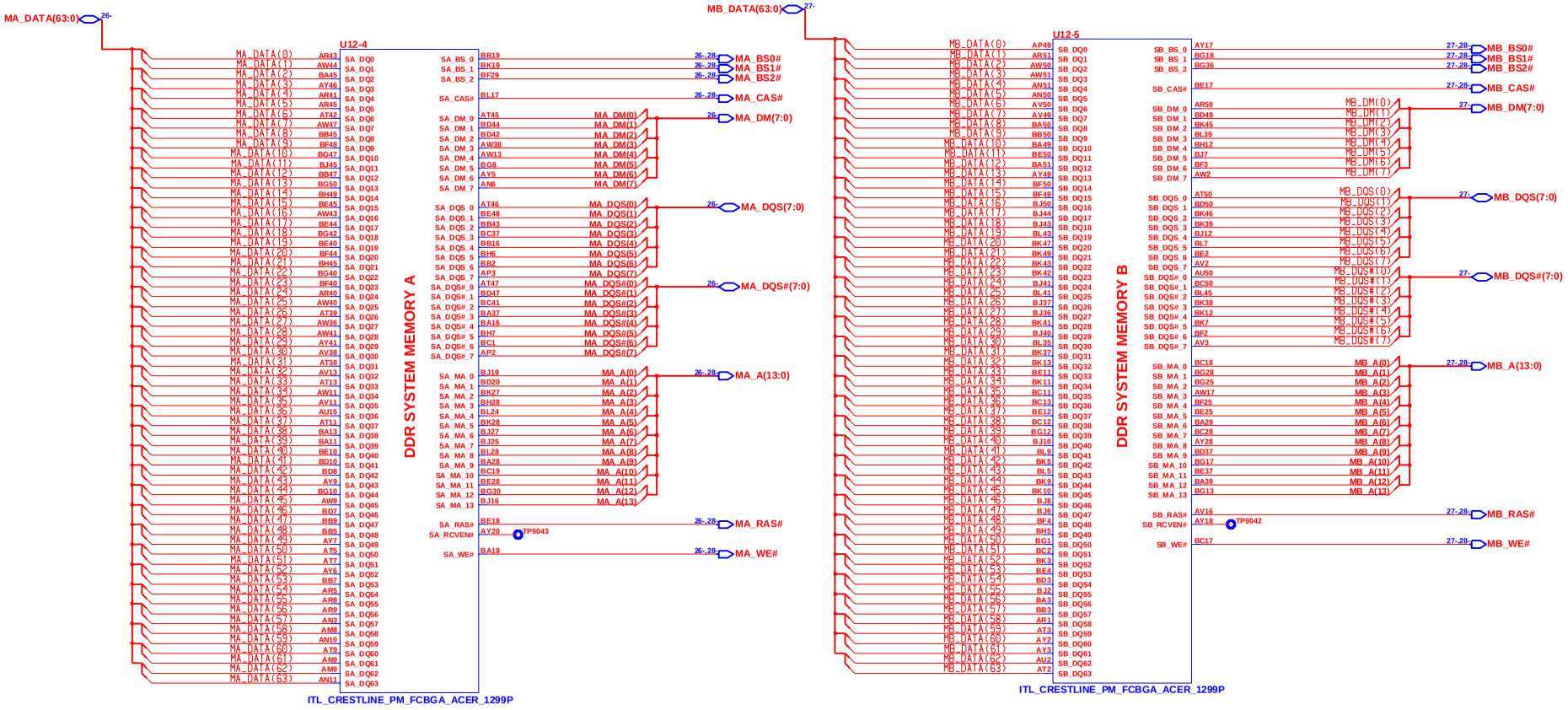

CHANGE by	RDEE3A	30-Apr-2007	

INVENTEC

TITLE *CHEELA 2.0*
Crestline-4

SIZE	CODE	DOC. NUMBER	REV
A3	CS	1310A2128301	A01

SHEET 22 OF 59

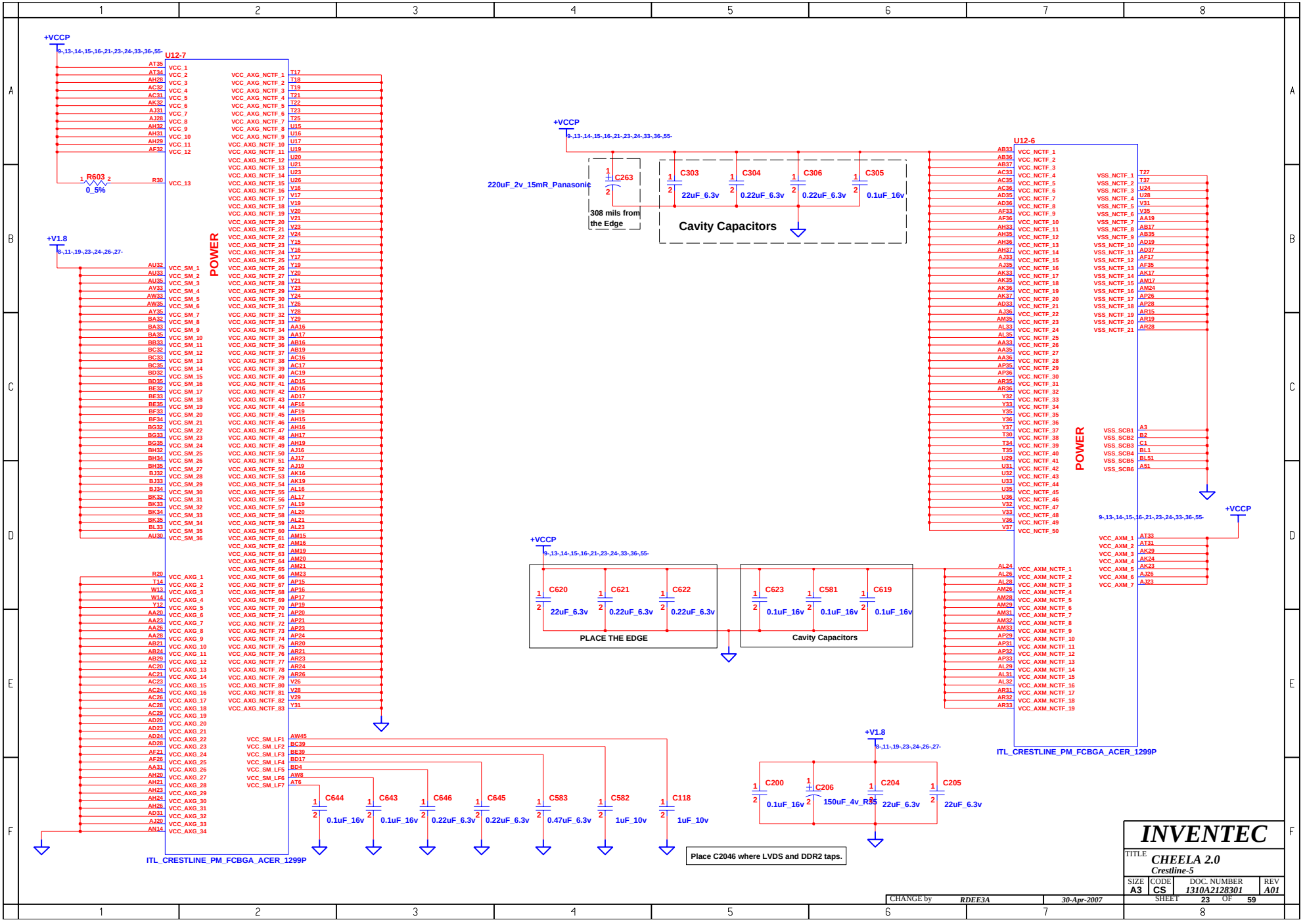
+VCCP
9-,13-,14-,15-,16-,21-,23-,24-,33-,36-,55-
U12-7
R603
0_5%
+V1.8
8-,11-,19-,23-,24-,26-,27-
POWER
ITL_CRESTLINE_PM_FCBGA_ACER_1299P
C263
220uF_2v_15mR_Panasonic
308 mils from the Edge
C303
22uF_6.3v
C304
0.22uF_6.3v
C306
0.22uF_6.3v
C305
0.1uF_16v
Cavity Capacitors
U12-6
VSS_NCTF_1
VSS_NCTF_2
VSS_NCTF_3
VSS_NCTF_4
VSS_NCTF_5
VSS_NCTF_6
VSS_NCTF_7
VSS_NCTF_8
VSS_NCTF_9
VSS_NCTF_10
VSS_NCTF_11
VSS_NCTF_12
VSS_NCTF_13
VSS_NCTF_14
VSS_NCTF_15
VSS_NCTF_16
VSS_NCTF_17
VSS_NCTF_18
VSS_NCTF_19
VSS_NCTF_20
VSS_NCTF_21
VSS_SCB1
VSS_SCB2
VSS_SCB3
VSS_SCB4
VSS_SCB5
VSS_SCB6
VCC_AXM_1
VCC_AXM_2
VCC_AXM_3
VCC_AXM_4
VCC_AXM_5
VCC_AXM_6
VCC_AXM_7
C620
22uF_6.3v
C621
0.22uF_6.3v
C622
0.22uF_6.3v
PLACE THE EDGE
C623
0.1uF_16v
C581
0.1uF_16v
C619
0.1uF_16v
Cavity Capacitors
C644
0.1uF_16v
C643
0.1uF_16v
C646
0.22uF_6.3v
C645
0.22uF_6.3v
C583
0.47uF_6.3v
C582
1uF_10v
C118
1uF_10v
C200
0.1uF_16v
C206
150uF_4v_R35
C204
22uF_6.3v
C205
22uF_6.3v
Place C2046 where LVDS and DDR2 taps.
INVENTEC
TITLE
CHEELA 2.0
Crestline-5
SIZE A3
CODE CS
DOC. NUMBER 1310A2128301
REV A01
SHEET 23 OF 59
CHANGE by RDEE3A
30-Apr-2007

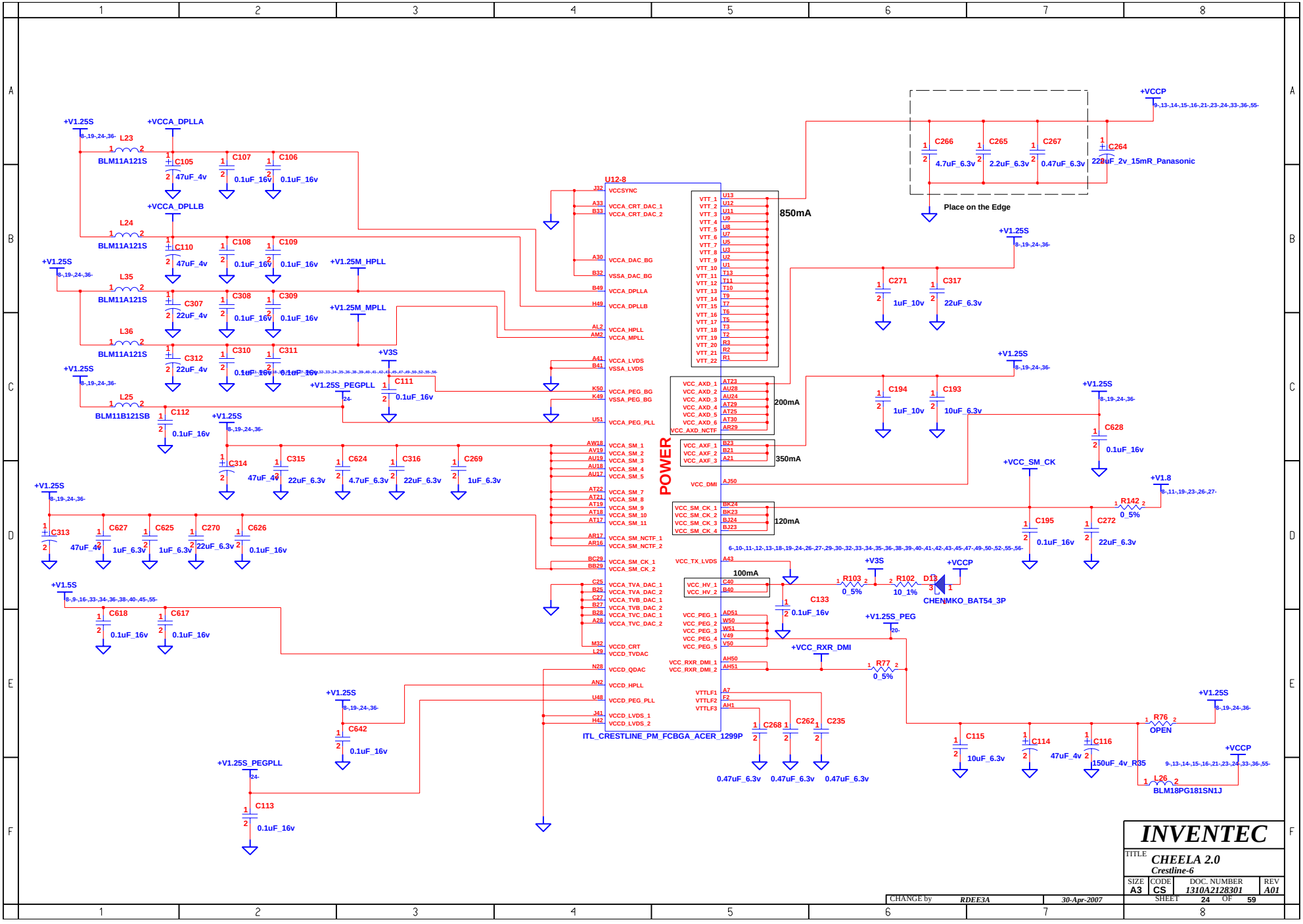
U12-8
POWER
ITL_CRESTLINE_PM_FCBGA_ACER_1299P
850mA
200mA
350mA
120mA
100mA
+V1.25S
+VCCA_DPLLA
+VCCA_DPLLB
+V1.25M_HPLL
+V1.25M_MPLL
+V3S
+V1.25S_PEGPLL
+V1.5S
+VCCP
Place on the Edge
+V1.25S_PEG
+VCC_RXR_DMI
+VCC_SM_CK
+V1.8
CHENMKO_BAT54_3P
OPEN
BLM11A121S
BLM11B121SB
BLM18PG181SN1J
C266 4.7uF_6.3v
C265 2.2uF_6.3v
C267 0.47uF_6.3v
C264 220uF_2v_15mR_Panasonic
C271 1uF_10v
C317 22uF_6.3v
C194 1uF_10v
C193 10uF_6.3v
C628 0.1uF_16v
C195 0.1uF_16v
C272 22uF_6.3v
R142 0_5%
R103 0_5%
R102 10_1%
D13
C133 0.1uF_16v
R77 0_5%
R76 OPEN
C115 10uF_6.3v
C114 47uF_4v
C116 150uF_4v_R35
L26 BLM18PG181SN1J
C268 0.47uF_6.3v
C262 0.47uF_6.3v
C235 0.47uF_6.3v
C642 0.1uF_16v
C113 0.1uF_16v
C618 0.1uF_16v
C617 0.1uF_16v
C313 47uF_4v
C627 1uF_6.3v
C625 1uF_6.3v
C270 22uF_6.3v
C626 0.1uF_16v
C314 47uF_4v
C315 22uF_6.3v
C624 4.7uF_6.3v
C316 22uF_6.3v
C269 1uF_6.3v
C112 0.1uF_16v
C111 0.1uF_16v
C105 47uF_4v
C107 0.1uF_16v
C106 0.1uF_16v
C110 47uF_4v
C108 0.1uF_16v
C109 0.1uF_16v
C307 22uF_4v
C308 0.1uF_16v
C309 0.1uF_16v
C312 22uF_4v
C310 0.1uF_16v
C311 0.1uF_16v
L23 BLM11A121S
L24 BLM11A121S
L35 BLM11A121S
L36 BLM11A121S
L25 BLM11B121SB
INVENTEC
TITLE CHEELA 2.0
Crestline-6
SIZE A3
CODE CS
DOC. NUMBER 1310A2128301
REV A01
SHEET 24 OF 59
CHANGE by RDEE3A
30-Apr-2007

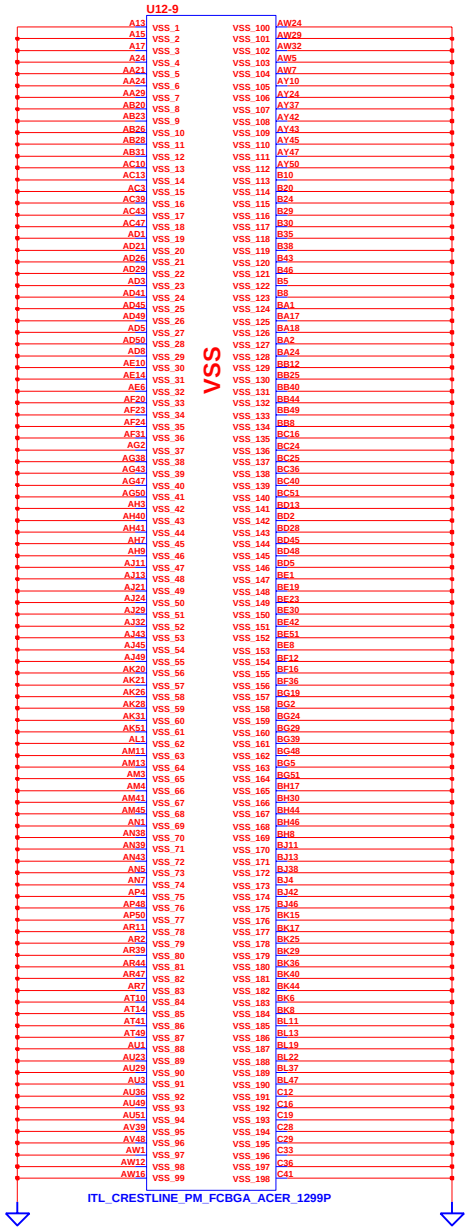

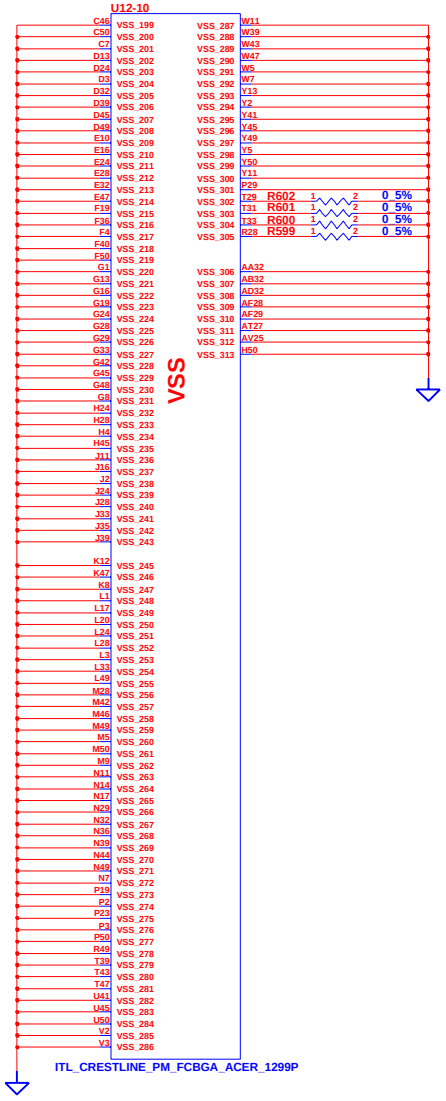

INVENTEC			
TITLE CHEELA 2.0 Crestline-7			
SIZE A3	CODE CS	DOC. NUMBER 1310A2128301	REV A01
CHANGE by RDEE3A	30-Apr-2007	SHEET 25 OF 59	

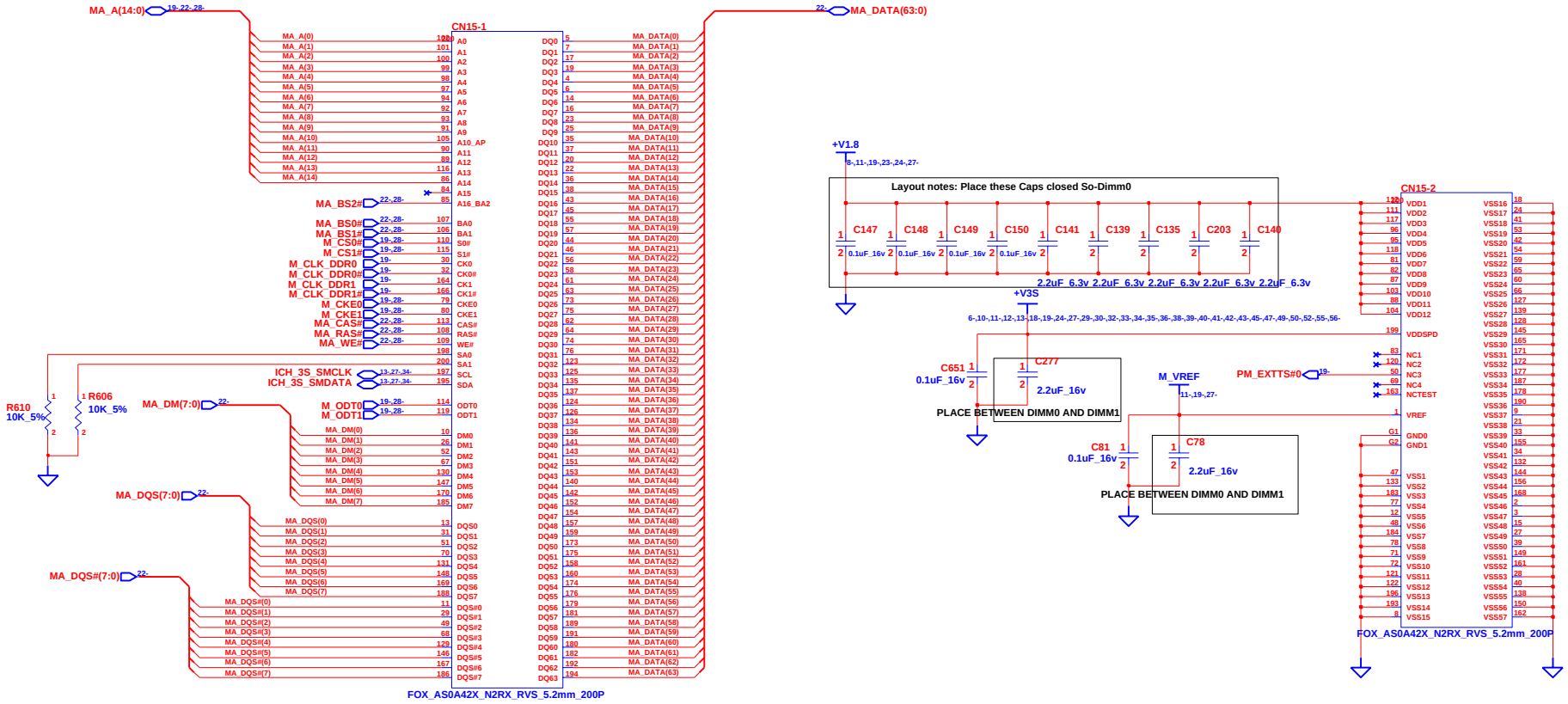

DDR2 SODIMM0

INVENTEC			
TITLE CHEELA 2.0 DDR2-DIMM-0			
SIZE A3	CODE CS	DOC. NUMBER 1310A2128301	REV A01
CHANGE by RDEE3A	30-Apr-2007	SHEET 26 OF 59	

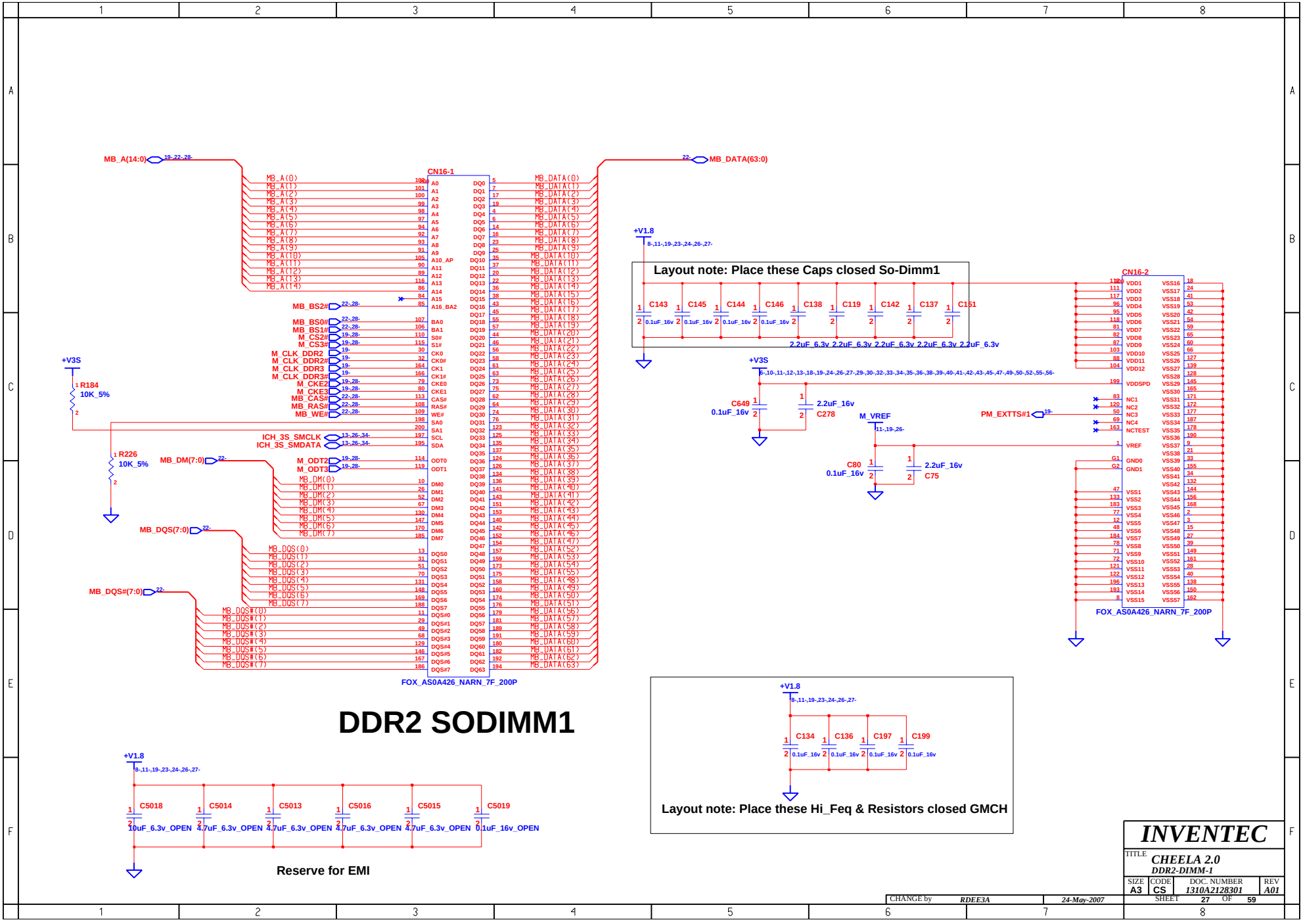
MB_A(14:0)
MB_DATA(63:0)
CN16-1
FOX_AS0A426_NARN_7F_200P
+V3S
R184
10K_5%
R226
10K_5%
MB_DM(7:0)
MB_DQS(7:0)
MB_DQS#(7:0)
MB_BS2#
MB_BS0#
MB_BS1#
M_CS2#
M_CS3#
M_CLK_DDR2
M_CLK_DDR2#
M_CLK_DDR3
M_CLK_DDR3#
M_CKE2
M_CKE3
MB_CAS#
MB_RAS#
MB_WE#
ICH_3S_SMCLK
ICH_3S_SMDATA
M_ODT2
M_ODT3
+V1.8
Layout note: Place these Caps closed So-Dimm1
C143
C145
C144
C146
C138
C119
C142
C137
C151
0.1uF_16v
2.2uF_6.3v
CN16-2
FOX_AS0A426_NARN_7F_200P
C649
0.1uF_16v
2.2uF_16v
C278
M_VREF
PM_EXTTS#1
C80
0.1uF_16v
2.2uF_16v
C75
DDR2 SODIMM1
C5018
C5014
C5013
C5016
C5015
C5019
10uF_6.3v_OPEN
4.7uF_6.3v_OPEN
0.1uF_16v_OPEN
Reserve for EMI
C134
C136
C197
C199
Layout note: Place these Hi_Feq & Resistors closed GMCH
INVENTEC
TITLE
CHEELA 2.0
DDR2-DIMM-1
SIZE A3
CODE CS
DOC. NUMBER 1310A2128301
REV A01
SHEET 27 OF 59
CHANGE by RDEE3A
24-May-2007

CHANGE by	RDEE3A	30-Apr-2007	

INVENTEC

TITLE *CHEELA 2.0*
DDR2-DAMPING

SIZE	CODE	DOC. NUMBER	REV
A3	CS	1310A2128301	A01

SHEET 28 OF 59

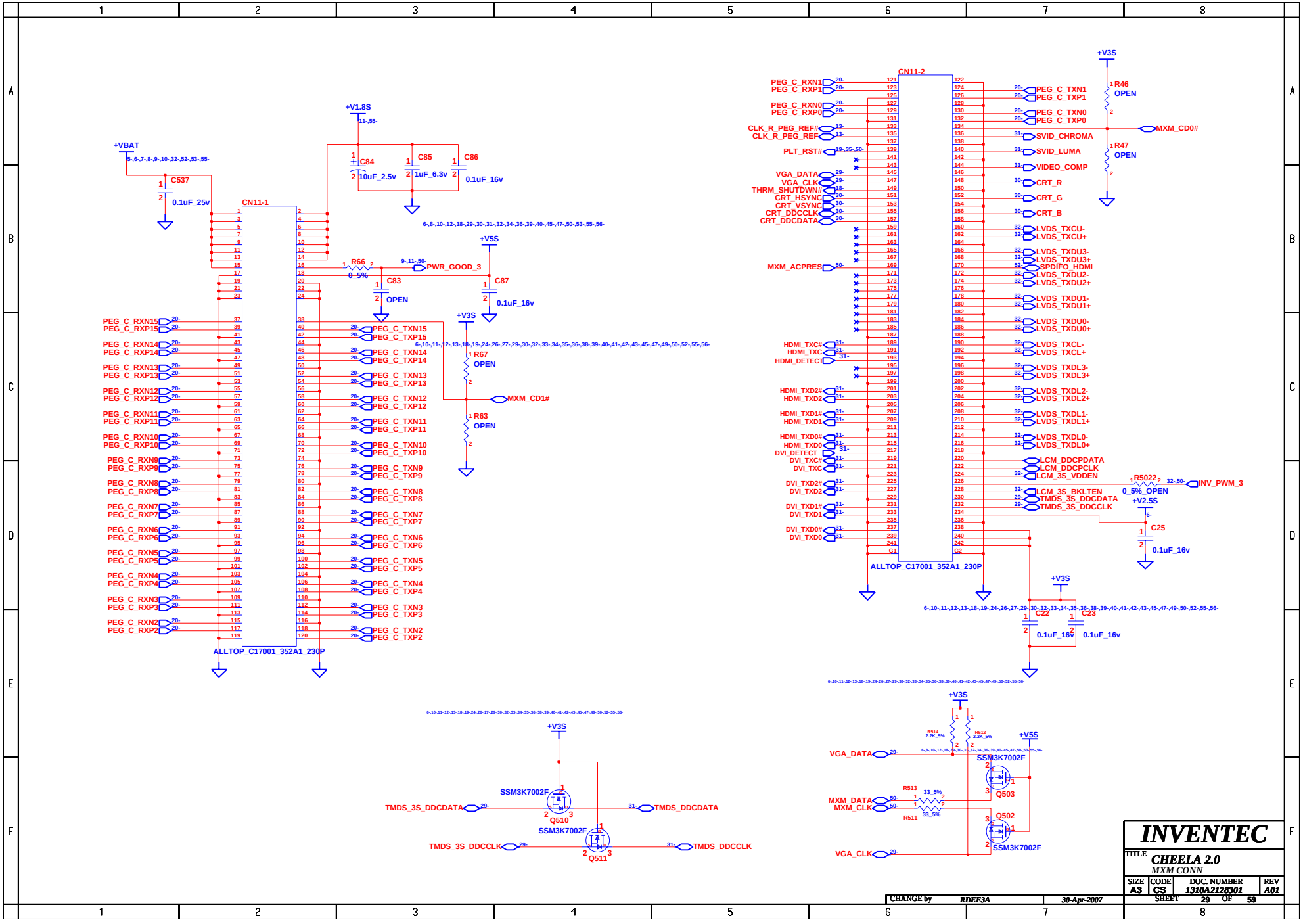

CHANGE by	RDEE3A	30-Apr-2007	

INVENTEC

TITLE **CHEELA 2.0**
MXM CONN

SIZE	CODE	DOC. NUMBER	REV
A3	CS	1310A2128301	A01

SHEET 29 OF 59

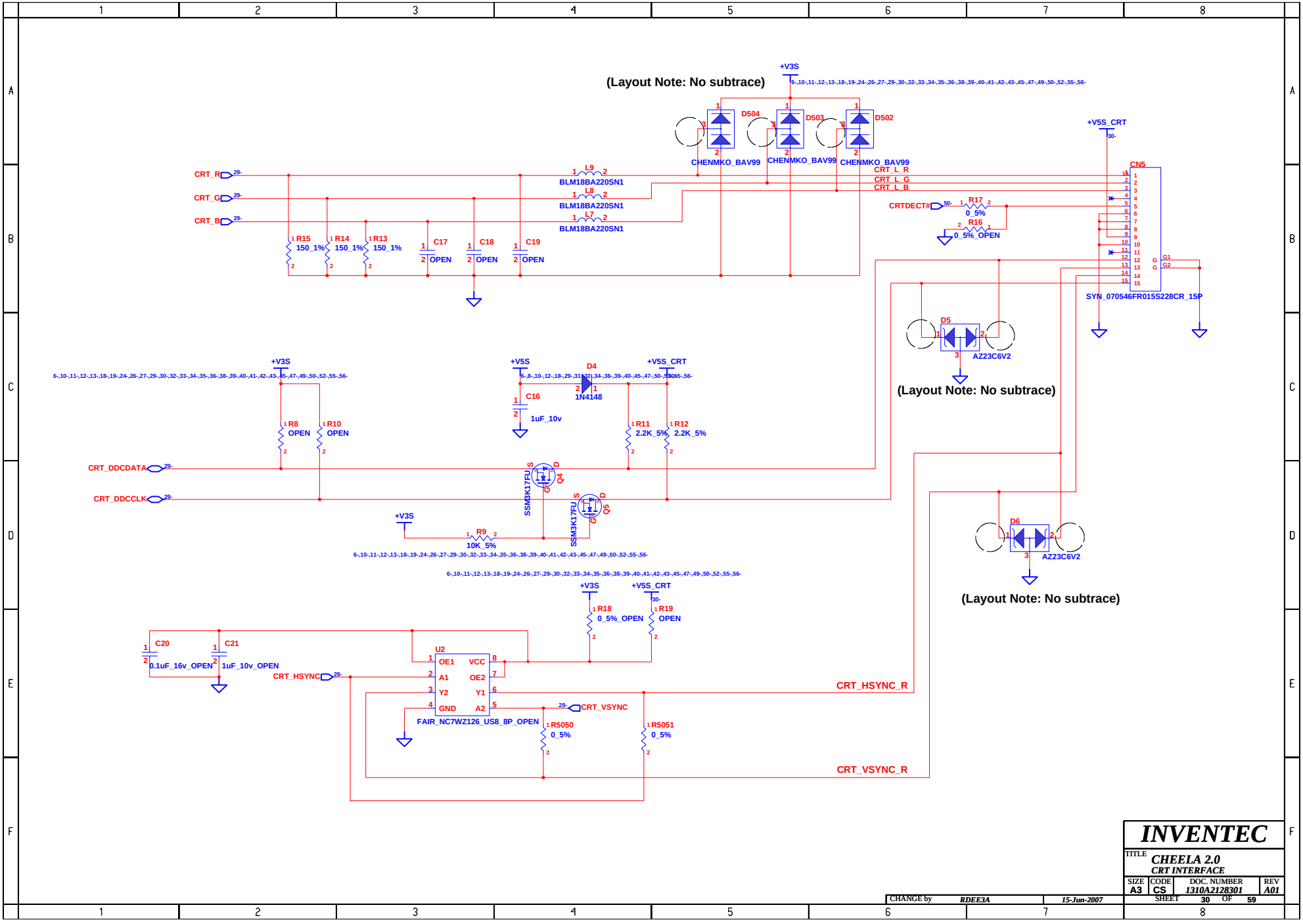

CHANGE by	RDEE3A	15-Jun-2007	

INVENTEC

TITLE: *CHEELA 2.0*
CRT INTERFACE

SIZE	CODE	DOC. NUMBER	REV
A3	CS	1310A2128301	A01

SHEET 30 OF 59

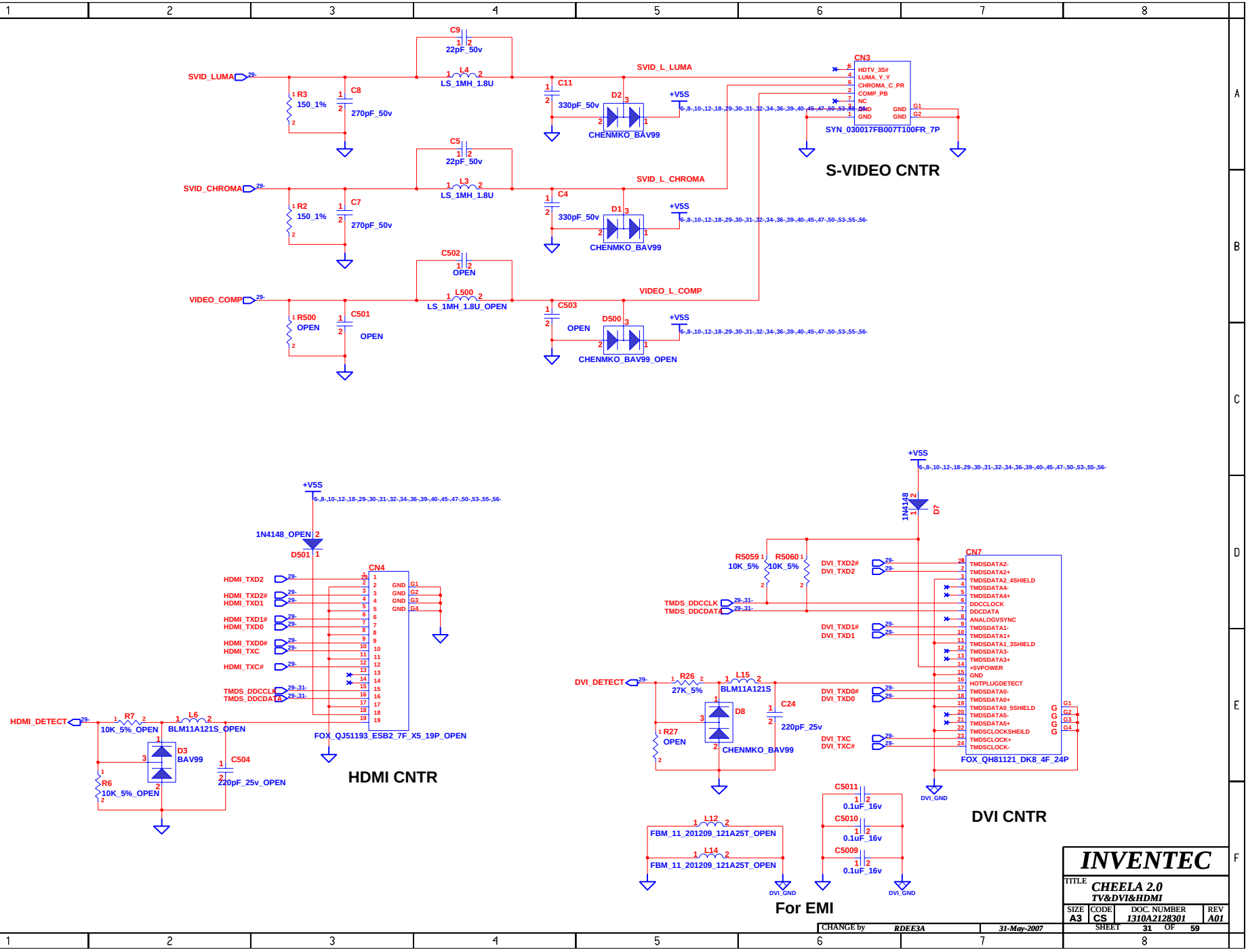
SVID_LUMA
SVID_CHROMA
VIDEO_COMP
R3 150_1%
R2 150_1%
R500 OPEN
C8 270pF_50v
C7 270pF_50v
C501 OPEN
C9 22pF_50v
C5 22pF_50v
C502 OPEN
L4 LS_1MH_1.8U
L3 LS_1MH_1.8U
L500 LS_1MH_1.8U_OPEN
C11 330pF_50v
C4 330pF_50v
C503 OPEN
D2
D1
D500
CHENMKO_BAV99
CHENMKO_BAV99_OPEN
+V5S
SVID_L_LUMA
SVID_L_CHROMA
VIDEO_L_COMP
CN3
SYN_030017FB007T100FR_7P
S-VIDEO CNTR
1N4148_OPEN
D501
CN4
FOX_QJ51193_ESB2_7F_X5_19P_OPEN
HDMI_DETECT
R7 10K_5%_OPEN
L6 BLM11A121S_OPEN
D3 BAV99
R6 10K_5%_OPEN
C504 220pF_25v_OPEN
HDMI CNTR
1N4148
D7
R5059 10K_5%
R5060 10K_5%
DVI_DETECT
R26 27K_5%
L15 BLM11A121S
D8
CHENMKO_BAV99
C24 220pF_25v
R27 OPEN
CN7
FOX_QH81121_DK8_4F_24P
DVI_GND
C5011 0.1uF_16v
C5010 0.1uF_16v
C5009 0.1uF_16v
L12 FBM_11_201209_121A25T_OPEN
L14 FBM_11_201209_121A25T_OPEN
For EMI
DVI CNTR
INVENTEC
TITLE CHEELA 2.0
TV&DVI&HDMI
SIZE A3
CODE CS
DOC. NUMBER 1310A2128301
REV A01
SHEET 31 OF 59
CHANGE by RDEE3A
31-May-2007

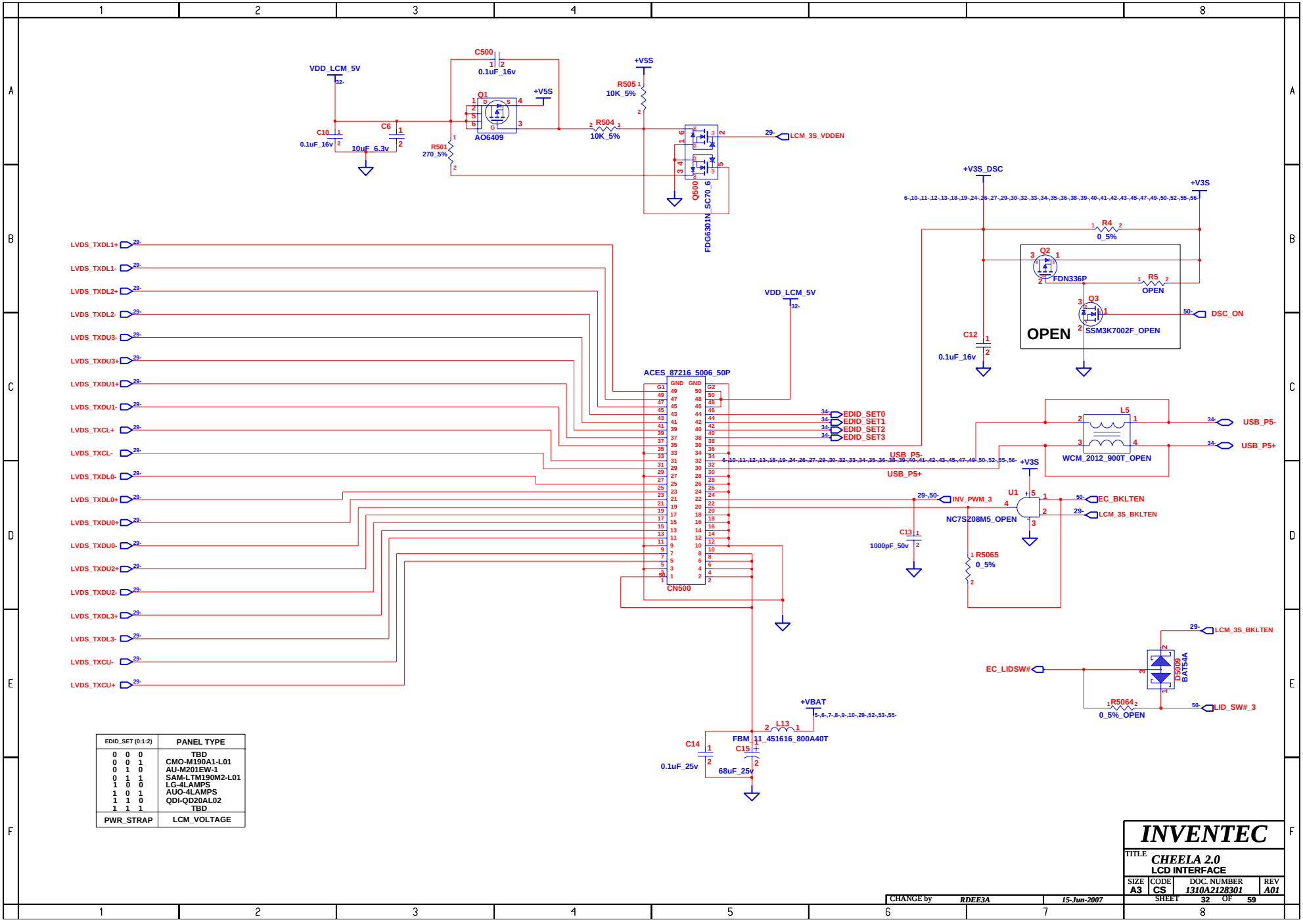

EDID_SET (0:1:2)	PANEL TYPE
0 0 0	TBD
0 0 1	CMO-M190A1-L01
0 1 0	AU-M201EW-1
0 1 1	SAM-LTM190M2-L01
1 0 0	LG-4LAMPS
1 0 1	AUO-4LAMPS
1 1 0	QDI-QD20AL02
1 1 1	TBD
PWR_STRAP	LCM_VOLTAGE

INVENTEC

TITLE CHEELA 2.0
LCD INTERFACE

SIZE	CODE	DOC. NUMBER	REV
A3	CS	1310A2128301	A01

SHEET 32 OF 59

CHANGE by RDEE3A 15-Jun-2007

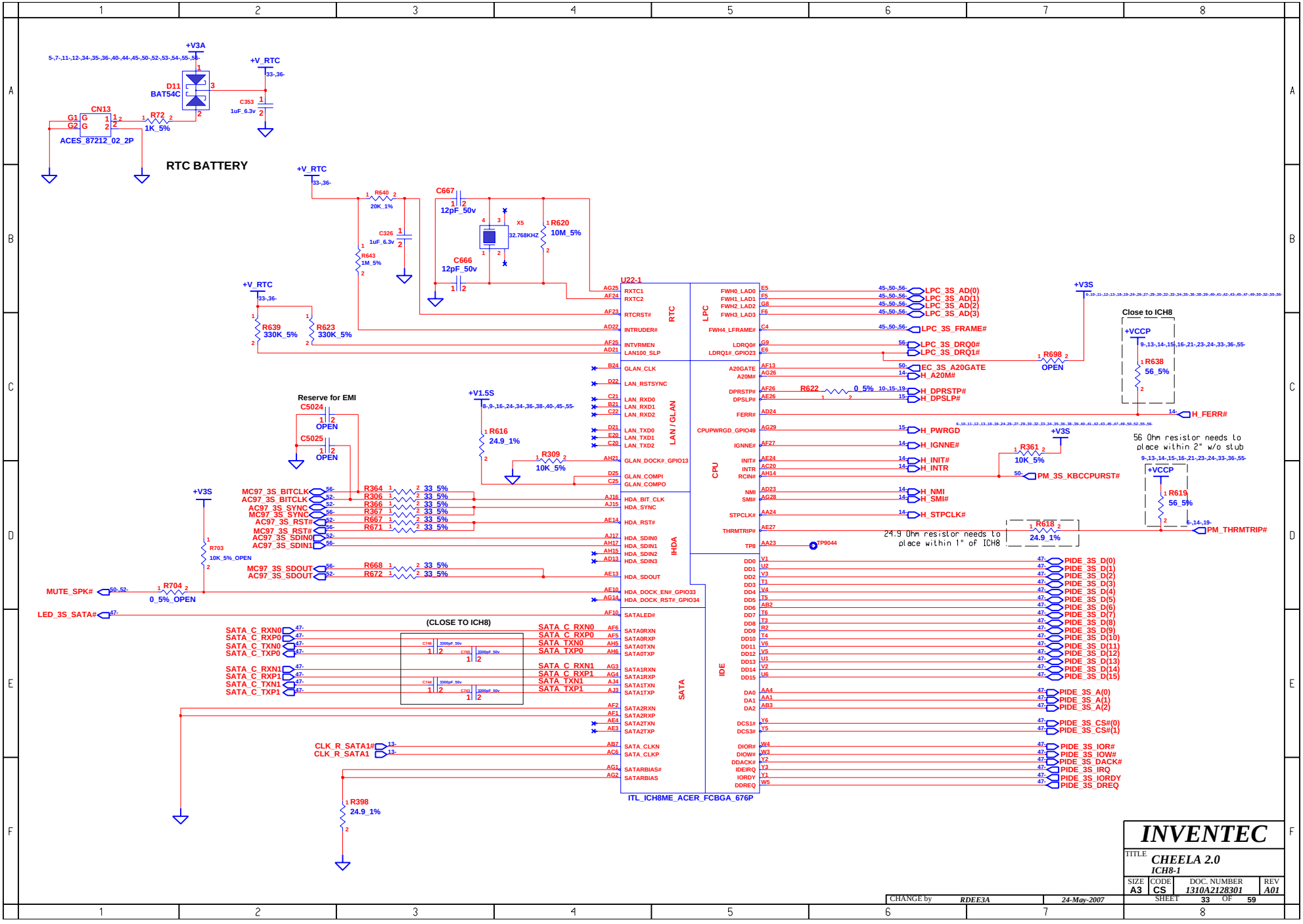
RTC BATTERY
+V3A
+V_RTC
D11
BAT54C
CN13
ACES_87212_02_2P
R72
1K_5%
C353
1uF_6.3v
R640
20K_1%
C326
1uF_6.3v
R643
1M_5%
C667
12pF_50v
C666
12pF_50v
X5
32.768KHZ
R620
10M_5%
R639
330K_5%
R623
330K_5%
U22-1
RTC
LPC
LAN / GLAN
CPU
HDA
SATA
IDE
ITL_ICH8ME_ACER_FCBGA_676P
Reserve for EMI
C5024
OPEN
C5025
OPEN
+V1.5S
R616
24.9_1%
R309
10K_5%
R622
0_5%
R698
OPEN
+V3S
Close to ICH8
+VCCP
R638
56_5%
R619
56_5%
R361
10K_5%
56 Ohm resistor needs to place within 2" w/o stub
R618
24.9_1%
24.9 Ohm resistor needs to place within 1" of ICH8
R703
10K_5%_OPEN
R704
0_5%_OPEN
MUTE_SPK#
LED_3S_SATA#
(CLOSE TO ICH8)
R398
24.9_1%
LPC_3S_AD(0)
LPC_3S_AD(1)
LPC_3S_AD(2)
LPC_3S_AD(3)
LPC_3S_FRAME#
LPC_3S_DRQ0#
LPC_3S_DRQ1#
EC_3S_A20GATE
H_A20M#
H_DPRSTP#
H_DPSLP#
H_FERR#
H_PWRGD
H_IGNNE#
H_INIT#
H_INTR
PM_3S_KBCCPURST#
H_NMI
H_SMI#
H_STPCLK#
PM_THRMTRIP#
TP9044
PIDE_3S_D(0)
PIDE_3S_D(1)
PIDE_3S_D(2)
PIDE_3S_D(3)
PIDE_3S_D(4)
PIDE_3S_D(5)
PIDE_3S_D(6)
PIDE_3S_D(7)
PIDE_3S_D(8)
PIDE_3S_D(9)
PIDE_3S_D(10)
PIDE_3S_D(11)
PIDE_3S_D(12)
PIDE_3S_D(13)
PIDE_3S_D(14)
PIDE_3S_D(15)
PIDE_3S_A(0)
PIDE_3S_A(1)
PIDE_3S_A(2)
PIDE_3S_CS#(0)
PIDE_3S_CS#(1)
PIDE_3S_IOR#
PIDE_3S_IOW#
PIDE_3S_DACK#
PIDE_3S_IRQ
PIDE_3S_IORDY
PIDE_3S_DREQ
MC97_3S_BITCLK
AC97_3S_BITCLK
AC97_3S_SYNC
MC97_3S_SYNC
AC97_3S_RST#
MC97_3S_RST#
AC97_3S_SDIN0
AC97_3S_SDIN1
MC97_3S_SDOUT
AC97_3S_SDOUT
SATA_C_RXN0
SATA_C_RXP0
SATA_C_TXN0
SATA_C_TXP0
SATA_C_RXN1
SATA_C_RXP1
SATA_C_TXN1
SATA_C_TXP1
SATA_TXN0
SATA_TXP0
SATA_TXN1
SATA_TXP1
CLK_R_SATA1#
CLK_R_SATA1
INVENTEC
TITLE
CHEELA 2.0
ICH8-1
SIZE A3
CODE CS
DOC. NUMBER 1310A2128301
REV A01
SHEET 33 OF 59
CHANGE by RDEE3A
24-May-2007

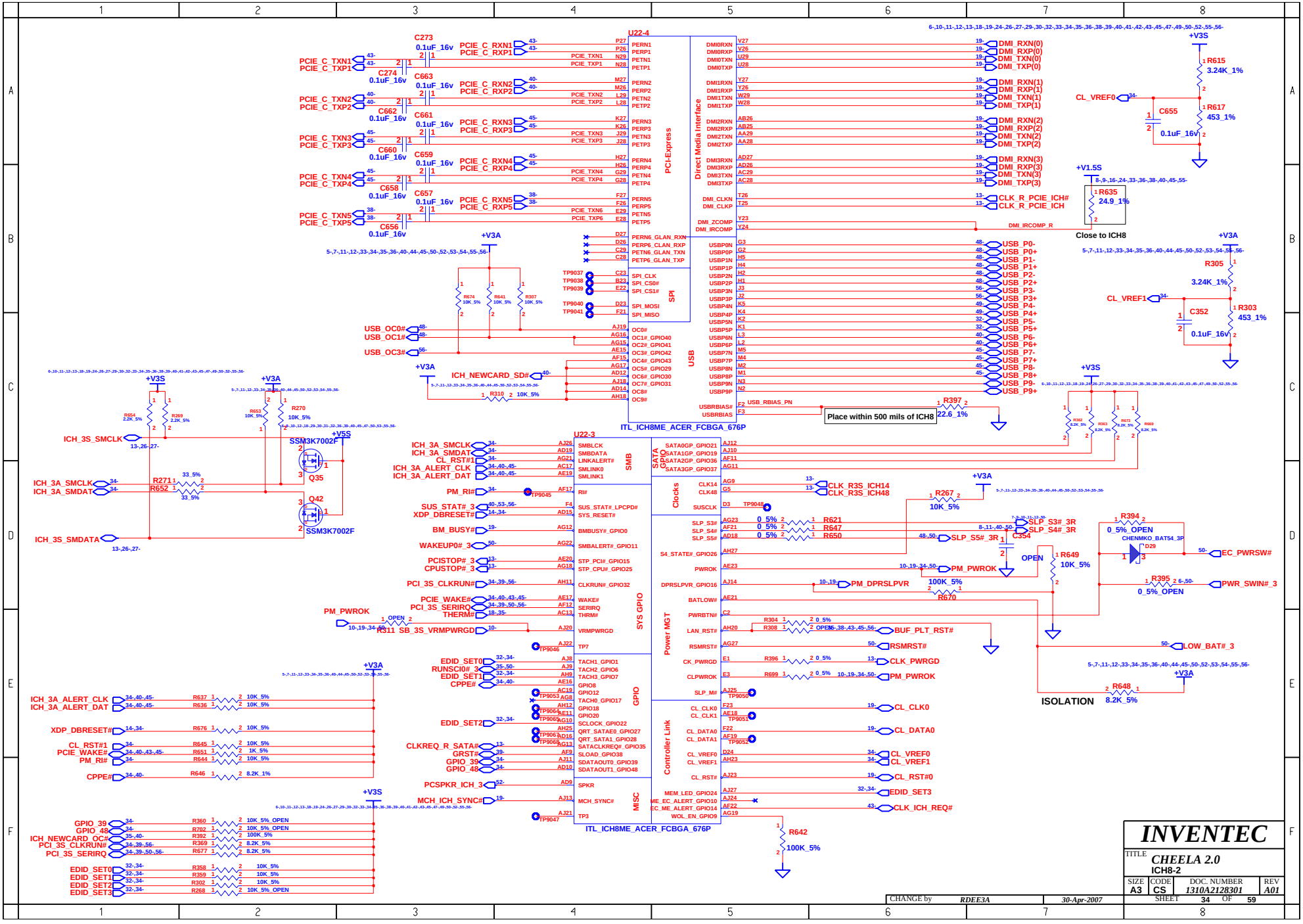
U22-4
PCI-Express
Direct Media Interface
SPI
USB
ITL_ICH8ME_ACER_FCBGA_676P
U22-3
SMB
SATA GPIO
Clocks
Power MGT
SYS GPIO
GPIO
Controller Link
MISC
ITL_ICH8ME_ACER_FCBGA_676P
Close to ICH8
Place within 500 mils of ICH8
ISOLATION
INVENTEC
TITLE
CHEELA 2.0
ICH8-2
SIZE A3
CODE CS
DOC. NUMBER 1310A2128301
REV A01
SHEET 34 OF 59
CHANGE by RDEE3A
30-Apr-2007

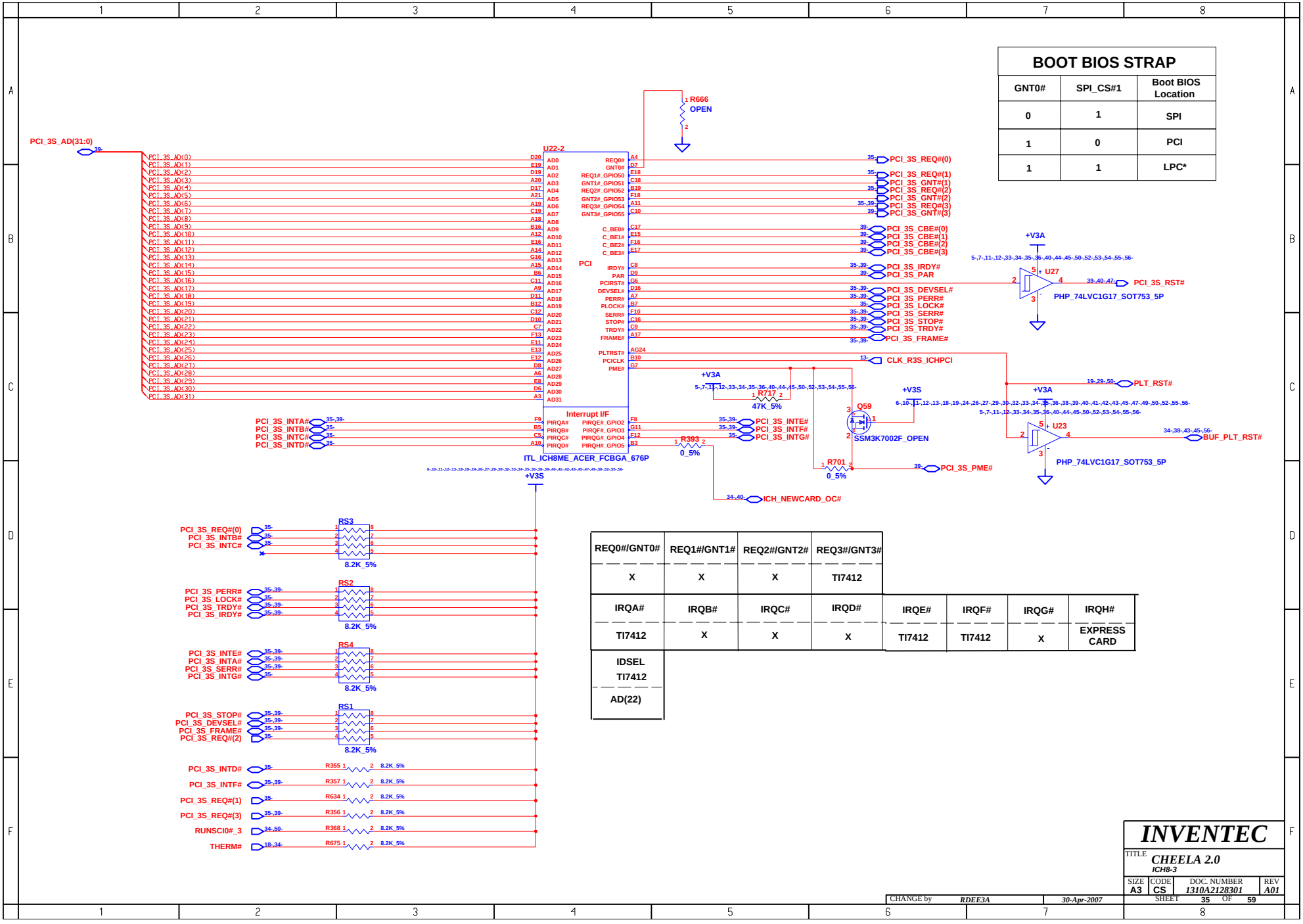

BOOT BIOS STRAP

GNT0#	SPI_CS#1	Boot BIOS Location
0	1	SPI
1	0	PCI
1	1	LPC*

REQ0#/GNT0#	REQ1#/GNT1#	REQ2#/GNT2#	REQ3#/GNT3#
X	X	X	TI7412

IRQA#	IRQB#	IRQC#	IRQD#	IRQE#	IRQF#	IRQG#	IRQH#
TI7412	X	X	X	TI7412	TI7412	X	EXPRESS CARD

IDSEL
TI7412
AD(22)

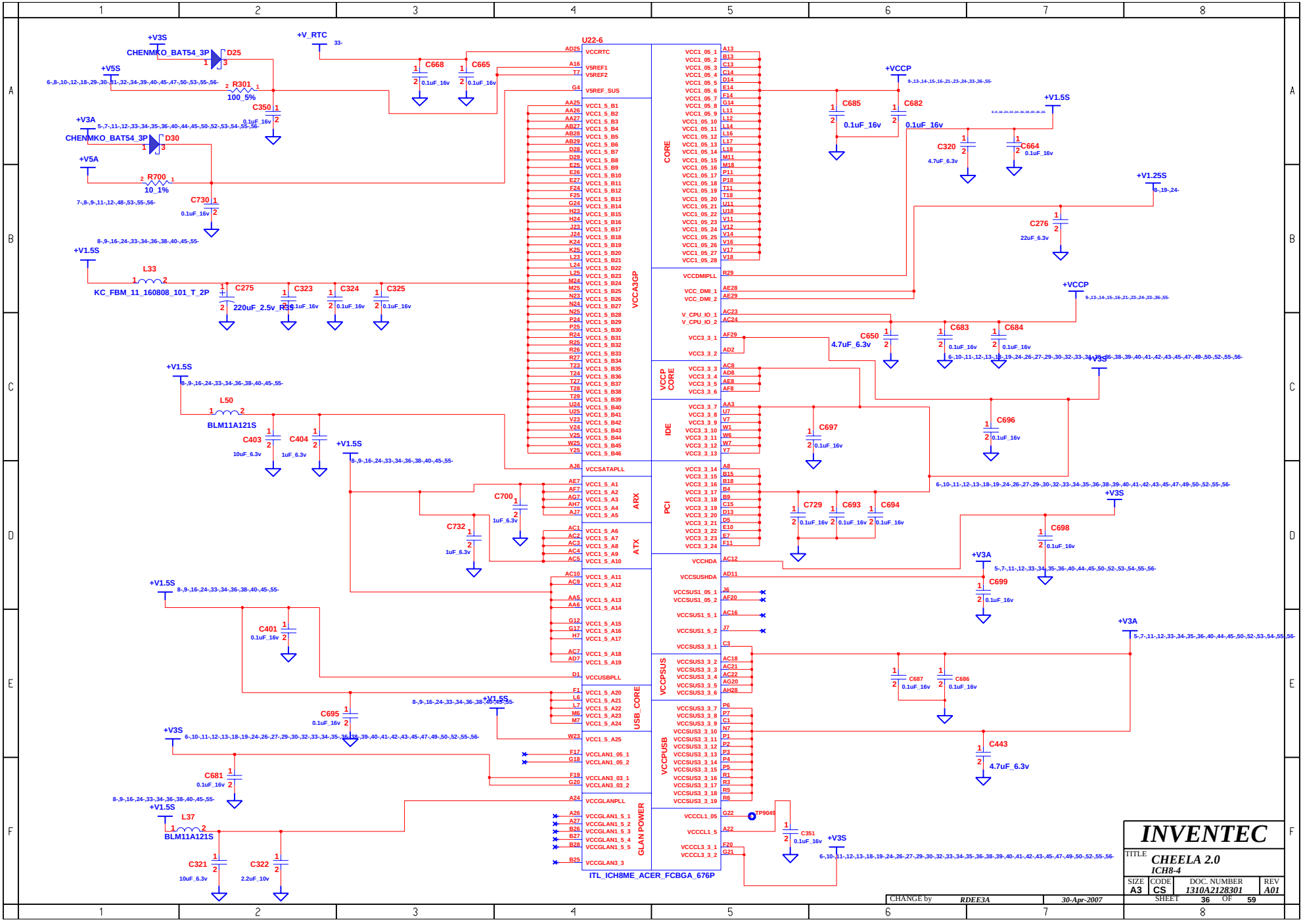
U22-6
ITL_ICH8ME_ACER_FCBGA_676P
CORE
VCCA3GP
VCCP CORE
IDE
PCI
ARX
ATX
USB_CORE
VCCPSUS
VCCPUSB
GLAN POWER
+V3S
CHENMKO_BAT54_3P
D25
+V5S
R301
100_5%
C350
+V3A
D30
+V5A
R700
10_1%
C730
+V1.5S
L33
KC_FBM_11_160808_101_T_2P
C275
220uF_2.5v
C323
C324
C325
+V_RTC
C668
C665
0.1uF_16v
+VCCP
C685
C682
C320
4.7uF_6.3v
C664
+V1.25S
C276
22uF_6.3v
C683
C684
C650
4.7uF_6.3v
C696
C697
L50
BLM11A121S
C403
10uF_6.3v
C404
1uF_6.3v
C700
C732
C729
C693
C694
C698
C699
C401
C695
C687
C686
C443
4.7uF_6.3v
C681
L37
C321
10uF_6.3v
C322
2.2uF_10v
C351
TP9049
INVENTEC
TITLE
CHEELA 2.0
ICH8-4
SIZE A3
CODE CS
DOC. NUMBER 1310A2128301
REV A01
SHEET 36 OF 59
CHANGE by RDEE3A
30-Apr-2007

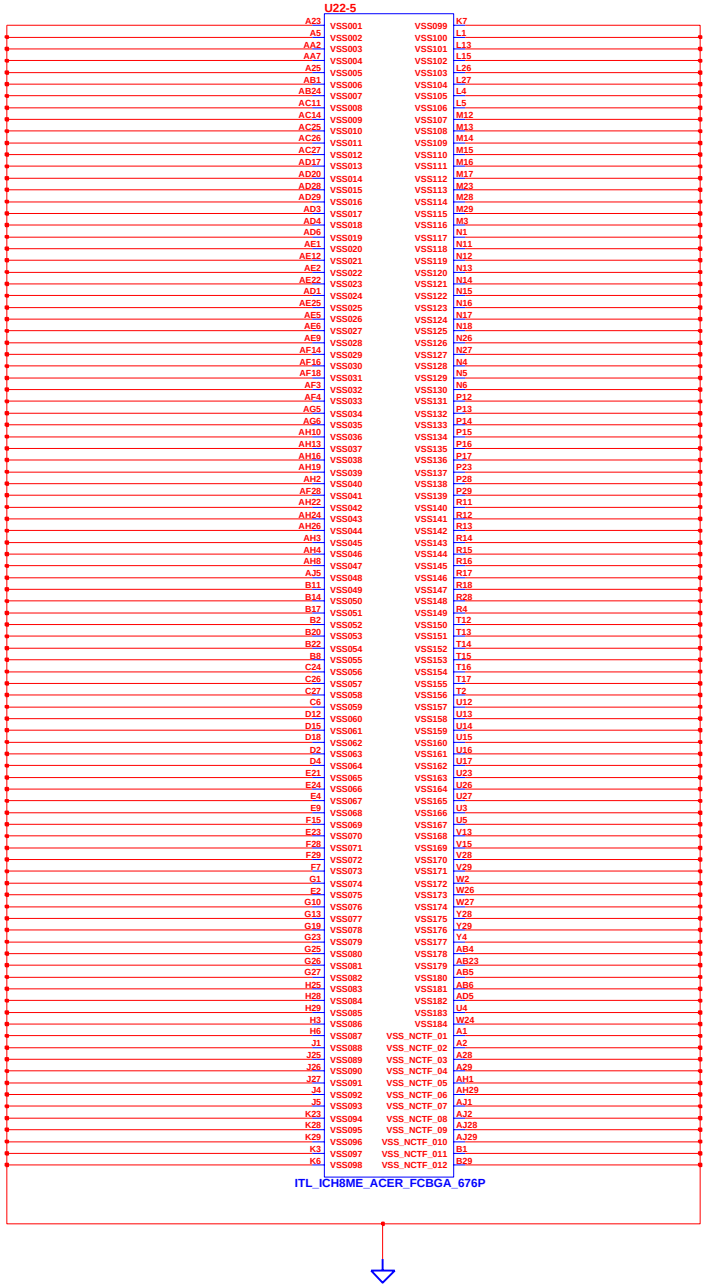

CHANGE by	RDEE3A	30-Apr-2007	

INVENTEC

TITLE: *CHEELA 2.0*
ICH8-5

SIZE	CODE	DOC. NUMBER	REV
A3	CS	1310A2128301	A01

SHEET 37 OF 59

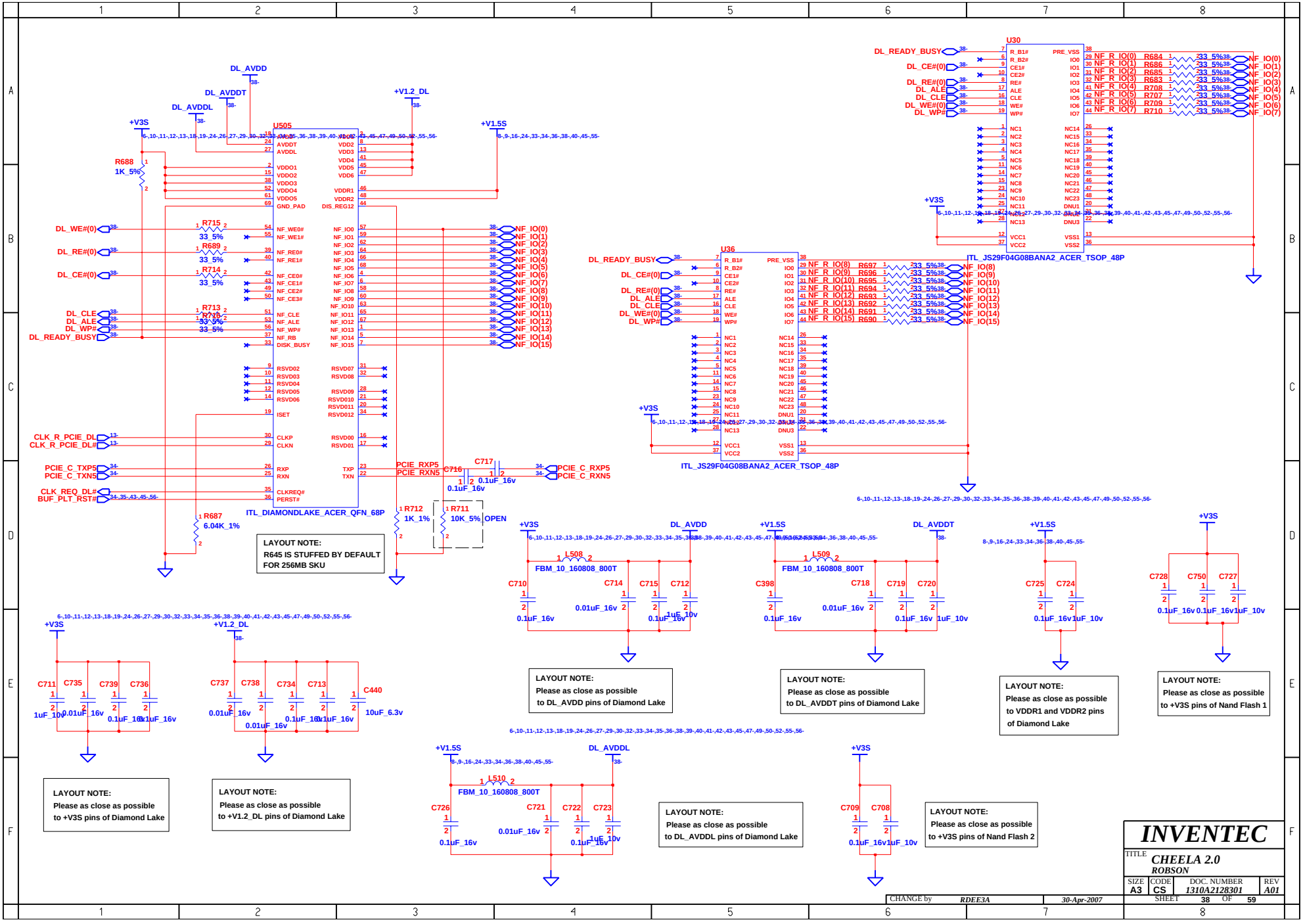
U505
ITL_DIAMONDLAKE_ACER_QFN_68P
U30
ITL_JS29F04G08BANA2_ACER_TSOP_48P
U36
ITL_JS29F04G08BANA2_ACER_TSOP_48P
DL_AVDD
DL_AVDDT
DL_AVDDL
+V3S
+V1.2_DL
+V1.5S
R688 1K_5%
R687 6.04K_1%
R712 1K_1%
R711 10K_5% OPEN
PCIE_RXP5
PCIE_RXN5
PCIE_C_RXP5
PCIE_C_RXN5
PCIE_C_TXP5
PCIE_C_TXN5
CLK_R_PCIE_DL
CLK_R_PCIE_DL#
CLK_REQ_DL#
BUF_PLT_RST#
DL_WE#(0)
DL_RE#(0)
DL_CE#(0)
DL_CLE
DL_ALE
DL_WP#
DL_READY_BUSY
NF_IO(0)
NF_IO(1)
NF_IO(2)
NF_IO(3)
NF_IO(4)
NF_IO(5)
NF_IO(6)
NF_IO(7)
NF_IO(8)
NF_IO(9)
NF_IO(10)
NF_IO(11)
NF_IO(12)
NF_IO(13)
NF_IO(14)
NF_IO(15)
LAYOUT NOTE:
R645 IS STUFFED BY DEFAULT
FOR 256MB SKU
LAYOUT NOTE:
Please as close as possible
to DL_AVDD pins of Diamond Lake
LAYOUT NOTE:
Please as close as possible
to DL_AVDDT pins of Diamond Lake
LAYOUT NOTE:
Please as close as possible
to VDDR1 and VDDR2 pins
of Diamond Lake
LAYOUT NOTE:
Please as close as possible
to +V3S pins of Nand Flash 1
LAYOUT NOTE:
Please as close as possible
to +V3S pins of Diamond Lake
LAYOUT NOTE:
Please as close as possible
to +V1.2_DL pins of Diamond Lake
LAYOUT NOTE:
Please as close as possible
to DL_AVDDL pins of Diamond Lake
LAYOUT NOTE:
Please as close as possible
to +V3S pins of Nand Flash 2
INVENTEC
TITLE
CHEELA 2.0
ROBSON
SIZE A3
CODE CS
DOC. NUMBER 1310A2128301
REV A01
SHEET 38 OF 59
CHANGE by RDEE3A
30-Apr-2007

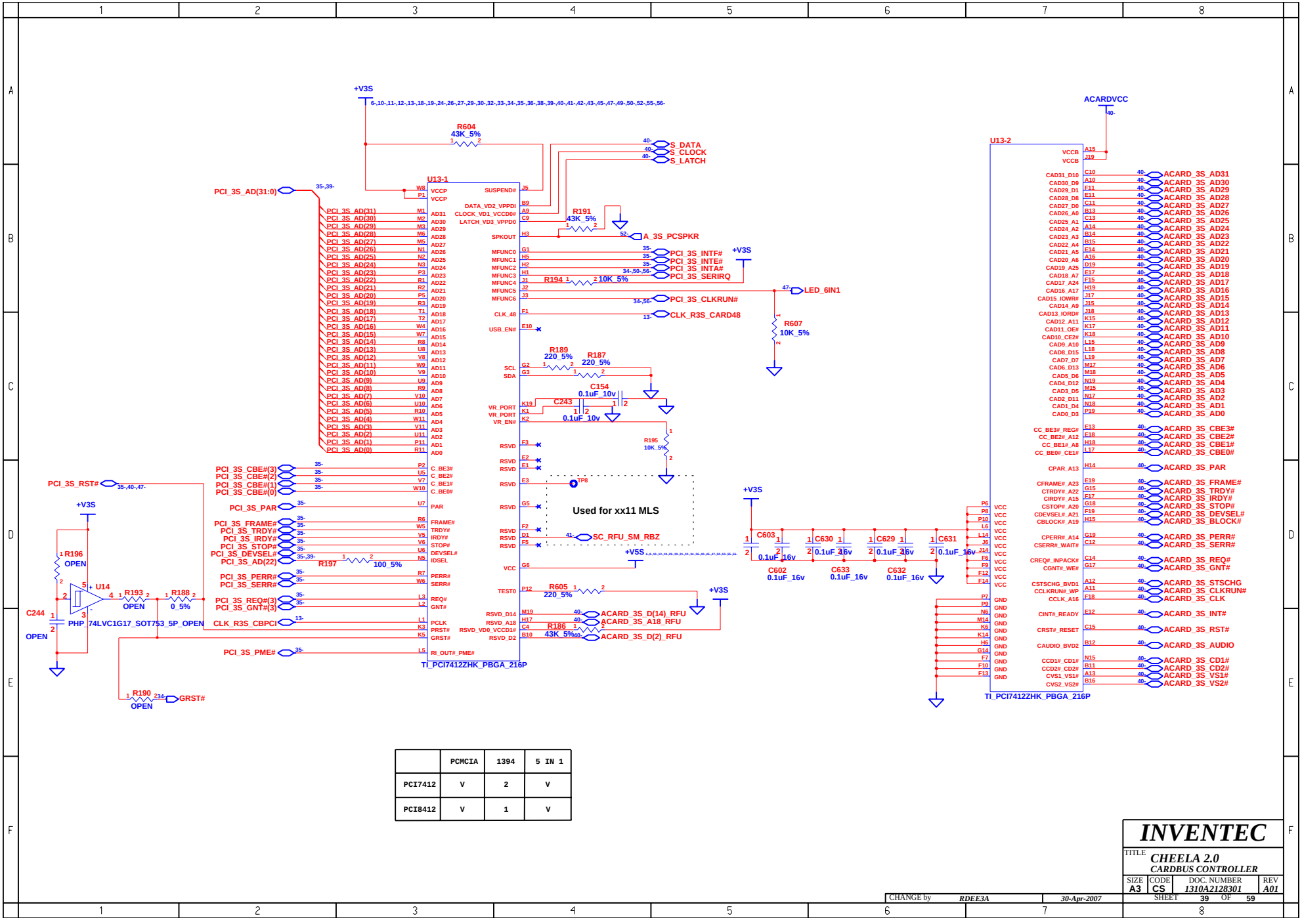

	PCMCIA	1394	5 IN 1
PCI7412	V	2	V
PCI8412	V	1	V

INVENTEC

TITLE CHEELA 2.0
CARDBUS CONTROLLER

SIZE	CODE	DOC. NUMBER	REV
A3	CS	1310A2128301	A01

SHEET 39 OF 59

CHANGE by RDEE3A 30-Apr-2007

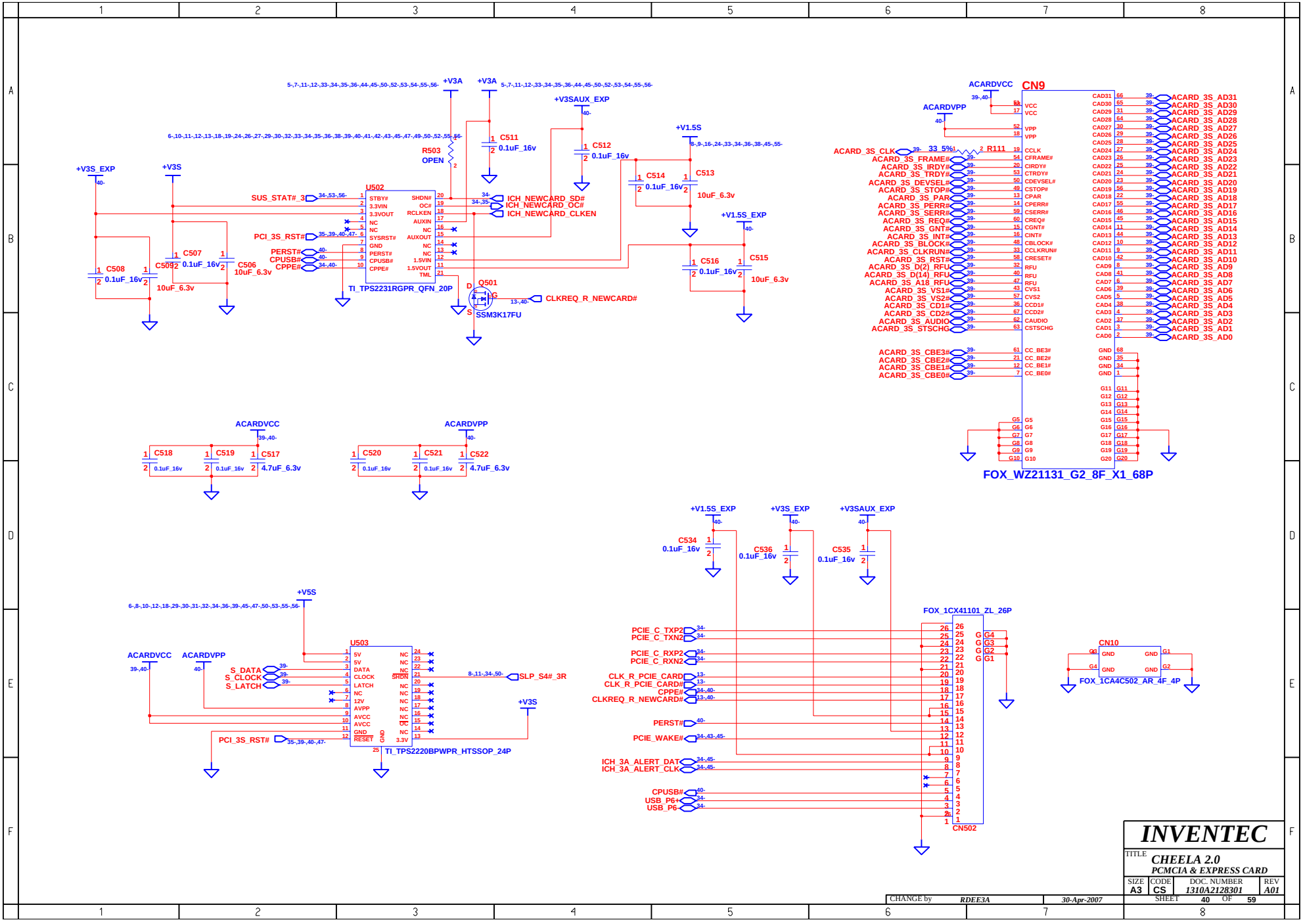
U502
TI_TPS2231RGPR_QFN_20P
STBY#
3.3VIN
3.3VOUT
NC
NC
SYSRST#
GND
PERST#
CPUSB#
CPPE#
SHDN#
OC#
RCLKEN
AUXIN
NC
AUXOUT
NC
NC
1.5VIN
1.5VOUT
TML
SUS_STAT#_3
ICH_NEWCARD_SD#
ICH_NEWCARD_OC#
ICH_NEWCARD_CLKEN
PCI_3S_RST#
PERST#
CPUSB#
CPPE#
CLKREQ_R_NEWCARD#
Q501
SSM3K17FU
R503
OPEN
C511
0.1uF_16v
C512
0.1uF_16v
C513
10uF_6.3v
C514
0.1uF_16v
C515
10uF_6.3v
C516
0.1uF_16v
C507
0.1uF_16v
C508
0.1uF_16v
C509
0.1uF_16v
C506
10uF_6.3v
10uF_6.3v
+V3A
+V3S_EXP
+V3S
+V3SAUX_EXP
+V1.5S
+V1.5S_EXP
ACARDVCC
ACARDVPP
CN9
FOX_WZ21131_G2_8F_X1_68P
ACARD_3S_CLK
R111
33 5%
ACARD_3S_FRAME#
ACARD_3S_IRDY#
ACARD_3S_TRDY#
ACARD_3S_DEVSEL#
ACARD_3S_STOP#
ACARD_3S_PAR
ACARD_3S_PERR#
ACARD_3S_SERR#
ACARD_3S_REQ#
ACARD_3S_GNT#
ACARD_3S_INT#
ACARD_3S_BLOCK#
ACARD_3S_CLKRUN#
ACARD_3S_RST#
ACARD_3S_D(2) RFU
ACARD_3S_D(14) RFU
ACARD_3S_A18 RFU
ACARD_3S_VS1#
ACARD_3S_VS2#
ACARD_3S_CD1#
ACARD_3S_CD2#
ACARD_3S_AUDIO
ACARD_3S_STSCHG
ACARD_3S_CBE3#
ACARD_3S_CBE2#
ACARD_3S_CBE1#
ACARD_3S_CBE0#
ACARD_3S_AD31
ACARD_3S_AD30
ACARD_3S_AD29
ACARD_3S_AD28
ACARD_3S_AD27
ACARD_3S_AD26
ACARD_3S_AD25
ACARD_3S_AD24
ACARD_3S_AD23
ACARD_3S_AD22
ACARD_3S_AD21
ACARD_3S_AD20
ACARD_3S_AD19
ACARD_3S_AD18
ACARD_3S_AD17
ACARD_3S_AD16
ACARD_3S_AD15
ACARD_3S_AD14
ACARD_3S_AD13
ACARD_3S_AD12
ACARD_3S_AD11
ACARD_3S_AD10
ACARD_3S_AD9
ACARD_3S_AD8
ACARD_3S_AD7
ACARD_3S_AD6
ACARD_3S_AD5
ACARD_3S_AD4
ACARD_3S_AD3
ACARD_3S_AD2
ACARD_3S_AD1
ACARD_3S_AD0
C518
0.1uF_16v
C519
0.1uF_16v
C517
4.7uF_6.3v
C520
0.1uF_16v
C521
0.1uF_16v
C522
4.7uF_6.3v
C534
0.1uF_16v
C536
0.1uF_16v
C535
0.1uF_16v
U503
TI_TPS2220BPWPR_HTSSOP_24P
+V5S
S_DATA
S_CLOCK
S_LATCH
SLP_S4#_3R
PCI_3S_RST#
FOX_1CX41101_ZL_26P
CN502
PCIE_C_TXP2
PCIE_C_TXN2
PCIE_C_RXP2
PCIE_C_RXN2
CLK_R_PCIE_CARD
CLK_R_PCIE_CARD#
CPPE#
CLKREQ_R_NEWCARD#
PERST#
PCIE_WAKE#
ICH_3A_ALERT_DAT
ICH_3A_ALERT_CLK
CPUSB#
USB_P6+
USB_P6-
CN10
FOX_1CA4C502_AR_4F_4P
INVENTEC
TITLE
CHEELA 2.0
PCMCIA & EXPRESS CARD
SIZE A3
CODE CS
DOC. NUMBER 1310A2128301
REV A01
SHEET 40 OF 59
CHANGE by RDEE3A
30-Apr-2007

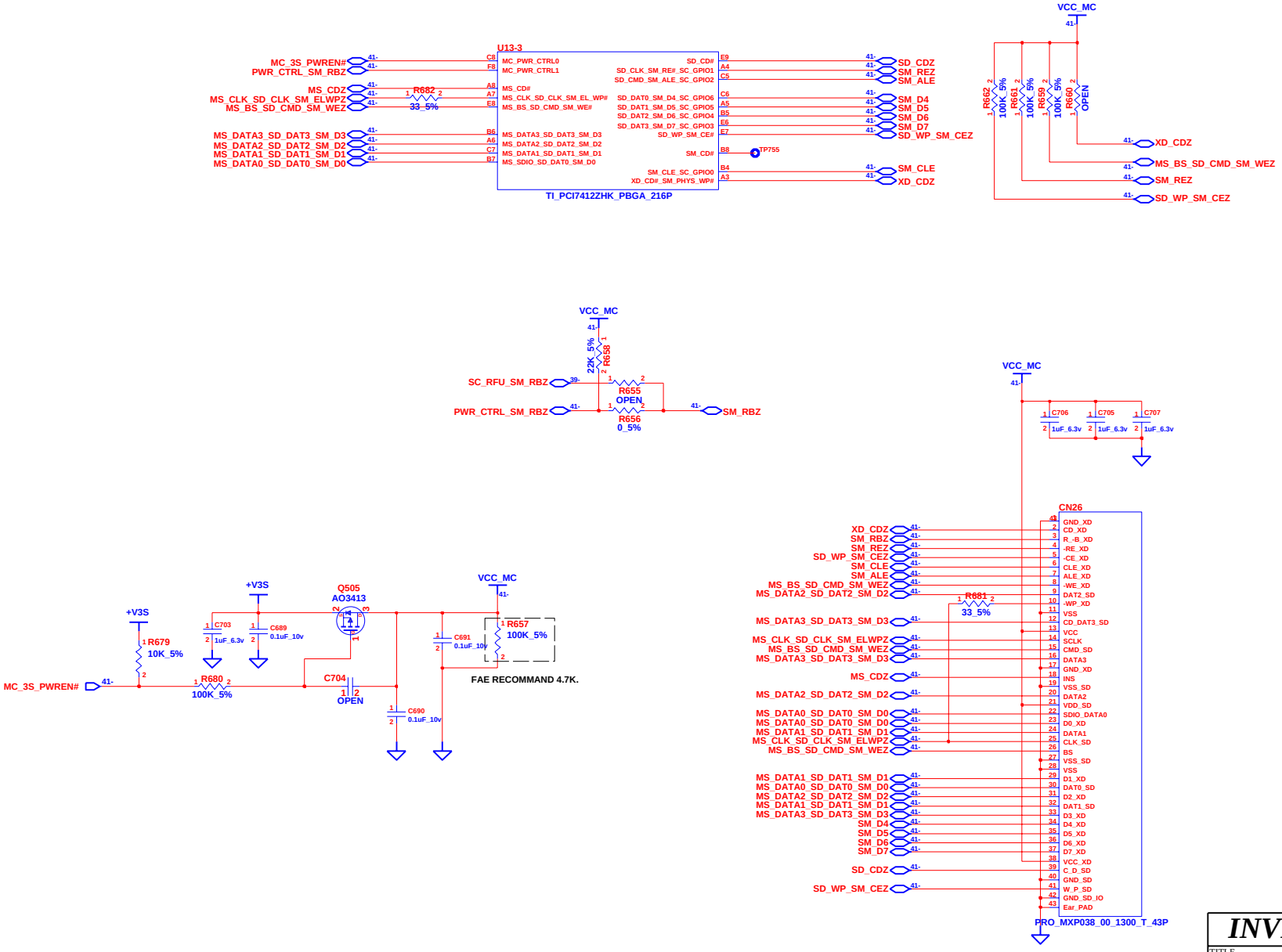

CHANGE by	RDEE3A	30-Apr-2007	

INVENTEC

TITLE
CHEELA 2.0
6 IN 1 CARD CONN

SIZE	CODE	DOC. NUMBER	REV
A3	CS	1310A2128301	A01

SHEET 41 OF 59

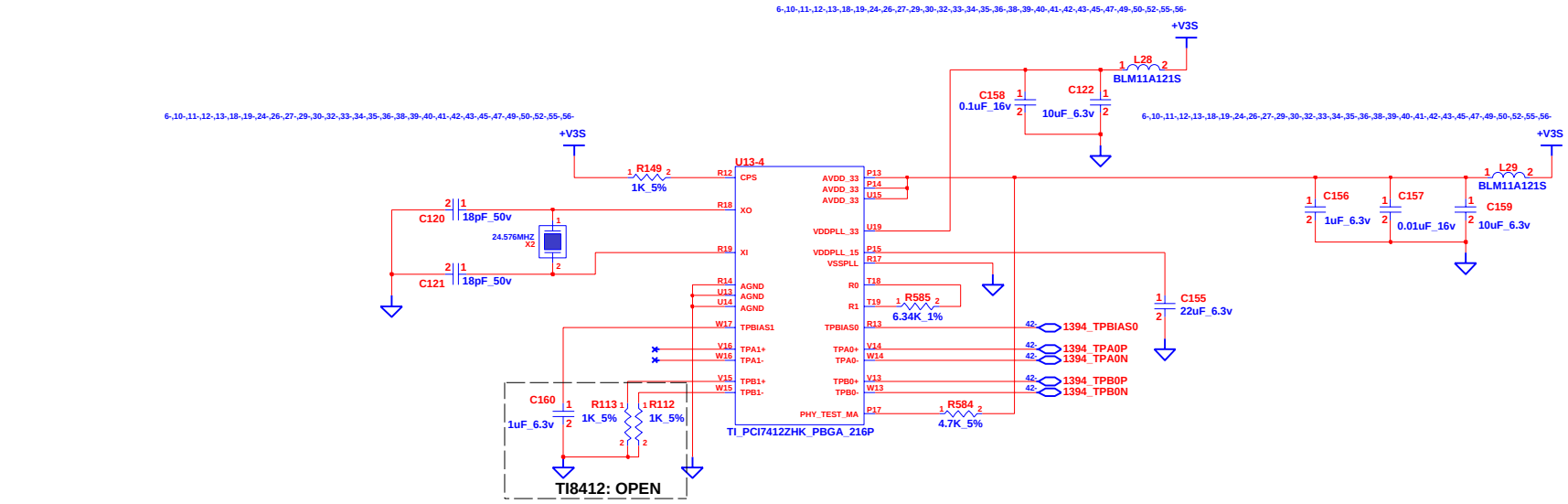

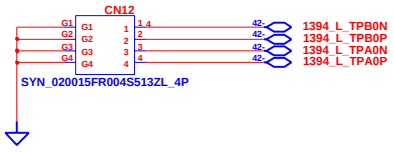

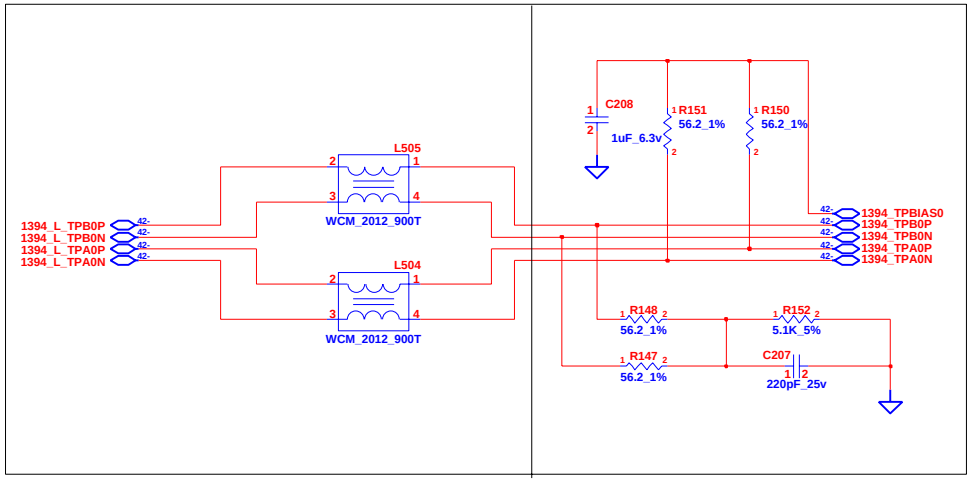

NEAR TO CN

NEAR TO IC

INVENTEC			
TITLE CHEELA 2.0 1394			
SIZE A3	CODE CS	DOC. NUMBER 1310A2128301	REV A01
CHANGE by RDEE3A	30-Apr-2007	SHEET 42 OF 59	

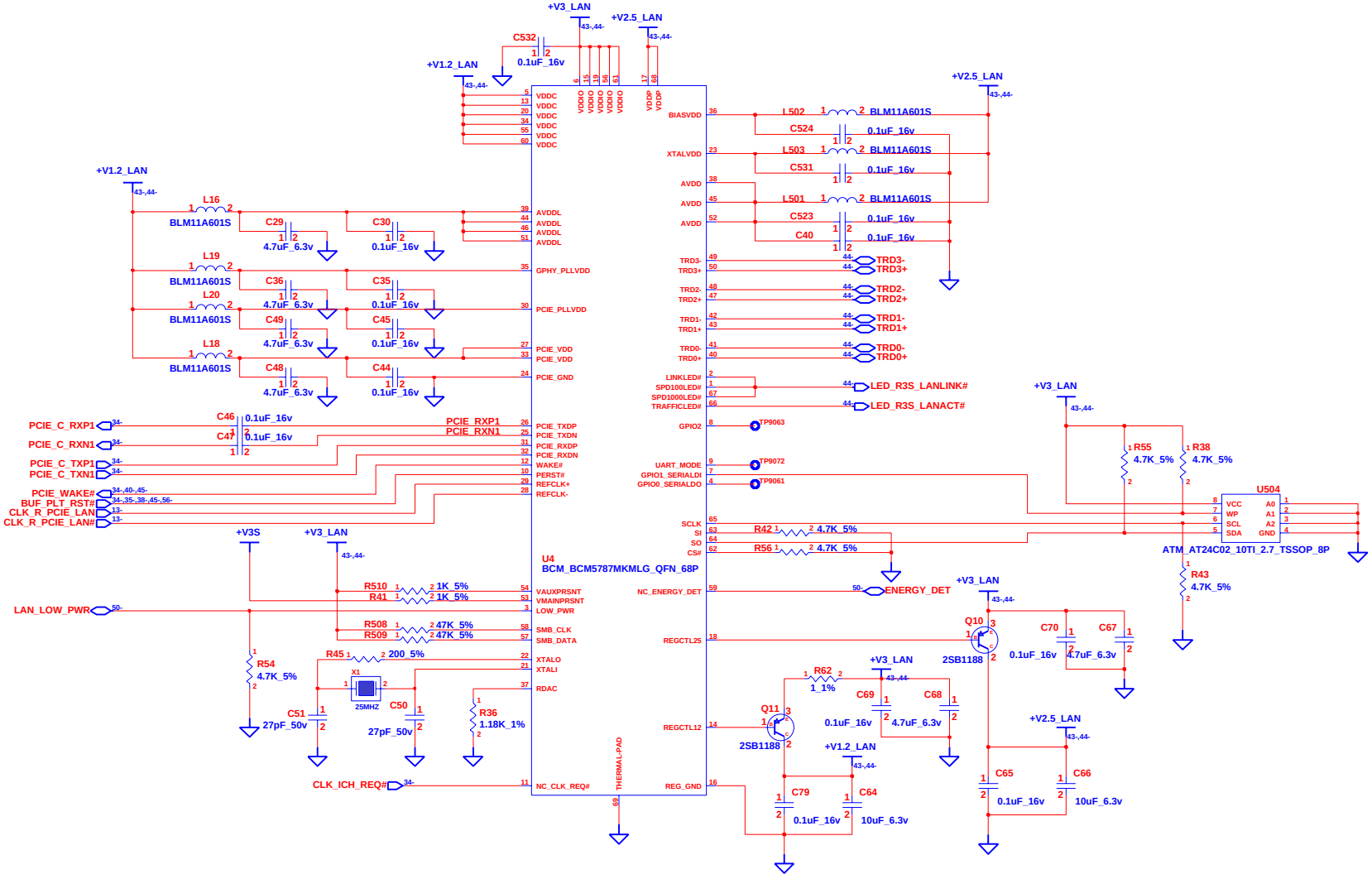

CHANGE by	RDEE3A	30-Apr-2007	

INVENTEC

TITLE **CHEELA 2.0**
LAN CONTROLLER

SIZE	CODE	DOC. NUMBER	REV
A3	CS	1310A2128301	A01

SHEET 43 OF 59

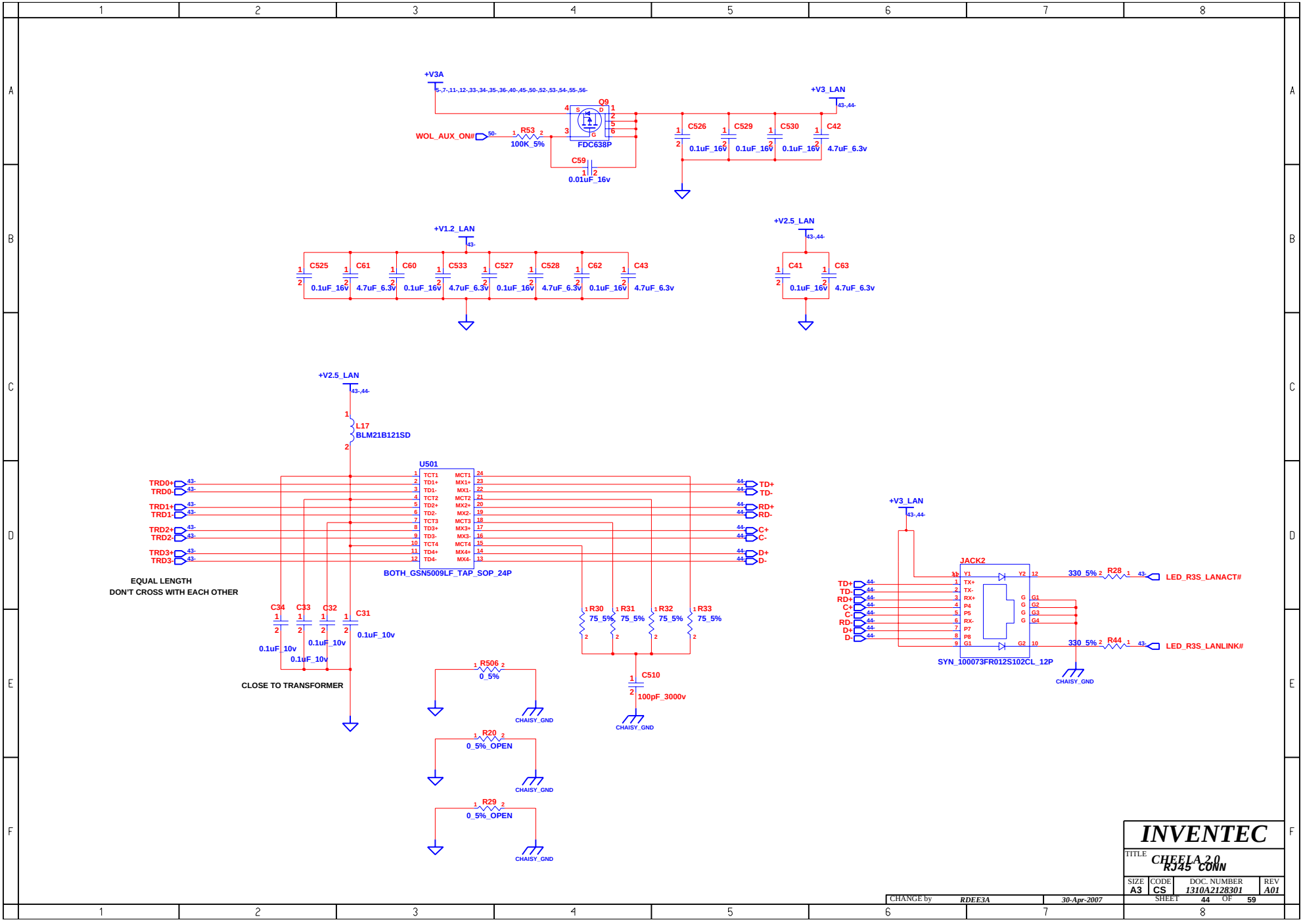

CHANGE by	RDEE3A	30-Apr-2007	

INVENTEC

TITLE CHEELA 2.0
RJ45 CONN

SIZE	CODE	DOC. NUMBER	REV
A3	CS	1310A2128301	A01

SHEET 44 OF 59

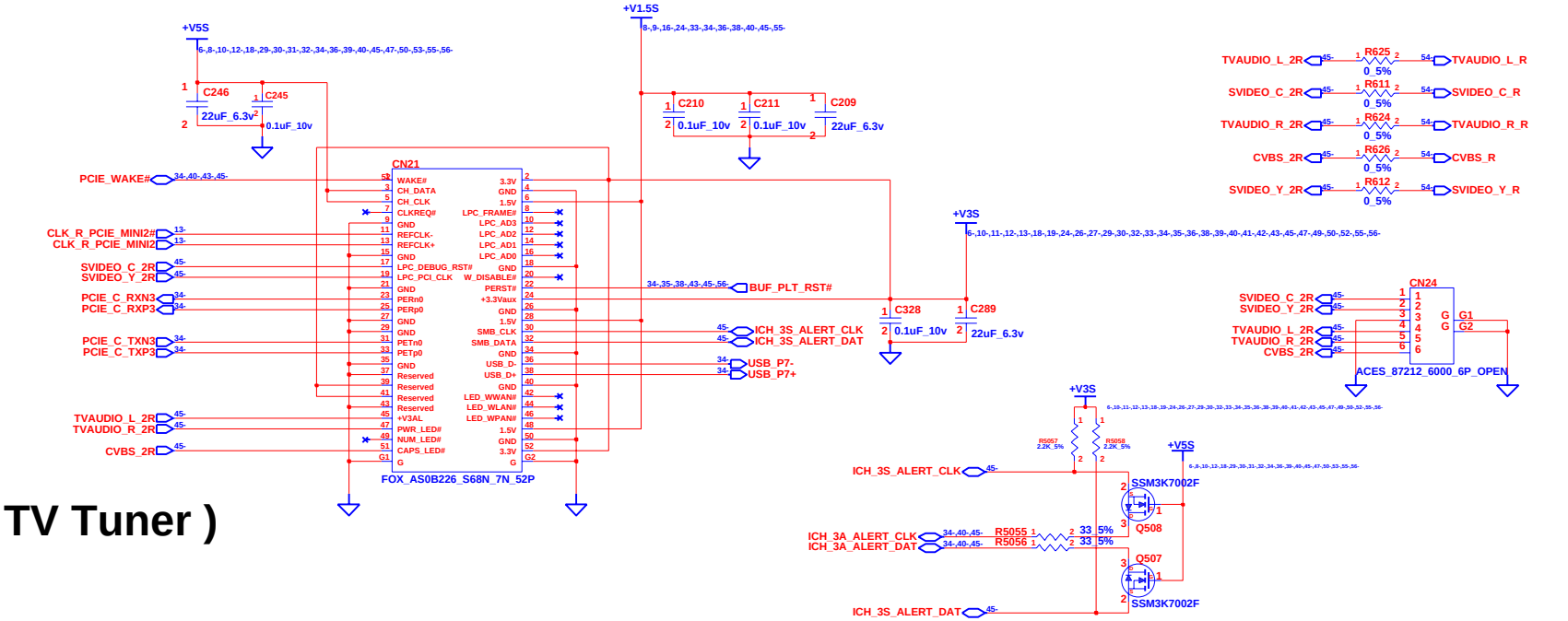

INVENTEC			
TITLE CHEELA 2.0 MINI CARD			
SIZE A3	CODE CS	DOC. NUMBER 1310A2128301	REV A01
CHANGE by RDEE3A	30-Apr-2007	SHEET 45 OF 59	

CHANGE by	RDEE3A
	30-Apr-2007

INVENTEC

TITLE *CHEELA 2.0*

SIZE	CODE	DOC. NUMBER	REV
A3	CS	1310A2128301	A01

SHEET 46 OF 59

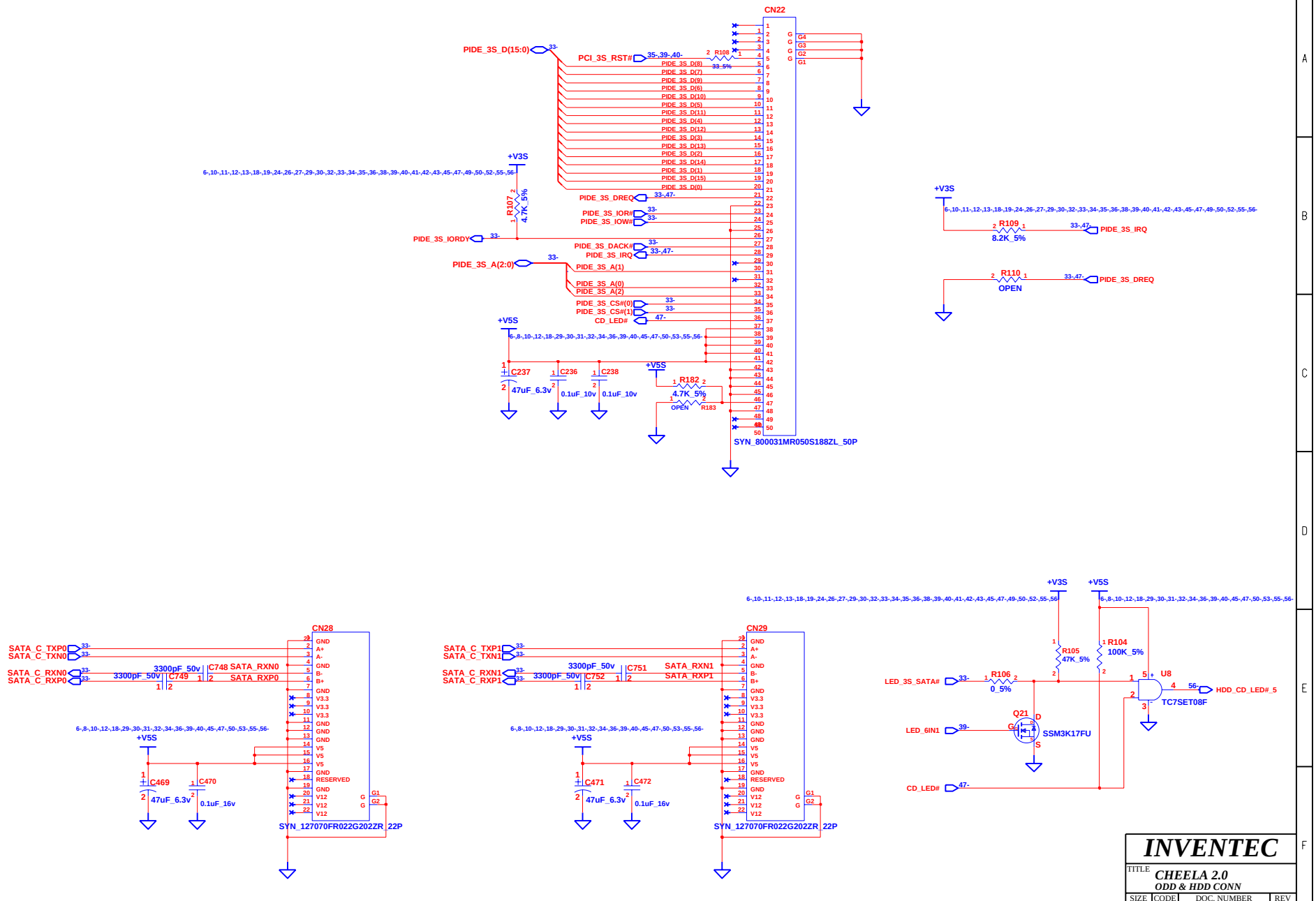

INVENTEC

TITLE
CHEELA 2.0
ODD & HDD CONN

SIZE	CODE	DOC. NUMBER	REV
A3	CS	1310A2128301	A01

SHEET 47 OF 59

CHANGE by RDEE3A 30-Apr-2007

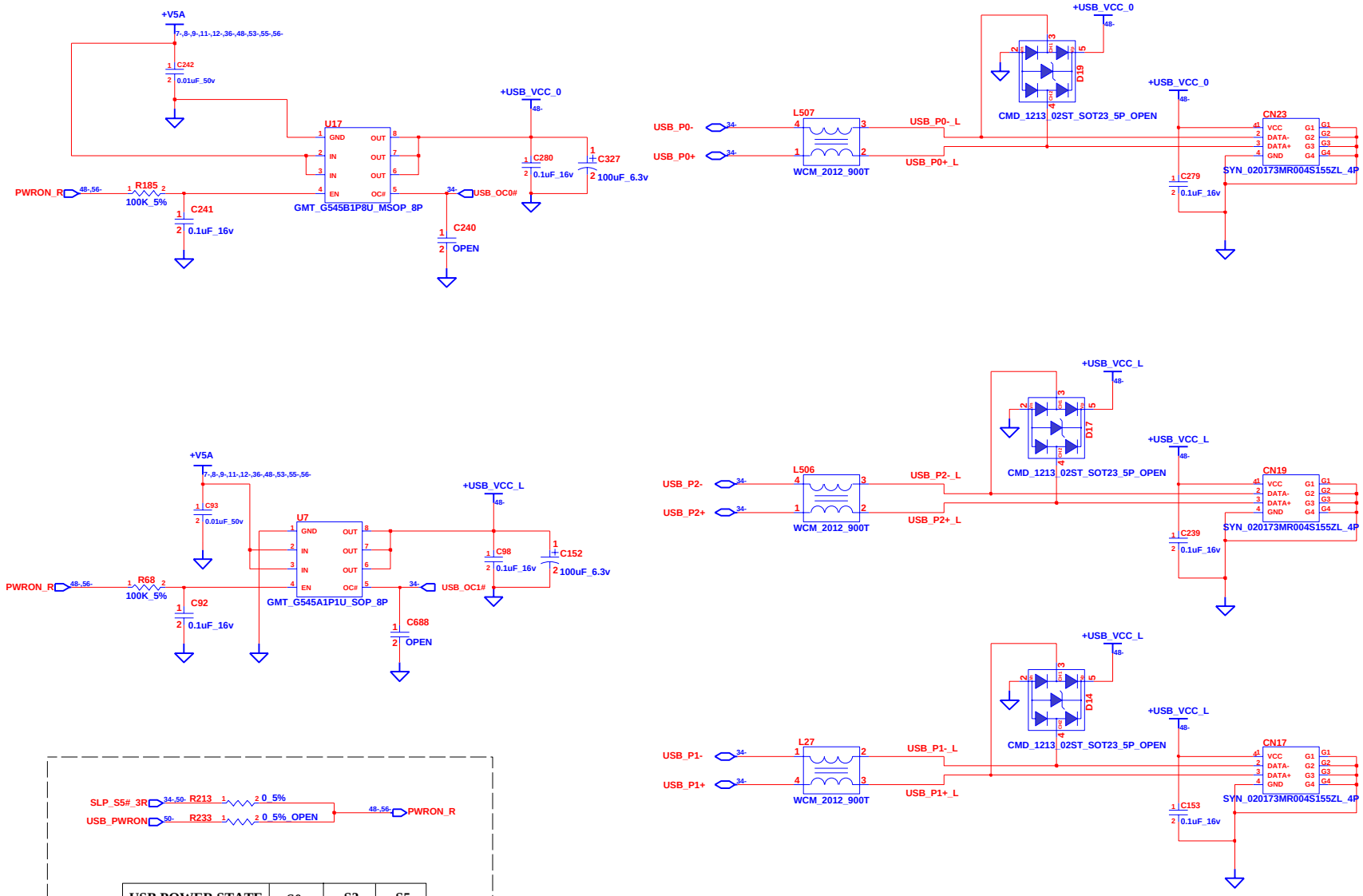

USB POWER STATE	S0	S3	S5
AC MODE	ON	ON	OFF
DC MODE	ON	ON	OFF

INVENTEC

TITLE CHEELA 2.0
USB CONN

SIZE	CODE	DOC. NUMBER	REV
A3	CS	1310A2128301	A01

SHEET 48 OF 59

CHANGE by RDEE3A 30-Apr-2007

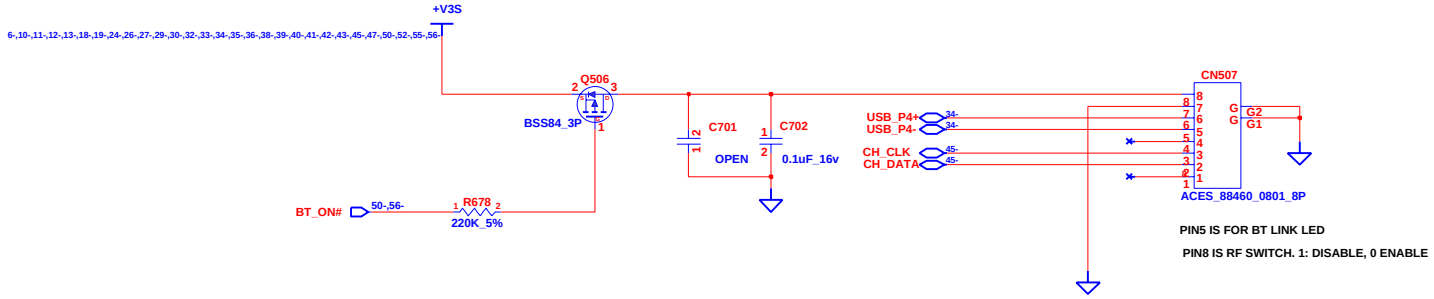

PIN5 IS FOR BT LINK LED

PIN8 IS RF SWITCH. 1: DISABLE, 0 ENABLE

BLUE TOOTH

CHANGE by	RDEE3A	30-Apr-2007	

INVENTEC

TITLE *CHEELA 2.0*
BLUETOOTH

SIZE	CODE	DOC. NUMBER	REV
A3	CS	1310A2128301	A01

SHEET 49 OF 59

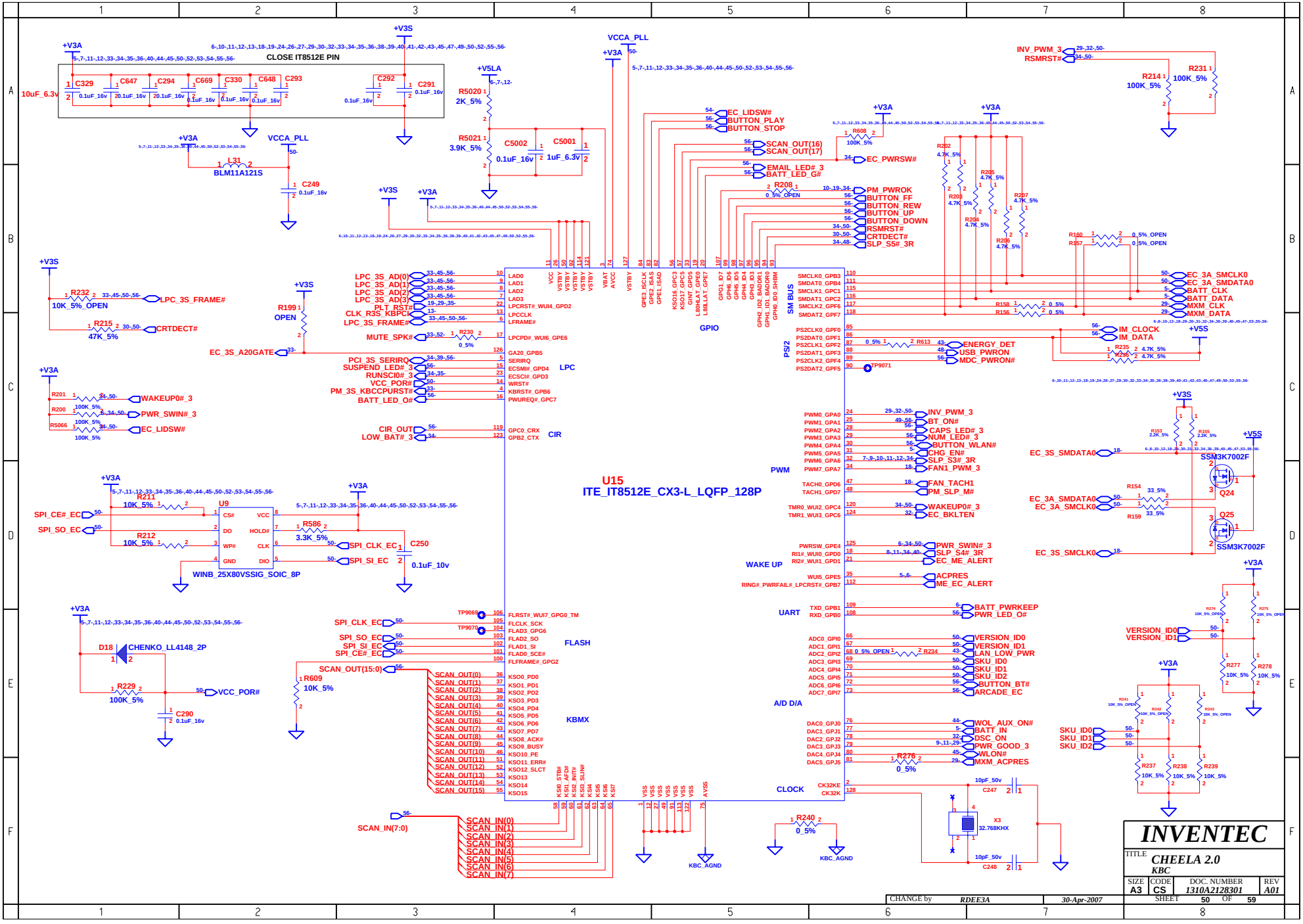
CLOSE IT8512E PIN
U15
ITE_IT8512E_CX3-L_LQFP_128P
LPC
GPIO
SM BUS
PSI/2
PWM
WAKE UP
UART
A/D D/A
CLOCK
FLASH
KBMX
CIR
WINB_25X80VSSIG_SOIC_8P
INVENTEC
TITLE
CHEELA 2.0
KBC
SIZE
A3
CODE
CS
DOC. NUMBER
1310A2128301
REV
A01
SHEET
50
OF
59
CHANGE by
RDEE3A
30-Apr-2007

1	2	3	4	5	6	7	8

A B C D E F

CHANGE by RDEE3A 30-Apr-2007

INVENTEC

TITLE *CHEELA 2.0*

SIZE	CODE	DOC. NUMBER	REV
A3	CS	1310A2128301	A01

SHEET 51 OF 59

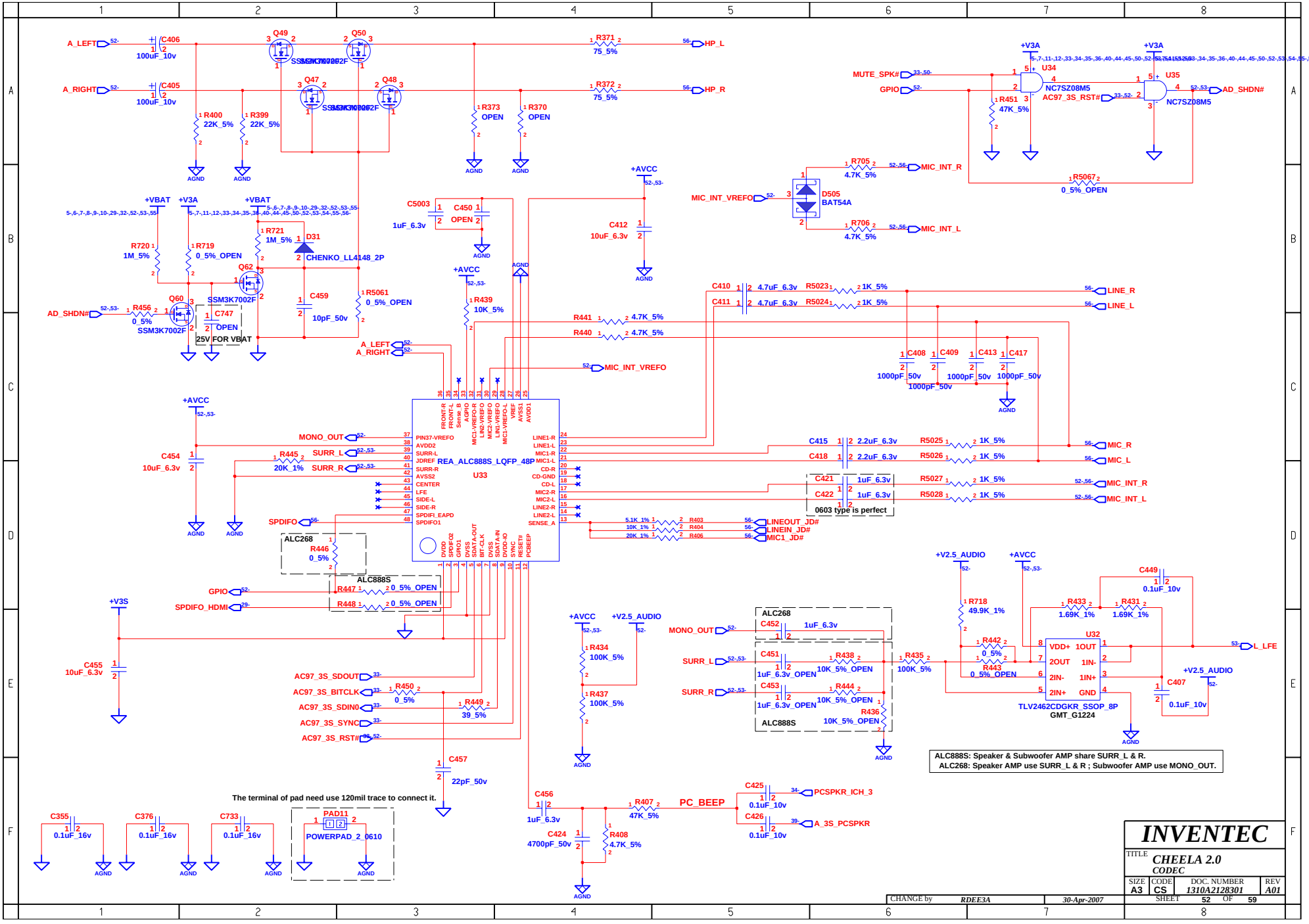
A_LEFT
A_RIGHT
C406 100uF_10v
C405 100uF_10v
Q49
Q50
Q47
Q48
R400 22K_5%
R399 22K_5%
R371 75_5%
R372 75_5%
R373 OPEN
R370 OPEN
HP_L
HP_R
AGND
+V3A
MUTE_SPK#
GPIO
U34 NC7SZ08M5
AC97_3S_RST#
U35 NC7SZ08M5
AD_SHDN#
R451 47K_5%
R5067 0_5%_OPEN
R705 4.7K_5%
R706 4.7K_5%
MIC_INT_R
MIC_INT_L
MIC_INT_VREFO
D505 BAT54A
+AVCC
C412 10uF_6.3v
C5003 1uF_6.3v
C450 OPEN
+VBAT
R720 1M_5%
R719 0_5%_OPEN
R721 1M_5%
D31 CHENKO_LL4148_2P
Q62 SSM3K7002F
Q60 SSM3K7002F
R456 0_5%
C747 OPEN
25V FOR VBAT
C459 10pF_50v
R5061 0_5%_OPEN
R439 10K_5%
C410 4.7uF_6.3v
C411 4.7uF_6.3v
R5023 1K_5%
R5024 1K_5%
LINE_R
LINE_L
R441 4.7K_5%
R440 4.7K_5%
C408 1000pF_50v
C409 1000pF_50v
C413 1000pF_50v
C417 1000pF_50v
C454 10uF_6.3v
MONO_OUT
SURR_L
SURR_R
R445 20K_1%
SPDIFO
REA_ALC888S_LQFP_48P
U33
C415 2.2uF_6.3v
C418 2.2uF_6.3v
R5025 1K_5%
R5026 1K_5%
MIC_R
MIC_L
C421 1uF_6.3v
C422 1uF_6.3v
R5027 1K_5%
R5028 1K_5%
0603 type is perfect
R403 5.1K_1%
R404 10K_1%
R406 20K_1%
LINEOUT_JD#
LINEIN_JD#
MIC1_JD#
ALC268
R446 0_5%
ALC888S
R447 0_5%_OPEN
R448 0_5%_OPEN
GPIO
SPDIFO_HDMI
+V3S
C455 10uF_6.3v
AC97_3S_SDOUT
AC97_3S_BITCLK
AC97_3S_SDIN0
AC97_3S_SYNC
AC97_3S_RST#
R450 0_5%
R449 39_5%
C457 22pF_50v
+V2.5_AUDIO
R434 100K_5%
R437 100K_5%
C452 1uF_6.3v
C451 1uF_6.3v_OPEN
C453 1uF_6.3v_OPEN
R438 10K_5%_OPEN
R444 10K_5%_OPEN
R436 10K_5%_OPEN
R435 100K_5%
R718 49.9K_1%
R442 0_5%
R443 0_5%_OPEN
R433 1.69K_1%
R431 1.69K_1%
C449 0.1uF_10v
U32 TLV2462CDGKR_SSOP_8P
GMT_G1224
VDD+ 1OUT 2OUT 1IN- 2IN- 1IN+ 2IN+ GND
L_LFE
C407 0.1uF_10v
ALC888S: Speaker & Subwoofer AMP share SURR_L & R.
ALC268: Speaker AMP use SURR_L & R ; Subwoofer AMP use MONO_OUT.
The terminal of pad need use 120mil trace to connect it.
C355 0.1uF_16v
C376 0.1uF_16v
C733 0.1uF_16v
PAD11 POWERPAD_2_0610
C456 1uF_6.3v
C424 4700pF_50v
R407 47K_5%
R408 4.7K_5%
PC_BEEP
C425 0.1uF_10v
C426 0.1uF_10v
PCSPKR_ICH_3
A_3S_PCSPKR
INVENTEC
TITLE CHEELA 2.0 CODEC
SIZE A3
CODE CS
DOC. NUMBER 1310A2128301
REV A01
SHEET 52 OF 59
CHANGE by RDEE3A
30-Apr-2007

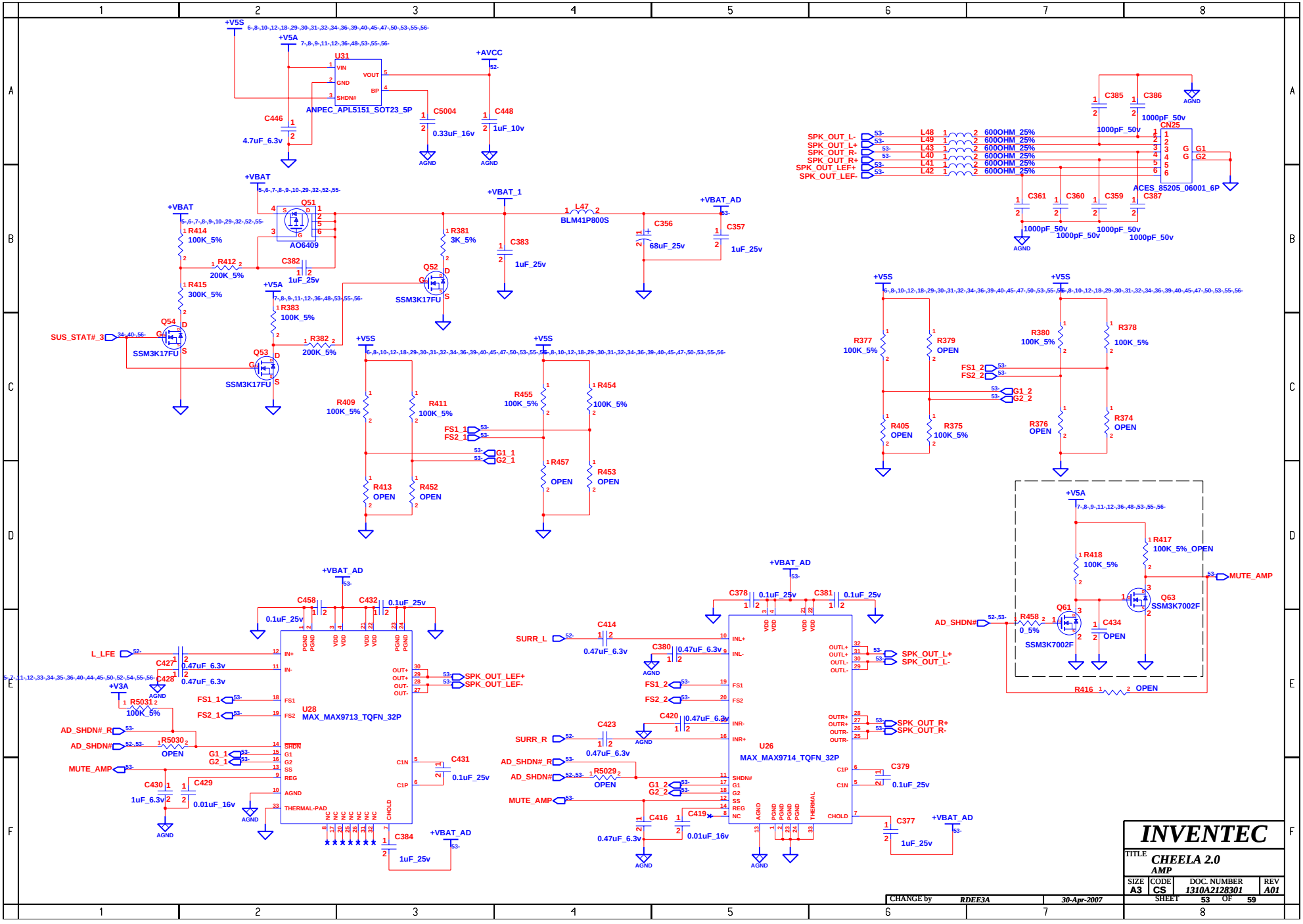

CHANGE by	RDEE3A	30-Apr-2007	

INVENTEC

TITLE **CHEELA 2.0**
AMP

SIZE	CODE	DOC. NUMBER	REV
A3	CS	1310A2128301	A01

SHEET 53 OF 59

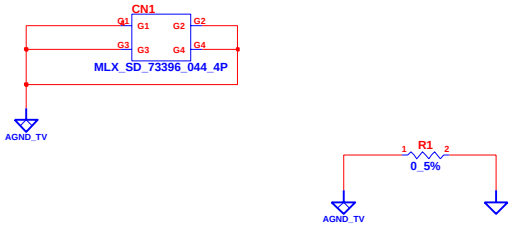

TV ANT

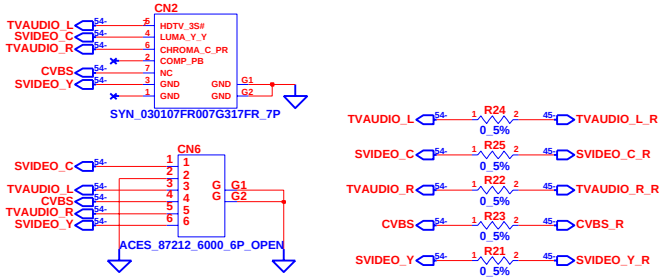

AV IN

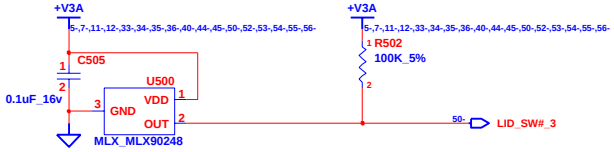

LID SWITCH

CHANGE by	RDEE3A	30-Apr-2007	

INVENTEC

TITLE *CHEELA 2.0*
TV CONN & LID SWITCH

SIZE	CODE	DOC. NUMBER	REV
A3	CS	1310A2128301	A01

SHEET 54 OF 59

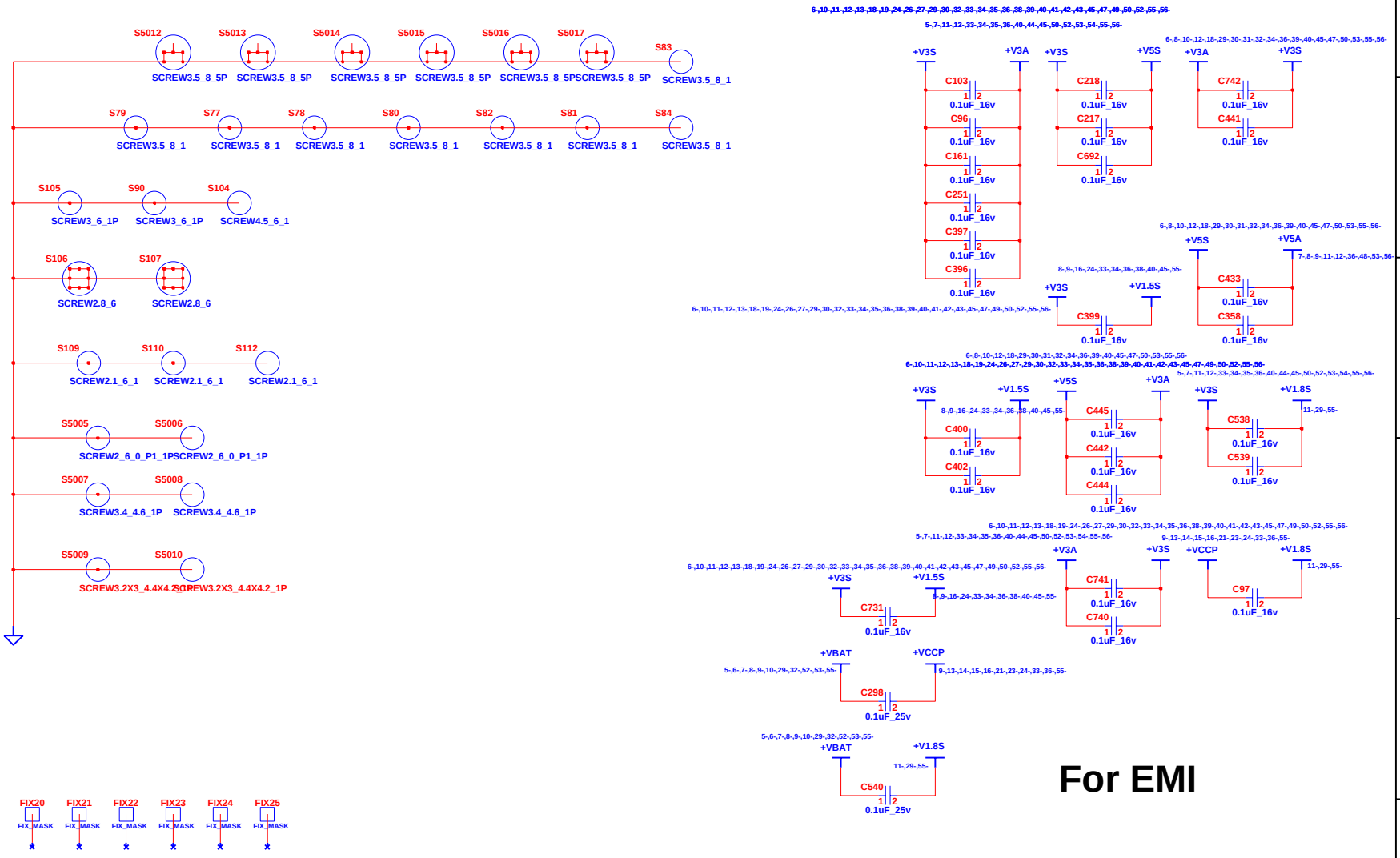

For EMI

CHANGE by	RDEE3A	30-May-2007			

INVENTEC

TITLE: *CHEELA 2.0*
SCREW&EMC SOLUTION

SIZE	CODE	DOC. NUMBER	REV
A3	CS	1310A2128301	A01

SHEET 55 OF 59

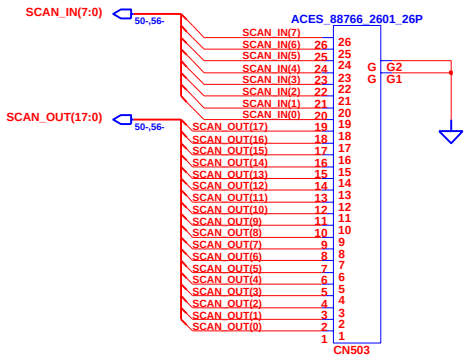

KEYBOARD CNTR

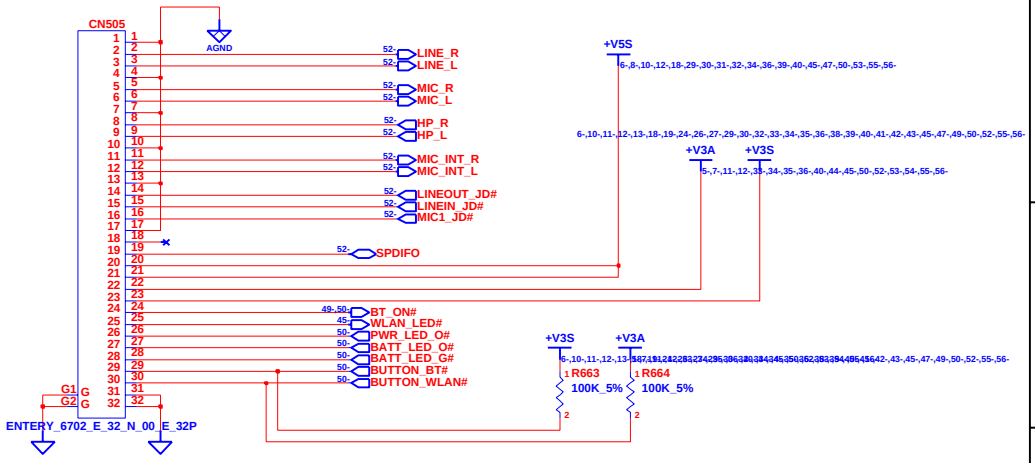

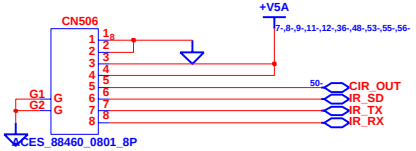

TO AUDIO BOARD

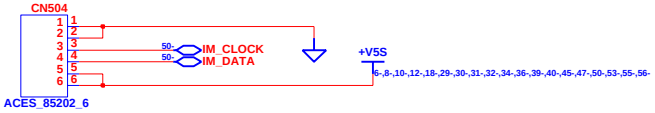

TO TOUCHPAD BOARD

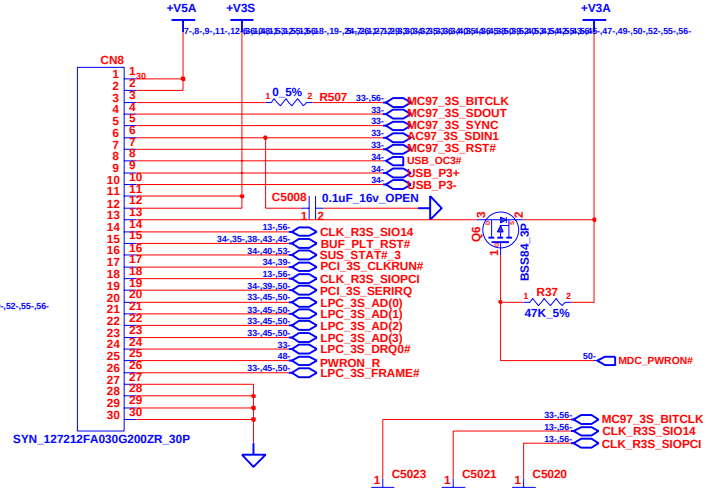

TO I/O BOARD

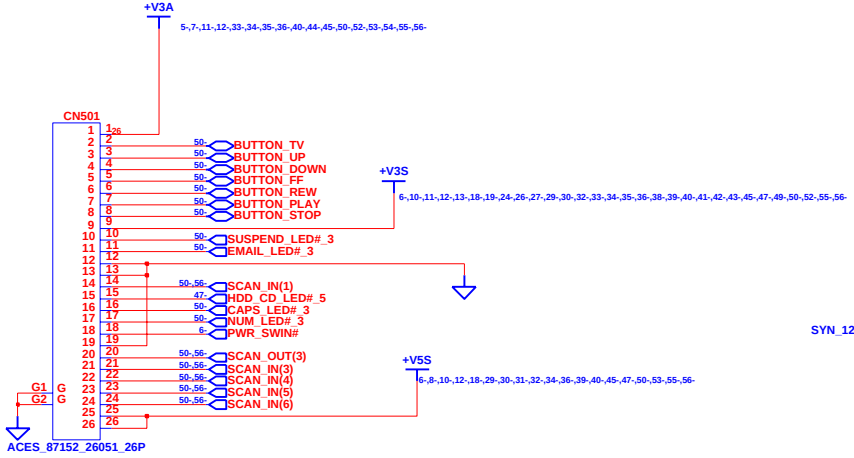

TO HOTKEY BOARD

CHANGE by	RDEE3A	15-Jun-2007

INVENTEC

TITLE: *CHEELA 2.0*
TO OTHER BOARD CONN

SIZE	CODE	DOC. NUMBER	REV
A3	CS	1310A2128301	A01

SHEET 56 OF 59

Hotkey Board

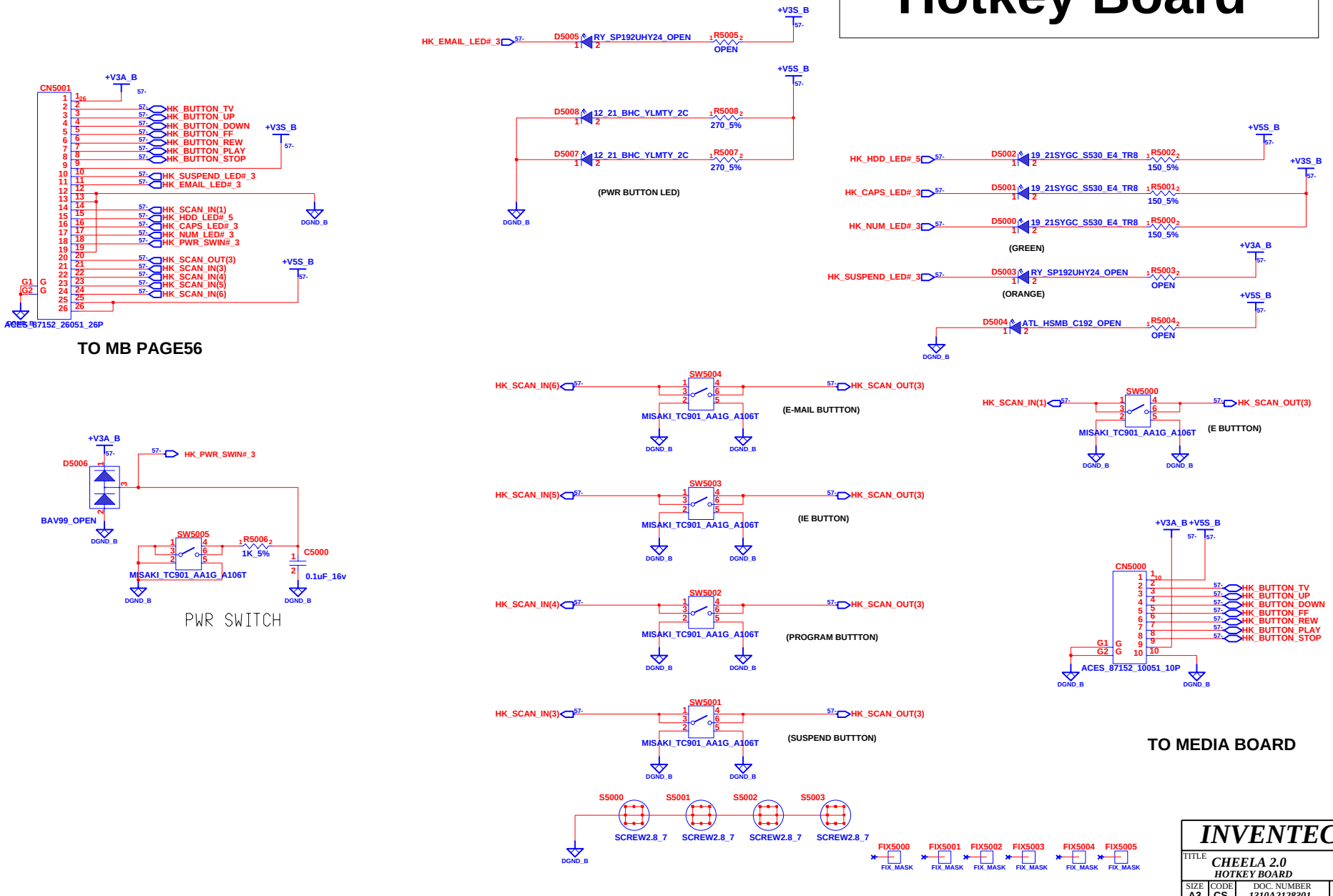

CHANGE by	RDEE3A	30-Apr-2007	

INVENTEC

TITLE CHEELA 2.0
HOTKEY BOARD

SIZE	CODE	DOC. NUMBER	REV
A3	CS	1310A2128301	A01

SHEET 57 OF 59

MEDIA Board

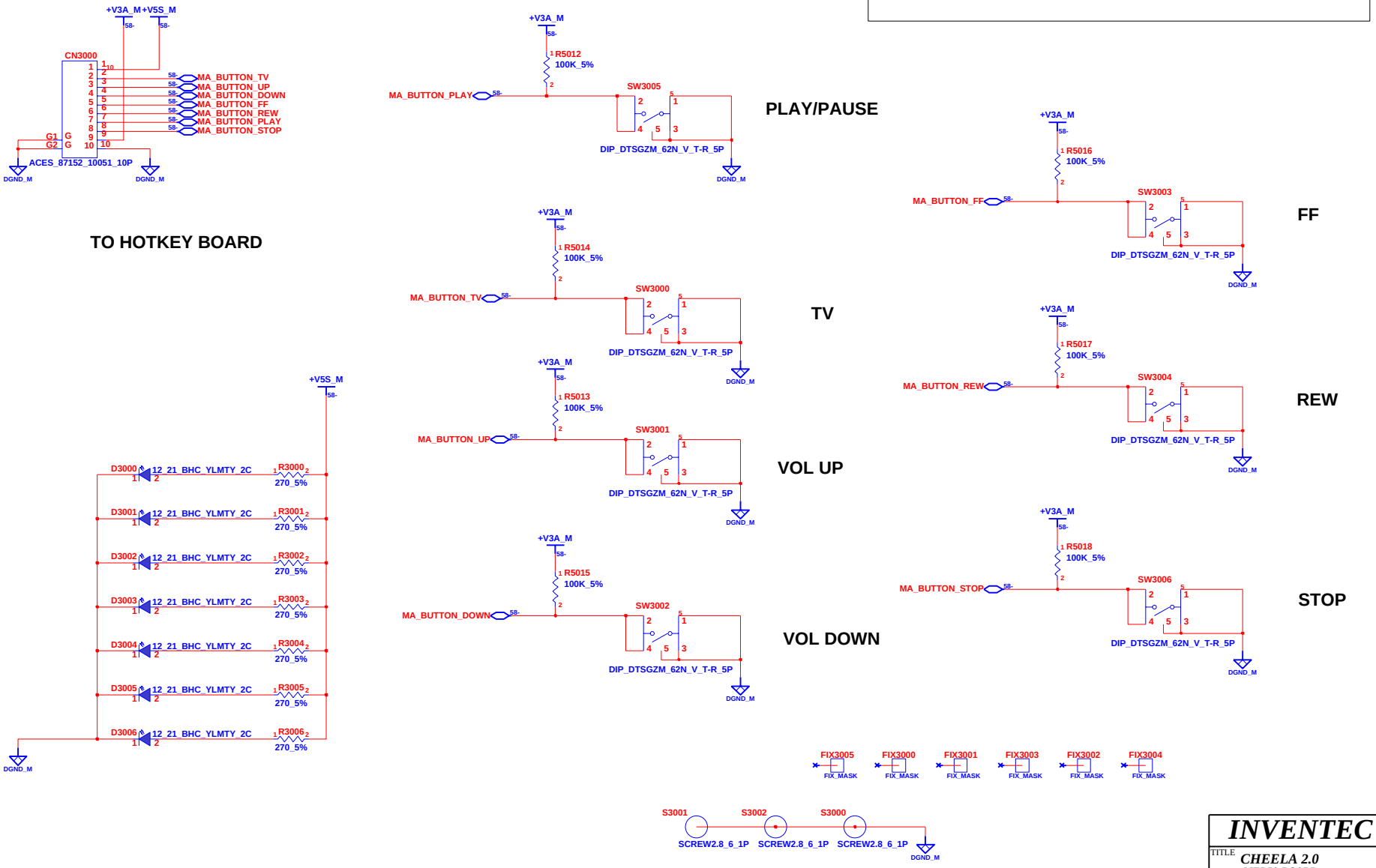

INVENTEC			
TITLE CHEELA 2.0 MEDIA BOARD			
SIZE A3	CODE CS	DOC. NUMBER 1310A2128301	REV A01
CHANGE by RDEE3A	30-Apr-2007	SHEET 58 OF 59	

TOUCH PAD BUTTON BOARD

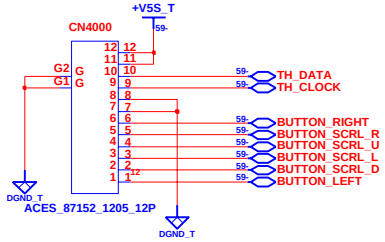

TO TOUCH PAD

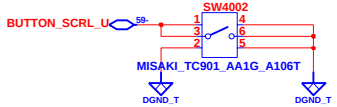

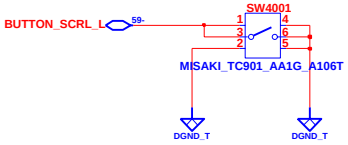

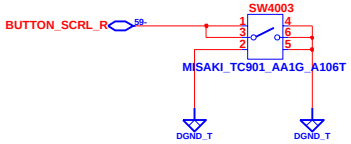

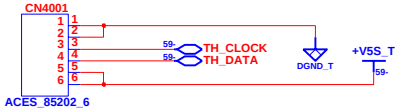

TO MB PAGE 56

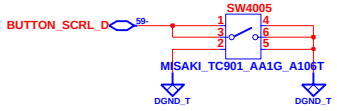

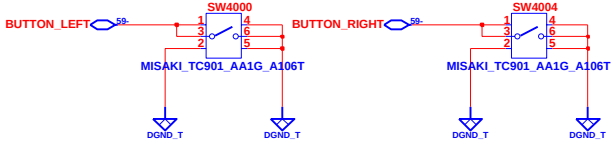

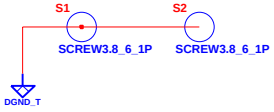

CHANGE by	RDEE3A	30-Apr-2007	

INVENTEC

TITLE: CHEELA 2.0
TH BUTTON BOARD

SIZE	CODE	DOC. NUMBER	REV
A3	CS	1310A2128301	A01

SHEET 59 OF 59