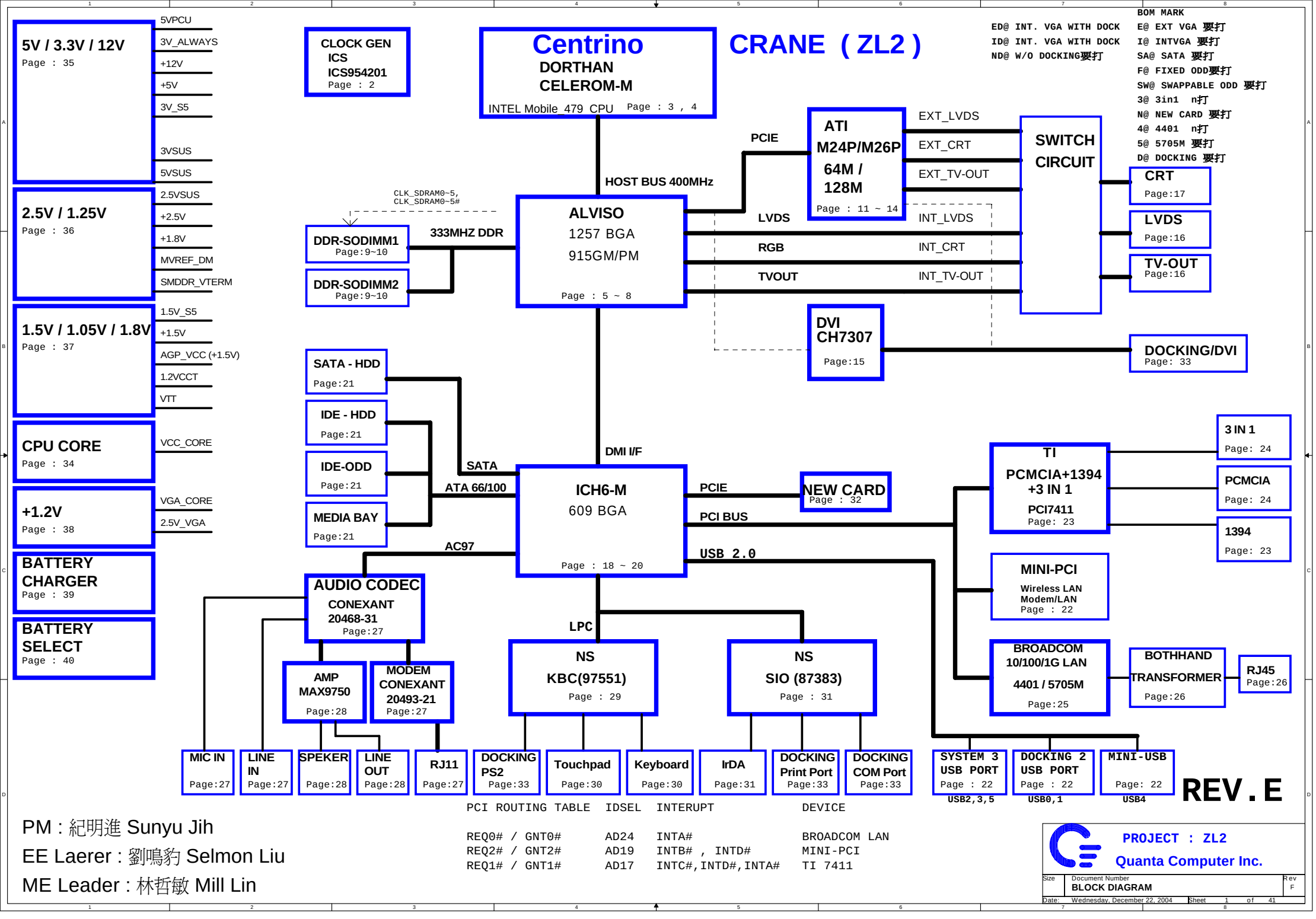
CRANE (ZL2)
BOM MARK
ED@ INT. VGA WITH DOCK
ID@ INT. VGA WITH DOCK
ND@ W/O DOCKING要打
E@ EXT VGA 要打
I@ INTVGA 要打
SA@ SATA 要打
F@ FIXED ODD要打
SW@ SWAPPABLE ODD 要打
3@ 3in1 n打
N@ NEW CARD 要打
4@ 4401 n打
5@ 5705M 要打
D@ DOCKING 要打
5V / 3.3V / 12V
Page : 35
5VPCU
3V_ALWAYS
+12V
+5V
3V_S5
3VSUS
5VSUS
2.5V / 1.25V
Page : 36
2.5VSUS
+2.5V
+1.8V
MVREF_DM
SMDDR_VTERM
1.5V / 1.05V / 1.8V
Page : 37
1.5V_S5
+1.5V
AGP_VCC (+1.5V)
1.2VCCT
VTT
CPU CORE
Page : 34
VCC_CORE
+1.2V
Page : 38
VGA_CORE
2.5V_VGA
BATTERY CHARGER
Page : 39
BATTERY SELECT
Page : 40
CLOCK GEN
ICS
ICS954201
Page : 2
Centrino
DORTHAN
CELEROM-M
INTEL Mobile 479 CPU
Page : 3 , 4
HOST BUS 400MHz
PCIE
ATI
M24P/M26P
64M / 128M
Page : 11 ~ 14
EXT_LVDS
EXT_CRT
EXT_TV-OUT
INT_LVDS
INT_CRT
INT_TV-OUT
SWITCH CIRCUIT
CRT
Page:17
LVDS
Page:16
TV-OUT
Page:16
CLK_SDRAM0~5,
CLK_SDRAM0~5#
DDR-SODIMM1
Page:9~10
DDR-SODIMM2
Page:9~10
333MHZ DDR
ALVISO
1257 BGA
915GM/PM
Page : 5 ~ 8
LVDS
RGB
TVOUT
DVI
CH7307
Page:15
DOCKING/DVI
Page: 33
SATA - HDD
Page:21
IDE - HDD
Page:21
IDE-ODD
Page:21
MEDIA BAY
Page:21
SATA
ATA 66/100
DMI I/F
ICH6-M
609 BGA
Page : 18 ~ 20
PCIE
NEW CARD
Page : 32
PCI BUS
USB 2.0
TI
PCMCIA+1394
+3 IN 1
PCI7411
Page: 23
3 IN 1
Page: 24
PCMCIA
Page: 24
1394
Page: 23
MINI-PCI
Wireless LAN
Modem/LAN
Page : 22
BROADCOM
10/100/1G LAN
4401 / 5705M
Page:25
BOTHHAND
TRANSFORMER
Page:26
RJ45
Page:26
AC97
AUDIO CODEC
CONEXANT
20468-31
Page:27
AMP
MAX9750
Page:28
MODEM
CONEXANT
20493-21
Page:27
LPC
NS
KBC(97551)
Page : 29
NS
SIO (87383)
Page : 31
MIC IN
Page:27
LINE IN
Page:27
SPEKER
Page:28
LINE OUT
Page:28
RJ11
Page:27
DOCKING PS2
Page:33
Touchpad
Page:30
Keyboard
Page:30
IrDA
Page:31
DOCKING Print Port
Page:33
DOCKING COM Port
Page:33
SYSTEM 3 USB PORT
Page : 22
USB2,3,5
DOCKING 2 USB PORT
Page : 22
USB0,1
MINI-USB
Page: 22
USB4
REV . E
PCI ROUTING TABLE IDSEL INTERUPT DEVICE
REQ0# / GNT0# AD24 INTA# BROADCOM LAN
REQ2# / GNT2# AD19 INTB# , INTD# MINI-PCI
REQ1# / GNT1# AD17 INTC#,INTD#,INTA# TI 7411
PM : 紀明進 Sunyu Jih
EE Laerer : 劉鳴豹 Selmon Liu
ME Leader : 林哲敏 Mill Lin
PROJECT : ZL2
Quanta Computer Inc.
Size
Document Number
BLOCK DIAGRAM
Rev
F
Date: Wednesday, December 22, 2004
Sheet 1 of 41

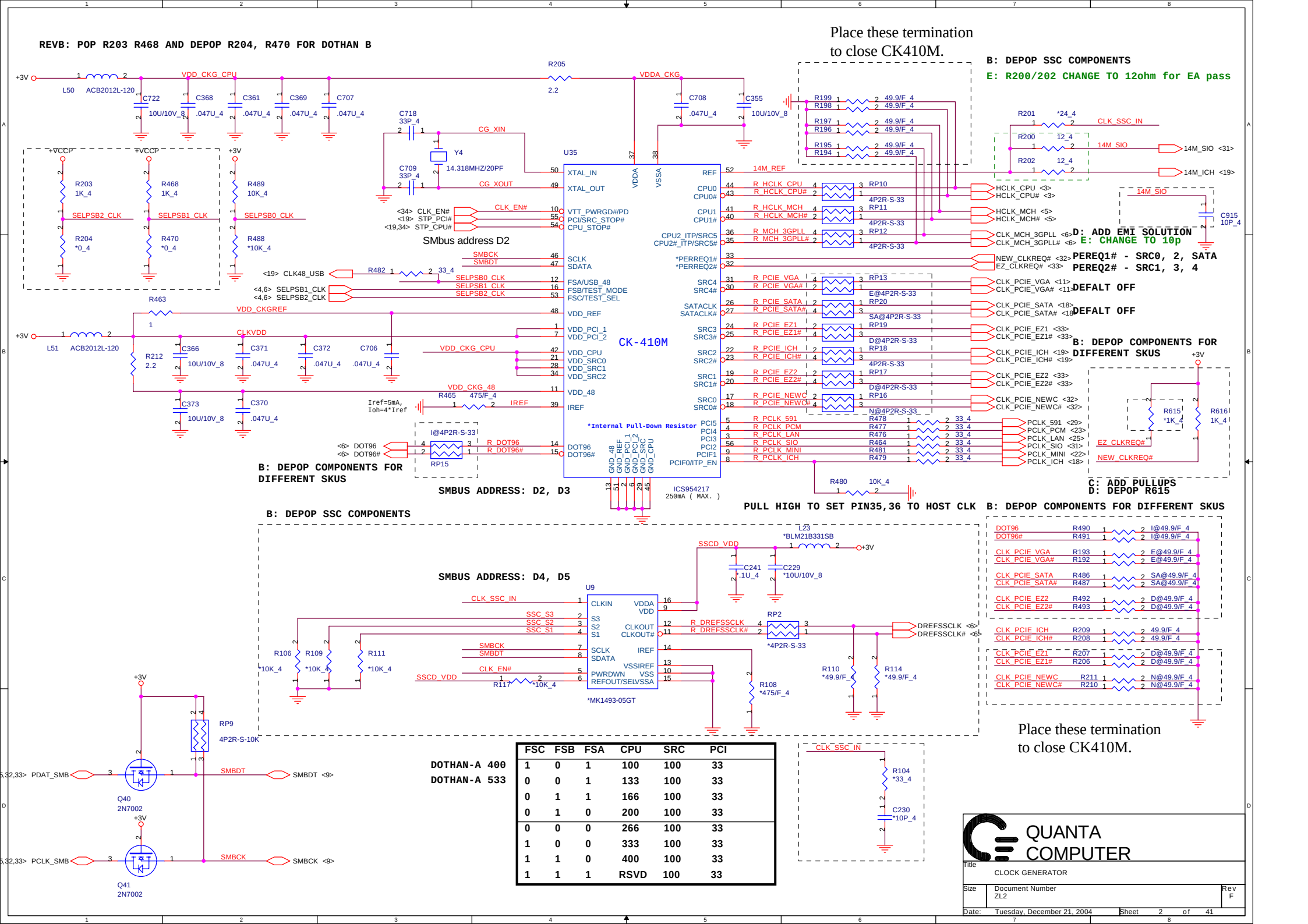

FSC	FSB	FSA	CPU	SRC	PCI
1	0	1	100	100	33
0	0	1	133	100	33
0	1	1	166	100	33
0	1	0	200	100	33
0	0	0	266	100	33
1	0	0	333	100	33
1	1	0	400	100	33
1	1	1	RSVD	100	33

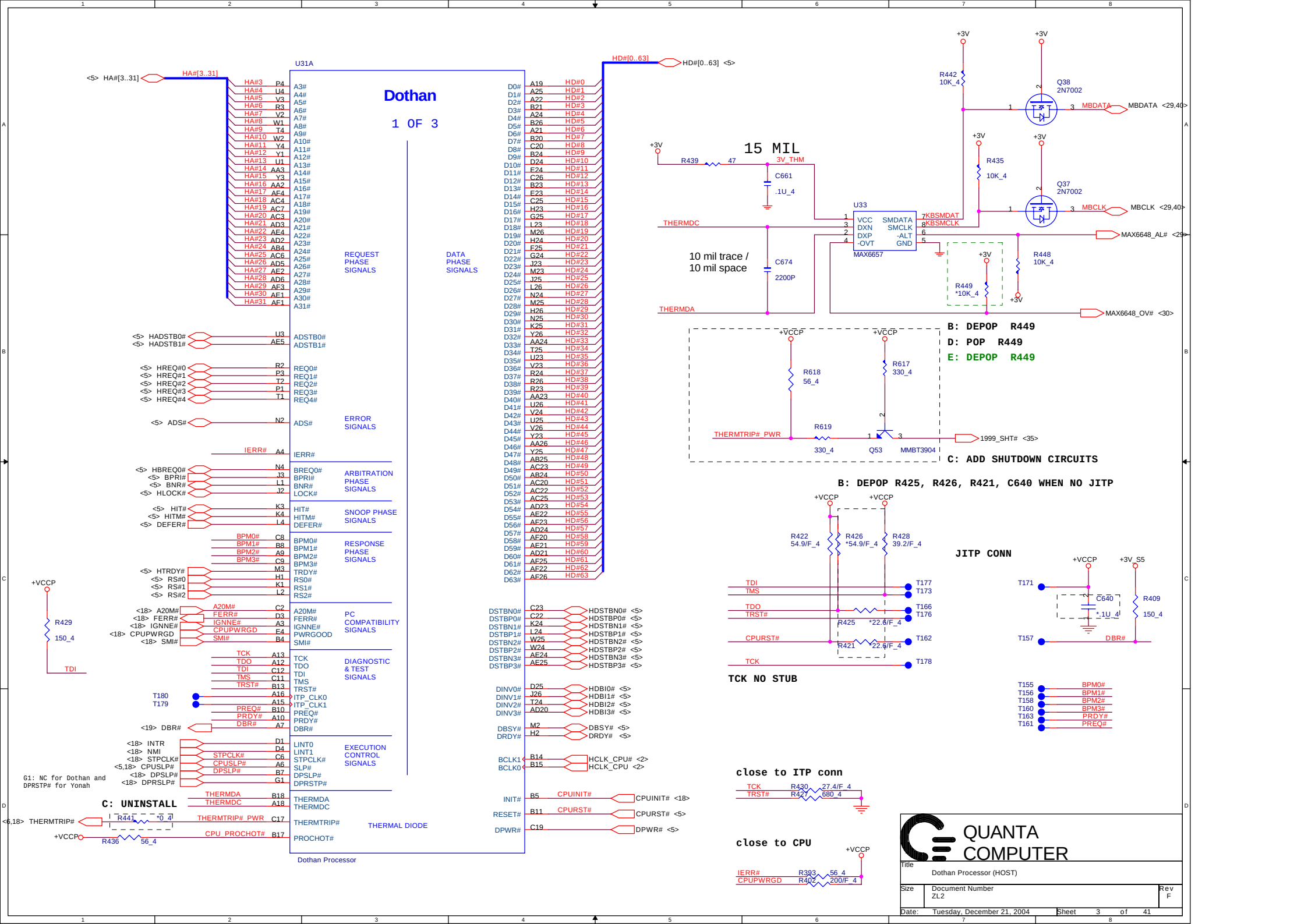
U31A
Dothan
1 OF 3
REQUEST PHASE SIGNALS
DATA PHASE SIGNALS
ERROR SIGNALS
ARBITRATION PHASE SIGNALS
SNOOP PHASE SIGNALS
RESPONSE PHASE SIGNALS
PC COMPATIBILITY SIGNALS
DIAGNOSTIC & TEST SIGNALS
EXECUTION CONTROL SIGNALS
THERMAL DIODE
Dothan Processor
HA#[3..31]
HD#[0..63]
HADSTB0#
HADSTB1#
HREQ#0
HREQ#1
HREQ#2
HREQ#3
HREQ#4
ADS#
IERR#
HBREQ0#
BPRI#
BNR#
HLOCK#
HIT#
HITM#
DEFER#
BPM0#
BPM1#
BPM2#
BPM3#
HTRDY#
RS#0
RS#1
RS#2
A20M#
FERR#
IGNNE#
CPUPWRGD
SMI#
TCK
TDO
TDI
TMS
TRST#
T180
T179
PREQ#
PRDY#
DBR#
INTR
NMI
STPCLK#
CPUSLP#
DPSLP#
THERMDA
THERMDC
THERMTRIP#
THERMTRIP#_PWR
CPU_PROCHOT#
HDSTBN0#
HDSTBP0#
HDSTBN1#
HDSTBP1#
HDSTBN2#
HDSTBP2#
HDSTBN3#
HDSTBP3#
DINV0#
DINV1#
DINV2#
DINV3#
DBSY#
DRDY#
BCLK1
BCLK0
HCLK_CPU#
HCLK_CPU
INIT#
RESET#
DPWR#
CPUINIT#
CPURST#
DPWR#
+VCCP
R429
150_4
TDI
G1: NC for Dothan and DPRSTP# for Yonah
C: UNINSTALL
R441
*0_4
R436
56_4
15 MIL
3V_THM
R439
47
C661
.1U_4
THERMDC
THERMDA
10 mil trace /
10 mil space
C674
2200P
U33
VCC
DXN
DXP
-OVT
SMDATA
SMCLK
-ALT
GND
MAX6657
KBSMDAT
KBSMCLK
R442
10K_4
R435
10K_4
R448
10K_4
R449
*10K_4
Q38
2N7002
Q37
2N7002
MBDATA
MBCLK
MAX6648_AL#
MAX6648_OV#
B: DEPOP R449
D: POP R449
E: DEPOP R449
R618
56_4
R617
330_4
R619
330_4
Q53
MMBT3904
THERMTRIP#_PWR
1999_SHT#
C: ADD SHUTDOWN CIRCUITS
B: DEPOP R425, R426, R421, C640 WHEN NO JITP
R422
54.9/F_4
R426
*54.9/F_4
R428
39.2/F_4
R425
*22.6/F_4
R421
*22.6/F_4
TCK NO STUB
JITP CONN
+3V_S5
C640
*.1U_4
R409
150_4
DBR#
close to ITP conn
R430
27.4/F_4
R427
680_4
close to CPU
R393
56_4
R402
200/F_4
QUANTA COMPUTER
Title
Dothan Processor (HOST)
Size
Document Number
ZL2
Rev
F
Date: Tuesday, December 21, 2004
Sheet 3 of 41

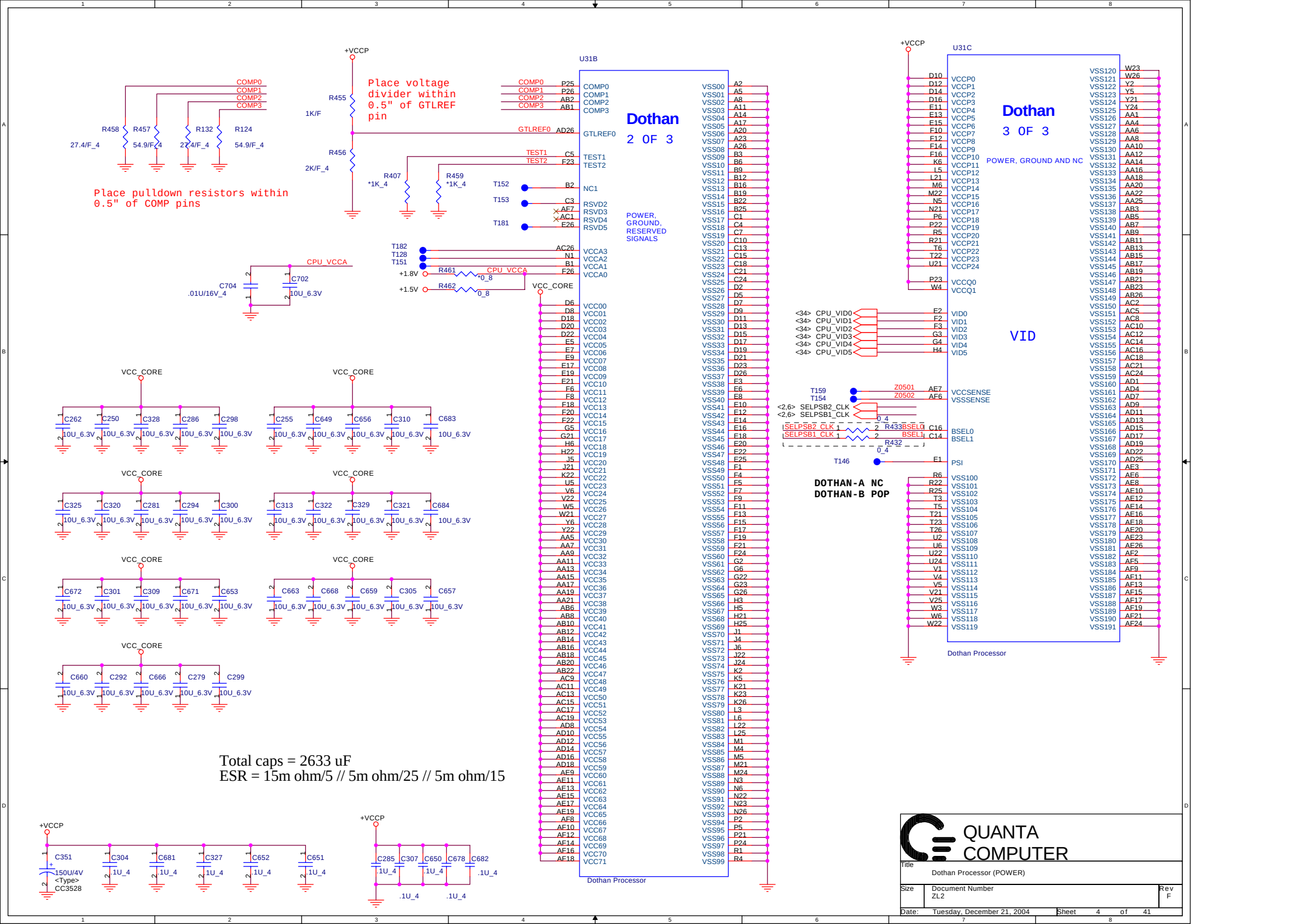
U31B
Dothan
2 OF 3
POWER, GROUND, RESERVED SIGNALS
Dothan Processor
U31C
Dothan
3 OF 3
POWER, GROUND AND NC
VID
Dothan Processor
Place voltage divider within 0.5" of GTLREF pin
Place pulldown resistors within 0.5" of COMP pins
+VCCP
R455
1K/F
R456
2K/F_4
R458
27.4/F_4
R457
54.9/F_4
R132
27.4/F_4
R124
54.9/F_4
R407
*1K_4
R459
*1K_4
GTLREF0
TEST1
TEST2
NC1
RSVD2
RSVD3
RSVD4
RSVD5
VCCA3
VCCA2
VCCA1
VCCA0
CPU_VCCA
C704
.01U/16V_4
C702
10U_6.3V
R461
*0_8
R462
0_8
+1.8V
+1.5V
VCC_CORE
VID0
VID1
VID2
VID3
VID4
VID5
VCCSENSE
VSSSENSE
BSEL0
BSEL1
PSI
R433
R432
DOTHAN-A NC
DOTHAN-B POP
Total caps = 2633 uF
ESR = 15m ohm/5 // 5m ohm/25 // 5m ohm/15
C351
150U/4V
<Type>
CC3528
C304
.1U_4
C681
.1U_4
C327
.1U_4
C652
.1U_4
C651
.1U_4
C285
.1U_4
C307
.1U_4
C650
.1U_4
C678
.1U_4
C682
.1U_4
QUANTA COMPUTER
Title
Dothan Processor (POWER)
Size
Document Number
ZL2
Rev
F
Date: Tuesday, December 21, 2004
Sheet 4 of 41

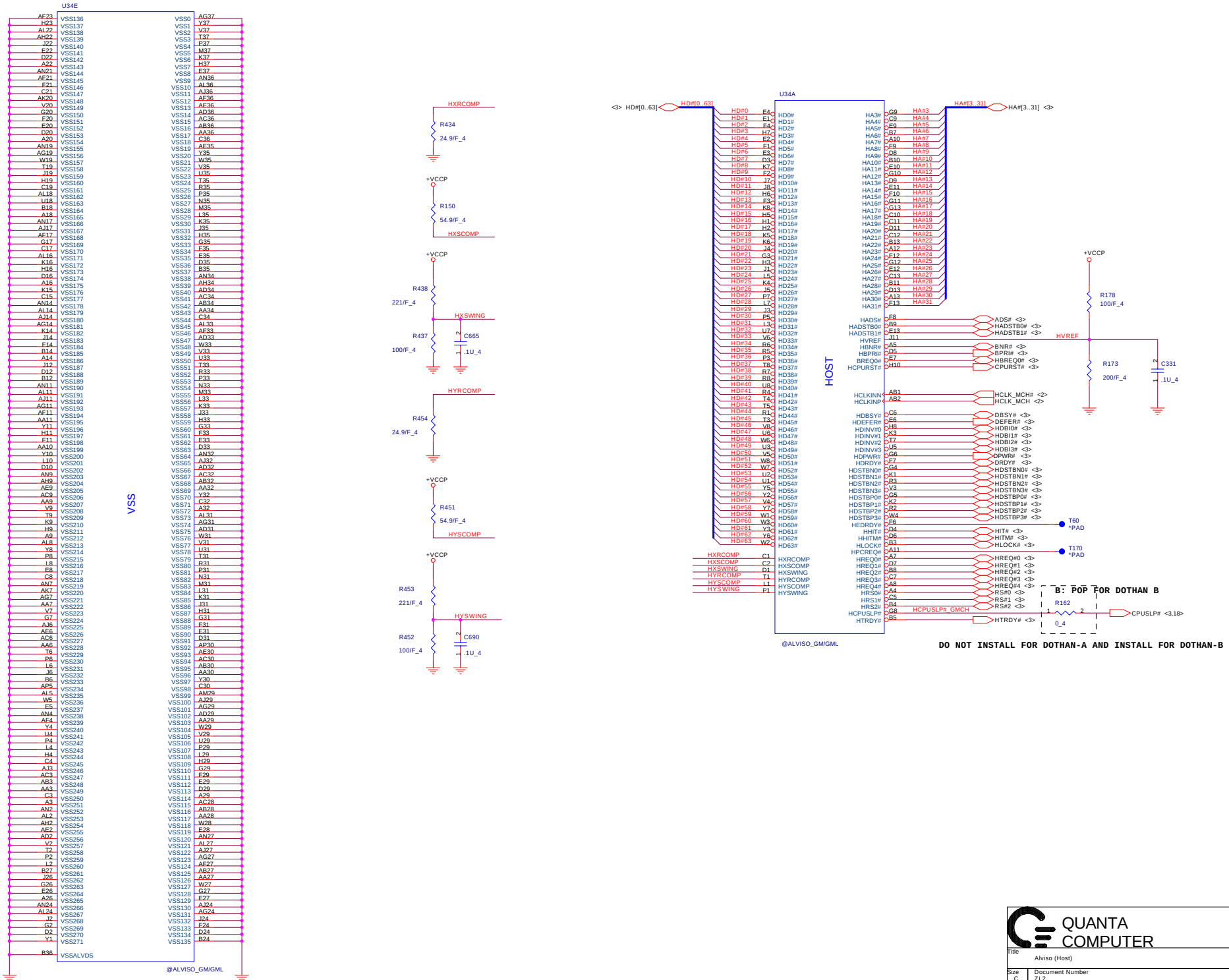

QUANTA COMPUTER

Title	Alviso (Host)	
Size C	Document Number ZL2	Rev F
Date: Tuesday, December 21, 2004	Sheet 5 of 41	

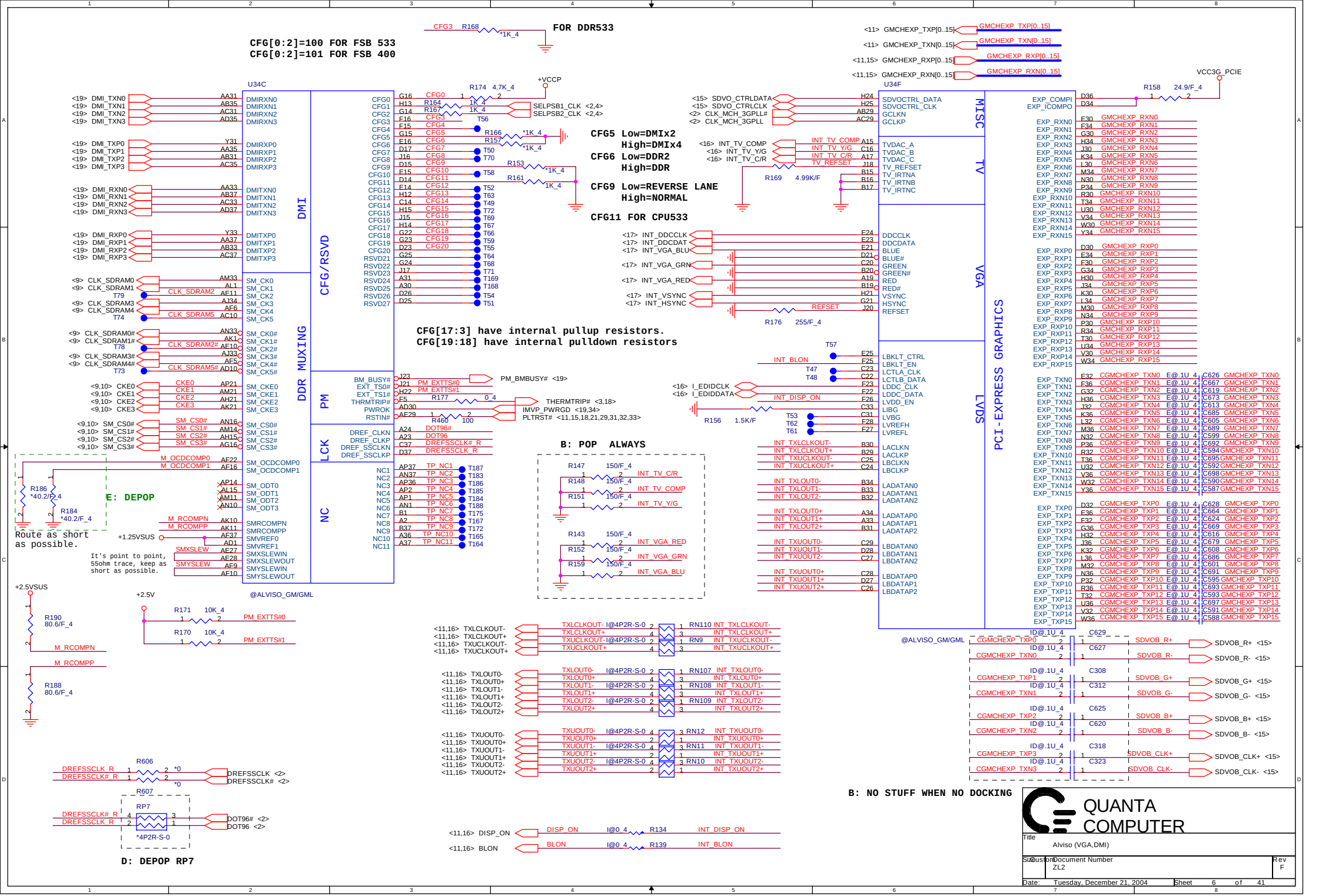
CFG[0:2]=100 FOR FSB 533
CFG[0:2]=101 FOR FSB 400
FOR DDR533
U34C
DMI
DDR MUXING
CFG/RSVD
PM
LCK
NC
CFG5 Low=DMIx2
High=DMIx4
CFG6 Low=DDR2
High=DDR
CFG9 Low=REVERSE LANE
High=NORMAL
CFG11 FOR CPU533
CFG[17:3] have internal pullup resistors.
CFG[19:18] have internal pulldown resistors
B: POP ALWAYS
E: DEPOP
Route as short as possible.
It's point to point, 55ohm trace, keep as short as possible.
@ALVISO_GM/GML
D: DEPOP RP7
U34F
MISC
TV
VGA
LVDS
PCI-EXPRESS GRAPHICS
B: NO STUFF WHEN NO DOCKING
QUANTA COMPUTER
Title
Alviso (VGA,DMI)
Size
Document Number
ZL2
Rev
F
Date: Tuesday, December 21, 2004
Sheet 6 of 41

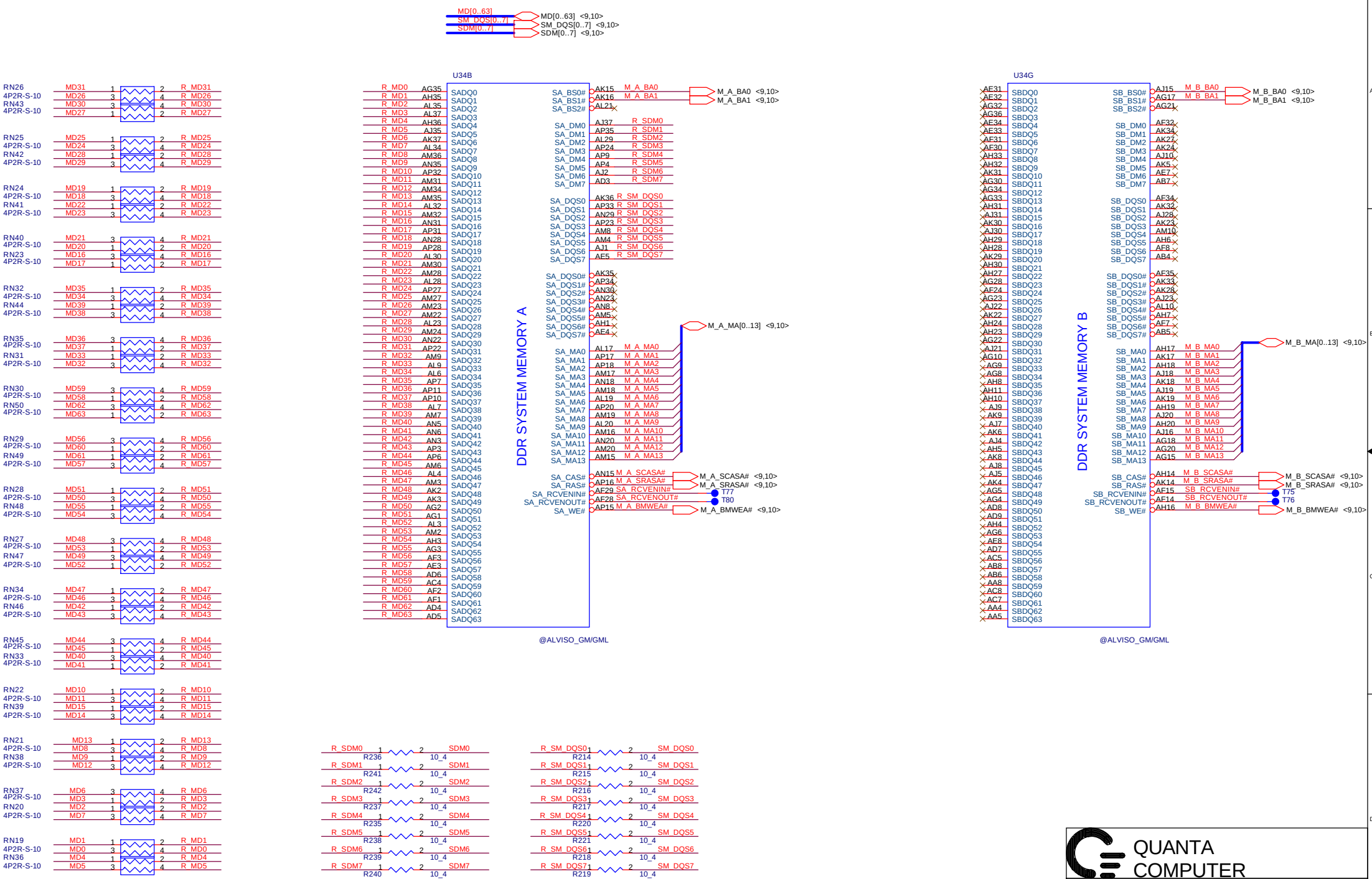
MD[0..63]
SM_DQS[0..7]
SDM[0..7]
MD[0..63] <9,10>
SM_DQS[0..7] <9,10>
SDM[0..7] <9,10>
U34B
DDR SYSTEM MEMORY A
@ALVISO_GM/GML
U34G
DDR SYSTEM MEMORY B
@ALVISO_GM/GML
M_A_BA0 <9,10>
M_A_BA1 <9,10>
M_A_MA[0..13] <9,10>
M_A_SCASA# <9,10>
M_A_SRASA# <9,10>
M_A_BMWEA# <9,10>
M_B_BA0 <9,10>
M_B_BA1 <9,10>
M_B_MA[0..13] <9,10>
M_B_SCASA# <9,10>
M_B_SRASA# <9,10>
M_B_BMWEA# <9,10>
T77
T80
T75
T76
RN26 4P2R-S-10
RN43 4P2R-S-10
RN25 4P2R-S-10
RN42 4P2R-S-10
RN24 4P2R-S-10
RN41 4P2R-S-10
RN40 4P2R-S-10
RN23 4P2R-S-10
RN32 4P2R-S-10
RN44 4P2R-S-10
RN35 4P2R-S-10
RN31 4P2R-S-10
RN30 4P2R-S-10
RN50 4P2R-S-10
RN29 4P2R-S-10
RN49 4P2R-S-10
RN28 4P2R-S-10
RN48 4P2R-S-10
RN27 4P2R-S-10
RN47 4P2R-S-10
RN34 4P2R-S-10
RN46 4P2R-S-10
RN45 4P2R-S-10
RN33 4P2R-S-10
RN22 4P2R-S-10
RN39 4P2R-S-10
RN21 4P2R-S-10
RN38 4P2R-S-10
RN37 4P2R-S-10
RN20 4P2R-S-10
RN19 4P2R-S-10
RN36 4P2R-S-10
R236 10_4
R241 10_4
R242 10_4
R237 10_4
R235 10_4
R238 10_4
R239 10_4
R240 10_4
R214 10_4
R215 10_4
R216 10_4
R217 10_4
R220 10_4
R221 10_4
R218 10_4
R219 10_4
QUANTA COMPUTER
Title
Alviso (DDR)
Size Custom
Document Number ZL2
Rev F
Date: Tuesday, December 21, 2004
Sheet 7 of 41

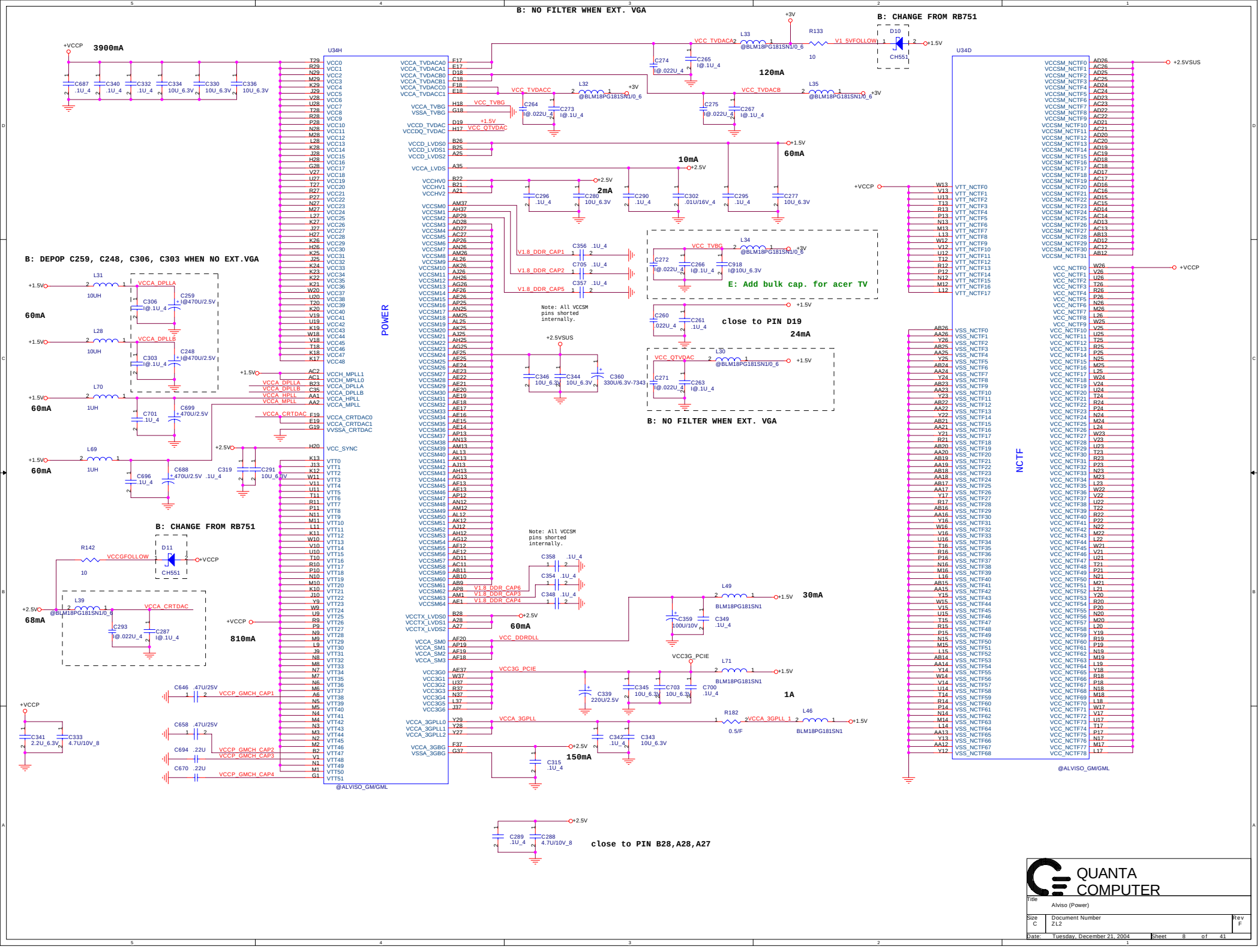
B: NO FILTER WHEN EXT. VGA
B: CHANGE FROM RB751
3900mA
U34H
POWER
@ALVISO_GM/GML
U34D
NCTF
@ALVISO_GM/GML
120mA
60mA
10mA
2mA
E: Add bulk cap. for acer TV
close to PIN D19
24mA
B: NO FILTER WHEN EXT. VGA
B: DEPOP C259, C248, C306, C303 WHEN NO EXT.VGA
60mA
60mA
60mA
B: CHANGE FROM RB751
68mA
810mA
60mA
30mA
1A
150mA
close to PIN B28,A28,A27
QUANTA COMPUTER
Title
Alviso (Power)
Size C
Document Number ZL2
Rev F
Date: Tuesday, December 21, 2004
Sheet 8 of 41

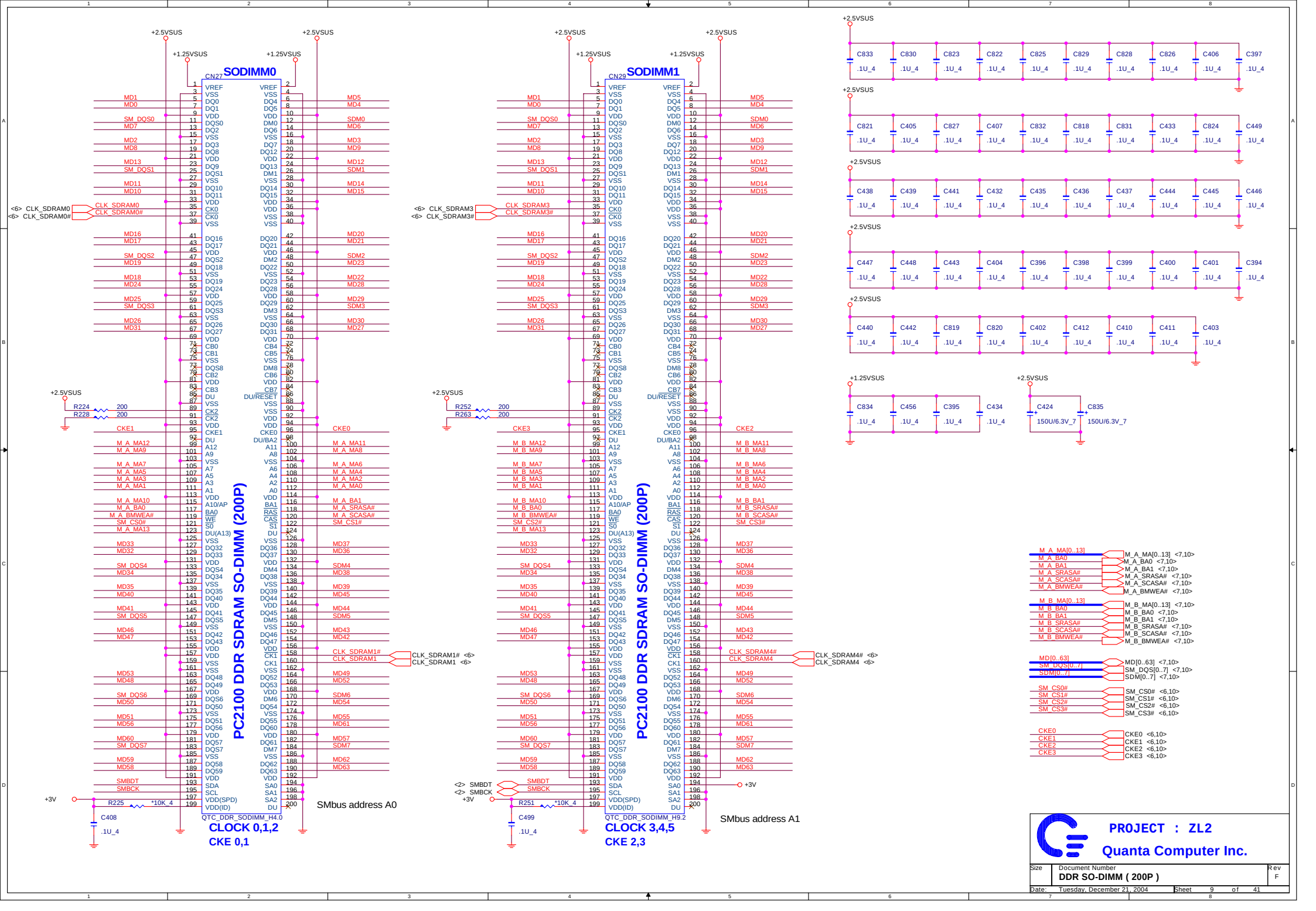
SODIMM0
CN27
PC2100 DDR SDRAM SO-DIMM (200P)
QTC_DDR_SODIMM_H4.0
CLOCK 0,1,2
CKE 0,1
SMbus address A0
SODIMM1
CN29
PC2100 DDR SDRAM SO-DIMM (200P)
QTC_DDR_SODIMM_H9.2
CLOCK 3,4,5
CKE 2,3
SMbus address A1
+2.5VSUS
+1.25VSUS
+3V
C833 C830 C823 C822 C825 C829 C828 C826 C406 C397
C821 C405 C827 C407 C832 C818 C831 C433 C824 C449
C438 C439 C441 C432 C435 C436 C437 C444 C445 C446
C447 C448 C443 C404 C396 C398 C399 C400 C401 C394
C440 C442 C819 C820 C402 C412 C410 C411 C403
C834 C456 C395 C434
C424 150U/6.3V_7
C835 150U/6.3V_7
.1U_4
M_A_MA[0..13]
M_B_MA[0..13]
MD[0..63]
SM_DQS[0..7]
SDM[0..7]
SM_CS0#
SM_CS1#
SM_CS2#
SM_CS3#
CKE0
CKE1
CKE2
CKE3
PROJECT : ZL2
Quanta Computer Inc.
Size
Document Number
DDR SO-DIMM (200P)
Rev
F
Date: Tuesday, December 21, 2004
Sheet 9 of 41

For terminal R-pack.

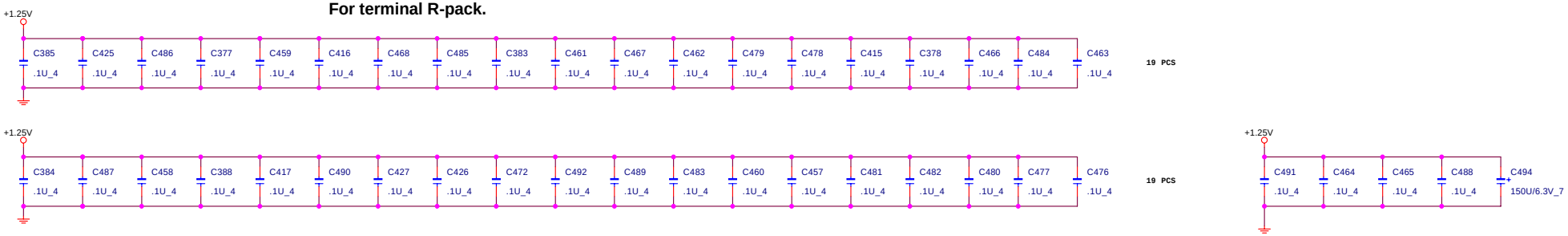

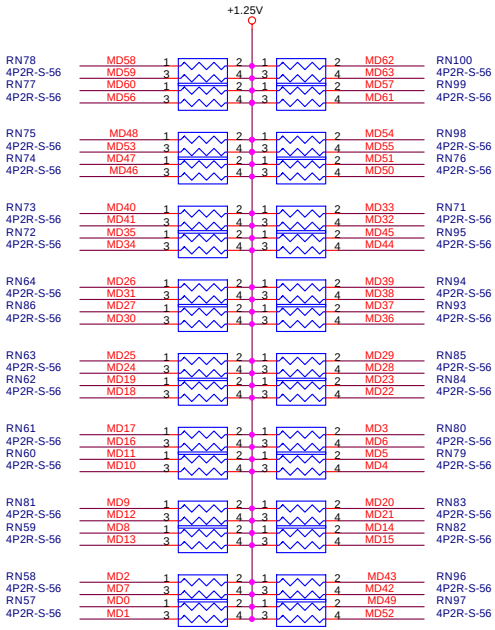

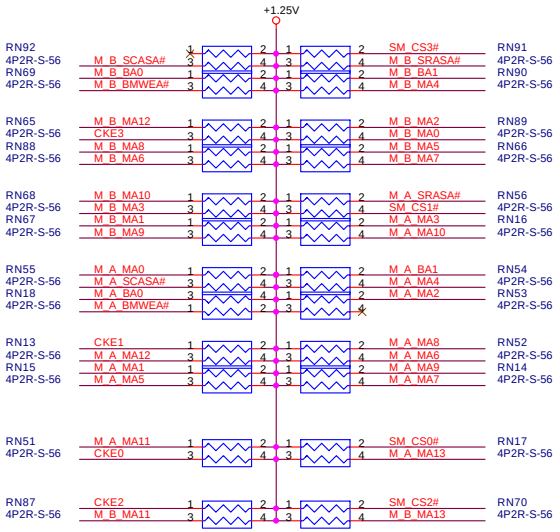

PROJECT : ZL2

Quanta Computer Inc.

Size	Document Number	Rev
	DDR TERMINATION	F

Date: Tuesday, December 21, 2004 Sheet 10 of 41

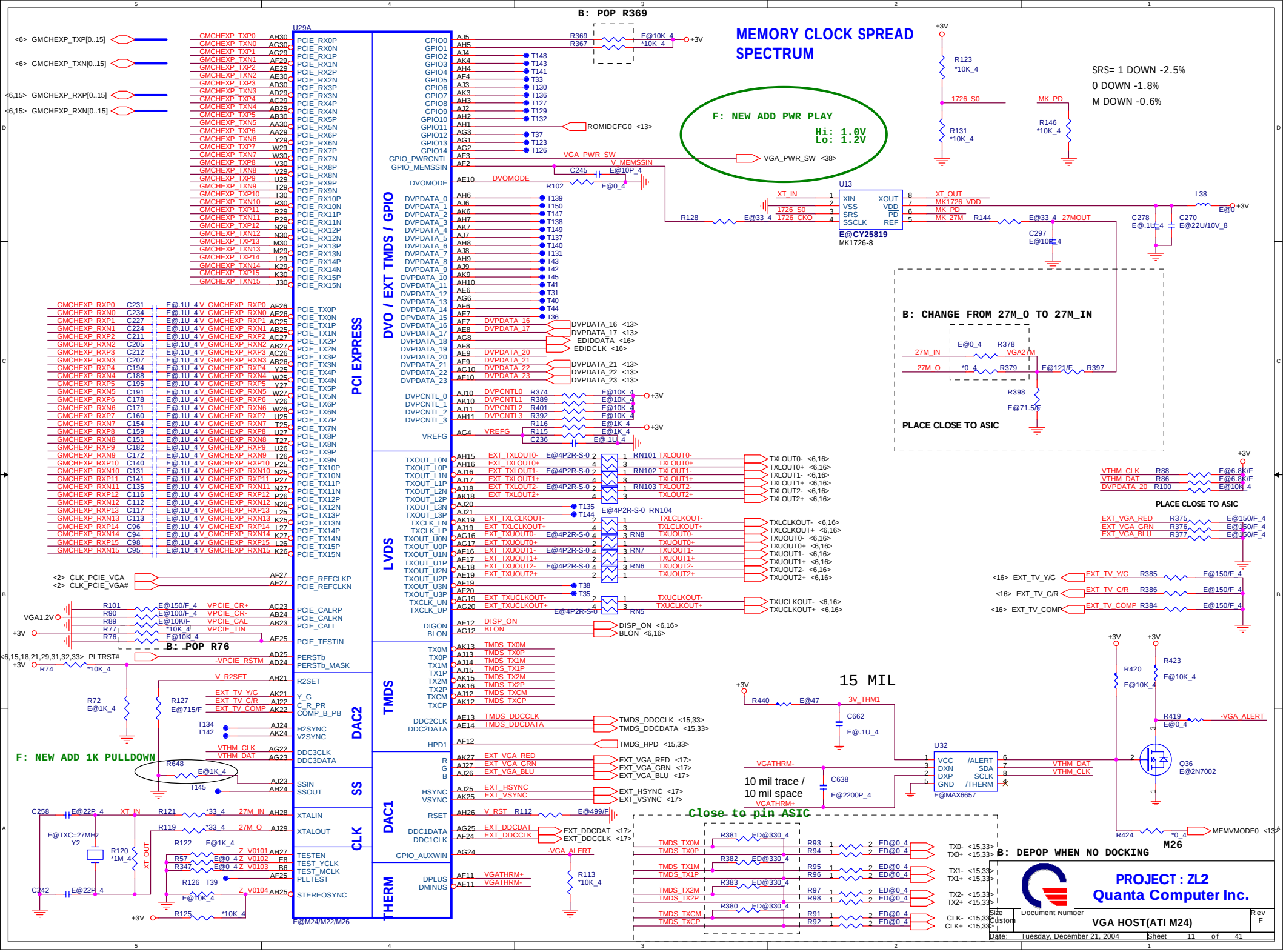
B: POP R369
MEMORY CLOCK SPREAD SPECTRUM
SRS= 1 DOWN -2.5%
0 DOWN -1.8%
M DOWN -0.6%
F: NEW ADD PWR PLAY
Hi: 1.0V
Lo: 1.2V
U29A
PCI EXPRESS
DVO / EXT TMDS / GPIO
LVDS
TMDS
DAC2
SS
CLK
DAC1
THERM
U13
E@CY25819
MK1726-8
B: CHANGE FROM 27M_O TO 27M_IN
PLACE CLOSE TO ASIC
B: POP R76
F: NEW ADD 1K PULLDOWN
15 MIL
10 mil trace /
10 mil space
Close to pin ASIC
U32
E@MAX6657
Q36
E@2N7002
M26
B: DEPOP WHEN NO DOCKING
E@M24/M22/M26
PROJECT : ZL2
Quanta Computer Inc.
VGA HOST(ATI M24)
Size Custom
Document Number
Rev F
Date: Tuesday, December 21, 2004
Sheet 11 of 41

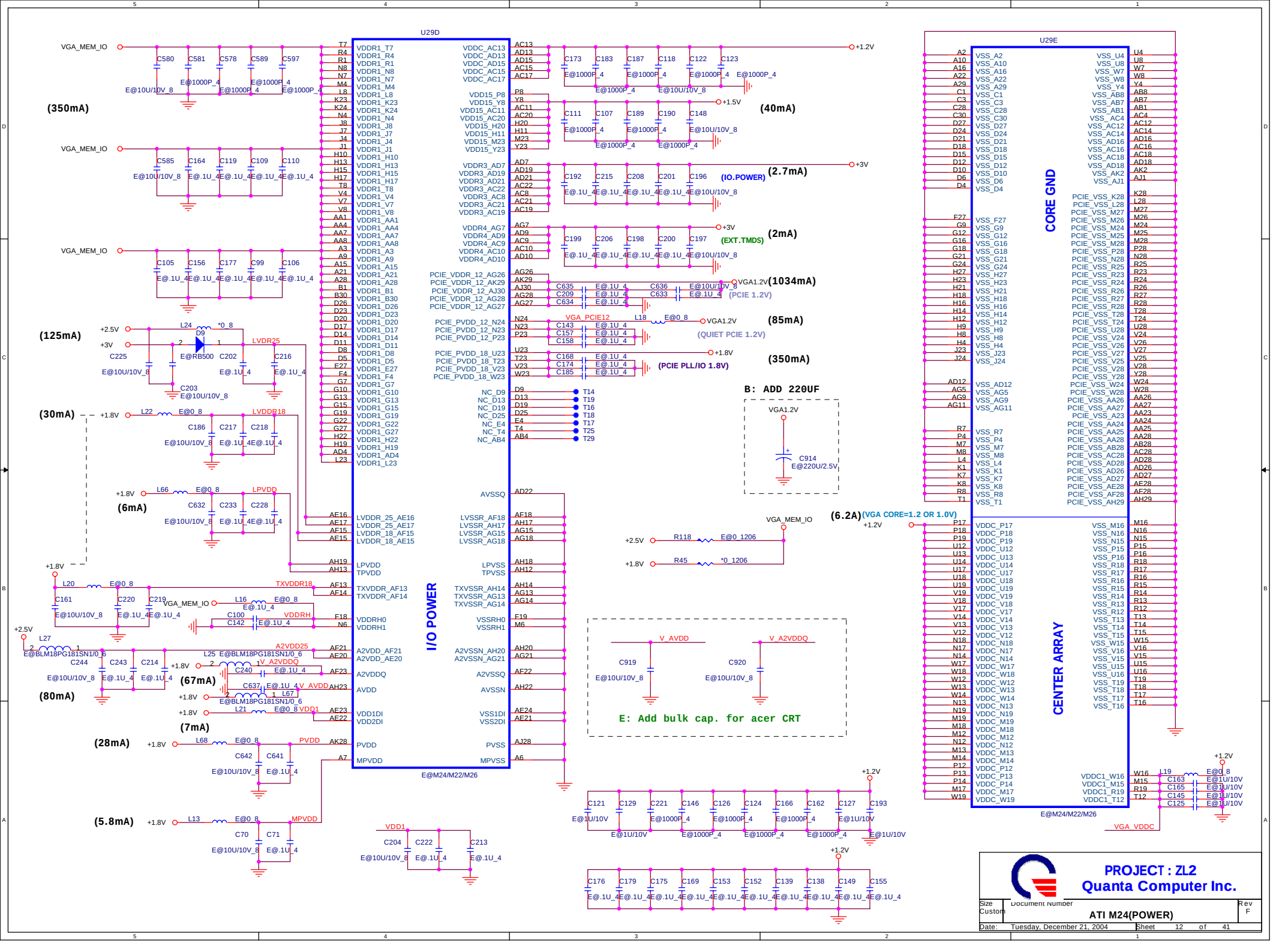
U29D
I/O POWER
E@M24/M22/M26
U29E
CORE GND
CENTER ARRAY
E@M24/M22/M26
(350mA)
(125mA)
(30mA)
(6mA)
(80mA)
(67mA)
(7mA)
(28mA)
(5.8mA)
(40mA)
(2.7mA)
(IO.POWER)
(2mA)
(EXT.TMDS)
(1034mA)
(PCIE 1.2V)
(85mA)
(QUIET PCIE 1.2V)
(350mA)
(PCIE PLL/IO 1.8V)
B: ADD 220UF
(6.2A)
(VGA CORE=1.2 OR 1.0V)
E: Add bulk cap. for acer CRT
PROJECT : ZL2
Quanta Computer Inc.
Size
Custom
Document Number
ATI M24(POWER)
Rev
F
Date: Tuesday, December 21, 2004
Sheet 12 of 41

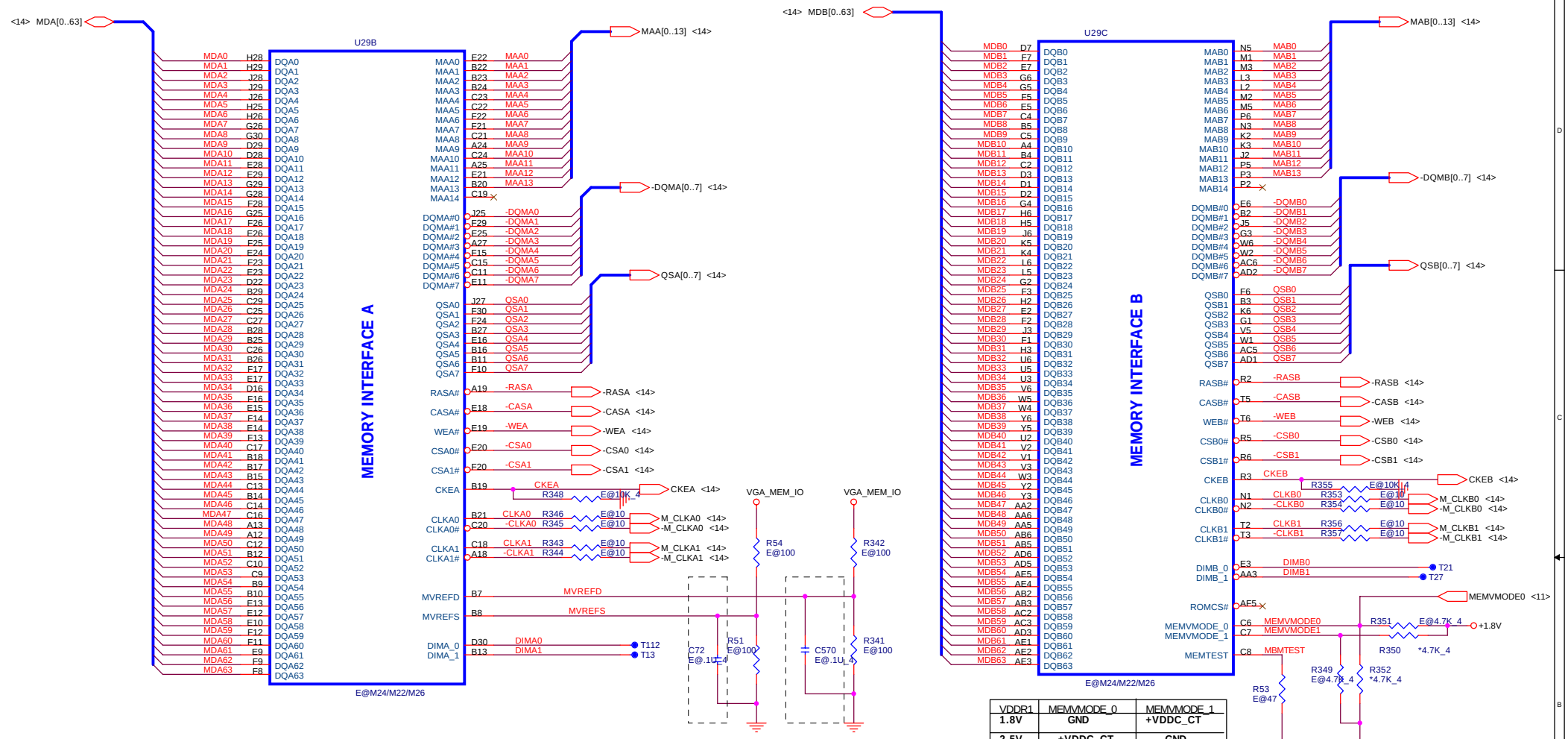

VDDR1	MEMVMODE_0	MEMVMODE_1
1.8V	GND	+VDDC_CT
2.5V	+VDDC_CT	GND

STRAPS PIN

GPIO_0	PCI-Express Current Calibration Bandgap Backup **0: use reference voltage from Bandgap** 1: use reference voltage from resistor divider
GPIO_1	PCI-Express PLL Calibration force enable **0: Disable PLL force calibration** 1: Enable PLL force calibration
GPIO_(3,2)	**00: PCI Express 1.0 mode** 01: RESERVED 10: PCI Express 1.0 mode 11: RESERVED
GPIO_4	Turn off PCI-Express impedance / strength calibration **0: enable** 1: disable
GPIO_5	Bypass PCI-Express PLL

GPIO_6	PCI-Express transmitter current compensation **0: Normal** 1: Inject extra current for output buffer switching
GPIO_8	Strap to set the debug muxes to bting out DEBUG signals even if registers are inaccessible
GPIO(9,13:11) INT P/D	ROMIDCFG **0x0x: No ROM, CHG_ID=0** 0x1x: No Rom, CHG_ID=1 1000: Parallel ROM, Chip ID'S from ROM 1000: Parallel ROM, Chip ID'S from ROM
DVPDATA_21~23 MEM TYPE	DVPDATA_21: 0=4Mx32 1=8Mx32 DVPDATA_22: 0=128M 1=64M DVPDATA_23: 0=Hynix 1=Samsung

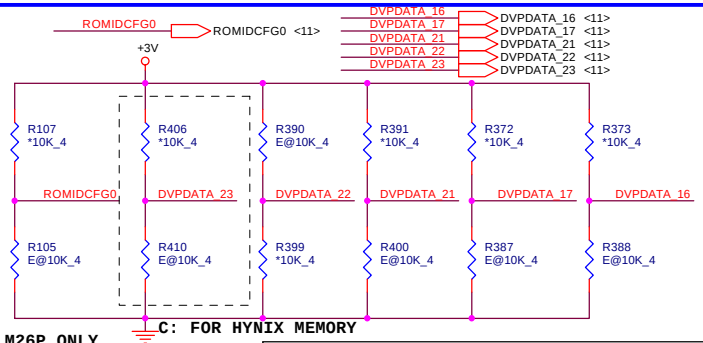

FOR M26P ONLY
0: 128M
1: 256M

C: FOR HYNIX MEMORY

PROJECT :ZL2
Quanta Computer Inc.

Size	Document Number	Rev
Custom	ATI M24 MEM/STRAPS PIN	F

Date: Tuesday, December 21, 2004 Sheet 13 of 41

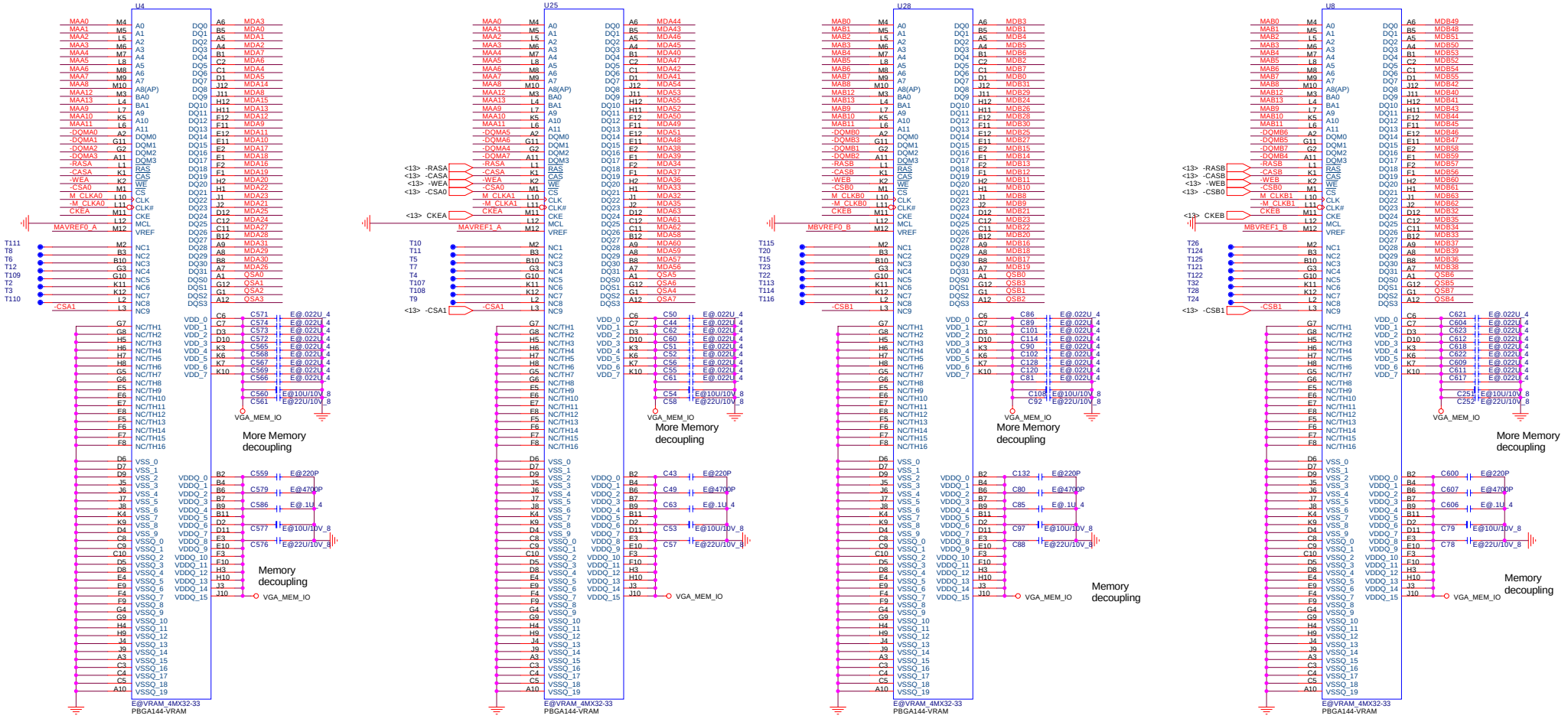

VGA DDR MEMORY A

@64/128MBytes DDR 128Mbit 1MX32X4 uBGA

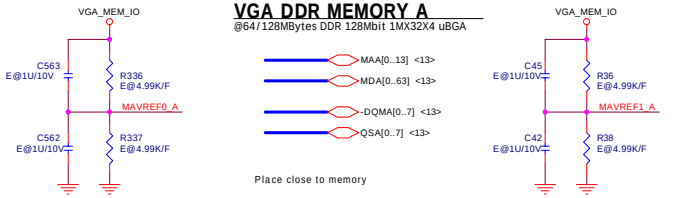

8Mx32 AKD56WCT503 K4D55323QF-GC33 1.8V

4Mx32 AKD35W-T506 K4D263238E-GC33 2.5V

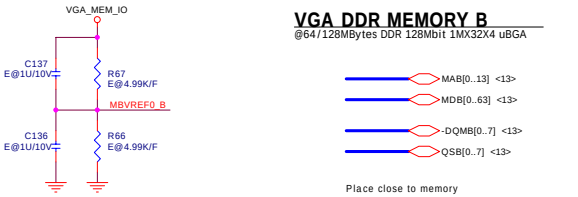

VGA DDR MEMORY B

@64/128MBytes DDR 128Mbit 1MX32X4 uBGA

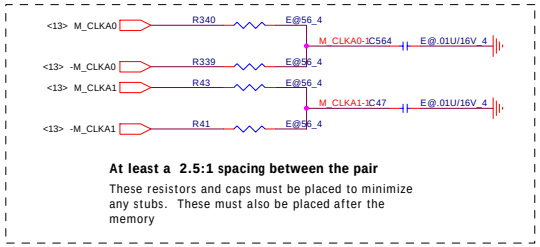

At least a 2.5:1 spacing between the pair

These resistors and caps must be placed to minimize any stubs. These must also be placed after the memory

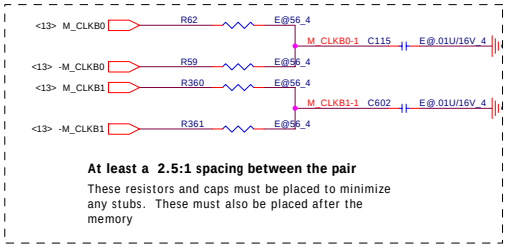

At least a 2.5:1 spacing between the pair

These resistors and caps must be placed to minimize any stubs. These must also be placed after the memory

PROJECT : ZL2

Quanta Computer Inc.

Size	Document Number	Rev
C	VGA DDR VRAM-A CANNEL	F

Date: Tuesday, December 21, 2004 Sheet 14 of 41

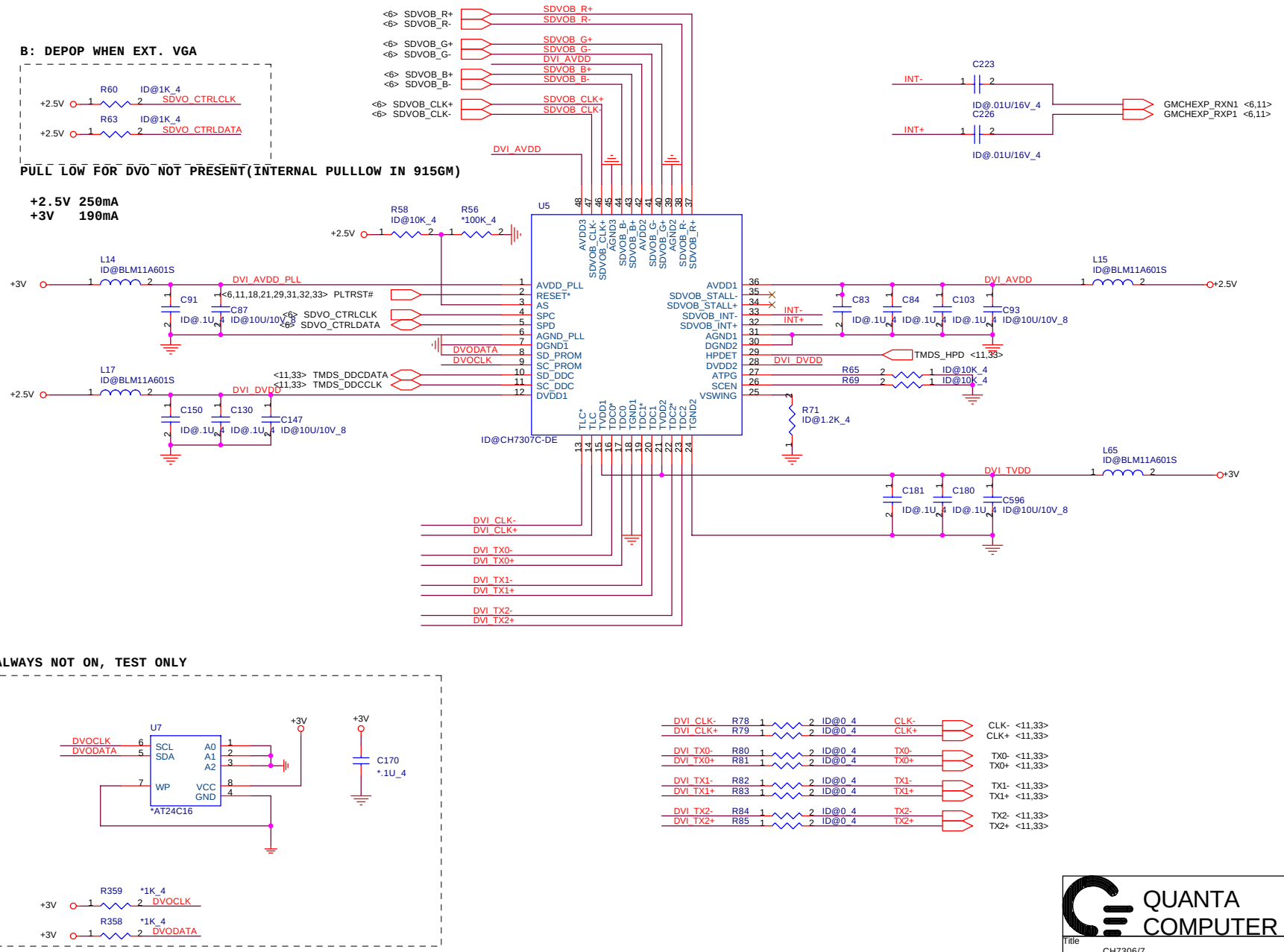

QUANTA COMPUTER

Title: CH7306/7

Size: Custom | Document Number: ZL2 | Rev: F

Date: Tuesday, December 21, 2004 | Sheet 15 of 41

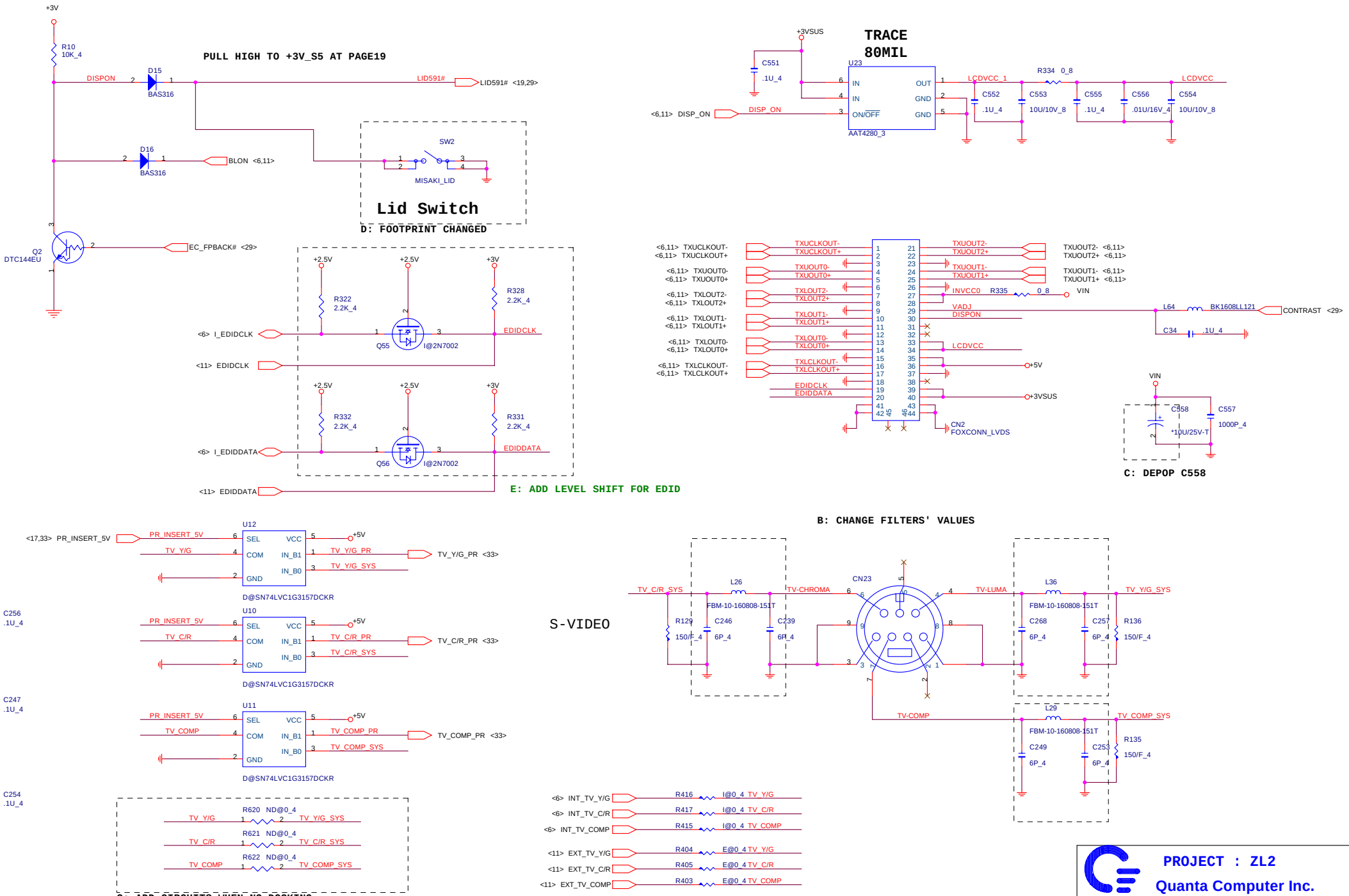

PROJECT : ZL2

Quanta Computer Inc.

Size	Document Number	Rev
	DVO CH7011A & RJ45-11 CON	F

Date: Tuesday, December 21, 2004 Sheet 16 of 41

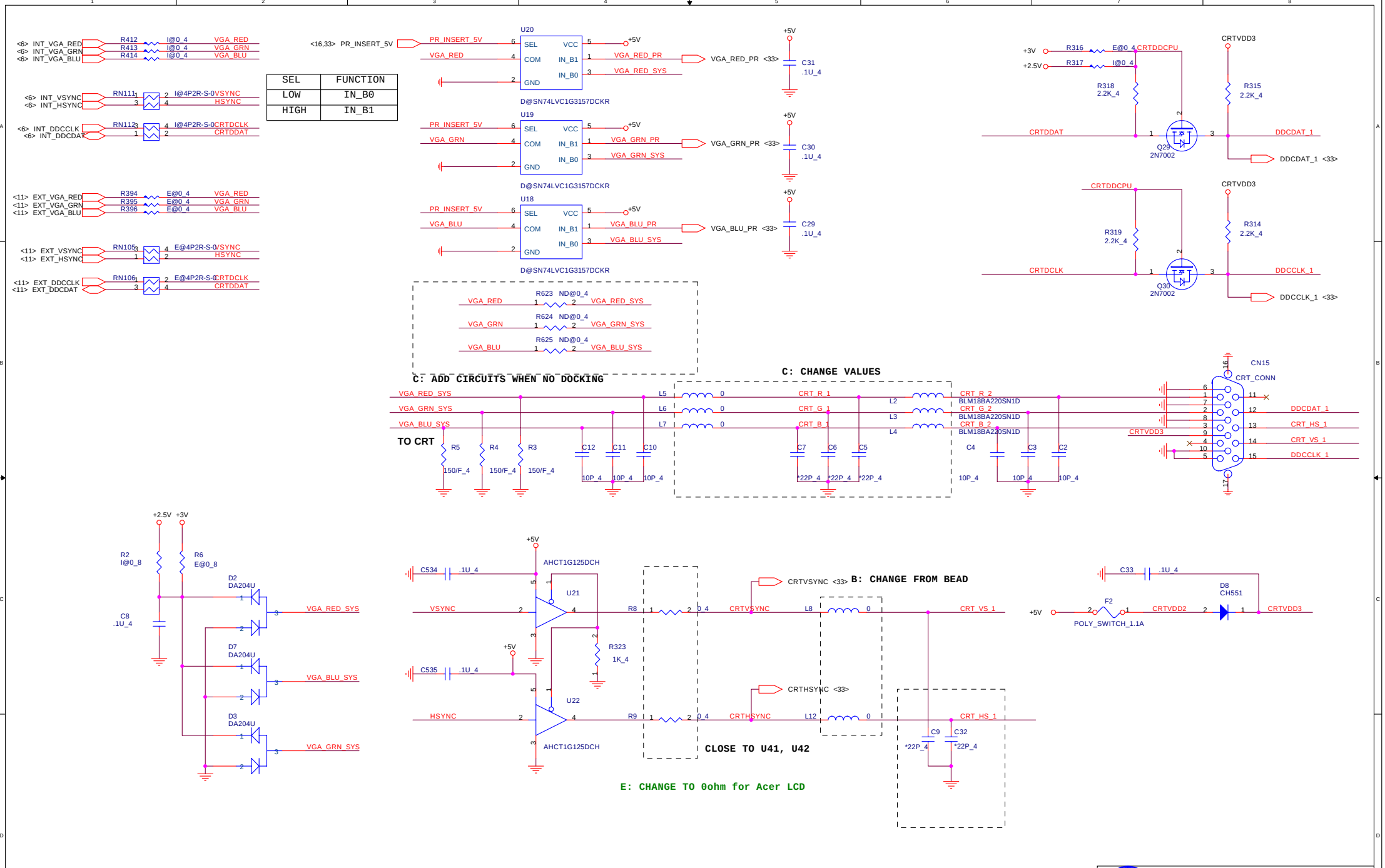

PROJECT : ZL2	
Quanta Computer Inc.	
Size	Document Number: CRT & S-VIDEO
Rev	F
Date: Tuesday, December 21, 2004	Sheet 17 of 41

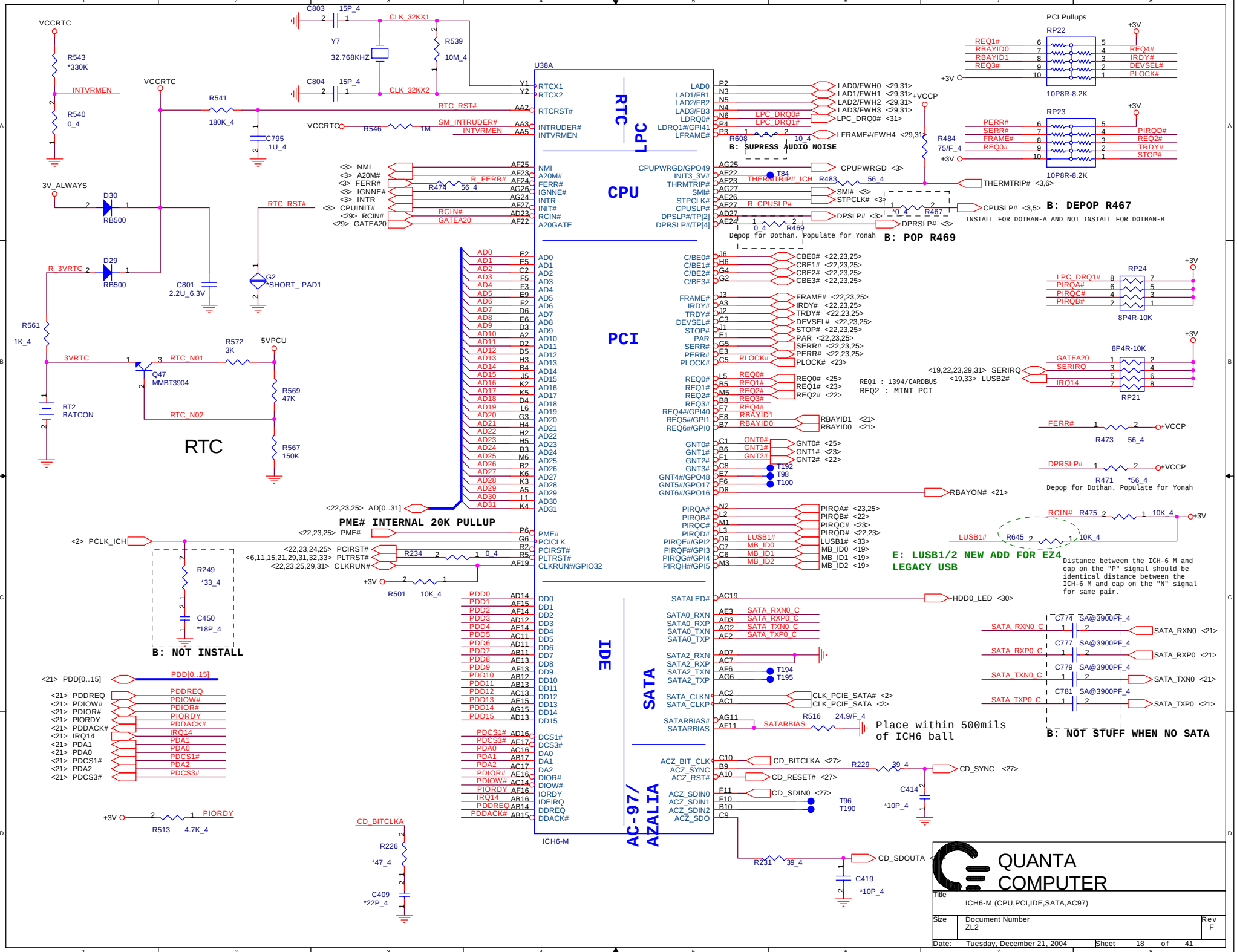
U38A
RTC
LPC
CPU
PCI
IDE
SATA
AC-97/ AZALIA
ICH6-M
RTC
PCI Pullups
RP22
10P8R-8.2K
RP23
10P8R-8.2K
RP24
8P4R-10K
RP21
8P4R-10K
B: SUPRESS AUDIO NOISE
B: DEPOP R467
INSTALL FOR DOTHAN-A AND NOT INSTALL FOR DOTHAN-B
B: POP R469
Depop for Dothan. Populate for Yonah
PME# INTERNAL 20K PULLUP
B: NOT INSTALL
REQ1 : 1394/CARDBUS
REQ2 : MINI PCI
E: LUSB1/2 NEW ADD FOR EZ4
LEGACY USB
Distance between the ICH-6 M and cap on the "P" signal should be identical distance between the ICH-6 M and cap on the "N" signal for same pair.
Place within 500mils of ICH6 ball
B: NOT STUFF WHEN NO SATA
QUANTA COMPUTER
Title
ICH6-M (CPU,PCI,IDE,SATA,AC97)
Size
Document Number
ZL2
Rev
F
Date: Tuesday, December 21, 2004
Sheet 18 of 41

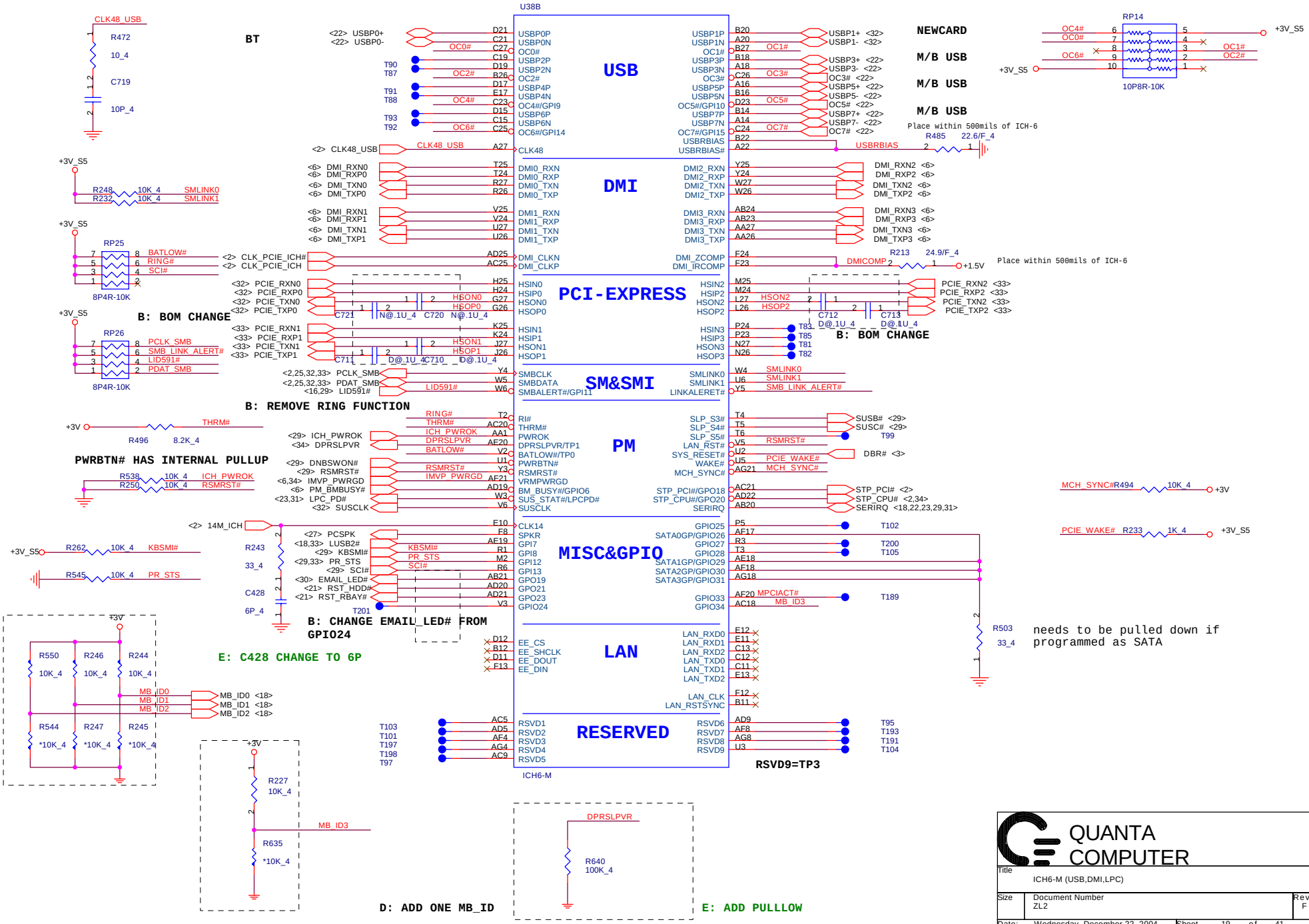
U38B
USB
DMI
PCI-EXPRESS
SM&SMI
PM
MISC&GPIO
LAN
RESERVED
ICH6-M
BT
NEWCARD
M/B USB
M/B USB
M/B USB
Place within 500mils of ICH-6
B: BOM CHANGE
B: REMOVE RING FUNCTION
PWRBTN# HAS INTERNAL PULLUP
B: CHANGE EMAIL_LED# FROM GPIO24
E: C428 CHANGE TO 6P
needs to be pulled down if programmed as SATA
RSVD9=TP3
D: ADD ONE MB_ID
E: ADD PULLLOW
QUANTA COMPUTER
Title
ICH6-M (USB,DMI,LPC)
Size
Document Number
ZL2
Rev
F
Date: Wednesday, December 22, 2004
Sheet 19 of 41

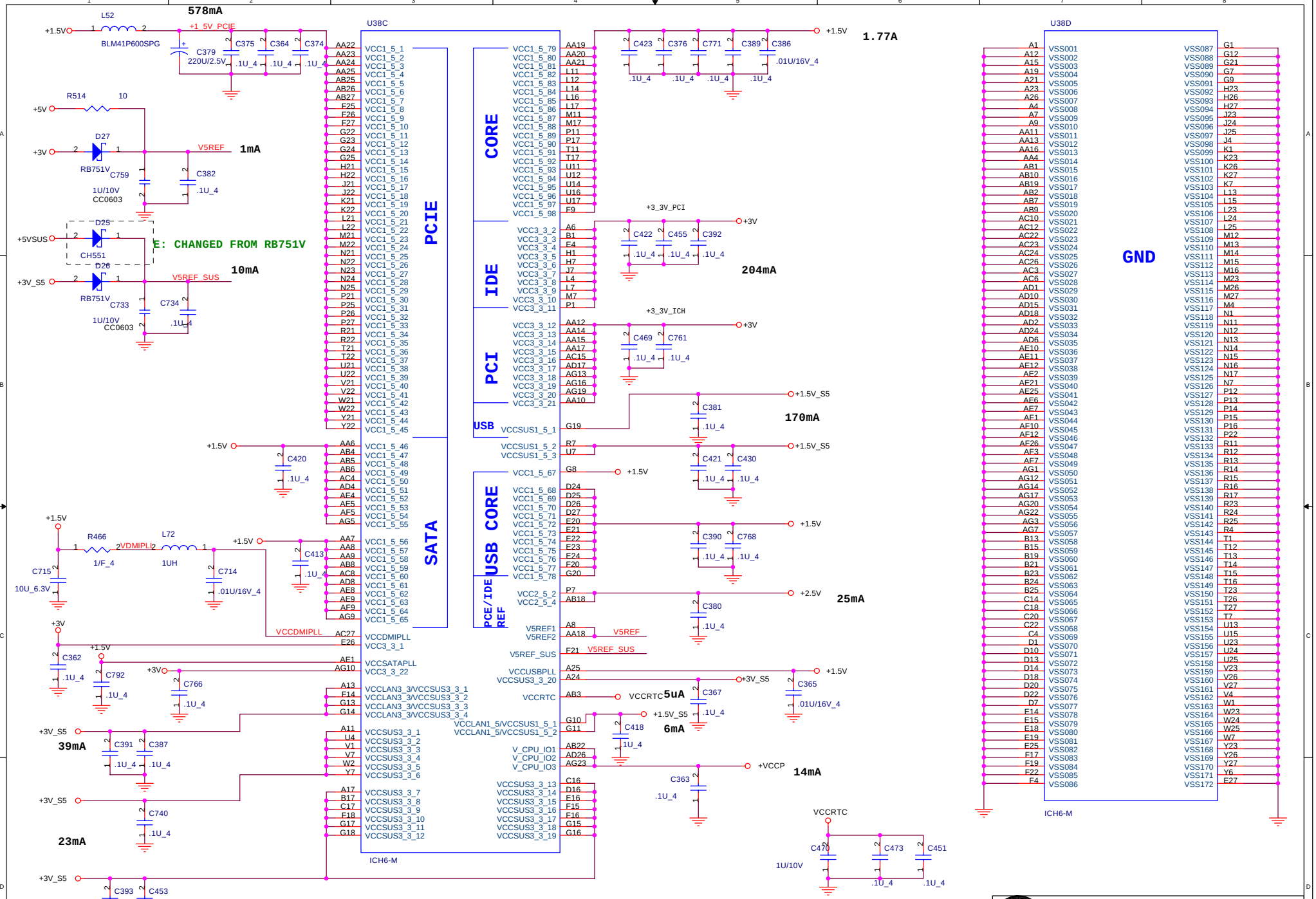

QUANTA COMPUTER

Title	ICH6-M (POWER&GND)
Size	Document Number ZL2
Rev	F
Date:	Tuesday, December 21, 2004
Sheet	20 of 41

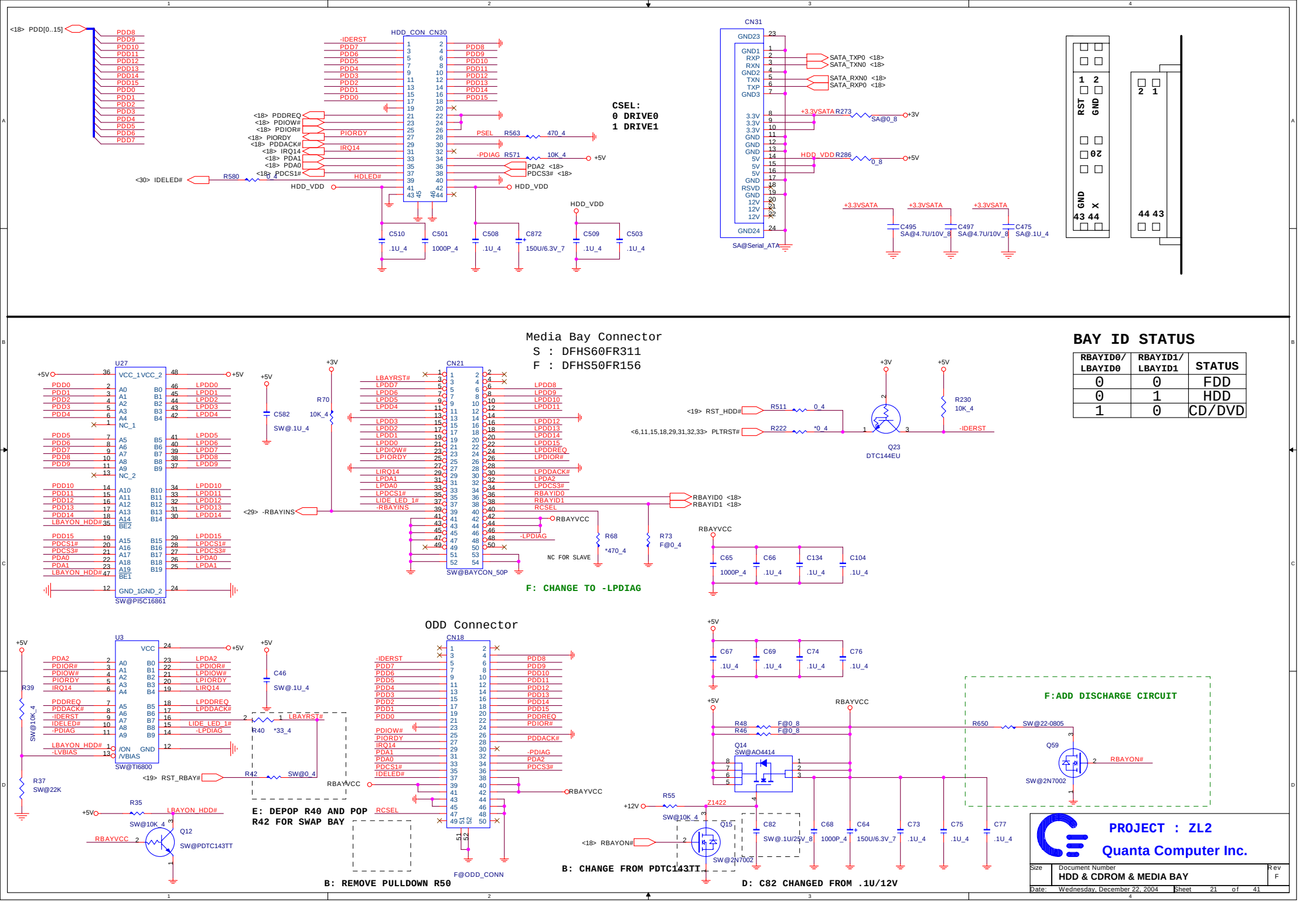

BAY ID STATUS

RBAYID0/ LBAYID0	RBAYID1/ LBAYID1	STATUS
0	0	FDD
0	1	HDD
1	0	CD/DVD

ID Select : AD20
Interrupt Pin : INTB# , INTC#
Request Indicate : REQ1#
Grant Indicate : GNT1#

MINI-PCI

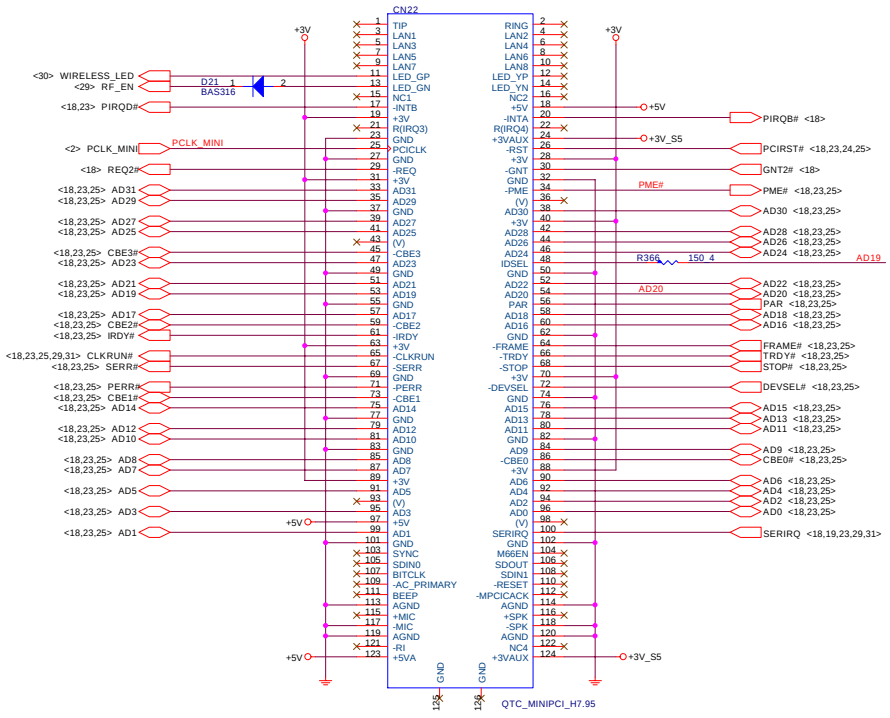

PCLK_MINI R408 *22_4 C645 *10P_4

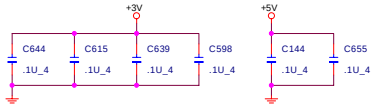

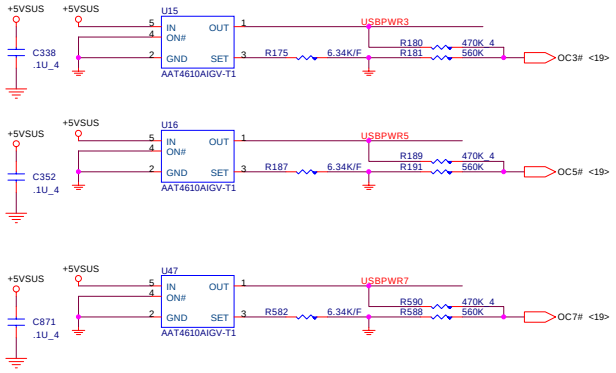

F: CHANGE TO 100UF

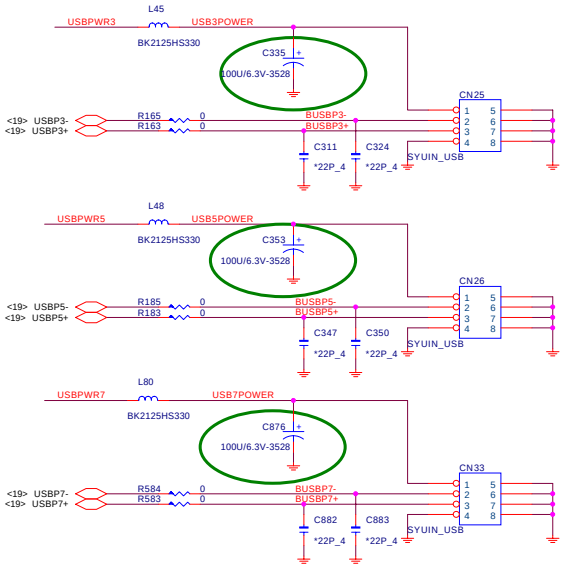

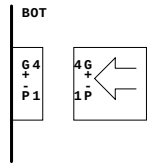

B: REMOVE CHOKE PADS

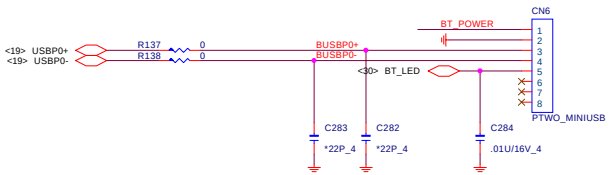

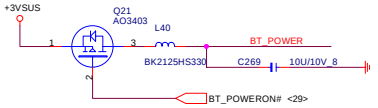

PROJECT : ZL2
Quanta Computer Inc.

Size	Document Number	Rev
	MINI PCI,USB	F

Date: Tuesday, December 21, 2004 Sheet 22 of 41

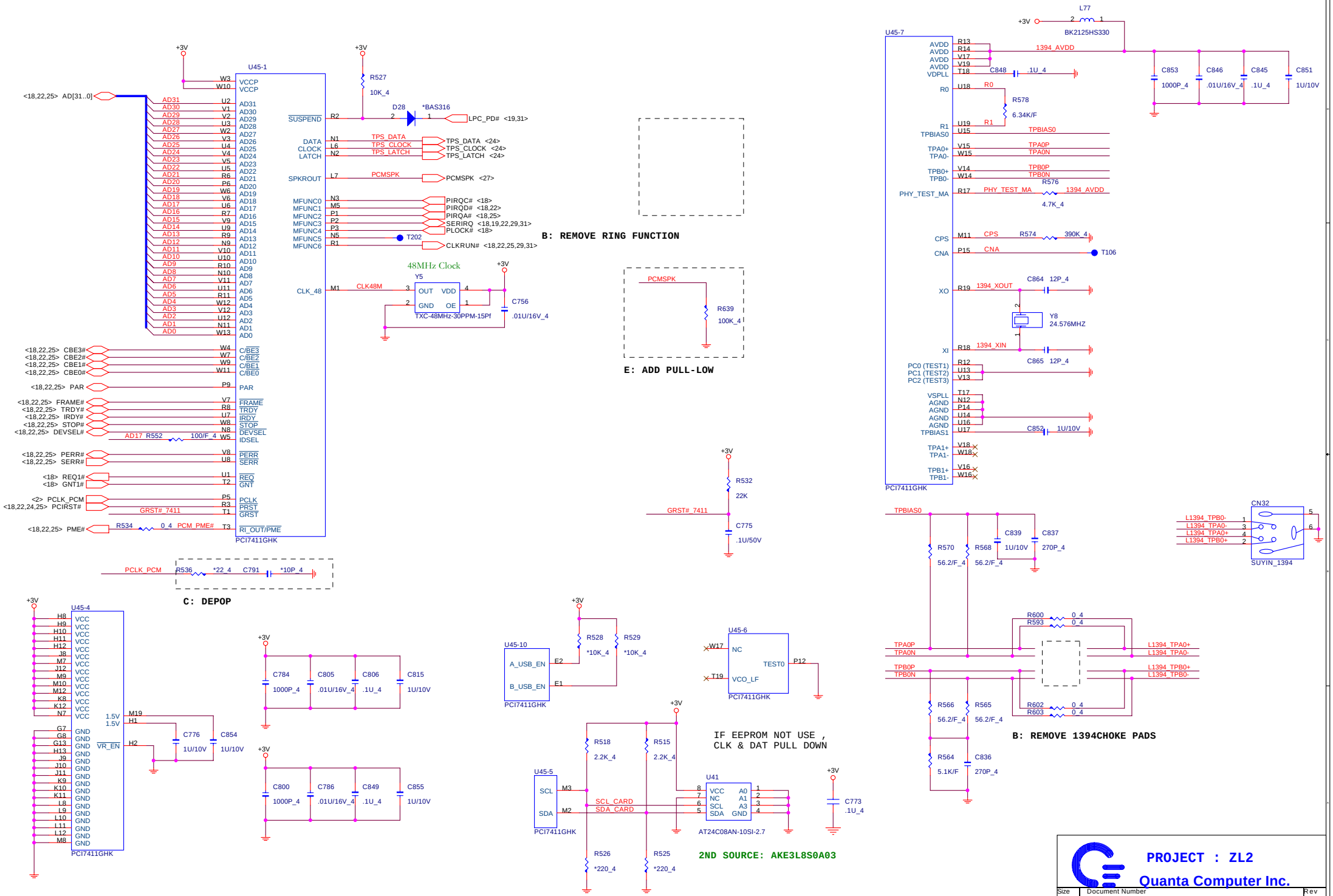

PROJECT : ZL2

Quanta Computer Inc.

Size	Document Number	Rev
	PCMCIA CONTROLLER	F

Date: Tuesday, December 21, 2004 Sheet 23 of 41

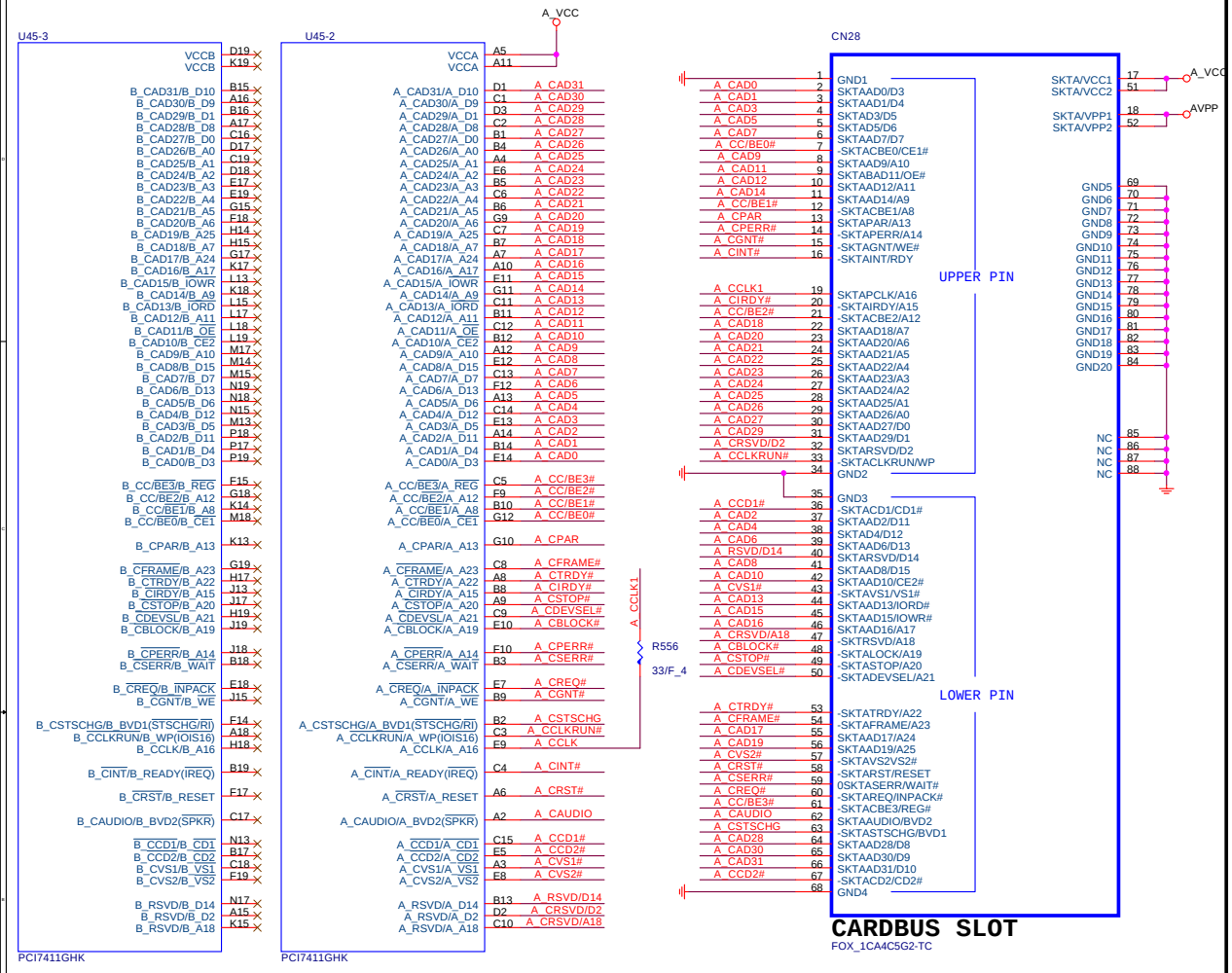

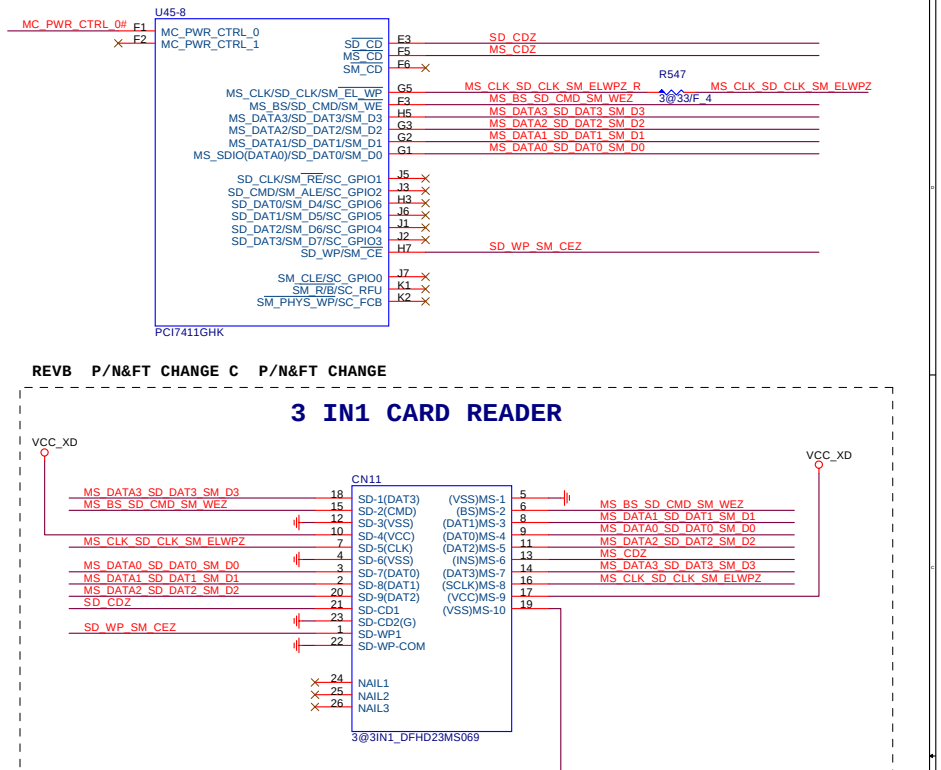

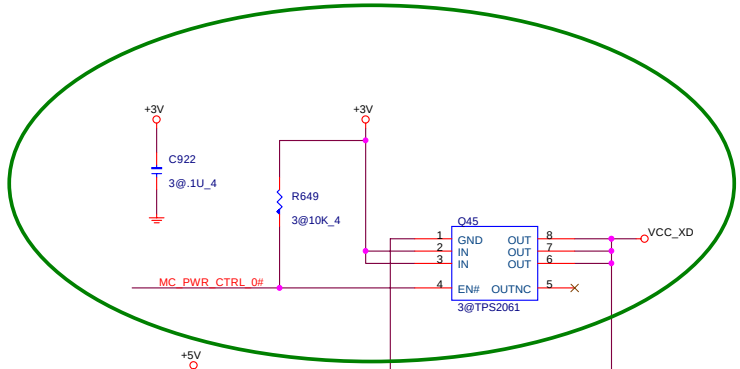

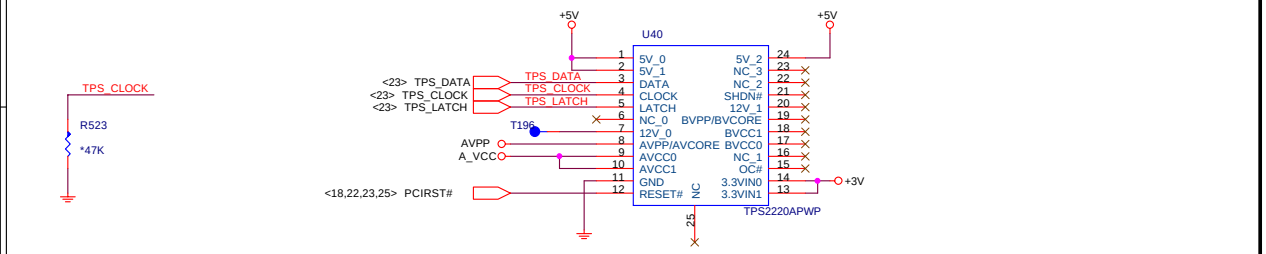

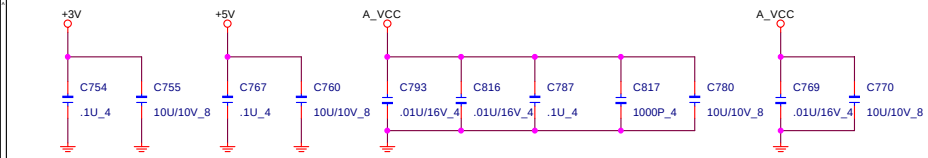

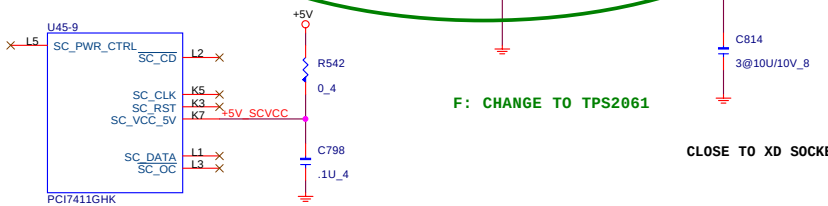

PROJECT : ZL2

Quanta Computer Inc.

Size	Document Number	Rev
	PCMCIA & 3 IN 1	F

Date: Tuesday, December 21, 2004 Sheet 24 of 41

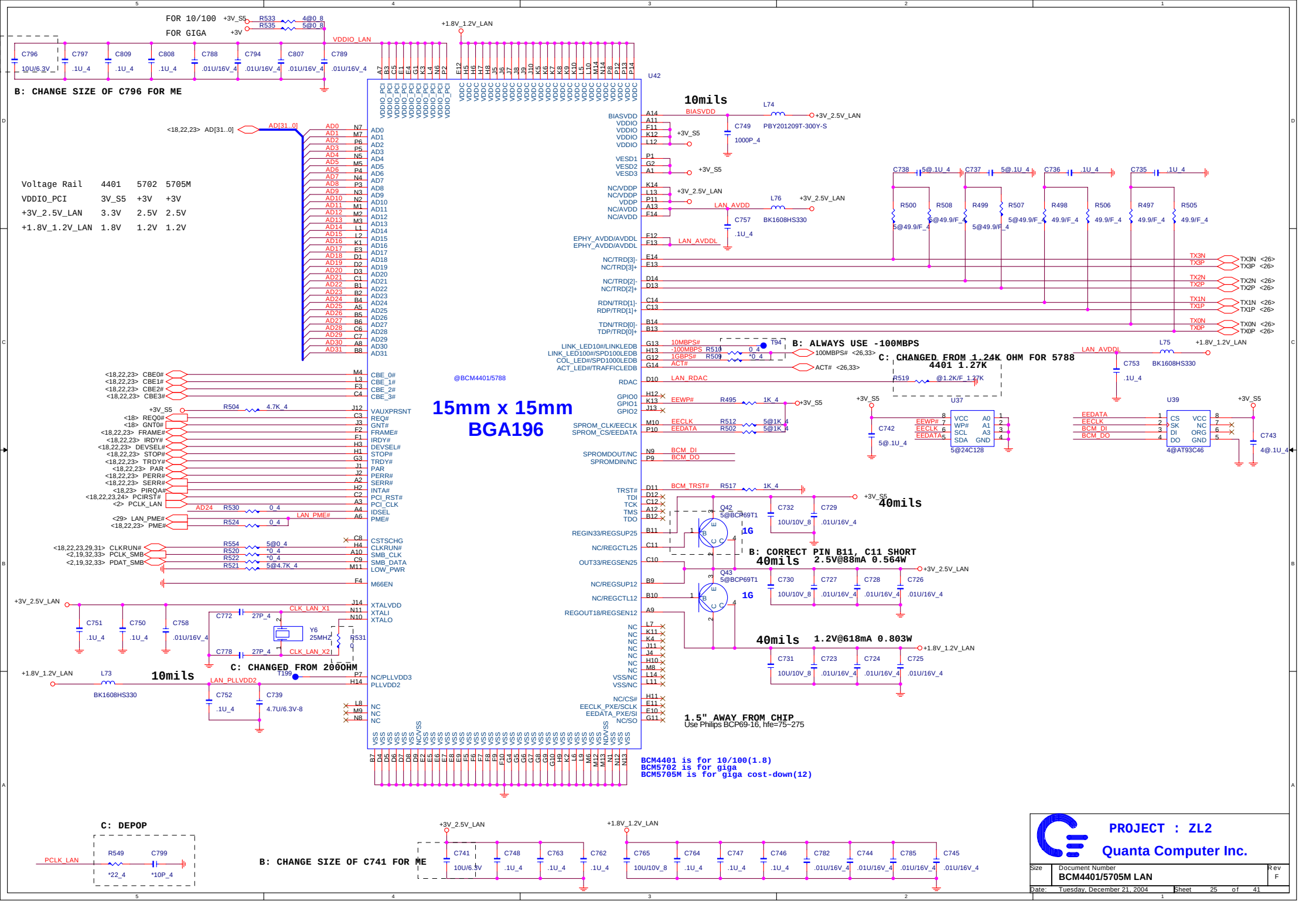
FOR 10/100
FOR GIGA
B: CHANGE SIZE OF C796 FOR ME
Voltage Rail 4401 5702 5705M
VDDIO_PCI 3V_S5 +3V +3V
+3V_2.5V_LAN 3.3V 2.5V 2.5V
+1.8V_1.2V_LAN 1.8V 1.2V 1.2V
15mm x 15mm
BGA196
@BCM4401/5788
U42
10mils
B: ALWAYS USE -100MBPS
C: CHANGED FROM 1.24K OHM FOR 5788
4401 1.27K
40mils
B: CORRECT PIN B11, C11 SHORT
2.5V@88mA 0.564W
1.2V@618mA 0.803W
C: CHANGED FROM 200OHM
1.5" AWAY FROM CHIP
Use Philips BCP69-16, hfe=75~275
BCM4401 is for 10/100(1.8)
BCM5702 is for giga
BCM5705M is for giga cost-down(12)
C: DEPOP
B: CHANGE SIZE OF C741 FOR ME
PROJECT : ZL2
Quanta Computer Inc.
Size
Document Number
BCM4401/5705M LAN
Rev
F
Date: Tuesday, December 21, 2004
Sheet 25 of 41

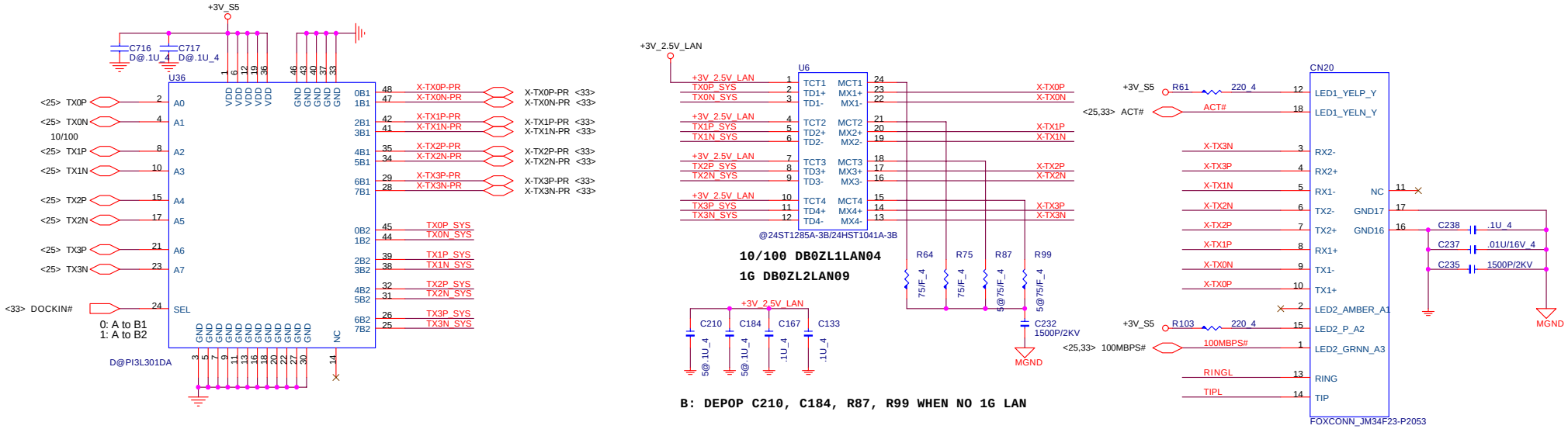

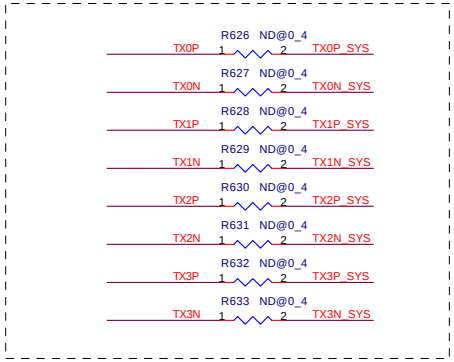

C: ADD CIRCUITS WHEN NO DOCKING

E: ADD FOR EMI REQUEST

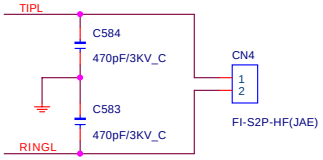

PROJECT : ZL2

Quanta Computer Inc.

Size	Document Number	Rev
	DVO CH7011A & RJ45-11 CON	F

Date: Tuesday, December 21, 2004 Sheet 26 of 41

The AMC20463-004 modem is used for mother board family MBAMC20463-004.

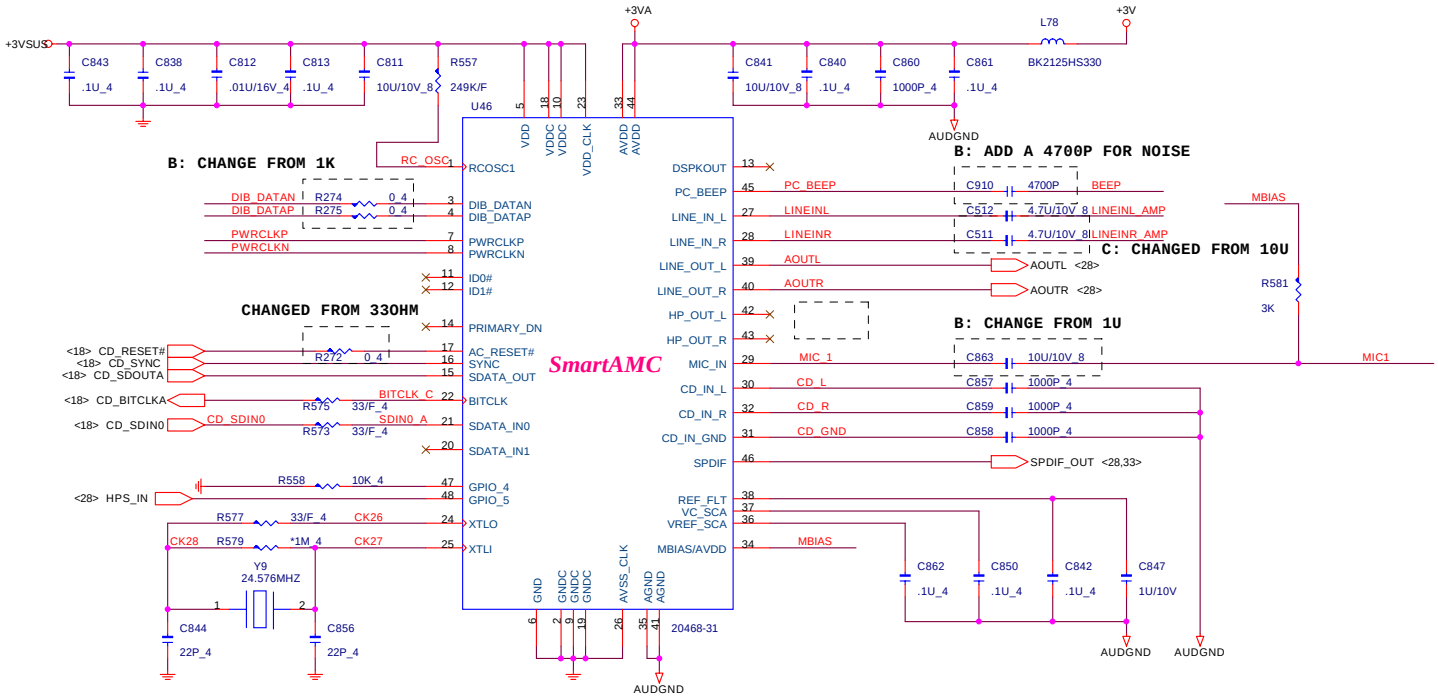

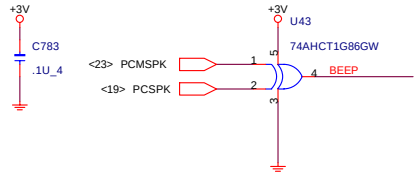

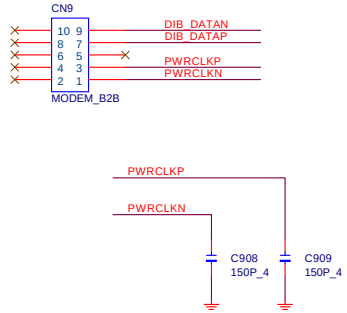

MIC

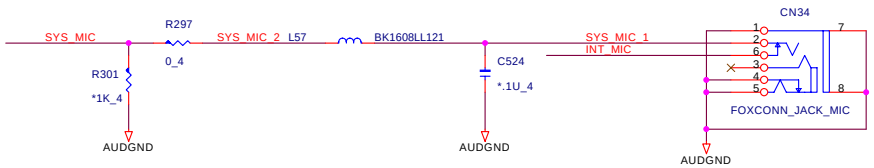

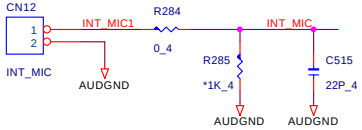

B: CHANGE TO HIGH ACTIVE

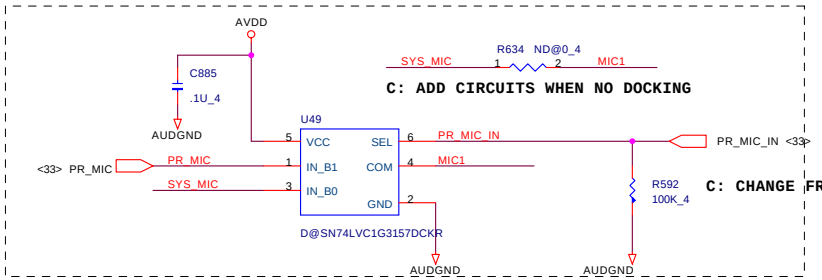

SEL	FUNCTION
LOW	IN_B0
HIGH	IN_B1

LINE IN

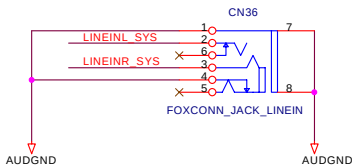

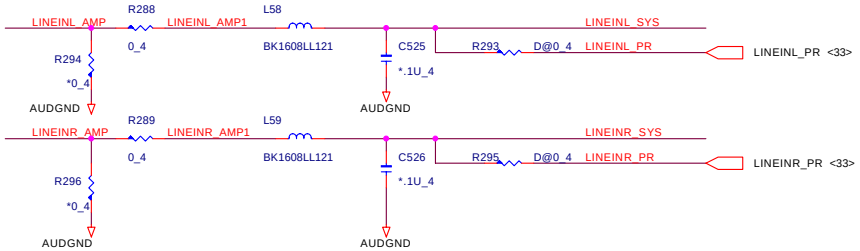

PROJECT : ZL2

Quanta Computer Inc.

Size	Document Number	Rev
	AUDIO	F

Date: Tuesday, December 21, 2004 Sheet 27 of 41

GAIN1	SPKR MODE	HP MODE
0	10.5	3
1	9	0

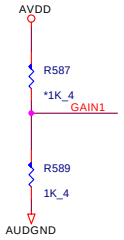

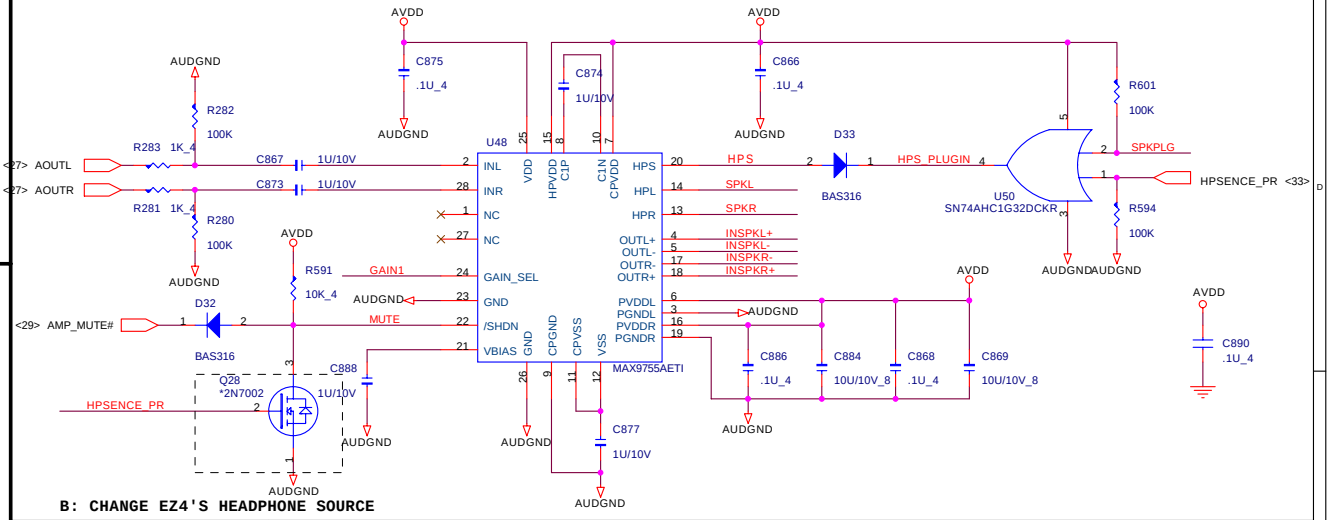

B: CHANGE EZ4'S HEADPHONE SOURCE

AMP POWER

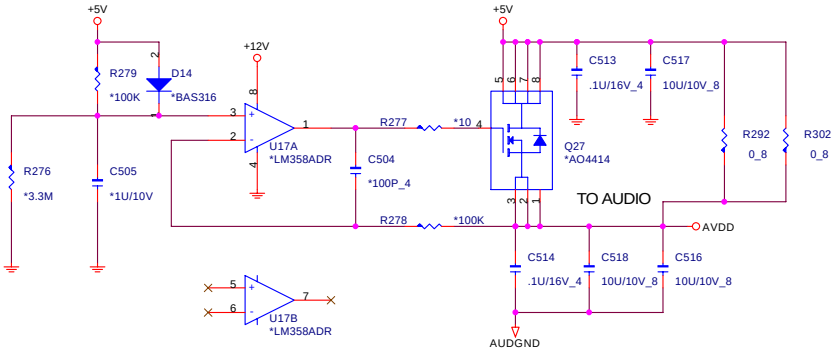

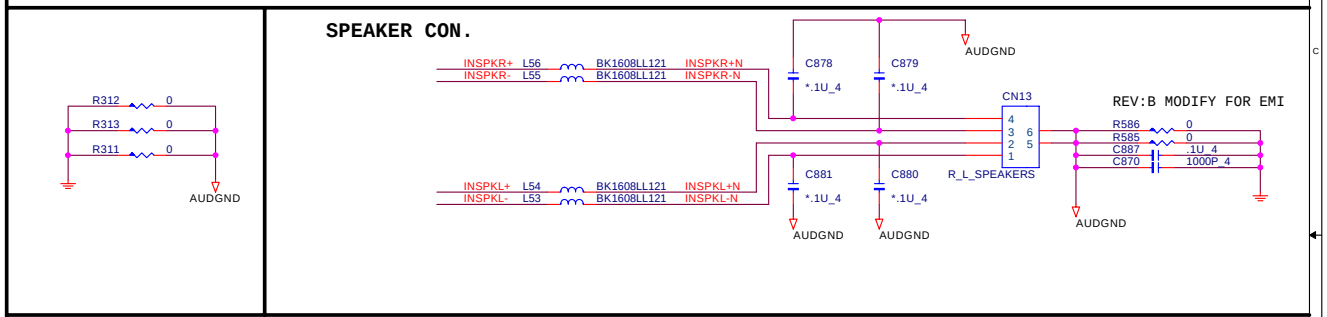

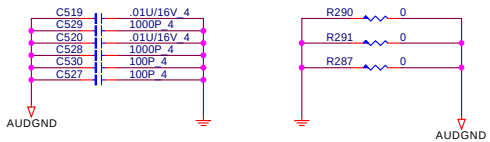

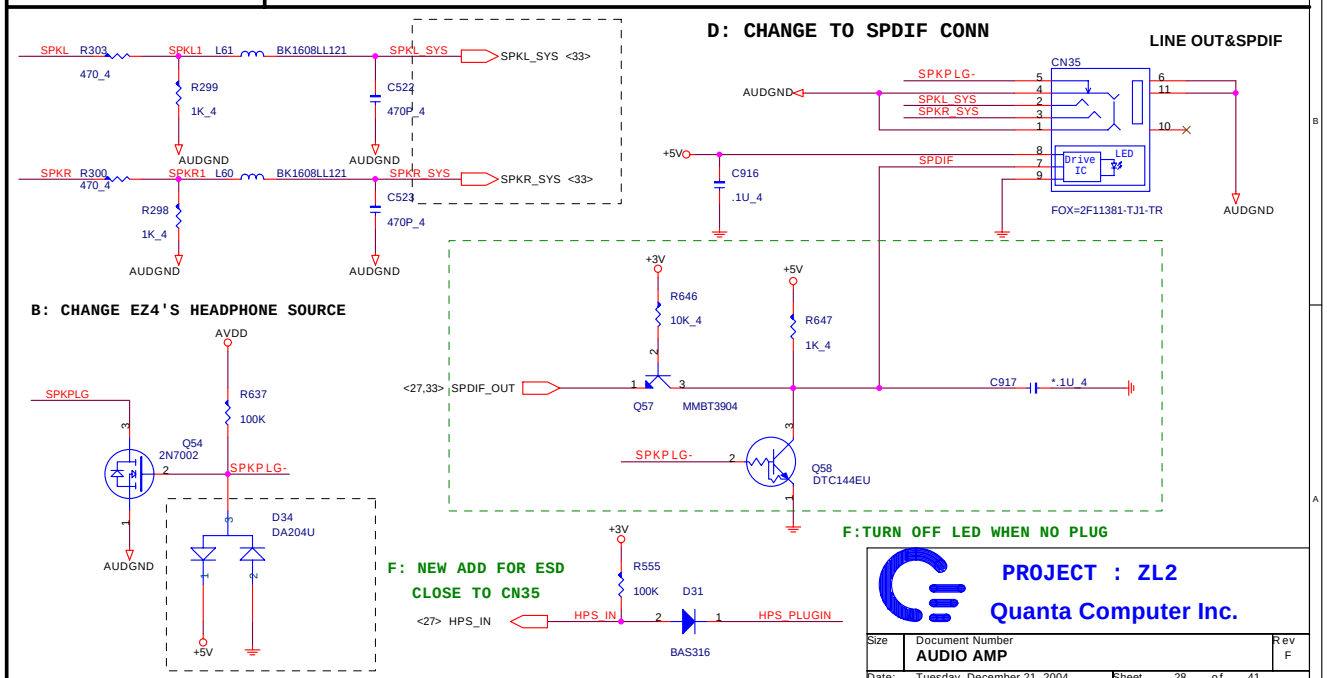

F: RESTORE PAD26 FOR EMI REQUEST

E: REMOVE PAD26, AND PAD35 CHANGE LOCATION

B: ADD SPRING FOR MODEM CABLE

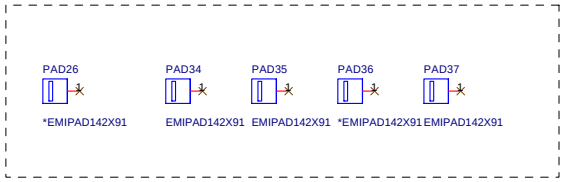

PROJECT : ZL2

Quanta Computer Inc.

Size	Document Number	Rev
	AUDIO AMP	F

Date: Tuesday, December 21, 2004 Sheet 28 of 41

LDRQ#(pin 8) internal is no use

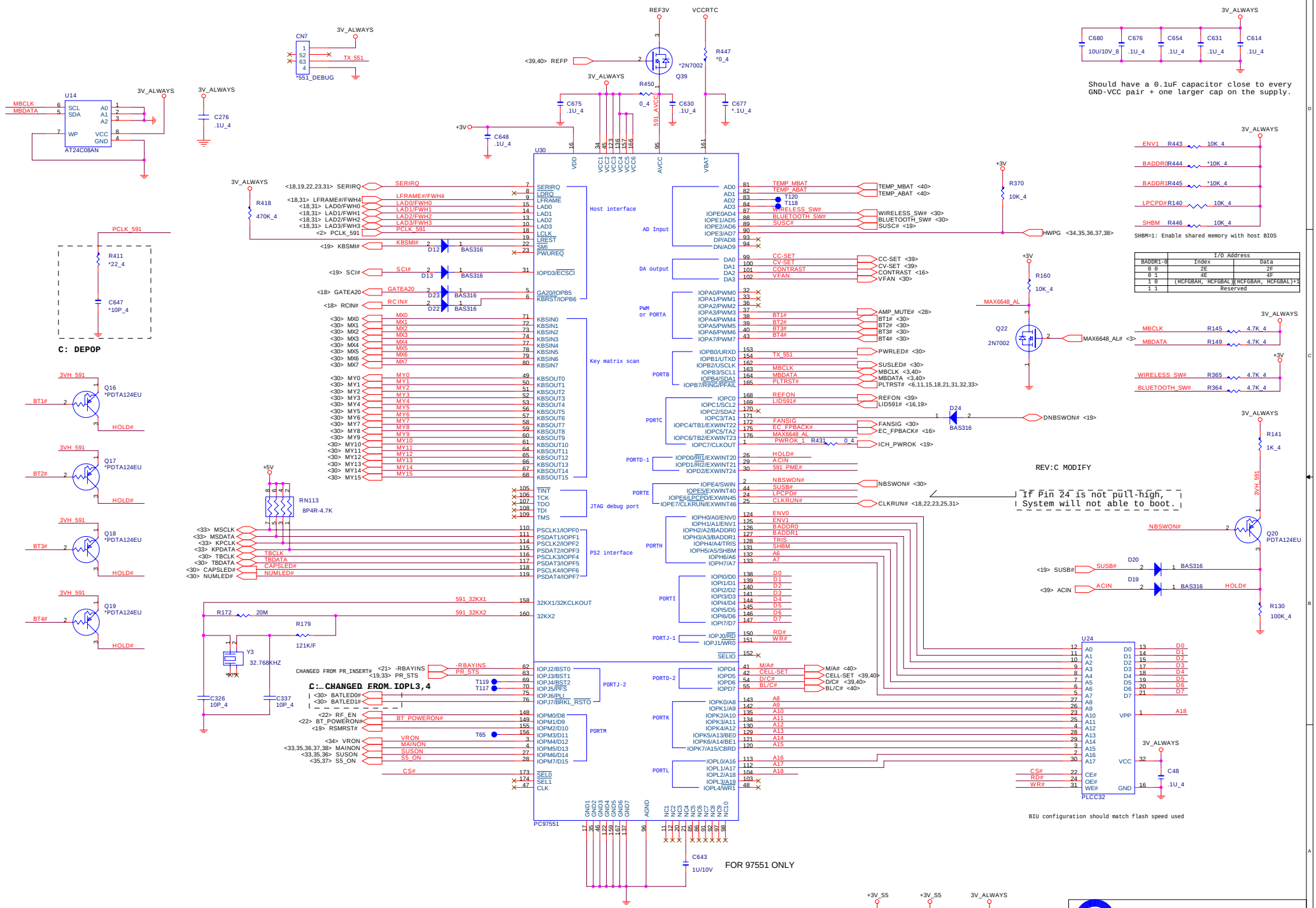

BADDR1-0	I/O Address	
	Index	Data
0 0	2E	2F
0 1	4E	4F
1 0	(HCFGBAH, HCFGBAL)	(HCFGBAH, HCFGBAL)+1
1 1	Reserved	

PROJECT : ZL2		
Quanta Computer Inc.		
Size	Document Number: 97551 & FLASH	Rev F
Date: Tuesday, December 21, 2004	Sheet 29 of 41	

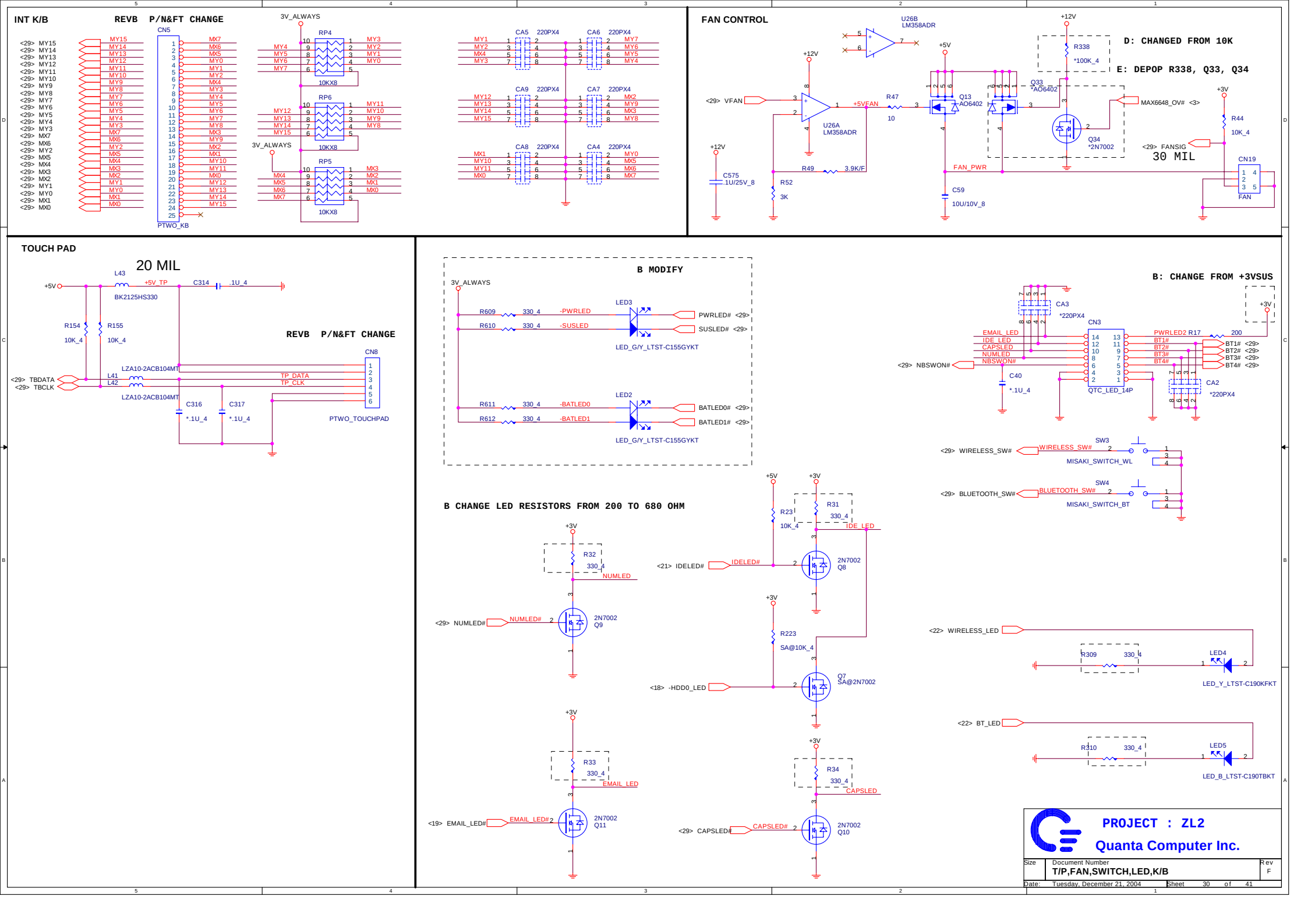
INT K/B
REVB P/N&FT CHANGE
CN5
PTWO_KB
3V_ALWAYS
RP4
RP6
RP5
10KX8
CA5 220PX4
CA6 220PX4
CA9 220PX4
CA7 220PX4
CA8 220PX4
CA4 220PX4
FAN CONTROL
U26B LM358ADR
U26A LM358ADR
+12V
+5V
<29> VFAN
+5VFAN
R47
10
Q13 AO6402
Q33 *AO6402
Q34 *2N7002
R338 *100K_4
D: CHANGED FROM 10K
E: DEPOP R338, Q33, Q34
MAX6648_OV# <3>
+3V
R44 10K_4
<29> FANSIG
30 MIL
CN19
FAN
C575 .1U/25V_8
R52 3K
R49 3.9K/F
FAN_PWR
C59 10U/10V_8
TOUCH PAD
20 MIL
L43 BK2125HS330
+5V_TP
C314 .1U_4
R154 10K_4
R155 10K_4
REVB P/N&FT CHANGE
CN8
PTWO_TOUCHPAD
LZA10-2ACB104MT
L41
L42
<29> TBDATA
<29> TBCLK
TP_DATA
TP_CLK
C316 *.1U_4
C317 *.1U_4
B MODIFY
3V_ALWAYS
R609 330_4 -PWRLED
R610 330_4 -SUSLED
LED3
LED_G/Y_LTST-C155GYKT
PWRLED# <29>
SUSLED# <29>
R611 330_4 -BATLED0
R612 330_4 -BATLED1
LED2
BATLED0# <29>
BATLED1# <29>
B: CHANGE FROM +3VSUS
CA3 *220PX4
CN3
QTC_LED_14P
EMAIL_LED
IDE_LED
CAPSLED
NUMLED
NBSWON#
<29> NBSWON#
C40 *.1U_4
PWRLED2
R17 200
BT1#
BT2#
BT3#
BT4#
CA2 *220PX4
<29> WIRELESS_SW#
WIRELESS_SW#
SW3
MISAKI_SWITCH_WL
<29> BLUETOOTH_SW#
BLUETOOTH_SW#
SW4
MISAKI_SWITCH_BT
B CHANGE LED RESISTORS FROM 200 TO 680 OHM
R32 330_4
NUMLED
<29> NUMLED#
2N7002 Q9
R23 10K_4
R31 330_4
IDE_LED
<21> IDELED#
IDELED#
2N7002 Q8
R223 SA@10K_4
<18> -HDD0_LED
Q7 SA@2N7002
R33 330_4
EMAIL_LED
<19> EMAIL_LED#
2N7002 Q11
R34 330_4
CAPSLED
<29> CAPSLED#
2N7002 Q10
<22> WIRELESS_LED
R309 330_4
LED4
LED_Y_LTST-C190KFKT
<22> BT_LED
R310 330_4
LED5
LED_B_LTST-C190TBKT
PROJECT : ZL2
Quanta Computer Inc.
Size
Document Number
T/P,FAN,SWITCH,LED,K/B
Rev F
Date: Tuesday, December 21, 2004
Sheet 30 of 41

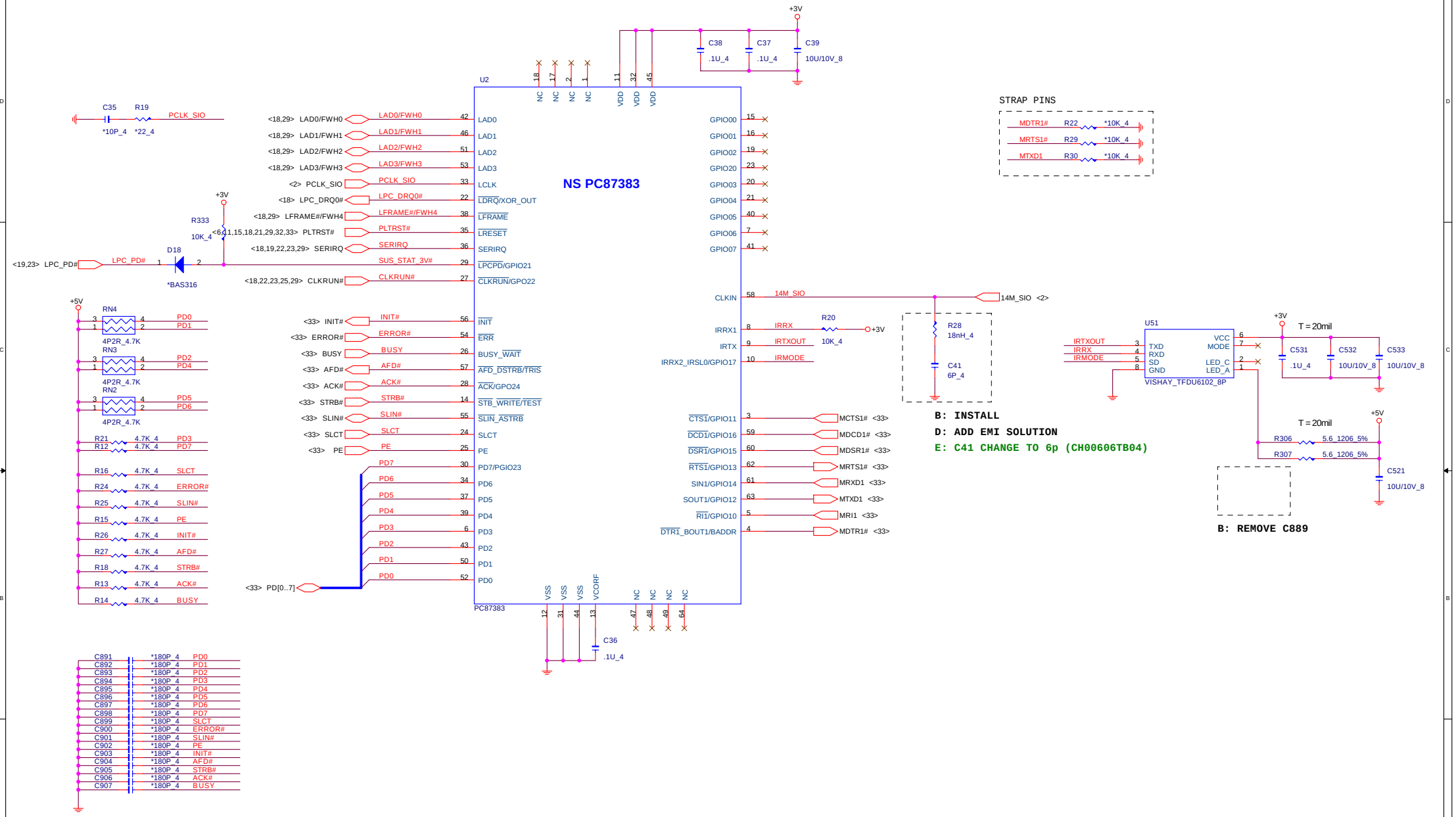

PROJECT : ZL2

Quanta Computer Inc.

Size	Document Number	Rev
	EZ PORT & SIO (87383)	F

Date: Tuesday, December 21, 2004 Sheet 31 of 41

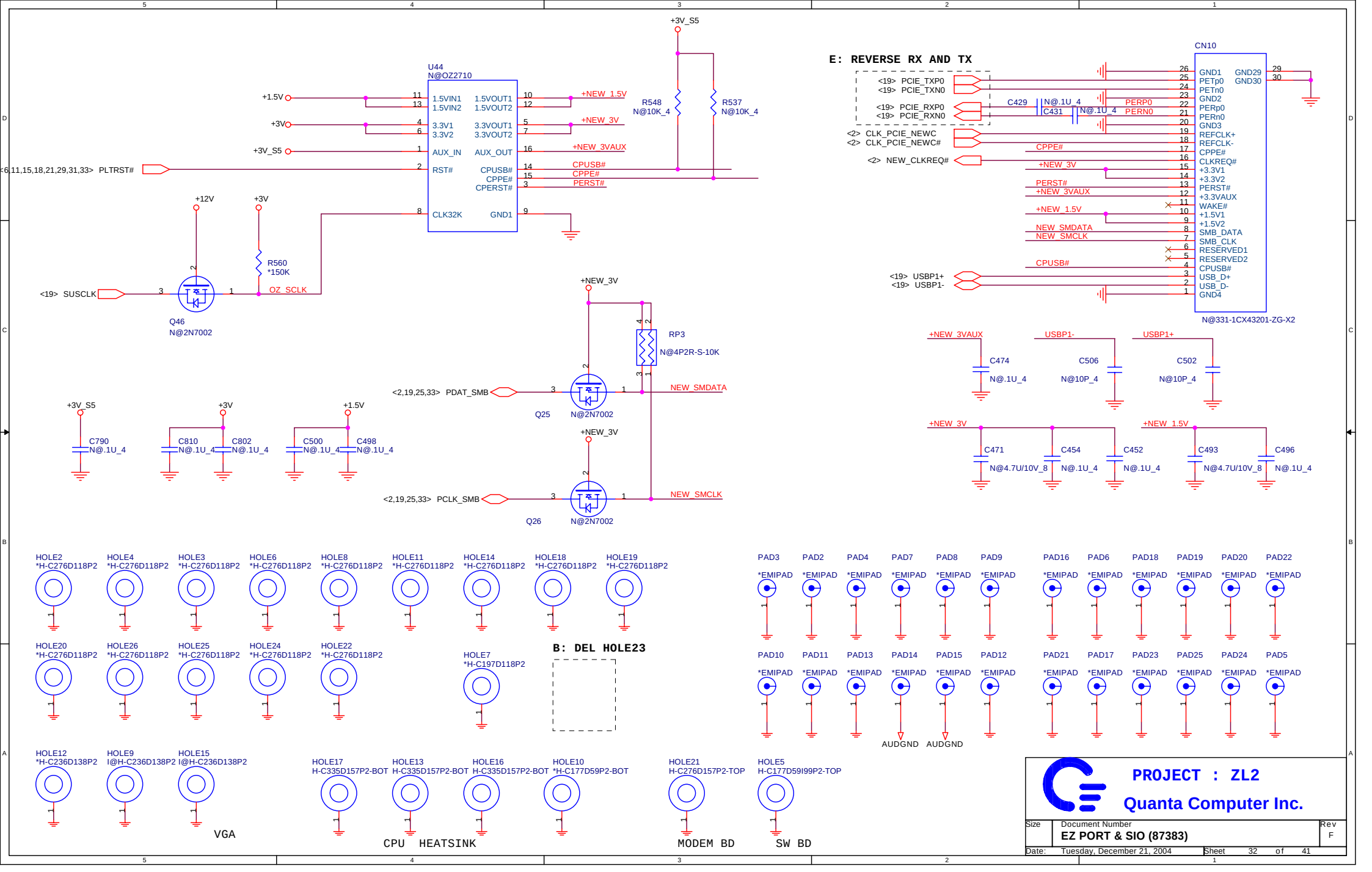
U44
N@OZ2710
1.5VIN1
1.5VIN2
3.3V1
3.3V2
AUX_IN
RST#
CLK32K
1.5VOUT1
1.5VOUT2
3.3VOUT1
3.3VOUT2
AUX_OUT
CPUSB#
CPPE#
CPERST#
GND1
+1.5V
+3V
+3V_S5
+NEW_1.5V
+NEW_3V
+NEW_3VAUX
CPUSB#
CPPE#
PERST#
<6,11,15,18,21,29,31,33> PLTRST#
R548
N@10K_4
R537
N@10K_4
+12V
R560
*150K
OZ_SCLK
<19> SUSCLK
Q46
N@2N7002
RP3
N@4P2R-S-10K
<2,19,25,33> PDAT_SMB
Q25
N@2N7002
NEW_SMDATA
C790
N@.1U_4
C810
N@.1U_4
C802
N@.1U_4
C500
N@.1U_4
C498
N@.1U_4
<2,19,25,33> PCLK_SMB
Q26
N@2N7002
NEW_SMCLK
E: REVERSE RX AND TX
CN10
<19> PCIE_TXP0
<19> PCIE_TXN0
<19> PCIE_RXP0
<19> PCIE_RXN0
C429
N@.1U_4
C431
N@.1U_4
PERP0
PERN0
<2> CLK_PCIE_NEWC
<2> CLK_PCIE_NEWC#
<2> NEW_CLKREQ#
CPPE#
+NEW_3V
PERST#
+NEW_3VAUX
+NEW_1.5V
NEW_SMDATA
NEW_SMCLK
CPUSB#
<19> USBP1+
<19> USBP1-
GND1
PETp0
PETn0
GND2
PERp0
PERn0
GND3
REFCLK+
REFCLK-
CPPE#
CLKREQ#
+3.3V1
+3.3V2
PERST#
+3.3VAUX
WAKE#
+1.5V1
+1.5V2
SMB_DATA
SMB_CLK
RESERVED1
RESERVED2
CPUSB#
USB_D+
USB_D-
GND4
GND29
GND30
N@331-1CX43201-ZG-X2
+NEW_3VAUX
USBP1-
USBP1+
C474
N@.1U_4
C506
N@10P_4
C502
N@10P_4
+NEW_3V
+NEW_1.5V
C471
N@4.7U/10V_8
C454
N@.1U_4
C452
N@.1U_4
C493
N@4.7U/10V_8
C496
N@.1U_4
HOLE2 *H-C276D118P2
HOLE4 *H-C276D118P2
HOLE3 *H-C276D118P2
HOLE6 *H-C276D118P2
HOLE8 *H-C276D118P2
HOLE11 *H-C276D118P2
HOLE14 *H-C276D118P2
HOLE18 *H-C276D118P2
HOLE19 *H-C276D118P2
HOLE20 *H-C276D118P2
HOLE26 *H-C276D118P2
HOLE25 *H-C276D118P2
HOLE24 *H-C276D118P2
HOLE22 *H-C276D118P2
HOLE7 *H-C197D118P2
B: DEL HOLE23
PAD3 *EMIPAD
PAD2 *EMIPAD
PAD4 *EMIPAD
PAD7 *EMIPAD
PAD8 *EMIPAD
PAD9 *EMIPAD
PAD16 *EMIPAD
PAD6 *EMIPAD
PAD18 *EMIPAD
PAD19 *EMIPAD
PAD20 *EMIPAD
PAD22 *EMIPAD
PAD10 *EMIPAD
PAD11 *EMIPAD
PAD13 *EMIPAD
PAD14 *EMIPAD
PAD15 *EMIPAD
PAD12 *EMIPAD
PAD21 *EMIPAD
PAD17 *EMIPAD
PAD23 *EMIPAD
PAD25 *EMIPAD
PAD24 *EMIPAD
PAD5 *EMIPAD
AUDGND
AUDGND
HOLE12 *H-C236D138P2
HOLE9 I@H-C236D138P2
HOLE15 I@H-C236D138P2
VGA
HOLE17 H-C335D157P2-BOT
HOLE13 H-C335D157P2-BOT
HOLE16 H-C335D157P2-BOT
HOLE10 *H-C177D59P2-BOT
CPU HEATSINK
HOLE21 H-C276D157P2-TOP
MODEM BD
HOLE5 H-C177D59I99P2-TOP
SW BD
PROJECT : ZL2
Quanta Computer Inc.
Size
Document Number
EZ PORT & SIO (87383)
Rev
F
Date: Tuesday, December 21, 2004
Sheet 32 of 41

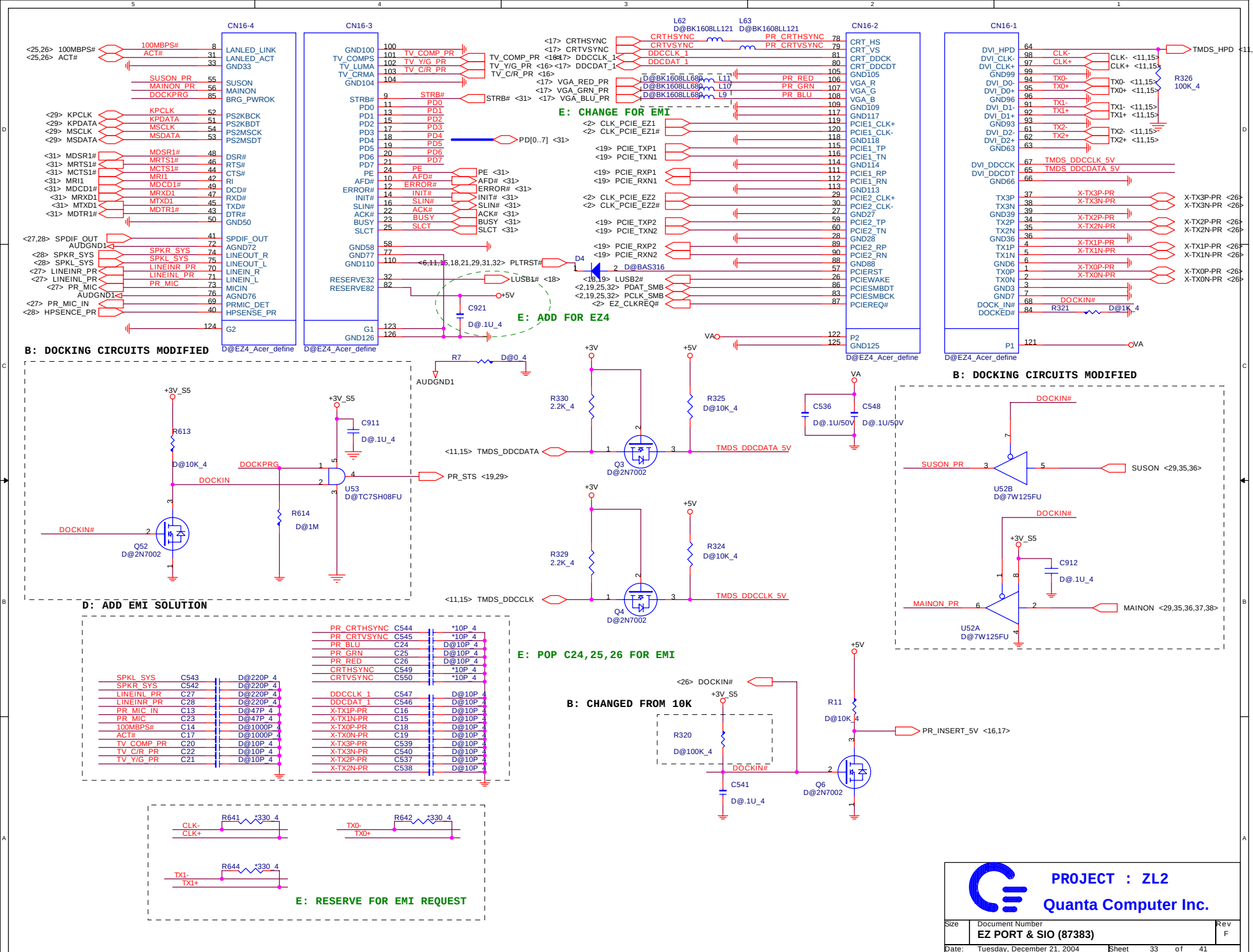
CN16-4
CN16-3
CN16-2
CN16-1
B: DOCKING CIRCUITS MODIFIED
E: CHANGE FOR EMI
E: ADD FOR EZ4
D: ADD EMI SOLUTION
E: POP C24,25,26 FOR EMI
B: CHANGED FROM 10K
E: RESERVE FOR EMI REQUEST
PROJECT : ZL2
Quanta Computer Inc.
Size
Document Number
EZ PORT & SIO (87383)
Rev
F
Date: Tuesday, December 21, 2004
Sheet 33 of 41

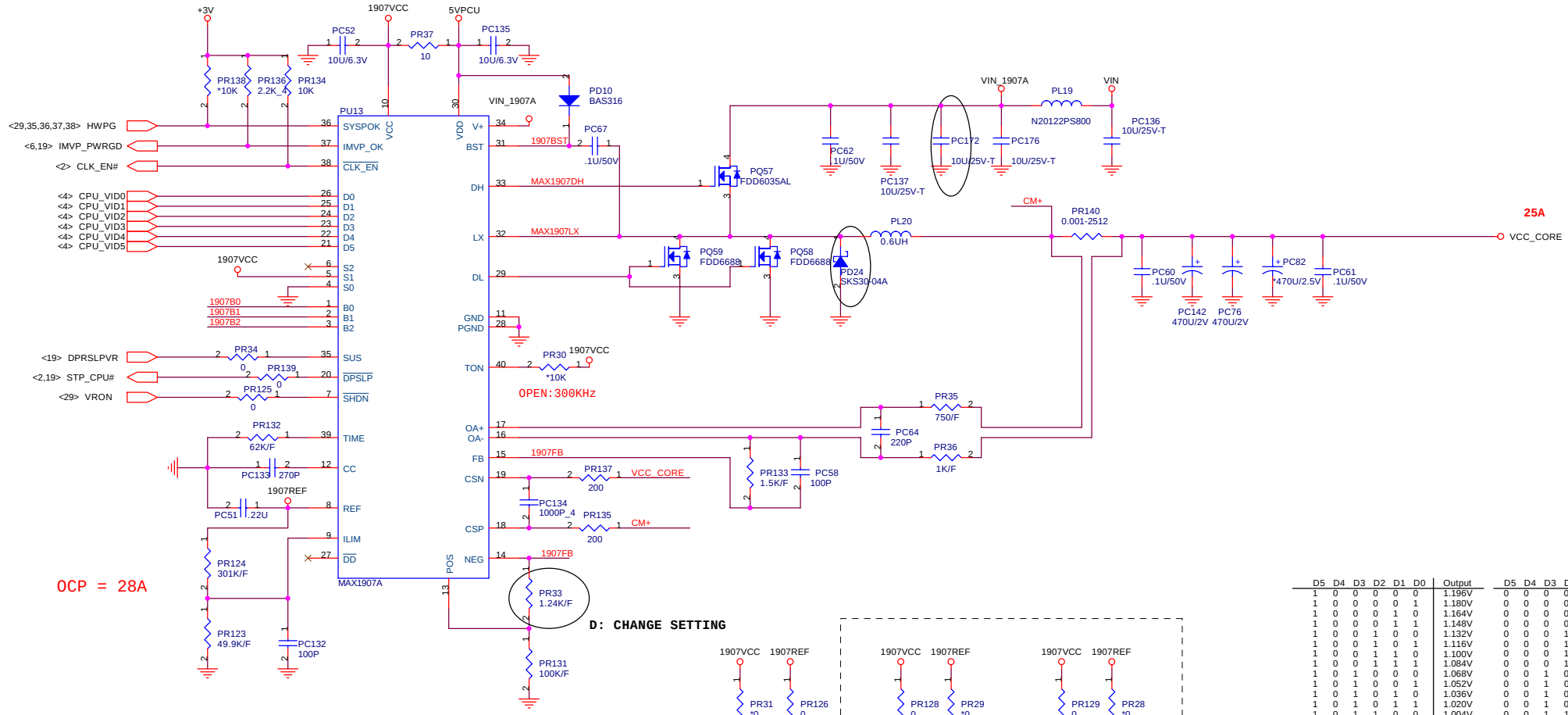

D5	D4	D3	D2	D1	D0	Output	D5	D4	D3	D2	D1	D0	Output
1	0	0	0	0	0	1.196V	0	0	0	0	0	0	1.708V
1	0	0	0	0	1	1.180V	0	0	0	0	0	1	1.692V
1	0	0	0	1	0	1.164V	0	0	0	0	1	0	1.676V
1	0	0	0	1	1	1.148V	0	0	0	0	1	1	1.660V
1	0	0	1	0	0	1.132V	0	0	0	1	0	0	1.644V
1	0	0	1	0	1	1.116V	0	0	0	1	0	1	1.628V
1	0	0	1	1	0	1.100V	0	0	0	1	1	0	1.612V
1	0	0	1	1	1	1.084V	0	0	0	1	1	1	1.596V
1	0	1	0	0	0	1.068V	0	0	1	0	0	0	1.580V
1	0	1	0	0	1	1.052V	0	0	1	0	0	1	1.564V
1	0	1	0	1	0	1.036V	0	0	1	0	1	0	1.548V
1	0	1	0	1	1	1.020V	0	0	1	0	1	1	1.532V
1	0	1	1	0	0	1.004V	0	0	1	1	0	0	1.516V
1	0	1	1	0	1	0.988V	0	0	1	1	0	1	1.500V
1	0	1	1	1	0	0.972V	0	0	1	1	1	0	1.484V
1	0	1	1	1	1	0.956V	0	0	1	1	1	1	1.468V
1	1	0	0	0	0	0.940V	0	1	0	0	0	0	1.452V
1	1	0	0	0	1	0.924V	0	1	0	0	0	1	1.436V
1	1	0	0	1	0	0.908V	0	1	0	0	1	0	1.420V
1	1	0	0	1	1	0.892V	0	1	0	0	1	1	1.404V
1	1	0	1	0	0	0.876V	0	1	0	1	0	0	1.388V
1	1	0	1	0	1	0.860V	0	1	0	1	0	1	1.372V
1	1	0	1	1	0	0.844V	0	1	0	1	1	0	1.356V
1	1	0	1	1	1	0.828V	0	1	0	1	1	1	1.340V
1	1	1	0	0	0	0.812V	0	1	1	0	0	0	1.324V
1	1	1	0	0	1	0.796V	0	1	1	0	0	1	1.308V
1	1	1	0	1	0	0.780V	0	1	1	0	1	0	1.292V
1	1	1	0	1	1	0.764V	0	1	1	0	1	1	1.276V
1	1	1	1	0	0	0.748V	0	1	1	1	0	0	1.260V
1	1	1	1	0	1	0.732V	0	1	1	1	0	1	1.244V
1	1	1	1	1	0	0.716V	0	1	1	1	1	0	1.228V
1	1	1	1	1	1	0.700V	0	1	1	1	1	1	1.212V

SUSPEND MODE (SUS=HIGH)

S2	S1	S0	Output
OPEN	VCC	GND	0.748V

VCC_BOOT

B2	B1	B0	Output
GND	GND	GND	1.708V
REF	REF	REF	1.372V
OPEN	OPEN	OPEN	1.036V
VCC	VCC	VCC	0.700V
REF	VCC	VCC	1.212V

PROJECT : ZL2

Quanta Computer Inc.

Size	Document Number	Rev
	CPU CORE (MAX1907)	F

Date: Tuesday, December 21, 2004 Sheet 34 of 41

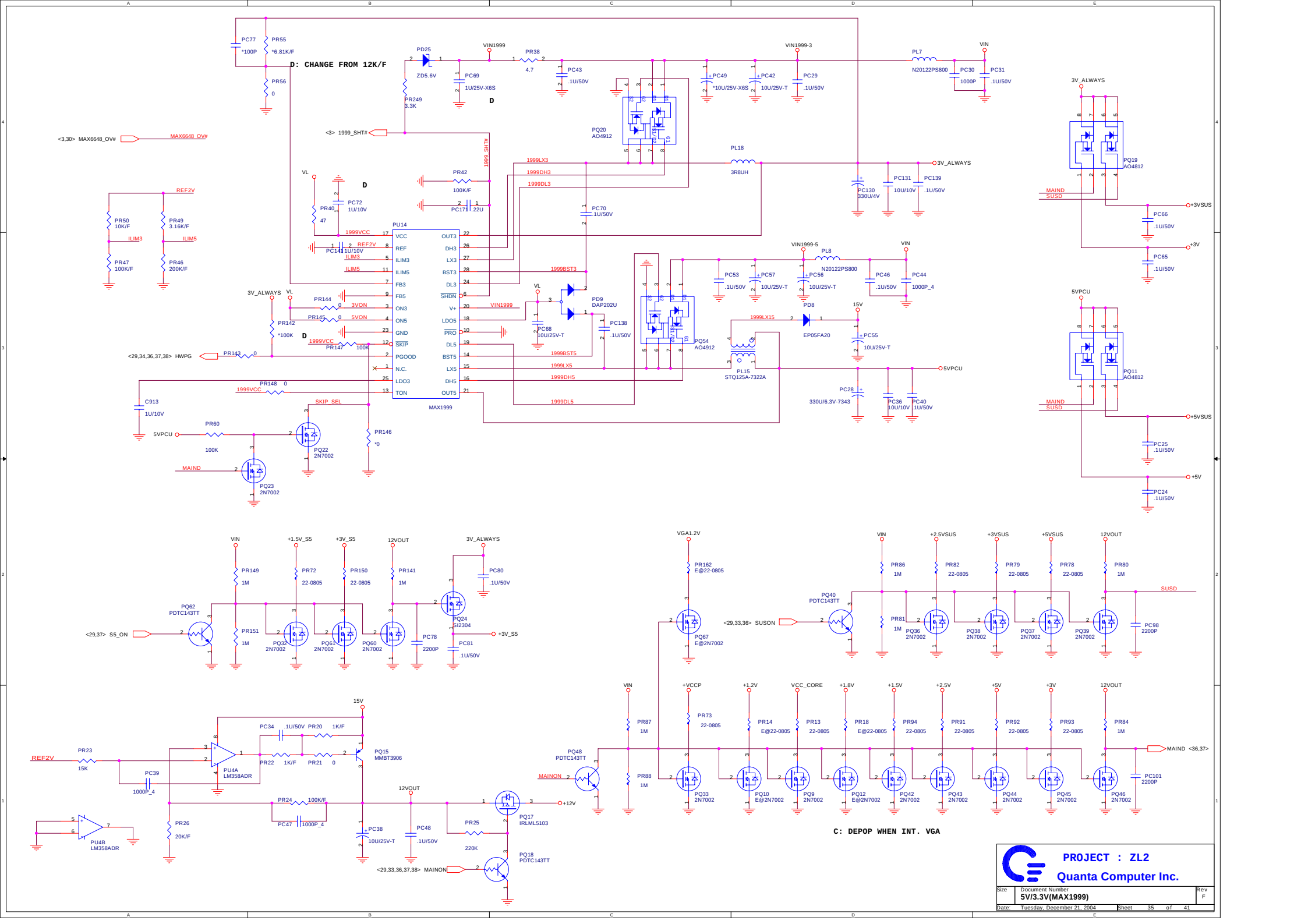
D: CHANGE FROM 12K/F
C: DEPOP WHEN INT. VGA
PROJECT : ZL2
Quanta Computer Inc.
Size
Document Number
5V/3.3V(MAX1999)
Rev
F
Date: Tuesday, December 21, 2004
Sheet 35 of 41
PU14
MAX1999
VCC
REF
ILIM3
ILIM5
FB3
FB5
ON3
ON5
GND
SKIP
PGOOD
N.C.
LDO3
TON
OUT3
DH3
LX3
BST3
DL3
SHDN
V+
LDO5
PRO
DL5
BST5
LX5
DH5
OUT5
PQ20 AO4912
PQ54 AO4912
PQ19 AO4812
PQ11 AO4812
PL15 STQ125A-7322A
PL18 3R8UH
PL7 N20122PS800
PL8 N20122PS800
PD25 ZD5.6V
PD9 DAP202U
PD8 EP05FA20
VIN1999
VIN1999-3
VIN1999-5
VIN
3V_ALWAYS
5VPCU
+3VSUS
+5VSUS
+3V
+5V
+3V_S5
+12V
12VOUT
+1.5V_S5
+2.5VSUS
VGA1.2V
+VCCP
+1.2V
VCC_CORE
+1.8V
+1.5V
+2.5V
REF2V
VL
15V
SUSD
MAIND
MAINON
SKIP_SEL
1999_SHT#
MAX6648_OV#
1999LX3
1999DH3
1999DL3
1999BST3
1999LX5
1999DH5
1999DL5
1999BST5
1999LX15
1999VCC
3VON
5VON
HWPG
S5_ON
SUSON
PQ62 PDTC143TT
PQ40 PDTC143TT
PQ48 PDTC143TT
PQ18 PDTC143TT
PQ15 MMBT3906
PQ17 IRLML5103
PQ24 SI2304
PU4A LM358ADR
PU4B LM358ADR
PQ22 2N7002
PQ23 2N7002
PQ67 E@2N7002
PQ33 2N7002
PQ10 E@2N7002
PQ9 2N7002
PQ12 E@2N7002
PQ42 2N7002
PQ43 2N7002
PQ44 2N7002
PQ45 2N7002
PQ46 2N7002
PQ36 2N7002
PQ38 2N7002
PQ37 2N7002
PQ39 2N7002
PQ32 2N7002
PQ61 2N7002
PQ60 2N7002

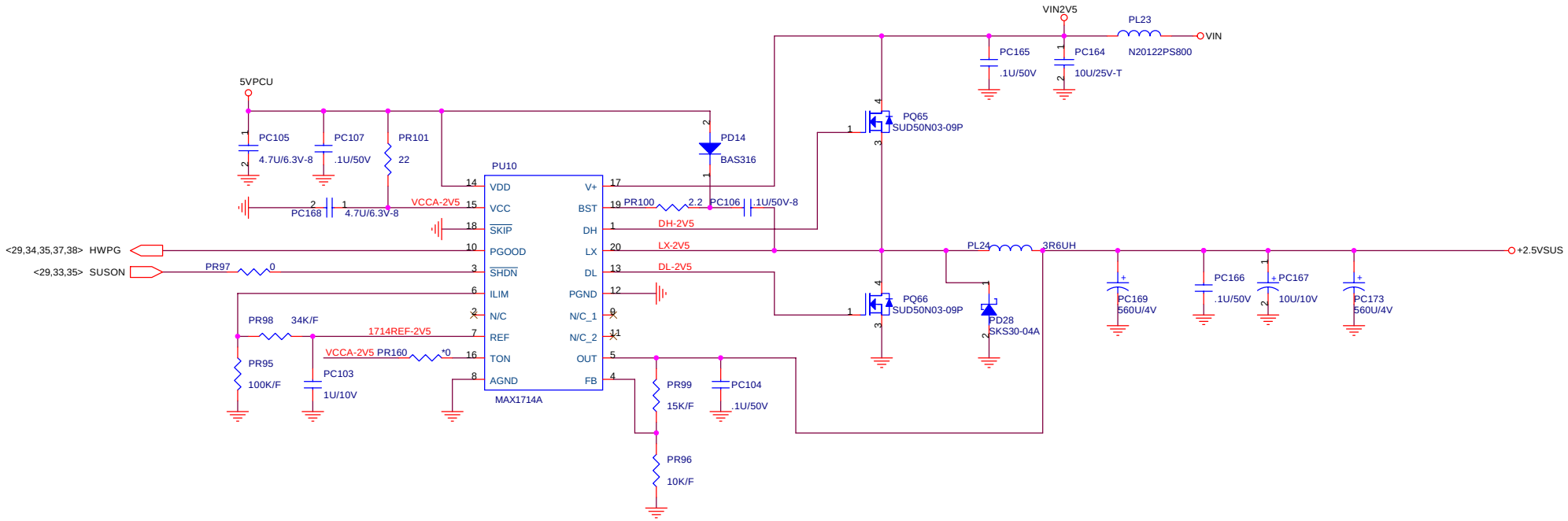

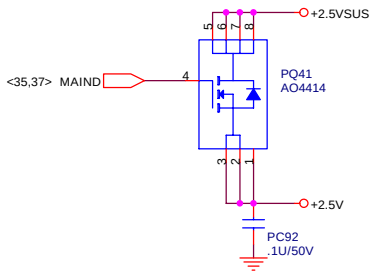

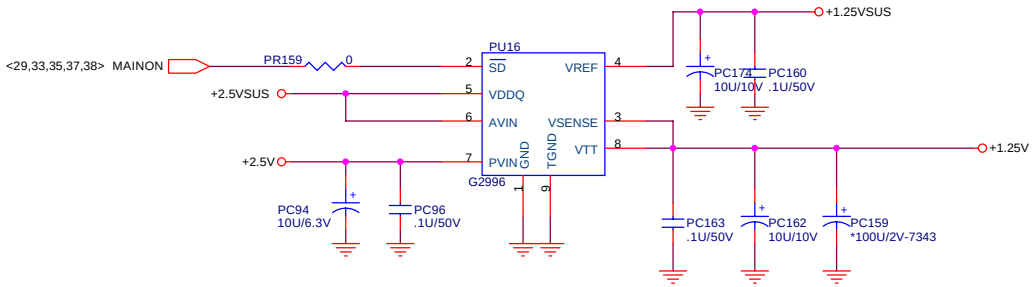

PROJECT : ZL2

Quanta Computer Inc.

Size	Document Number	Rev
	2.5VSUS / +1.25TERM	F
Date: Tuesday, December 21, 2004	Sheet 36 of 41	

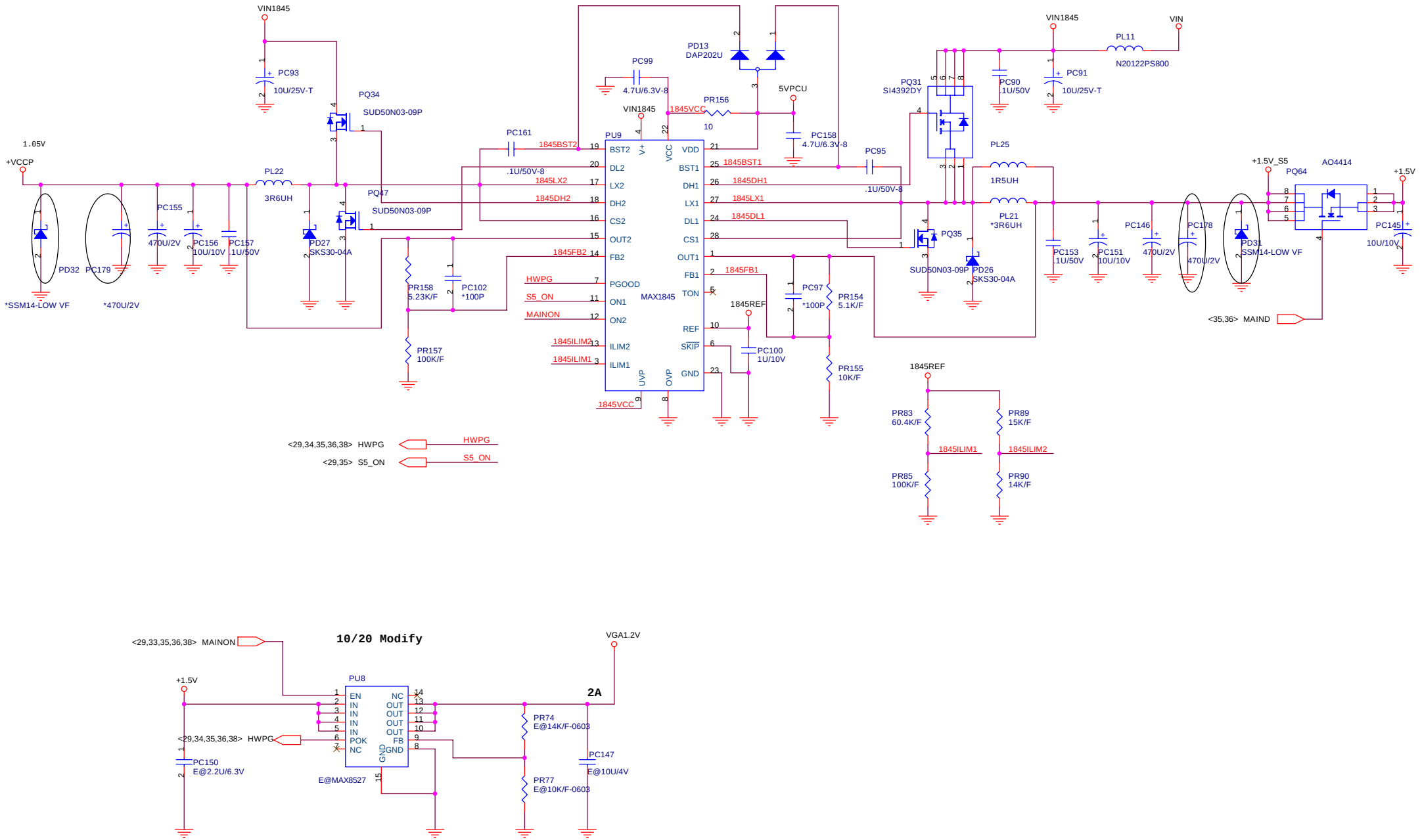

PROJECT : ZL2

Quanta Computer Inc.

Size	Document Number	Rev
	+1.5 / CPUIO	F

Date: Tuesday, December 21, 2004 Sheet 37 of 41

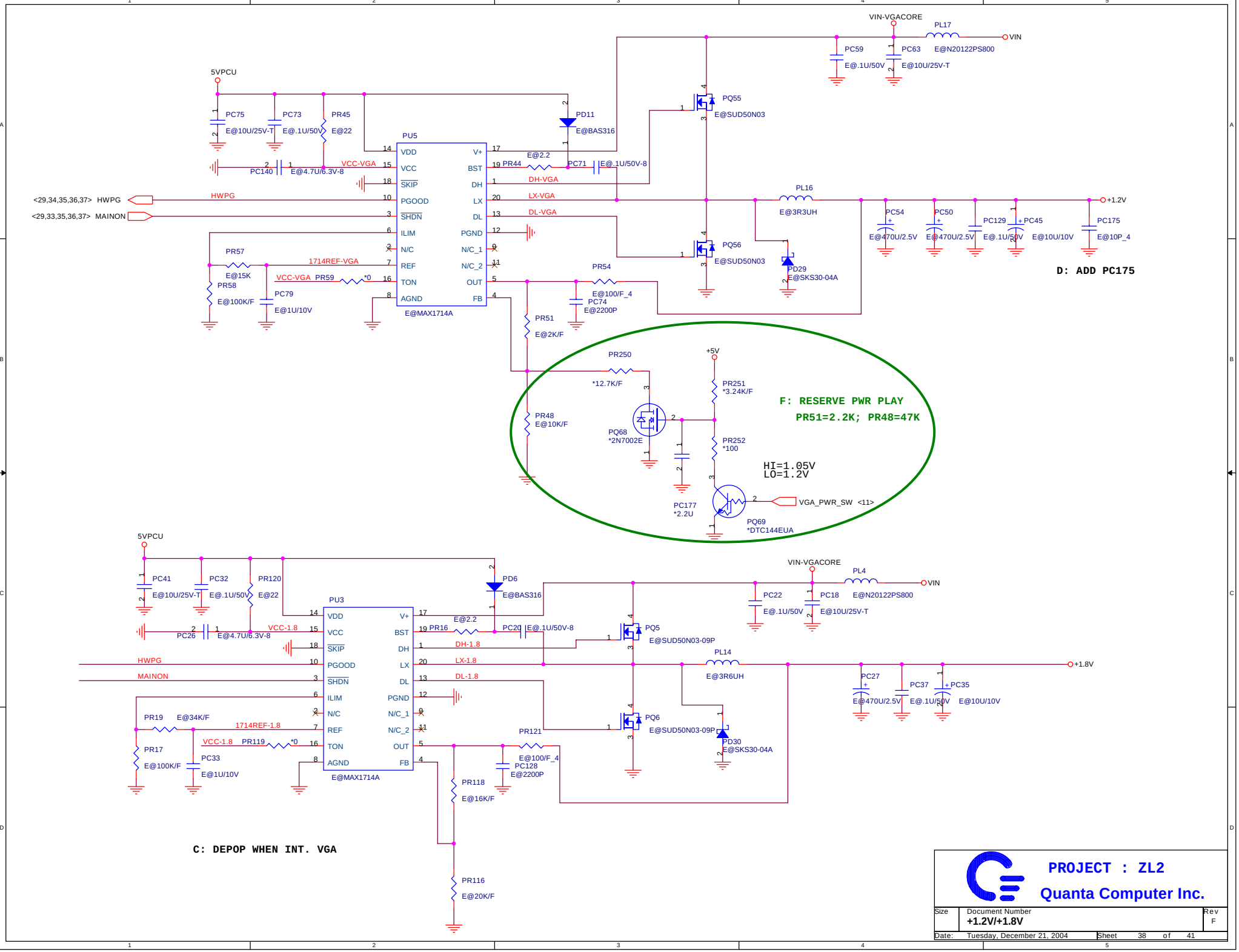
VIN-VGACORE
PL17
VIN
PC59
E@.1U/50V
PC63
E@10U/25V-T
E@N20122PS800
5VPCU
PC75
E@10U/25V-T
PC73
E@.1U/50V
PR45
E@22
PU5
PD11
E@BAS316
PQ55
E@SUD50N03
VDD
VCC
SKIP
PGOOD
SHDN
ILIM
N/C
REF
TON
AGND
V+
BST
DH
LX
DL
PGND
N/C_1
N/C_2
OUT
FB
E@MAX1714A
PC140
E@4.7U/6.3V-8
VCC-VGA
E@2.2
PR44
PC71
E@.1U/50V-8
DH-VGA
LX-VGA
DL-VGA
HWPG
<29,34,35,36,37> HWPG
<29,33,35,36,37> MAINON
PL16
E@3R3UH
+1.2V
PC54
E@470U/2.5V
PC50
E@470U/2.5V
PC129
E@.1U/50V
PC45
E@10U/10V
PC175
E@10P_4
PQ56
E@SUD50N03
PD29
E@SKS30-04A
D: ADD PC175
PR57
E@15K
PR58
E@100K/F
1714REF-VGA
VCC-VGA
PR59
*0
PC79
E@1U/10V
PR54
E@100/F_4
PC74
E@2200P
PR51
E@2K/F
PR48
E@10K/F
PR250
*12.7K/F
+5V
PR251
*3.24K/F
PQ68
*2N7002E
PR252
*100
F: RESERVE PWR PLAY
PR51=2.2K; PR48=47K
HI=1.05V
LO=1.2V
PC177
*2.2U
VGA_PWR_SW <11>
PQ69
*DTC144EUA
5VPCU
PC41
E@10U/25V-T
PC32
E@.1U/50V
PR120
E@22
PU3
PD6
E@BAS316
VIN-VGACORE
PL4
VIN
PC22
E@.1U/50V
PC18
E@10U/25V-T
E@N20122PS800
PC26
E@4.7U/6.3V-8
VCC-1.8
E@2.2
PR16
PC20
E@.1U/50V-8
PQ5
E@SUD50N03-09P
DH-1.8
LX-1.8
DL-1.8
HWPG
MAINON
PL14
E@3R6UH
+1.8V
PC27
E@470U/2.5V
PC37
E@.1U/50V
PC35
E@10U/10V
PR19
E@34K/F
1714REF-1.8
VCC-1.8
PR119
*0
PR17
E@100K/F
PC33
E@1U/10V
PQ6
E@SUD50N03-09P
PD30
E@SKS30-04A
PR121
E@100/F_4
PC128
E@2200P
PR118
E@16K/F
PR116
E@20K/F
C: DEPOP WHEN INT. VGA
PROJECT : ZL2
Quanta Computer Inc.
Size
Document Number
+1.2V/+1.8V
Rev
F
Date: Tuesday, December 21, 2004
Sheet 38 of 41

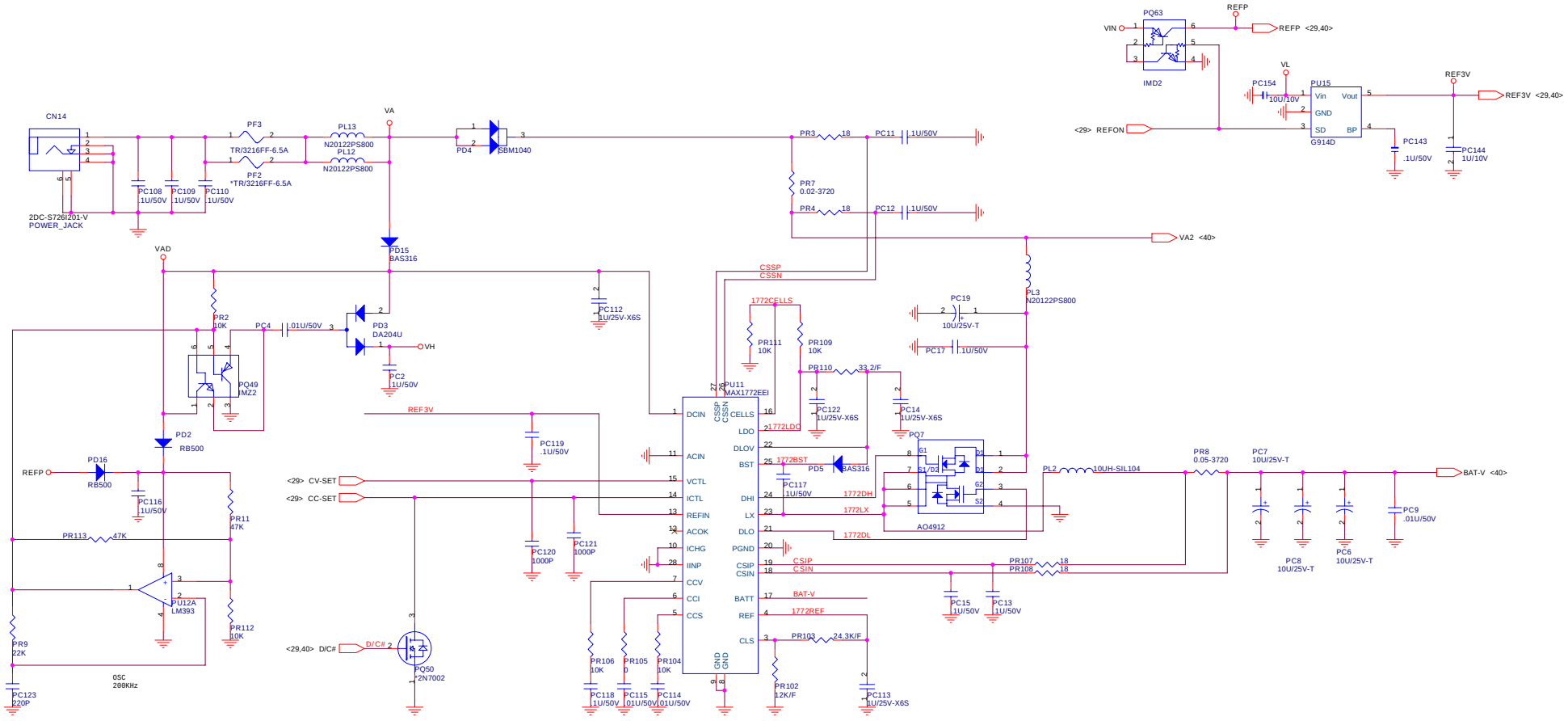

FOR 120W 6.2A

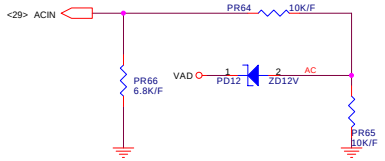

FOR 4S3P CELL-SET HIGH

FOR 3S3P CELL-SET LOW

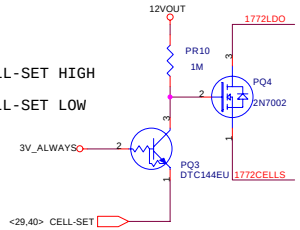

PROJECT : ZL2

Quanta Computer Inc.

Size	Document Number	Rev
	BATTERY CHARGER	F

Date: Tuesday, December 21, 2004 Sheet 39 of 41

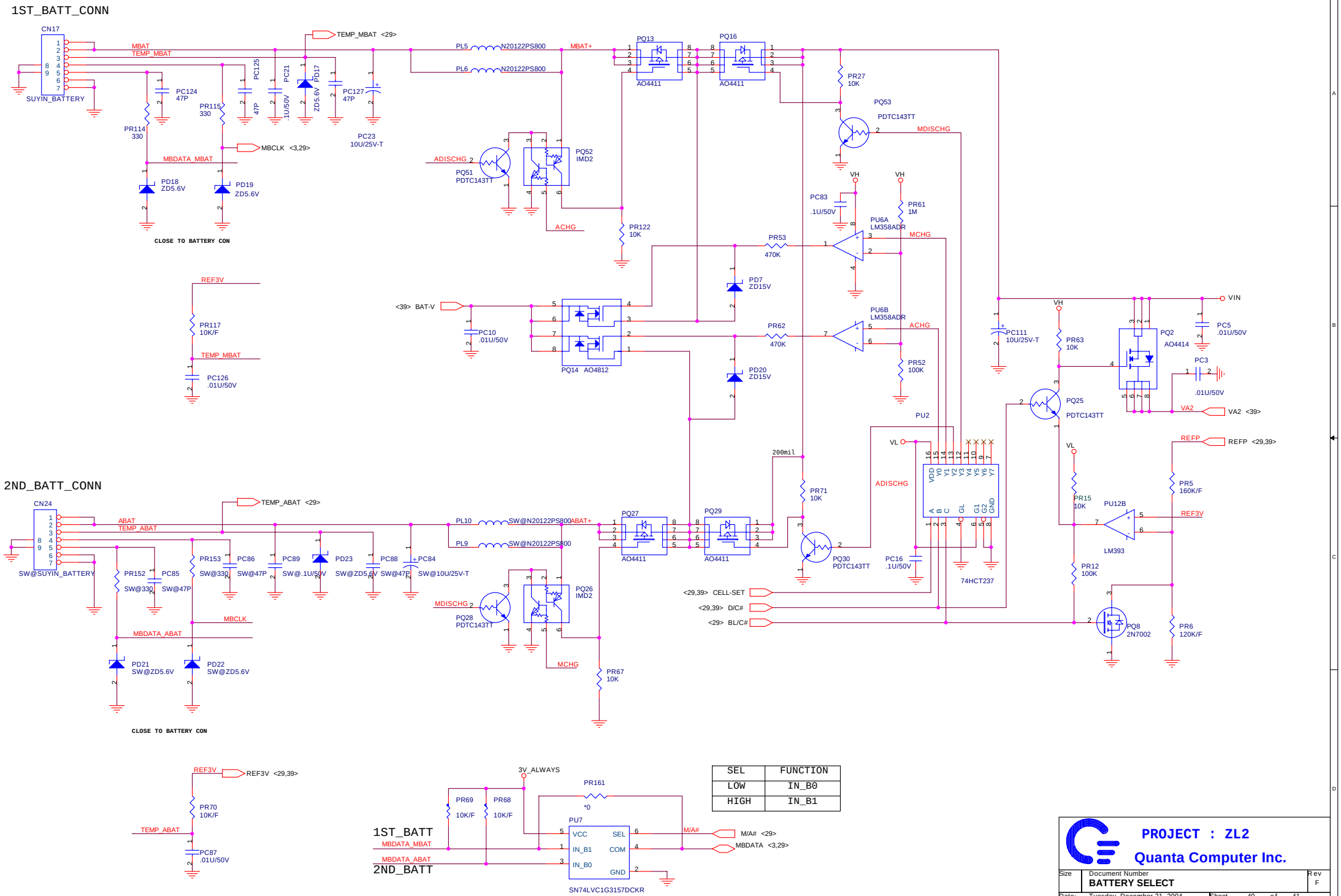

SEL	FUNCTION
LOW	IN_B0
HIGH	IN_B1

PROJECT : ZL2

Quanta Computer Inc.

Size	Document Number	Rev
	BATTERY SELECT	F

Date: Tuesday, December 21, 2004 Sheet 40 of 41

MODEL:	REV:	CHANGE LIST:	PAGE	FROM	TO
ZL2 MotherBoard	B	PAGE2 1. CHANGE FREQ. SETTINGS FOR DOTHANB 2. UNSTUFF SSC COMPONENTS 3. UNSTUFF COMPONENTS FOR DIFFERENT SKUS	1		
		PAGE3 1. REMOVE R449, PULL HIGH AT POWER SIDE 2. UNSTUFF ITP COMPONENTS 3. STUFF R441 FOR THEMTRIP#	2		
		PAGE4 1. STUFF R432, R433 FOR AUTO-SELECT	3		
		PAGE5 1. STUFF R162 FOR DOTHAN-B	4		
		PAGE6 1. STUFF R147, R148, R151, R143, R152, R159 ALWAYS 2. NOT STUFF DVO COMPONENTS WHEN NO DOCKING	5		
		PAGE8 1. NOT STUFF FILTER COMPONENTS WHEN EXT. VGA 2. CHANGE D10, D11 TO CH551	6		
		PAGE9 1. STUFF R76, PCIE_TESTIN PULL LOW 2. STUFF R369, GPIO0 PULL HIGH 3. CHANGE CLK OUTPUT TO XTALIN 4. NOT STUFF DVI COMPONENTS WHEN NO DOCKING	7		
		PAGE12 1. ADD 220UF IN VGA1.2V	8		
		PAGE15 1. NOT STUFF R60, R63 WHEN NO DVO DEVICE 2. NOT STUFF DVO COMPONENTS WHEN NO DOCKING	9		
		PAGE16 1. CHANGE TV-OUT LC VALUES	10		
		PAGE18 1. ADD DAMPING ON LFRAME# FOR AUDIO NOISE 2. STUFF R469 AND UNSTUFF R467 FOR DOTHAN-B 3. NOT STUFF COMPONENTS FOR SATA WHEN NO SATA 4. NOT STUFF AC TERMINATION FOR PCLK_ICH	11		
		PAGE19 1. NOT STUFF PCIE COMPONENTS WHEN NO PCIE DEVICES 2. CHANGE EMAIL LED GPIO 3. CHANGE MB_ID SETTING	12		
		PAGE21 1. REMOVE R50 2. CHANGE Q15 FROM BJT TO 2N7002	13		
		PAGE23 1. REMOVE RING FUNCTION 1. REMOVE 1394 CHOKE PADS	14		
		PAGE24 1. CHANGE 3IN1 CONNECTOR	15		
		PAGE25 1. CHANGE LED CONNECTION FOR 1G LAN 2. CORRECT U42 PIN.B11 PIN.C11 SHORT 3. CHANGE C741 AND C792'S SIZE FOR ME	16		
		PAGE26 1. UNINSTALL C210, C184, R87, R99 WHEN 10-100	17		
		PAGE27 1. INSERT 4700P IN BEEP SIGNALS 2. REMOVE SPK_PR FROM CODEC 3. CHANGE C863 TO 10U 4. REVERSE MIC-SELECT 5. CHANGE R272 TO 0 OHM	18		
		PAGE28 1. CHANGE CONNECTION FOR SPKL-R TO EZ4 2. ADD SPRINGS FOR MODEM CABLE	19		
		PAGE29 1. CHANGE PR_INSERT# TO PR_STS	20		
		PAGE30 1. CHANGE KB AND TP'S CONNECTOR 2. CHANGE LED CIRCUITS	21		
		PAGE31 1. REMOVE C889 2. STUFF AC TERMINATIONS FOR 14M_SIO	22		
		PAGE33 1. MODIFY EZ4 INTERFACE	23		
		PAGE 35 1. INCREASE CAPACITOR PC171 NEAR PR422. CHANGE COMPONENT PR38 SERIAL NUMBER FROM 0603 TO 1206 3. TAKE OFF PR39 PR43 PQ21 AND CHANGE NET NAME TO MAX6648_OV#	24		
		PAGE 35 3. INCREASE CAPACITOR C913 4. ADD DISCHARGE FOR VGA1.2V	25		
		PAGE 40 1. INCREASE RESISTOR PR161 NEAR PU7	26		
		PAGE 22 1. REMOVE CHOKE PADS	27		
		PAGE 39 1. TAKE OFF PQ50	28		
		PAGE 37 1. CHANGE PU8 NET NAME TO +2.5V	29		
		PAGE 17 1. CHANGE HSYNC& VSYNC'S BEADS TO 0 OHM	30		
	C	DA0ZL2MB8C3	31		
		PAGE2 1. ADD PULLUPS ON CLKREQ PINS	32		
		PAGE3 1. ADD THEMAL SHUTDOWN CIURCUITS	33		
		PAGE13 1. CHANGE OPTIONS TO HYNIX MEMORY	34		
		PAGE16 1. DEPOP C558	35		
		PAGE17 1. CHANGE LC VALUES FOR RGB			
		PAGE16, 17, 26 ADD 0 OHM RESISTORS TO SUBSTITUE SWITCHES WHEN NO DOCKING			
		PAGE25 1. CHANGE R531 TO 0 OHM 1. CHANGE R519 TO 1.2K/F			
		PAGE27 1. CHANGE C512, C511 TO .7UF 1. CHANGE R592 TO 100K			
		PAGE28 1. DEPOP Q28			
		PAGE29 1. CHANGE BATLED0,1# PINS TO IOPJ6,7			
		PAGE24 1. CHANGE 3-IN-1 CONNECTOR			
		PAGE 34 1. INCREASE CAPACITOR PC172 10U/25V IN VIN_1907A 2. INCREASE SCHOTTKY DIODE PD24 SKS30-04A IN MAX1907LX .			
		PAGE 35 1. INCREASE ZENER DIODE PD25 ZD5.6V SERIES WITH VIN1999 AND PR249 2. CHANGE NET NAME TO 1999_CHT#			
		PAGE 36 1. CHANGE MOSFET SUD50N03-09P TO PQ65 PQ66 2. INCREASE CAPACITOR PC173 560U/4V IN +2.5VSUS 3. INCREASE CAPACITOR PC174 10U/10V IN +1.25VSUS 4. INSERT PR250 BETWEEN PU16 PIN2 AND PIN 5 .			
		PAGE 37 1. CHANGE MOSFET SUD50N03-09P TO PQ34 PQ47 AND PQ35 2. TAKE OFF JUMP 3.CHANGE CAPACITOR PC155 PC146 TO 560U/4V			
		PAGE 38 1. CHANGE MOSFET SUD50N03-09P TO PQ5 PQ6 PQ55 AND PQ56 2. TAKE OFF JUMP 3. CHANGE CHOKE PL16 TO 3R3UH 4.CHANGE CAPACITOR PC27 TO E@470U/2.5V			
		PAGE 39 1. EXCHANGE NET NAME 3V_ALWAYS AND CELL-SET			
		PAGE 23,25,29,31 1. DEPOP RC FILTERS ON PCI CLOCKS			
	D	PAGE2 1. DEPOP R615 2. ADD 47P ON 14M_SIO			
		PAGE3 1. POP R449			
		PAGE6 1. DEPOP RP7			
		PAGE16 1. LID SW FOOTPRINT CHANGED			
		PAGE19 1. ADD MB_ID3			
		PAGE21 1. CHANGE C82'S RATING TO 25V			
		PAGE28 1. PHONE JACK CHANGED TO SPDIF			
		PAGE30 1. CHANGE R338 TO 100K			
		PAGE31 1. CHANGE R28 AND C41'S VALUE			
		PAGE33 1. ADD EMI CAPS			
		PAGE34 1. ADD CAP PC176			
		PAGE35 1. CHANGE CAP PC69 COMPONENT 2. CHANGE CAP PC72 CONNECT POINT 3. CHANGE RESISTOR PR147 COMPONENT			
	E	PAGE2 Change R200, R202, C915 value to pass EA			
		PAGE3,30 DEPOP COMPONENTS FOR MAX6648_OV#			
		PAGE6 1. DEPOP R186, R184			
		PAGE8 Add C918 to solve TV issue			
		PAGE12 Add C919,920, change L25,27,67			
		PAGE16 1. ADD LEVEL SHIFT FOR EDID			
		PAGE16 Change R8, R9, remove C9, C32 for pass Acer LCD			
		PAGE19 ADD 100K PULLLOW ON DPRSLPVR, change C428			
		PAGE21 1. CHANGE SWAP-ODD RESET			
		PAGE23 1. ADD PULL-LOW ON PCMSPK			
		PAGE24 1. ADD 33OHM CURRENT LIMIT ON VCC_XD			
		PAGE32 1. REVERSE RX AND TX			
		PAGE18 Change GPIO pin define, add R645			
		PAGE20 D25 change to CH551			
		PAGE31 Change C41 to 6pF			
		PAGE33 Modify EZ4 pin define, add R641, 642, 644 for EMI			
		PAGE 35 1. CHANGE PC68 COMPONENT.			
		PAGE 36 1. CHANGE PR99 PD28 COMPONENT.			
		PAGE 37 1. CHANGE PD26 PD27 COMPONENT. 2. CHANGE PR74 PR77 PU8 PC147 PC150 COMPONENT.			
		PAGE 38 1. CHANGE PR51 COMPONENT. 2. CHANGE PD29 PD30 COMPONENT.			
		PAGE 39 1. CHANGE PQ7 COMPONENT.			

PROJECT : ZL2

Quanta Computer Inc.

PROJECT : ZL2	APPROVE BY: SELMON LIU	DRAWING BY:JOE LIN	REV
MB ASSY'S P/N : 31ZL1MB0004	PROJECT LEADER: SELMON LIU	DOCUMENT NO:	DATE :2004/06/01

COVER SHEET 1 OF 1

Size	Document Number	Rev
	CHANGE LIST	F

Date: Tuesday, December 21, 2004 Sheet 41 of 41