01 Block Diagram
02 System Setting
03 *
04 04_CPU-Merom(HOST)
05 05_CPU-Merom(PWR)
06 *
07 07_CRESTLINE(HOST)
08 08_CRESTLINE(DMI & CFG)
09 09_CRESTLINE(GRAPHIC)
10 10_CRESTLINE(DDR2)
11 11_CRESTLINE(PWR)
12 12_CRESTLINE(PWR2)
13 13_CRESTLINE(GND)
14 *
15 15_SB-ICH8M(1)
16 16_SB-ICH8M(2)
17 17_SB-ICH8M(3)
18 18_SB-ICH8M(PWR)
19 *
20 20_DDR2 SO-DIMM0
21 21_DDR2 SO-DIMM1
22 22_DDR2 TERMINATION
23 *
24 G86M(1)-PCIE
25 G86M(2)-Memory IF
26 G86M(3)-FBA_VRAM_A
27 G86M(4)-FBA_VRAM_C
28 G86M(5)-GND&Decoupling
29 G86M((6)-LVDS&VGA&TV
30 G86(7)-MIOBD&GPIO
31 G86(8)-SSC
32 CRT
33 LVDS & INVERTER CONNECTOR
34 FINGER PRINT
35 TV OUT CONN & DVI
36 *
37 THER SENSOR & FAN
38 *
39 CLOCK GEN-ICS9LPR363AGLF-T
40 *
41 Power on & Reset Freq.
42 DISCHARGE
43 *
44 LAN-L1
45 MDC & RJ45+11
46 *
47 MINI CARD-TV/Windigo
48 MINI CARD-Robson
49 MINI CARD-Kedron
50 *
51 CARD1394-R5C833(1)
52 CARD1394-R5C833(2)
53 4 in 1 CARD READER
54 NEWCARD
55 *
56 CODEC-ALC660
57 AUDIO AMP & JCAK
58 *
59 IT8511TE
60 Touch Pad & KB
61 *
62 USB CONN
63 *
64 ISA ROM
65 *
66 LED
67 *
68 DC & BAT IN
69 *
70 Debug CONN.
71 *
72 SATA-HDD & ODD
73 eSATA
74 SREW HOLE
75 *
76 TPM
77 SPRING_PAD
78 BT
79 POWER SEQUENCE
80 POWER_VCORE
81 POWER_SYSTEM
82 POWER_I/O_1.5VS & 1.05VS
83 POWER_I/O_DDR & VTT
84 POWER_I/O_+3VAO & +2.5VS
85 POWER_VGA_CORE & +1.25VS
86 POWER_+VCCFGX (Empty)
87 POWER_SHUTDOWN# (Empty)
88 POWER_CHARGER
89 POWER_PIC(Empty)
90 POWER_DETECT
91 POWER_LOAD SWITCH
92 POWER_FLOWCHART
93 POWER_PROTECT
94 POWER_SIGNAL
95 History

F3Sv/c

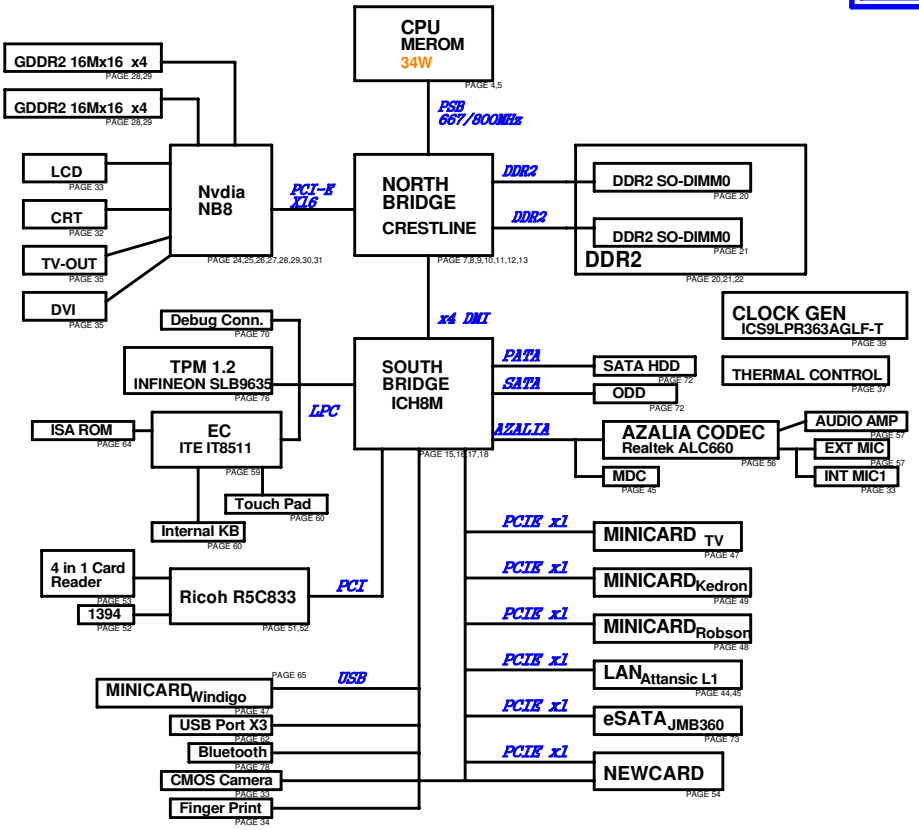

<Variant Name>

ASUS	Title : Block Diagram		
ASUSTek Computer INC. NB1	Engineer: Gajun_Ho		
Size: Custom	Project Name: F3Sc		Rev: 2.0
Date: 星期三, 三月 21, 2007	Sheet 1 of 95		

GPIO9

EC_IT8511TE SETTING

Pin	Pin Name	Signal Name	Type
32	PWM0/GPA0	/	
33	PWM1/GPA1	FAN_PWM	O
36	PWM2/GPA2	/	
37	PWM3/GPA3	/	
38	PWM4/GPA4	CHG_LED_UP#	O
39	PWM5/GPA5	PWR_LED_UP#	O
40	PWM6/GPA6	/	
43	PWM7/GPA7	LCD_BACKOFF#	O
153	RXD/GPB0	NUM_LED	O
154	TXD/GPB1	CAP_LED	O
162	GPB2	SCRL_LED	O
163	SMCLK0/GPB3	SMB0_CLK	I/0
164	SMDAT0GPB4	SMB0_DAT	I/0
5	GA20/GPB5	A20GATE	O
6	KBRST#/GPB6	RC_IN#	O
165	GPB7	THRO_CPU	O
47	CLKOUT/GPC0	DJ_SW#	O
169	SMCLK1/GPC1	SMB1_CLK	I/0
170	SMDAT1/GPC2	SMB1_DAT	I/0
171	GPC3	/	
172	TMRI0/WUI2/GPC4	ACIN_OC#	I
175	GPC5	OP_SD#	O
176	TMRI1/WUI3/GPC6	BAT1_IN_OC#	I
1	CK32KOUT/GPC7	/	
26	RI1#/WUI0/GPD0	SUSB#	I
29	RI2#/WUI1/GPD1	SUSC#	I
30	LPCRST#/WUI4//GPD2	BUF_PLT_RST#	I
31	ECSCI#/GPD3	EXT_SCI#	O
41	GPD4	RF_ON_SW#	I
42	GINT/GPD5	PM_SLP_M#	I
62	TACH0/GPD6	FAN0_TACH	I
63	TACH1/GPD7	COLOREN#	O
87	ADC4/GPE0	BT#	I
88	ADC5/GPE1	INTERNET#	I
89	ADC6/GPE2	MARATHON#	I
90	ADC7/GPE3	DISTP#	I
2	PWRSW/GPE4	PWR_SW#	I
44	WUI5/GPE5	/	
24	LPCPD#/WUI6/GPE6	/	
25	CLKRUN#/WUI7/GPE7	PM_CLKRUN#	O
110	PS2CLK0/GPF0	/	
111	PS2DAT0/GPF1	/	
114	PS2CLK1/GPF2	/	I/0
115	PS2DAT1/GPF3	/	I/0
116	PS2CLK2/GPF4	TP_CLK	
117	PS2DAT2/GPF5	TP_DAT	
118	PS2CLK3/GPF6	/	
119	PS2DAT3/GPF7	INSTANT_ON#	I
113	FA16/GPG0	FA16	
112	FA17/GPG1	FA17	
104	FA18/GPG2	FA18	
103	FA19/GPG3	FA19	
3	FA20/GPG4	LIDSW#	I
4	FA21/GPG5	/	
27	LPC80HL/GPG6	PMTHERM#	O
28	LPC80HL/GPG7	AC_APR_UC#	I

Pin	Pin Name	Signal Name	Type
8	GPL0	PM_S4_STATE#	I
11	GPL1	/	
12	GPL2	/	
20	GPL3	/	
21	GPL4	/	
48	GPH0	VSUS_ON	I
54	GPH1	SUS_PWRGD	O
55	GPH2	VRM_PWRGD	O
69	GPH3	PM_PWRBTN#	O
70	GPH4	SUSC_EC#	O
75	GPH5	/	O
76	GPH6	CPU_VRON	O
105	GPH7	PM_RSMRST#	O
148	GPI0	PM_PWROK	O
149	GPI1	ALL_SYSTEM_PWRGD	I

Pin	Pin Name	Signal Name	Type
152	GPI2	/	
155	GPI3	CHG_EN#	O
168	GPI5	EC_CLK_EN	O
174	GPI6	BAT_LEARN	O
85	KS016/GPM2	/	O
106	GPL5	3G_ON#	
107	GPL6	/	O
108	GPL7	SUSB_EC1#	I
97	GPJ4	CPPE#_EC	I
98	GPJ5	PS_SHDN#	O

PCI Device	IDSEL#	REQ/GNT#	Interrupts
CARD READER	AD17	0	A
1394	AD17	0	B

PCIE Device	Bus	PCIE Device	Bus
LAN	PE(T/R)(p/n)1	Robson	PE(T/R)(p/n)4
Kedron	PE(T/R)(p/n)2	NEWCARD	PE(T/R)(p/n)5
eSATA	PE(T/R)(p/n)3	GLAN	PE(T/R)(p/n)6

SM-Bus Device	SM-Bus Address
Clock Generator	1101001x (D2)
SO-DIMM 0	1010000x (A0)
SO-DIMM 1	1010001x (A2)
CPU Thermal Sensor(MAX6657)	0100110x (4C)
VGA Thermal Sensor(MAX6649)	0100110x (4C)

ICH8-M GPIO SETTING

Pin	Pin Name	Signal Name	Type
AG12	GPIO00/BM_BUSY#	PM_BMBUSY#	I
AJ8	GPIO1/TACH1	BT_DET#	I
F8	GPIO2/PIRQE#	PCI_INTE#	I
G11	GPIO3/PIRQF#	PCI_INTF#	I
F12	GPIO4/PIRQG#	PCI_INTG#	I
B3	GPIO5/PIRQH#	PCI_INTH#	I
AJ9	GPIO6/TACH2	BIOS_REC	I/O
AH9	GPIO7/TACH3	WLAN_LED_EN	I
AE16	GPIO8	EXT_SMI#	I
AG19	GPIO9/WOL_EN	GPIO9	I
AJ24	GPIO10/CLGPIO1	/	
AG22	GPIO11/SMBALERT#	SMB_ALERT#	I
AC19	GPIO12	KBC_SCI#	I
AH21	GPIO13/GLAN_DOCK#	/	
AF22	GPIO14/CLGPIO2	/	
AE20	GPIO15/STP_PCI#	STP_PCI#	I/O
AJ14	GPIO16/DPRSLPVR	PM_DPRSLPVR	O
AG8	GPIO17/TACH0	WLAN_ON#	O
AH12	GPIO18	/	
AJ10	GPIO19/SATA1GP	GPO19	O
AE11	GPIO20	BTLED_ON	O
AJ12	GPIO21/SATA0GP	CPU_Select	I
AG10	GPIO22/SCLOCK	/	
E6	GPIO23/LDRQ1#	LPC_DRQ#1	I/O
AJ27	GPIO24/CLGPIO0	/	
AG18	GPIO25/STP_CPU#	STP_CPU#	O
AH27	GPIO26/S4_STATE#	PM_S4_STATE#	O
AH25	GPIO27/QRT_STATE0	BT_ON#	O
AD16	GPIO28/QRT_STATE1	CB_SD#	O
AG17	GPIO29/OC#5	USB_OC#5	I
AD12	GPIO30/OC#6	NEWCARD_OC#	I
AJ18	GPIO31/OC#7	USB_OC#7	I
AH11	GPIO32/CLKRUN#	PM_CLKRUN#	O
AE10	GPIO33/AZ_DOCK_EN#		O
AG14	GPIO34/AZ_DOCK_RST#		
AG13	GPIO35/SATACLKREQ#	GPO35	O
AF11	GPIO36/SATA2GP	GPO36	O
AG11	GPIO37/SATA3GP	PCB_ID0	I
AF9	GPIO38/SLOAD	PCB_ID1	I
AJ11	GPIO39/SDATAOUT0	PCB_ID2	I
AD10	GPIO48/SDATAOUT1	/	
AG29	GPIO49/CPUPWRGD	H_PWRGD	O

Pin	Pin Name	Signal Name	Type
AG16	GPIO40/OC#1	USB_CON_OC01#	I
AG15	GPIO41/OC#2	USB_CON_OC2#	I
AE15	GPIO42/OC#3	USB_CON_OC3#	I
AF15	GPIO43/OC#4	USB_CON_OC4#	I
E18	GPIO50/REQ1#	PCI_REQ#1	
C18	GPIO51/GNT1#	PCI_GNT#1	
B19	GPIO52/REQ2#	PCI_REQ#2	
F18	GPIO53/GNT2#	PCI_GNT#2	
A11	GPIO54/REQ3#	PCI_REQ#3	
C10	GPIO55/GNT3#	PCI_GNT#3	

ICS9LPR363AGLF-T SETTING

Pins	Pin Name	Device
3	PCICLK1	TPMPCI
4	PCICLK2	CardBus R5C833
5	SELPCIEX0_LCD#PCICLK3	EC IT8511E
8	ITP_EN/PCICLK_F0	ICH8
15	DOTC_96MHzL	MiniCard
14	DOTT_96MHzL	MiniCard
12	FSLA/USB_48MHz	ICH8
19	PCIeT_L1	MCH
20	PCIeC_L1	MCH
36	PCIeT_L5	NB8P
35	PCIeC_L5	NB8P
39	PCIeT_L6	MiniCard(Rob)
38	PCIeC_L6	MiniCard(Rob)
22	PCIeT_L2	ICH8
23	PCIeC_L2	ICH8
24	PCIeT_L3	MiniCard
25	PCIeC_L3	MiniCard
26	SATACLKT_L	ICH8
27	SATACLKC_L	ICH8
44	CPUITPT_L2 / PCIeT_L8	LAN
43	CPUITPC_L2 / PCIeC_L8	LAN
14	27FIX/LCD_SSCGT/PCIeT_L0	M66M
15	DOTC_96MHzL	M66M
41	PEREQ1# / PCIeT_L7	ESATA
40	PEREQ2# / PCIeC_L7	ESATA
32	PEREQ3#	NewCard
33	PEREQ4#	MiniCard
30	PCIeT_L4	NewCard
31	PCIeC_L4	NewCard
49	CPUT_L1F	MCH
48	CPUC_L1F	MCH
52	CPUT_L0	CPU
51	CPUC_L0	CPU
57	X2	14.318MHz
58	X1	14.318MHz
60	REF0	ICH8
61	REF1/SSCDITEST_SEL	X

<Variant Name>

ASUSTeK COMPUTER INC	Title : Schematic page name		
	Engineer: Gajun_Ho		
Size: Custom	Project Name: F3Sc		Rev: 2.0
Date: 星期三, 三月 21, 2007	Sheet 3 of 95		

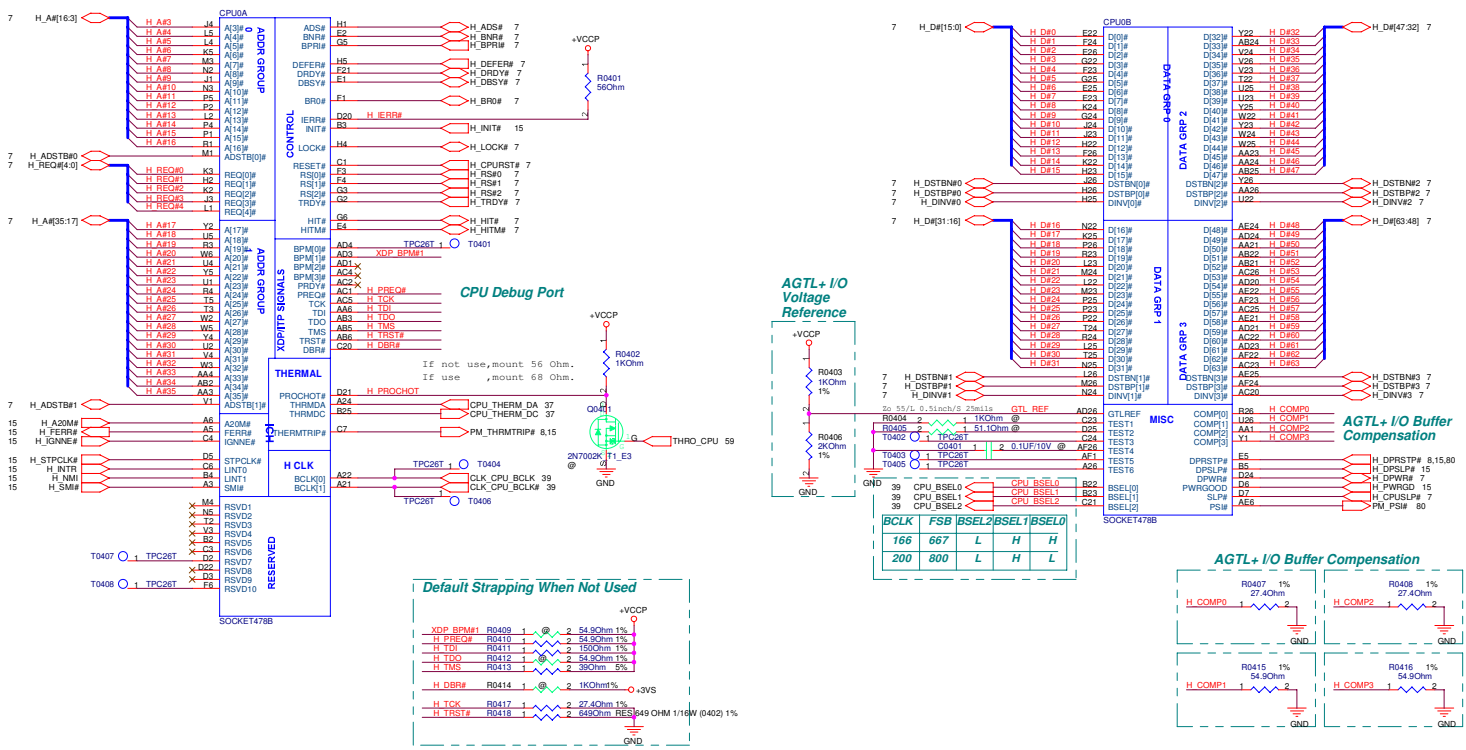

BCLK	FSB	BSEL2	BSEL1	BSEL0
166	667	L	H	H
200	800	L	H	L

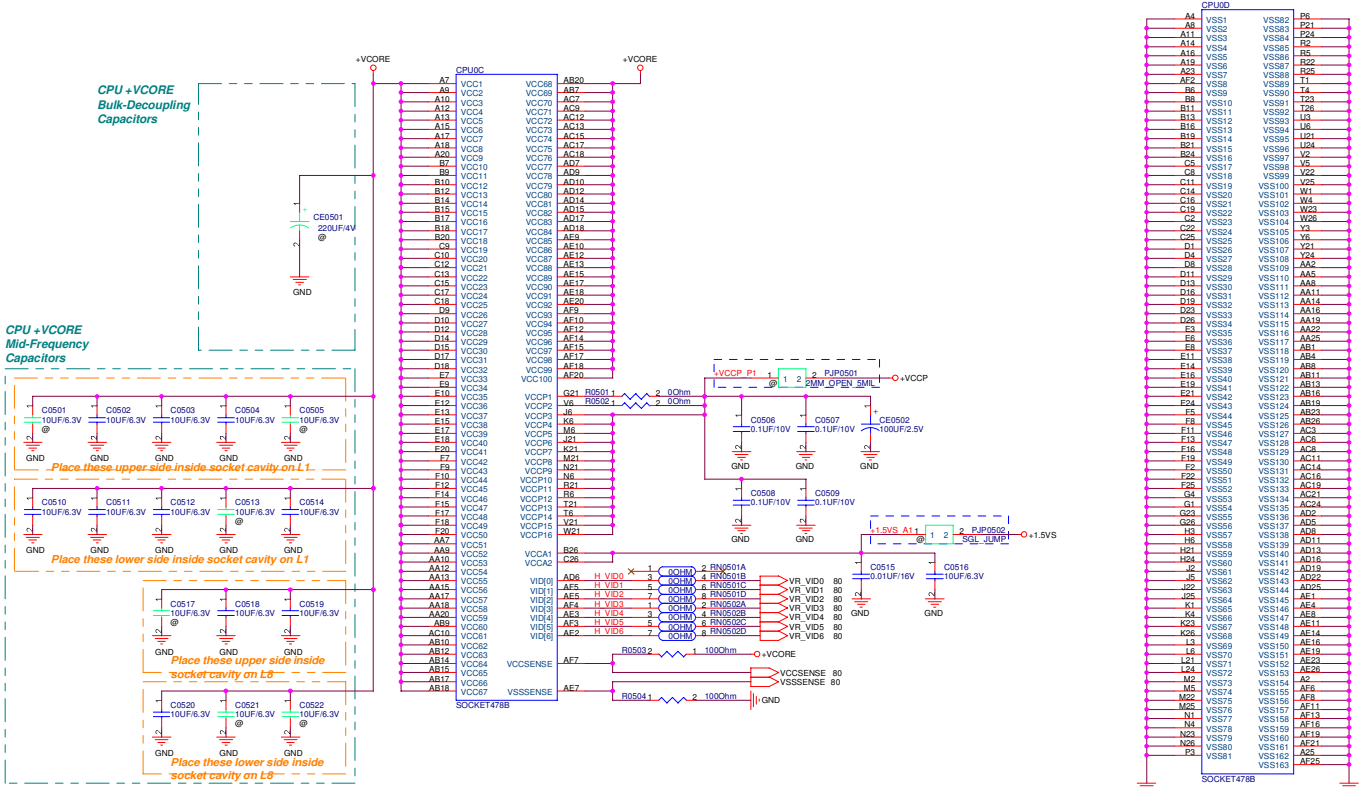

+VCORE Mid-Frequency Capacitor
*Intel: 22UF *32*
*F3S: 10UF *16*
+VCCP Decoupling Capacitor
*Intel: 270UF *1, 0.1UF *6*
*F3S: 100UF *1, 0.1UF *4*

<Variant Name>

ASUSTeK COMPUTER INC. NB1	Title : CPU-Merom(PWR)		
	Engineer: Gajun_Ho		
Size: Custom	Project Name: F3Sc		Rev: 2.0
Date: 星期三, 三月 21, 2007	Sheet 5 of 95		

<Variant Name>

ASUSTeK COMPUTER INC	Title : Schematic page name		
	Engineer: Gajun_Ho		
Size: Custom	Project Name: F3Sc		Rev: 2.0
Date: 星期三, 三月 21, 2007	Sheet 6 of 95		

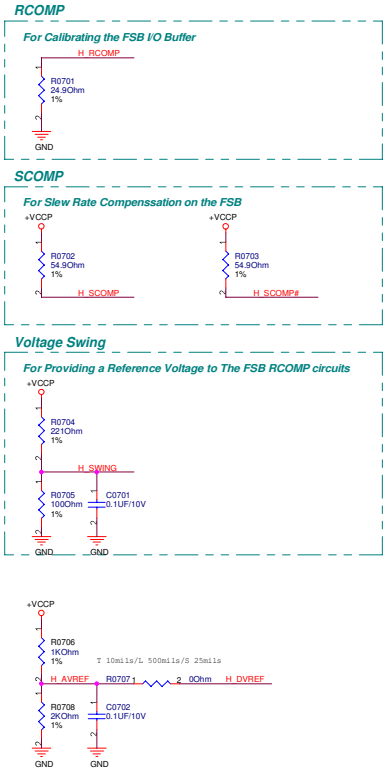

<Variant Name>

ASUSTeK COMPUTER INC. NB1	Title : NB-965PM(HOST)		
	Engineer: Gajun_Ho		
Size: Custom	Project Name: F3Sc		Rev: 2.0
Date: 星期三, 二月 21, 2007	Sheet 7 of 95		

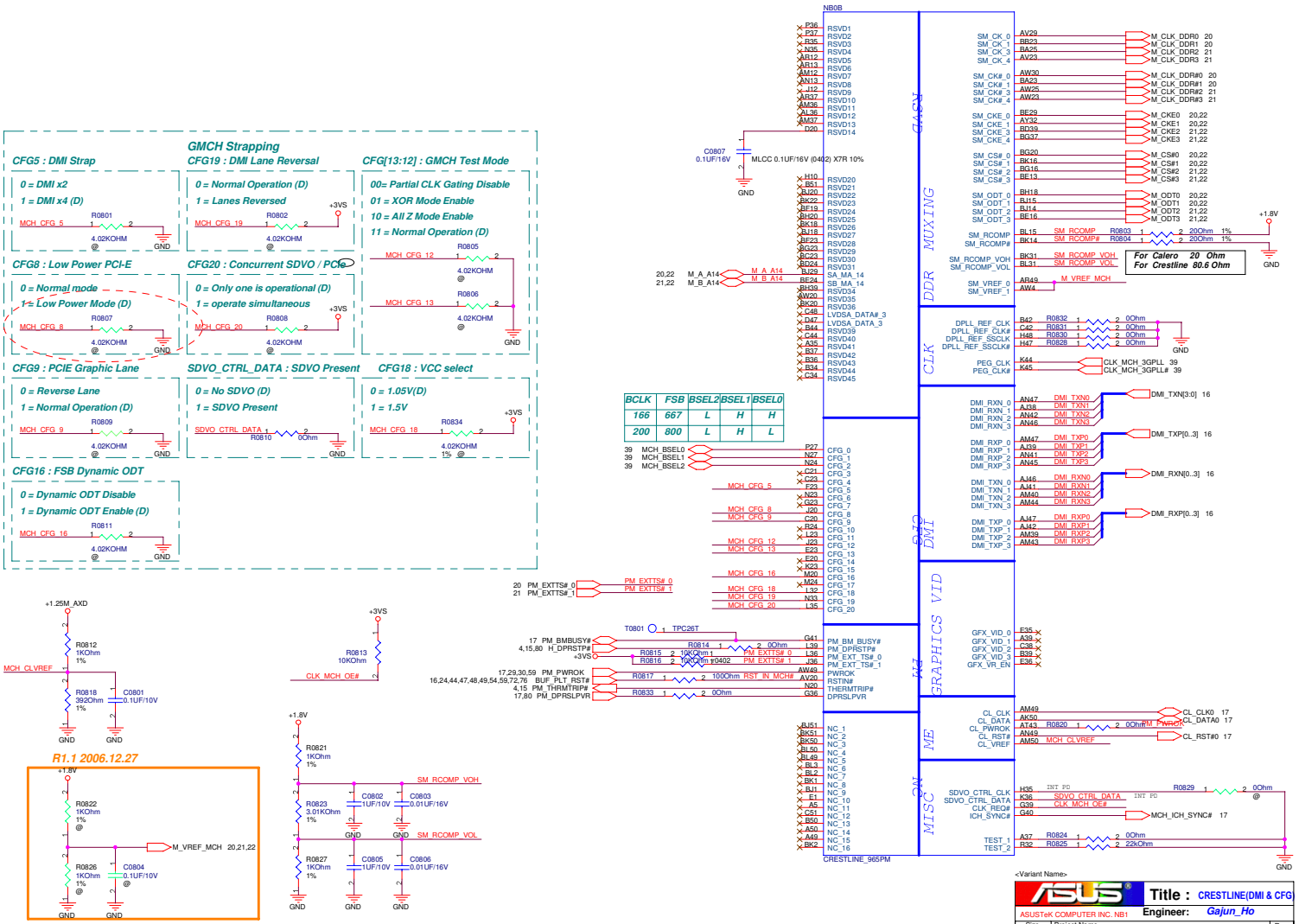
GMCH Strapping
CFG5 : DMI Strap
0 = DMI x2
1 = DMI x4 (D)
R0801
MCH_CFG_5
4.02KOHM
CFG19 : DMI Lane Reversal
0 = Normal Operation (D)
1 = Lanes Reversed
R0802
MCH_CFG_19
4.02KOHM
+3VS
CFG[13:12] : GMCH Test Mode
00= Partial CLK Gating Disable
01 = XOR Mode Enable
10 = All Z Mode Enable
11 = Normal Operation (D)
MCH_CFG_12
R0805
4.02KOHM
MCH_CFG_13
R0806
4.02KOHM
CFG8 : Low Power PCI-E
0 = Normal mode
1 = Low Power Mode (D)
R0807
MCH_CFG_8
4.02KOHM
CFG20 : Concurrent SDVO / PCI-E
0 = Only one is operational (D)
1 = operate simultaneous
R0808
MCH_CFG_20
4.02KOHM
CFG9 : PCIE Graphic Lane
0 = Reverse Lane
1 = Normal Operation (D)
R0809
MCH_CFG_9
4.02KOHM
SDVO_CTRL_DATA : SDVO Present
0 = No SDVO (D)
1 = SDVO Present
SDVO_CTRL_DATA
R0810
0Ohm
CFG18 : VCC select
0 = 1.05V(D)
1 = 1.5V
R0834
MCH_CFG_18
4.02KOHM
1%
CFG16 : FSB Dynamic ODT
0 = Dynamic ODT Disable
1 = Dynamic ODT Enable (D)
R0811
MCH_CFG_16
4.02KOHM
GND
NB0B
C0807
0.1UF/16V
MLCC 0.1UF/16V (0402) X7R 10%
RSVD1
RSVD2
RSVD3
RSVD4
RSVD5
RSVD6
RSVD7
RSVD8
RSVD9
RSVD10
RSVD11
RSVD12
RSVD13
RSVD14
RSVD20
RSVD21
RSVD22
RSVD23
RSVD24
RSVD25
RSVD26
RSVD27
RSVD28
RSVD29
RSVD30
RSVD31
SA_MA_14
SB_MA_14
RSVD34
RSVD35
RSVD36
LVDSA_DATA#_3
LVDSA_DATA_3
RSVD39
RSVD40
RSVD41
RSVD42
RSVD43
RSVD44
RSVD45
M_A_A14
M_B_A14
CFG_0
CFG_1
CFG_2
CFG_3
CFG_4
CFG_5
CFG_6
CFG_7
CFG_8
CFG_9
CFG_10
CFG_11
CFG_12
CFG_13
CFG_14
CFG_15
CFG_16
CFG_17
CFG_18
CFG_19
CFG_20
PM_EXTTS#_0
PM_EXTTS#_1
PM_BM_BUSY#
PM_DPRSTP#
PM_EXT_TS#_0
PM_EXT_TS#_1
PWROK
RSTIN#
THERMTRIP#
DPRSLPVR
NC_1
NC_2
NC_3
NC_4
NC_5
NC_6
NC_7
NC_8
NC_9
NC_10
NC_11
NC_12
NC_13
NC_14
NC_15
NC_16
CRESTLINE_965PM
DDR MUXING
SM_CK_0
SM_CK_1
SM_CK_3
SM_CK_4
SM_CK#_0
SM_CK#_1
SM_CK#_3
SM_CK#_4
SM_CKE_0
SM_CKE_1
SM_CKE_3
SM_CKE_4
SM_CS#_0
SM_CS#_1
SM_CS#_2
SM_CS#_3
SM_ODT_0
SM_ODT_1
SM_ODT_2
SM_ODT_3
SM_RCOMP
SM_RCOMP#
SM_RCOMP_VOH
SM_RCOMP_VOL
SM_VREF_0
SM_VREF_1
M_CLK_DDR0
M_CLK_DDR1
M_CLK_DDR2
M_CLK_DDR3
M_CLK_DDR#0
M_CLK_DDR#1
M_CLK_DDR#2
M_CLK_DDR#3
M_CKE0
M_CKE1
M_CKE2
M_CKE3
M_CS#0
M_CS#1
M_CS#2
M_CS#3
M_ODT0
M_ODT1
M_ODT2
M_ODT3
R0803
R0804
200Ohm
1%
+1.8V
For Calero 20 Ohm
For Crestline 80.6 Ohm
M_VREF_MCH
CLK
DPLL_REF_CLK
DPLL_REF_CLK#
DPLL_REF_SSCLK
DPLL_REF_SSCLK#
R0832
R0831
R0830
R0828
0Ohm
PEG_CLK
PEG_CLK#
CLK_MCH_3GPLL
CLK_MCH_3GPLL#
DMI/DVO
DMI_RXN_0
DMI_RXN_1
DMI_RXN_2
DMI_RXN_3
DMI_RXP_0
DMI_RXP_1
DMI_RXP_2
DMI_RXP_3
DMI_TXN_0
DMI_TXN_1
DMI_TXN_2
DMI_TXN_3
DMI_TXP_0
DMI_TXP_1
DMI_TXP_2
DMI_TXP_3
DMI_TXN[3:0]
DMI_TXP[0..3]
DMI_RXN[0..3]
DMI_RXP[0..3]
GRAPHICS VID
GFX_VID_0
GFX_VID_1
GFX_VID_2
GFX_VID_3
GFX_VR_EN
CL_CLK
CL_DATA
CL_PWROK
CL_RST#
CL_VREF
CL_CLK0
CL_DATA0
CL_RST#0
R0820
0Ohm
PM_PWROK
MISC
SDVO_CTRL_CLK
SDVO_CTRL_DATA
CLK_REQ#
ICH_SYNC#
INT_PD
SDVO_CTRL_DATA
CLK_MCH_OE#
MCH_ICH_SYNC#
R0829
TEST_1
TEST_2
R0824
R0825
22kOhm
BCLK
FSB
BSEL2
BSEL1
BSEL0
166
667
L
H
166
800
L
H
L
MCH_BSEL0
MCH_BSEL1
MCH_BSEL2
T0801
TPC26T
PM_BMBUSY#
H_DPRSTP#
R0814
R0815
R0816
10KOhm
R0817
100Ohm
RST_IN_MCH#
R0833
0Ohm
+3VS
+1.25M_AXD
R0812
1KOhm
1%
MCH_CLVREF
R0818
392Ohm
1%
C0801
0.1UF/10V
R0813
10KOhm
CLK_MCH_OE#
R1.1 2006.12.27
R0822
1KOhm
1%
M_VREF_MCH
R0826
1KOhm
1%
C0804
0.1UF/10V
R0821
1KOhm
1%
SM_RCOMP_VOH
R0823
3.01KOhm
1%
C0802
1UF/10V
C0803
0.01UF/16V
SM_RCOMP_VOL
R0827
1KOhm
1%
C0805
1UF/10V
C0806
0.01UF/16V
GND
<Variant Name>
Title : CRESTLINE(DMI & CFG)
ASUSTeK COMPUTER INC. NB1
Engineer: Gajun_Ho
Size
Custom
Project Name
F3Sc
Rev
2.0
Date: 星期二, 二月 21, 2007
Sheet 8 of 95

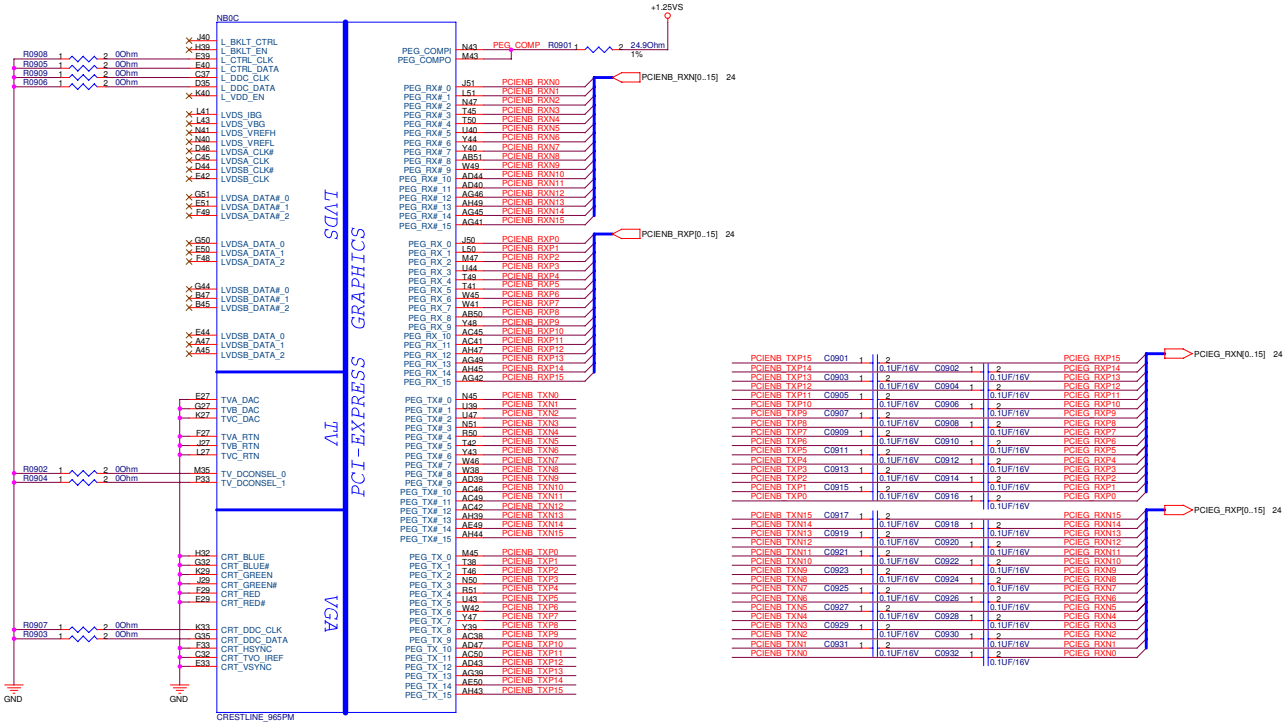
NB0C
LVDS
TV
VGA
PCI-EXPRESS GRAPHICS
CRESTLINE_965PM
+1.25VS
PEG_COMP 24.9Ohm 1%
PCIENB_RXN[0..15] 24
PCIENB_RXP[0..15] 24
PCIEG_RXN[0..15] 24
PCIEG_RXP[0..15] 24
GND

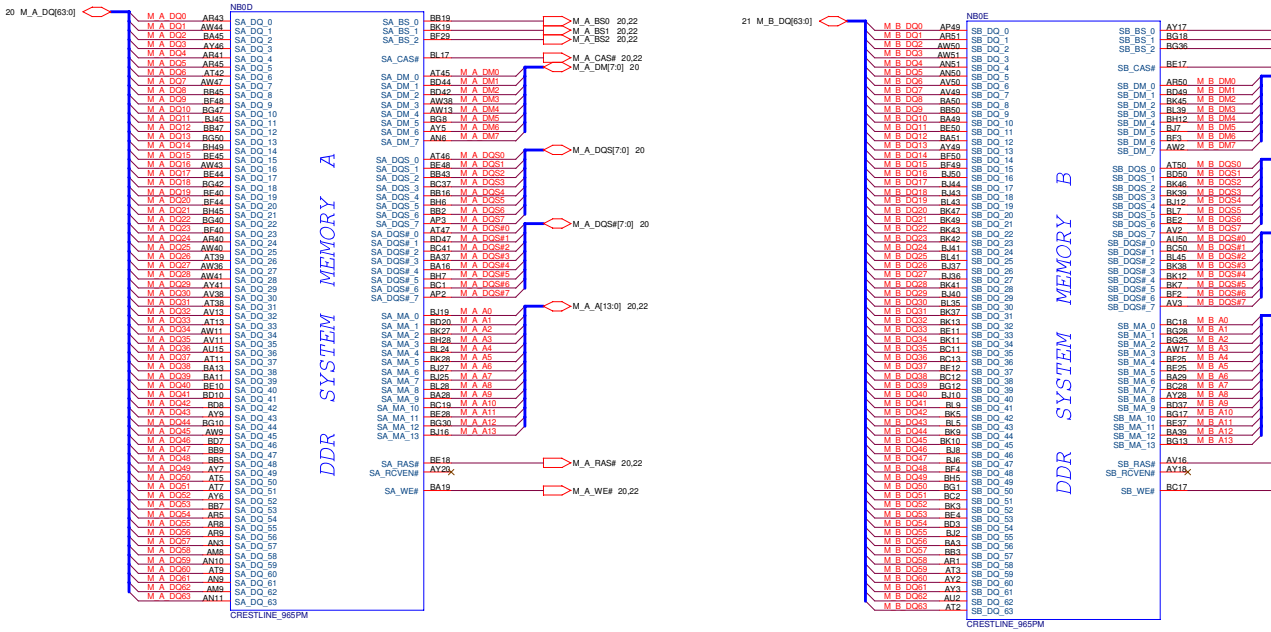

<Variant Name>

ASUSTeK COMPUTER INC. NB1	Title : NB-965PM(DDR2)	
	Engineer: Gajun_Ho	
Size: Custom	Project Name: F3Sc	Rev: 2.0
Date: 星期一, 三月 21, 2007	Sheet 10 of 95	

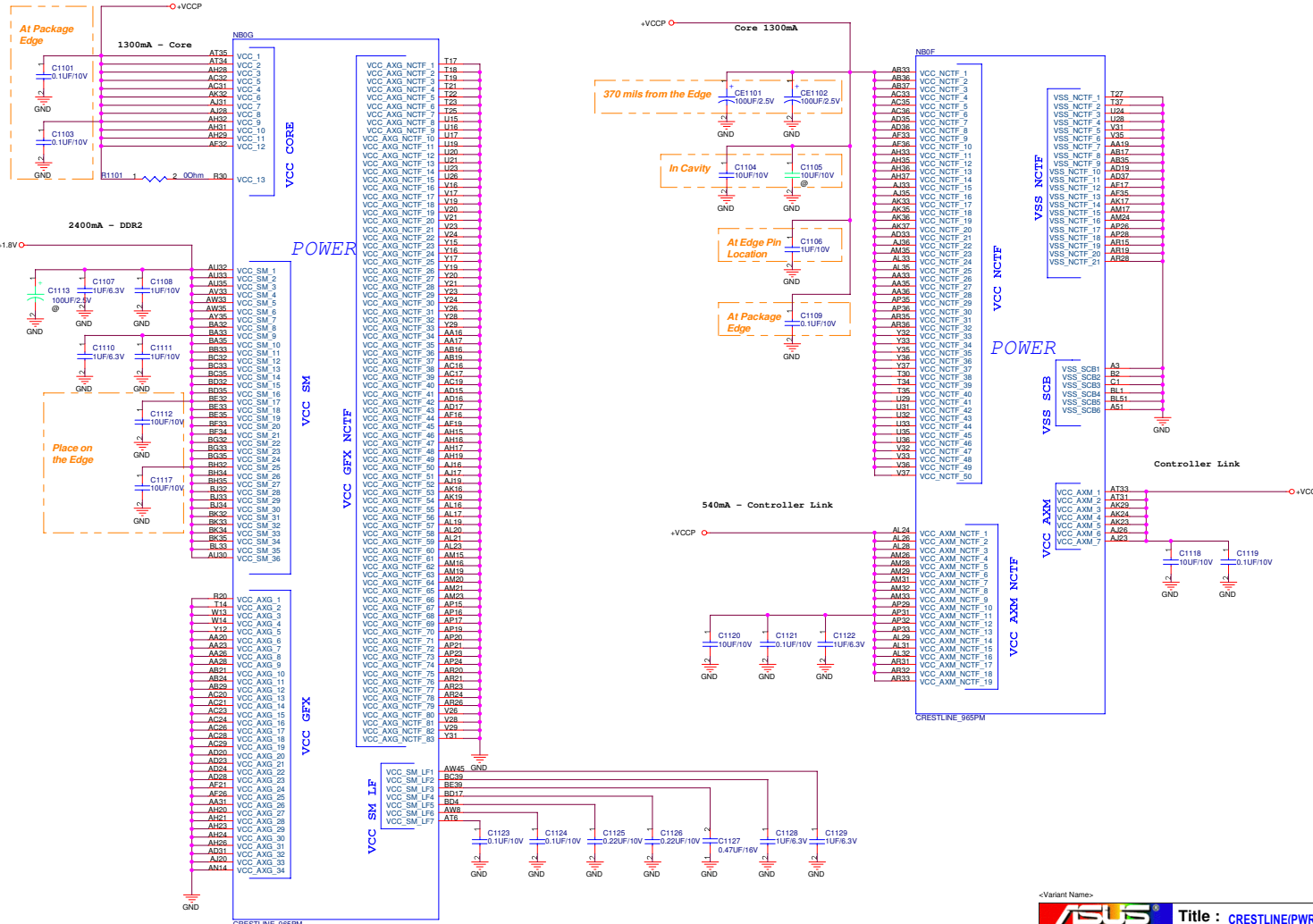
+VCCP
At Package Edge
1300mA - Core
C1101 0.1UF/10V
C1103 0.1UF/10V
R1101 0.0Ohm R30
GND
NB0G
VCC_CORE
POWER
2400mA - DDR2
+1.8V
C1113 100UF/2.5V @
C1107 1UF/6.3V
C1108 1UF/10V
C1110 1UF/6.3V
C1111 1UF/10V
C1112 10UF/10V
C1117 10UF/10V
Place on the Edge
VCC_SM
VCC_GFX_NCTF
VCC_GFX
VCC_SM_LF
CRESTLINE_965PM
Core 1300mA
370 mils from the Edge
CE1101 100UF/2.5V
CE1102 100UF/2.5V
In Cavity
C1104 10UF/10V
C1105 10UF/10V @
At Edge Pin Location
C1106 1UF/10V
At Package Edge
C1109 0.1UF/10V
NB0F
VCC_NCTF
VSS_NCTF
VSS_SCB
540mA - Controller Link
VCC_AXM_NCTF
VCC_AXM
Controller Link
C1120 10UF/10V
C1121 0.1UF/10V
C1122 1UF/6.3V
C1118 10UF/10V
C1119 0.1UF/10V
C1123 0.1UF/10V
C1124 0.1UF/10V
C1125 0.22UF/10V
C1126 0.22UF/10V
C1127 0.47UF/16V
C1128 1UF/6.3V
C1129 1UF/6.3V
<Variant Name>
Title : CRESTLINE(PWR)
ASUSTeK COMPUTER INC. NB1
Engineer: Gajun_Ho
Size Custom
Project Name F3Sc
Rev 2.0
Date: 星期一, 三月 21, 2007
Sheet 11 of 95

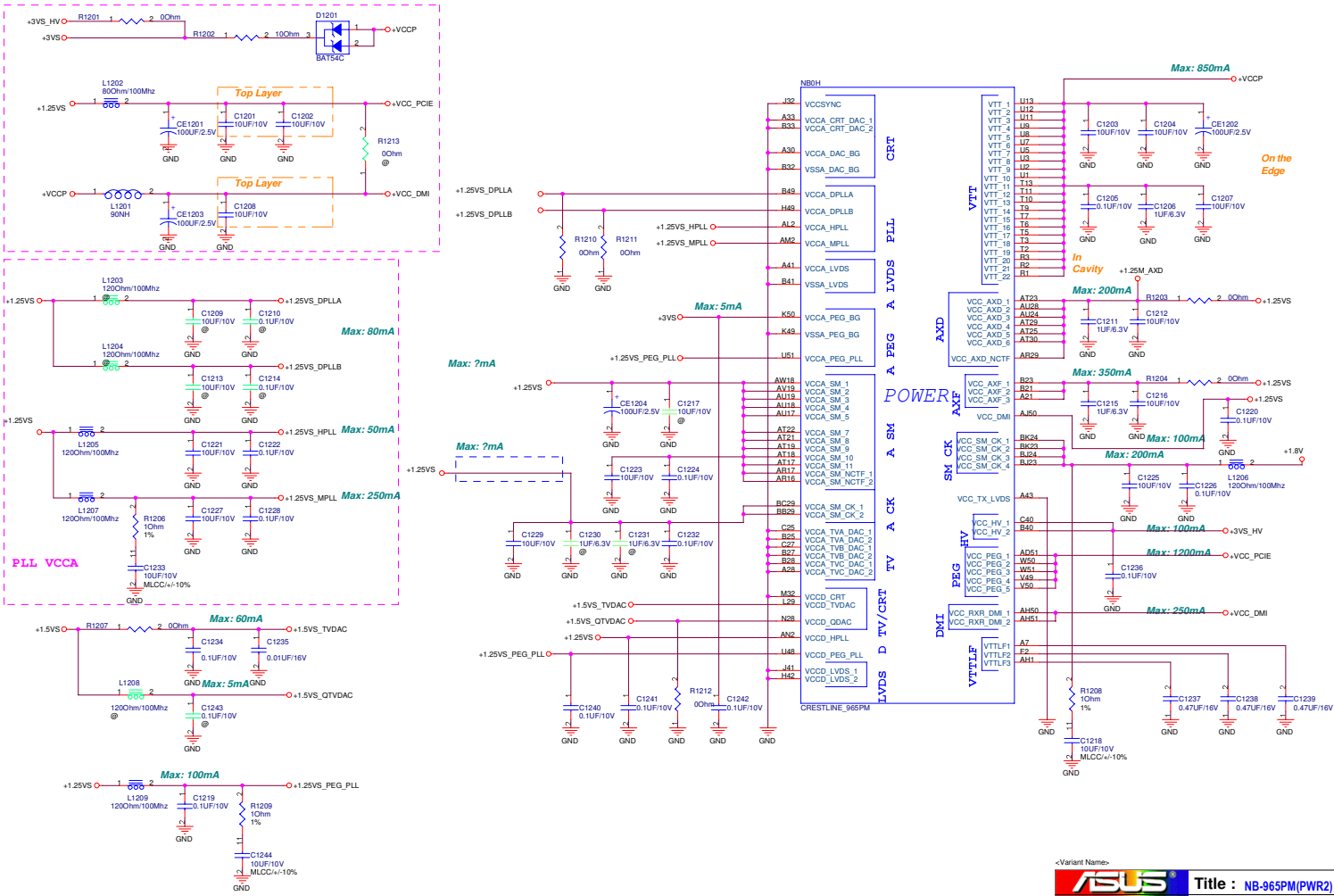

<Variant Name>

ASUSTeK COMPUTER INC. NB1	Title : NB-965PM(PWR2)		
	Engineer: Gajun_Ho		
Size: Custom	Project Name: F3Sc		Rev: 2.0
Date: 星期三, 三月 21, 2007	Sheet 12 of 95		

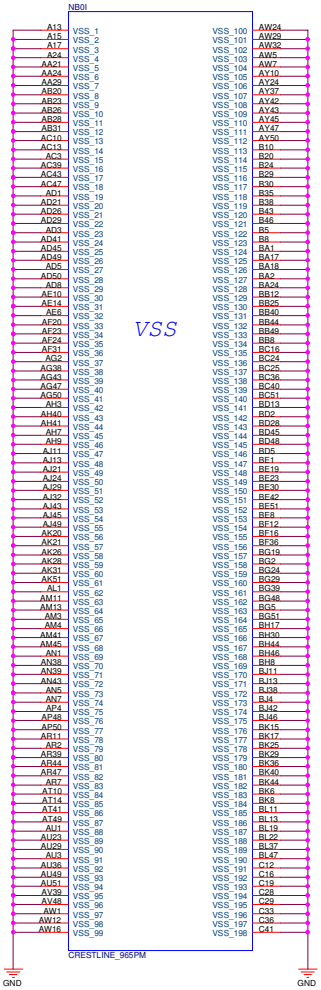

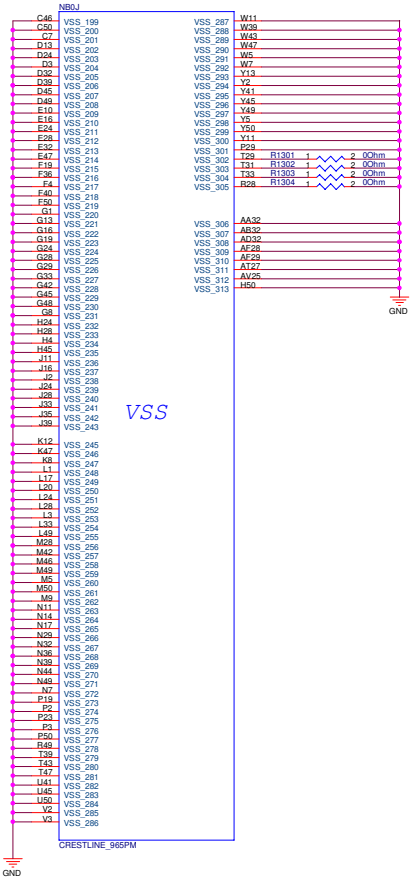

<Variant Name>

ASUSTeK COMPUTER INC. NB1	Title : CRESTLINE(GND)		
	Engineer: Gajun_Ho		
Size: Custom	Project Name: F3Sc		Rev: 2.0
Date: 星期三, 三月 21, 2007	Sheet 13 of 95		

<Variant Name>

ASUSTeK COMPUTER INC	Title : Schematic page name		
	Engineer: Gajun_Ho		
Size: C	Project Name: F3Sc		Rev: 2.0
Date: 星期一, 二月 21, 2007		Sheet 14 of 95	

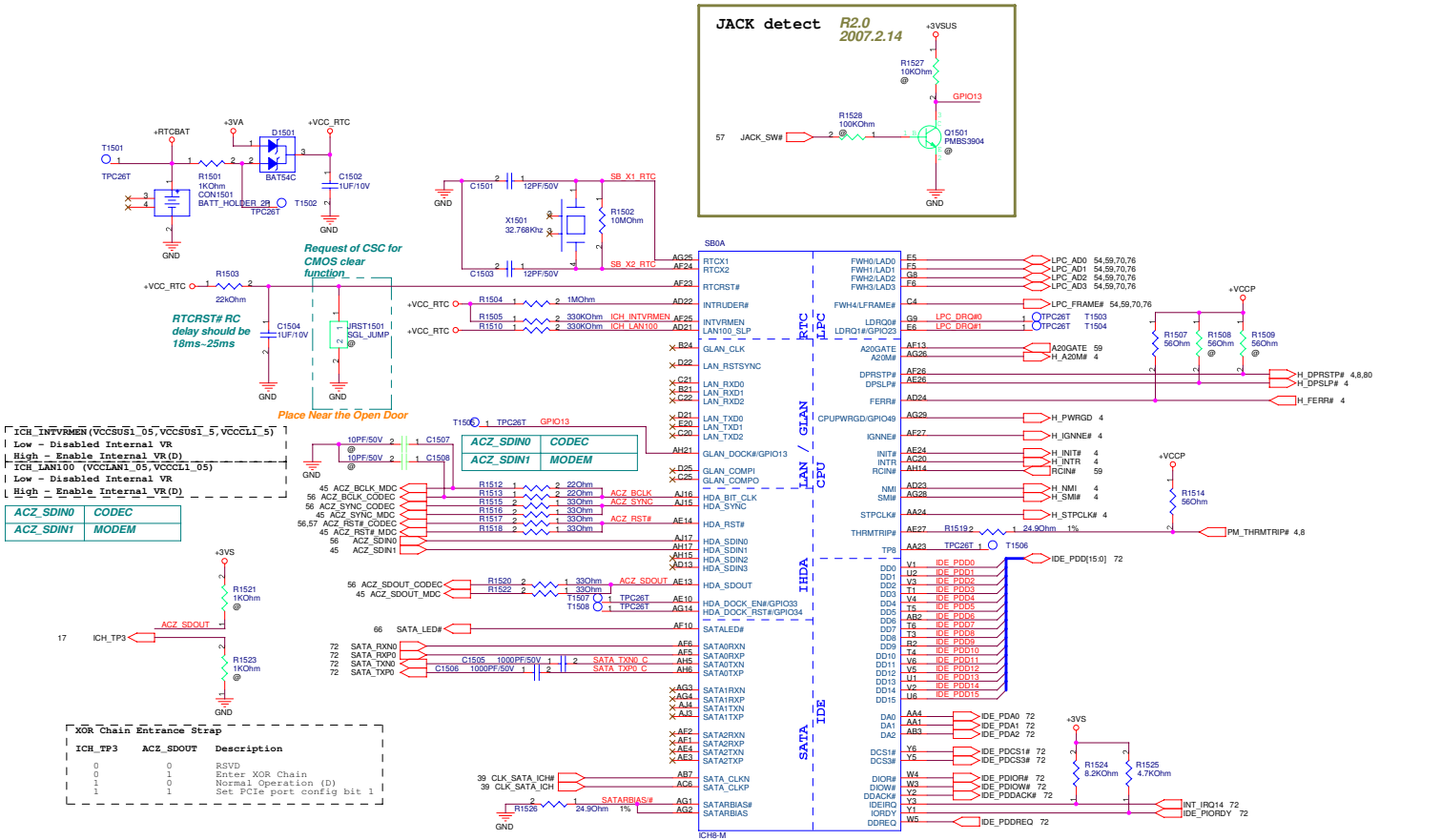
JACK detect
R2.0
2007.2.14
+3VSUS
R1527
10KOhm
GPIO13
R1528
100KOhm
57 JACK_SW#
Q1501
PMBS3904
GND
+RTCBAT
+3VA
+VCC_RTC
T1501
TPC26T
D1501
BAT54C
R1501
1KOhm
CON1501
BATT_HOLDER_2P
T1502
C1502
1UF/10V
C1501
12PF/50V
SB_X1_RTC
X1501
32.768Khz
R1502
10MOhm
C1503
SB_X2_RTC
Request of CSC for CMOS clear function
R1503
22kOhm
RTCRST# RC delay should be 18ms~25ms
C1504
1UF/10V
URST1501
SGL_JUMP
Place Near the Open Door
R1504
1MOhm
R1505
330KOhm
ICH_INTVRMEN
R1510
330KOhm
ICH_LAN100
SB0A
RTCX1
RTCX2
RTCRST#
INTRUDER#
INTVRMEN
LAN100_SLP
GLAN_CLK
LAN_RSTSYNC
LAN_RXD0
LAN_RXD1
LAN_RXD2
LAN_TXD0
LAN_TXD1
LAN_TXD2
GLAN_DOCK#/GPIO13
GLAN_COMPI
GLAN_COMPO
HDA_BIT_CLK
HDA_SYNC
HDA_RST#
HDA_SDIN0
HDA_SDIN1
HDA_SDIN2
HDA_SDIN3
HDA_SDOUT
HDA_DOCK_EN#/GPIO33
HDA_DOCK_RST#/GPIO34
SATALED#
SATA0RXN
SATA0RXP
SATA0TXN
SATA0TXP
SATA1RXN
SATA1RXP
SATA1TXN
SATA1TXP
SATA2RXN
SATA2RXP
SATA2TXN
SATA2TXP
SATA_CLKN
SATA_CLKP
SATARBIAS#
SATARBIAS
RTC
LPC
GLAN
LAN / CPU
HDA
SATA
IDE
FWH0/LAD0
FWH1/LAD1
FWH2/LAD2
FWH3/LAD3
FWH4/LFRAME#
LDRQ0#
LDRQ1#/GPIO23
A20GATE
A20M#
DPRSTP#
DPSLP#
FERR#
CPUPWRGD/GPIO49
IGNNE#
INIT#
INTR
RCIN#
NMI
SMI#
STPCLK#
THRMTRIP#
TP8
DD0
DD1
DD2
DD3
DD4
DD5
DD6
DD7
DD8
DD9
DD10
DD11
DD12
DD13
DD14
DD15
DA0
DA1
DA2
DCS1#
DCS3#
DIOR#
DIOW#
DDACK#
IDEIRQ
IORDY
DDREQ
LPC_AD0 54,59,70,76
LPC_AD1 54,59,70,76
LPC_AD2 54,59,70,76
LPC_AD3 54,59,70,76
LPC_FRAME# 54,59,70,76
LPC_DRQ#0
LPC_DRQ#1
TPC26T T1503
TPC26T T1504
A20GATE 59
H_A20M# 4
H_DPRSTP# 4,8,80
H_DPSLP# 4
H_FERR# 4
H_PWRGD 4
H_IGNNE# 4
H_INIT# 4
H_INTR 4
RCIN# 59
H_NMI 4
H_SMI# 4
H_STPCLK# 4
R1519 2
24.9Ohm 1%
PM_THRMTRIP# 4,8
TPC26T T1506
IDE_PDD[15:0] 72
IDE_PDA0 72
IDE_PDA1 72
IDE_PDA2 72
IDE_PDCS1# 72
IDE_PDCS3# 72
IDE_PDIOR# 72
IDE_PDIOW# 72
IDE_PDDACK# 72
INT_IRQ14 72
IDE_PIORDY 72
IDE_PDDREQ 72
+VCCP
R1507
56Ohm
R1508
56Ohm
R1509
56Ohm
R1514
56Ohm
R1524
8.2KOhm
R1525
4.7KOhm
ICH8-M
ICH_INTVRMEN(VCCSUS1_05,VCCSUS1_5,VCCCL1_5)
Low - Disabled Internal VR
High - Enable Internal VR(D)
ICH_LAN100 (VCCLAN1_05,VCCCL1_05)
Low - Disabled Internal VR
High - Enable Internal VR(D)
ACZ_SDIN0 CODEC
ACZ_SDIN1 MODEM
10PF/50V
C1507
C1508
T1505 TPC26T GPIO13
ACZ_SDIN0 CODEC
ACZ_SDIN1 MODEM
45 ACZ_BCLK_MDC
56 ACZ_BCLK_CODEC
56 ACZ_SYNC_CODEC
45 ACZ_SYNC_MDC
56,57 ACZ_RST# CODEC
45 ACZ_RST# MDC
56 ACZ_SDIN0
45 ACZ_SDIN1
R1512 22Ohm
R1513 22Ohm
R1515 33Ohm
R1516 33Ohm
R1517 33Ohm
R1518 33Ohm
ACZ_BCLK
ACZ_SYNC
ACZ_RST#
+3VS
R1521
1KOhm
17 ICH_TP3
ACZ_SDOUT
R1523
1KOhm
56 ACZ_SDOUT_CODEC
45 ACZ_SDOUT_MDC
R1520 33Ohm
R1522 33Ohm
T1507 TPC26T
T1508 TPC26T
66 SATA_LED#
72 SATA_RXN0
72 SATA_RXP0
72 SATA_TXN0
72 SATA_TXP0
C1505 1000PF/50V
C1506 1000PF/50V
SATA_TXN0_C
SATA_TXP0_C
39 CLK_SATA_ICH#
39 CLK_SATA_ICH
R1526
24.9Ohm 1%
SATARBIAS#
XOR Chain Entrance Strap
ICH_TP3 ACZ_SDOUT Description
0 0 RSVD
0 1 Enter XOR Chain
1 0 Normal Operation (D)
1 1 Set PCIe port config bit 1
<Variant Name>
Title : SB-ICH8M(1)
ASUSTeK COMPUTER INC. NB1
Engineer: Gajun_Ho
Size Custom
Project Name F3Sc
Rev 2.0
Date: 星期三, 二月 21, 2007
Sheet 15 of 95

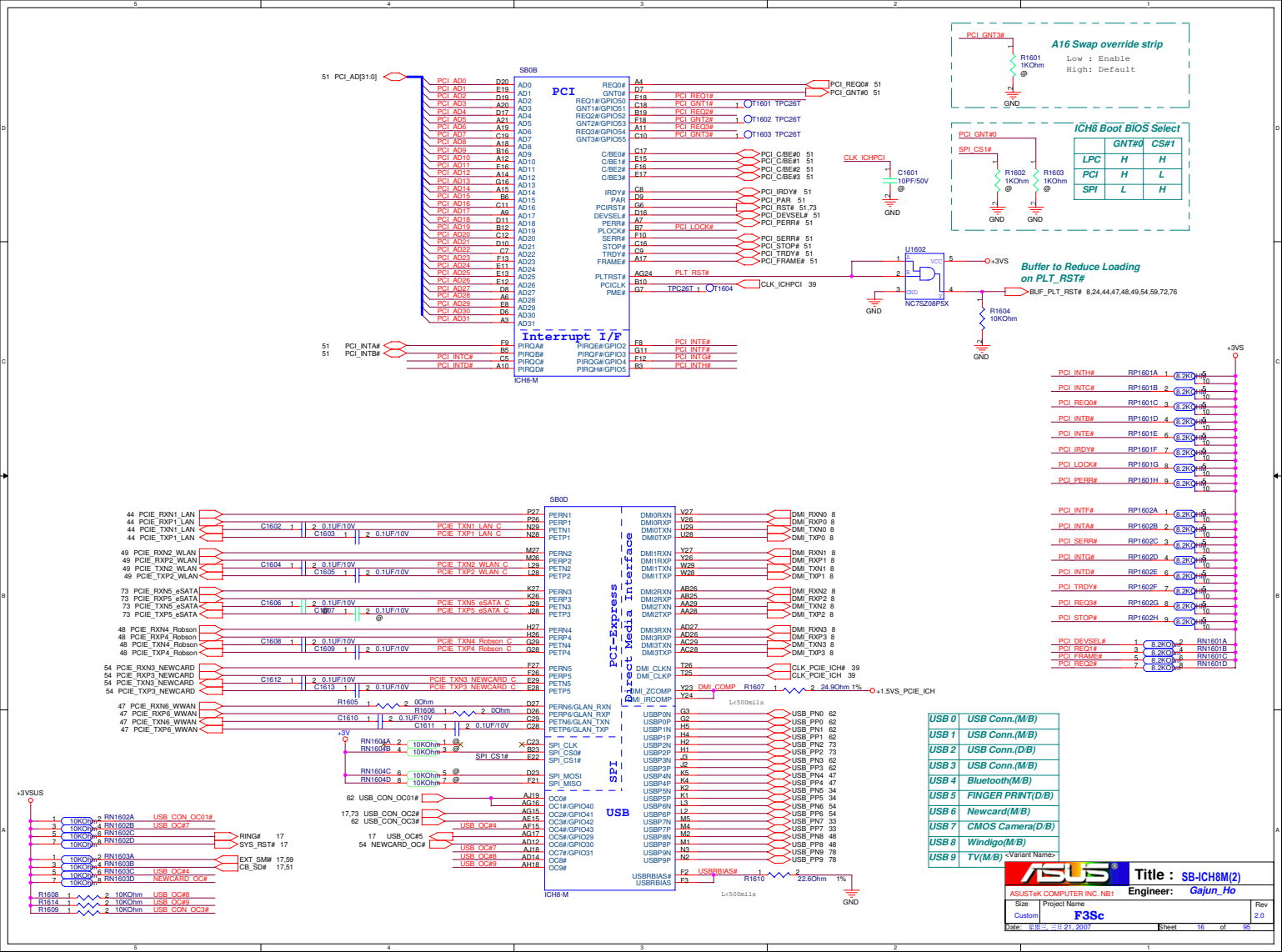
SB0B
PCI
Interrupt I/F
ICH8-M
51 PCI_AD[31:0]
PCI_AD0 D20
PCI_AD1 E19
PCI_AD2 D19
PCI_AD3 A20
PCI_AD4 D17
PCI_AD5 A21
PCI_AD6 A19
PCI_AD7 C19
PCI_AD8 A18
PCI_AD9 B16
PCI_AD10 A12
PCI_AD11 F16
PCI_AD12 A14
PCI_AD13 G16
PCI_AD14 A15
PCI_AD15 B6
PCI_AD16 C11
PCI_AD17 A9
PCI_AD18 D11
PCI_AD19 B12
PCI_AD20 C12
PCI_AD21 D10
PCI_AD22 C7
PCI_AD23 F13
PCI_AD24 E11
PCI_AD25 E13
PCI_AD26 E12
PCI_AD27 D8
PCI_AD28 A6
PCI_AD29 E8
PCI_AD30 D6
PCI_AD31 A3
AD0 AD1 AD2 AD3 AD4 AD5 AD6 AD7 AD8 AD9 AD10 AD11 AD12 AD13 AD14 AD15 AD16 AD17 AD18 AD19 AD20 AD21 AD22 AD23 AD24 AD25 AD26 AD27 AD28 AD29 AD30 AD31
REQ0# A4
GNT0# D7
REQ1#/GPIO50 E18 PCI_REQ1#
GNT1#/GPIO51 C18 PCI_GNT1# T1601 TPC26T
REQ2#/GPIO52 B19 PCI_REQ2#
GNT2#/GPIO53 F18 PCI_GNT2# T1602 TPC26T
REQ3#/GPIO54 A11 PCI_REQ3#
GNT3#/GPIO55 C10 PCI_GNT3# T1603 TPC26T
PCI_REQ0# 51
PCI_GNT#0 51
C/BE0# C17 PCI_C/BE#0 51
C/BE1# E15 PCI_C/BE#1 51
C/BE2# F16 PCI_C/BE#2 51
C/BE3# E17 PCI_C/BE#3 51
IRDY# C8 PCI_IRDY# 51
PAR D9 PCI_PAR 51
PCIRST# G6 PCI_RST# 51,73
DEVSEL# D16 PCI_DEVSEL# 51
PERR# A2 PCI_PERR# 51
PLOCK# B7 PCI_LOCK#
SERR# F10 PCI_SERR# 51
STOP# C16 PCI_STOP# 51
TRDY# C9 PCI_TRDY# 51
FRAME# A17 PCI_FRAME# 51
PLTRST# AG24 PLT_RST#
PCICLK B10 CLK_ICHPCI 39
PME# G7 TPC26T 1 T1604
51 PCI_INTA# F9 PIRQA# PIRQE#/GPIO2 F8 PCI_INTE#
51 PCI_INTB# B5 PIRQB# PIRQF#/GPIO3 G11 PCI_INTF#
PCI_INTC# C5 PIRQC# PIRQG#/GPIO4 F12 PCI_INTG#
PCI_INTD# A10 PIRQD# PIRQH#/GPIO5 B3 PCI_INTH#
PCI_GNT3#
R1601 1KOhm @
GND
A16 Swap override strip
Low : Enable
High: Default
PCI_GNT#0
SPI_CS1#
R1602 1KOhm @
R1603 1KOhm @
GND
GND
ICH8 Boot BIOS Select
GNT#0 CS#1
LPC H H
PCI H L
SPI L H
CLK_ICHPCI
C1601 10PF/50V @
GND
U1602
VCC
NC7SZ08P5X
+3VS
Buffer to Reduce Loading on PLT_RST#
BUF_PLT_RST# 8,24,44,47,48,49,54,59,72,76
R1604 10KOhm
GND
+3VS
PCI_INTH# RP1601A 1 8.2KOhm 2 5 10
PCI_INTC# RP1601B 2 8.2KOhm 3 6 9
PCI_REQ0# RP1601C 3 8.2KOhm 4 7 8
PCI_INTB# RP1601D 4 8.2KOhm 5 8 7
PCI_INTE# RP1601E 6 8.2KOhm 6 9 6
PCI_IRDY# RP1601F 7 8.2KOhm 7 10 5
PCI_LOCK# RP1601G 8 8.2KOhm 8 10 4
PCI_PERR# RP1601H 9 8.2KOhm 9 10 3
PCI_INTF# RP1602A 1 8.2KOhm 2 5 10
PCI_INTA# RP1602B 2 8.2KOhm 3 6 9
PCI_SERR# RP1602C 3 8.2KOhm 4 7 8
PCI_INTG# RP1602D 4 8.2KOhm 5 8 7
PCI_INTD# RP1602E 6 8.2KOhm 6 9 6
PCI_TRDY# RP1602F 7 8.2KOhm 7 10 5
PCI_REQ3# RP1602G 8 8.2KOhm 8 10 4
PCI_STOP# RP1602H 9 8.2KOhm 9 10 3
PCI_DEVSEL# 1 8.2KOhm 2 RN1601A
PCI_REQ1# 3 8.2KOhm 4 RN1601B
PCI_FRAME# 5 8.2KOhm 6 RN1601C
PCI_REQ2# 7 8.2KOhm 8 RN1601D
SB0D
PCI-Express
Direct Media Interface
SPI
USB
ICH8-M
44 PCIE_RXN1_LAN P27 PERN1
44 PCIE_RXP1_LAN P26 PERP1
44 PCIE_TXN1_LAN N29 PETN1
44 PCIE_TXP1_LAN N28 PETP1
C1602 1 2 0.1UF/10V
C1603 1 2 0.1UF/10V
PCIE_TXN1_LAN_C
PCIE_TXP1_LAN_C
49 PCIE_RXN2_WLAN M27 PERN2
49 PCIE_RXP2_WLAN M26 PERP2
49 PCIE_TXN2_WLAN L29 PETN2
49 PCIE_TXP2_WLAN L28 PETP2
C1604 1 2 0.1UF/10V
C1605 1 2 0.1UF/10V
PCIE_TXN2_WLAN_C
PCIE_TXP2_WLAN_C
73 PCIE_RXN5_eSATA K27 PERN3
73 PCIE_RXP5_eSATA K26 PERP3
73 PCIE_TXN5_eSATA J29 PETN3
73 PCIE_TXP5_eSATA J28 PETP3
C1606 1 2 0.1UF/10V
C1607 1 2 0.1UF/10V @
PCIE_TXN5_eSATA_C
PCIE_TXP5_eSATA_C
48 PCIE_RXN4_Robson H27 PERN4
48 PCIE_RXP4_Robson H26 PERP4
48 PCIE_TXN4_Robson G29 PETN4
48 PCIE_TXP4_Robson G28 PETP4
C1608 1 2 0.1UF/10V
C1609 1 2 0.1UF/10V
PCIE_TXN4_Robson_C
PCIE_TXP4_Robson_C
54 PCIE_RXN3_NEWCARD F27 PERN5
54 PCIE_RXP3_NEWCARD F26 PERP5
54 PCIE_TXN3_NEWCARD E29 PETN5
54 PCIE_TXP3_NEWCARD E28 PETP5
C1612 1 2 0.1UF/10V
C1613 1 2 0.1UF/10V
PCIE_TXN3_NEWCARD_C
PCIE_TXP3_NEWCARD_C
47 PCIE_RXN6_WWAN D27 PERN6/GLAN_RXN
47 PCIE_RXP6_WWAN D26 PERP6/GLAN_RXP
47 PCIE_TXN6_WWAN C29 PETN6/GLAN_TXN
47 PCIE_TXP6_WWAN C28 PETP6/GLAN_TXP
R1605 1 2 0Ohm
R1606 1 2 0Ohm
C1610 1 2 0.1UF/10V
C1611 1 2 0.1UF/10V
+3V
RN1604A 2 10KOhm 1 @
RN1604B 4 10KOhm 3 @
RN1604C 6 10KOhm 5 @
RN1604D 8 10KOhm 7 @
SPI_CS1#
SPI_CLK C23
SPI_CS0# B23
SPI_CS1# E22
SPI_MOSI D23
SPI_MISO F21
DMI0RXN V27
DMI0RXP V26
DMI0TXN U29
DMI0TXP U28
DMI1RXN Y27
DMI1RXP Y26
DMI1TXN W29
DMI1TXP W28
DMI2RXN AB26
DMI2RXP AB25
DMI2TXN AA29
DMI2TXP AA28
DMI3RXN AD27
DMI3RXP AD26
DMI3TXN AC29
DMI3TXP AC28
DMI_CLKN T26
DMI_CLKP T25
DMI_ZCOMP Y23
DMI_IRCOMP Y24
DMI_COMP R1607 1 2 24.9Ohm 1%
+1.5VS_PCIE_ICH
L<500mils
DMI_RXN0 8
DMI_RXP0 8
DMI_TXN0 8
DMI_TXP0 8
DMI_RXN1 8
DMI_RXP1 8
DMI_TXN1 8
DMI_TXP1 8
DMI_RXN2 8
DMI_RXP2 8
DMI_TXN2 8
DMI_TXP2 8
DMI_RXN3 8
DMI_RXP3 8
DMI_TXN3 8
DMI_TXP3 8
CLK_PCIE_ICH# 39
CLK_PCIE_ICH 39
USB0N G3
USB0P G2
USB1N H5
USB1P H4
USB2N H2
USB2P H1
USB3N J3
USB3P J2
USB4N K5
USB4P K4
USB5N K2
USB5P K1
USB6N L3
USB6P L2
USB7N M5
USB7P M4
USB8N M2
USB8P M1
USB9N N3
USB9P N2
USB_PN0 62
USB_PP0 62
USB_PN1 62
USB_PP1 62
USB_PN2 73
USB_PP2 73
USB_PN3 62
USB_PP3 62
USB_PN4 47
USB_PP4 47
USB_PN5 34
USB_PP5 34
USB_PN6 54
USB_PP6 54
USB_PN7 33
USB_PP7 33
USB_PN8 48
USB_PP8 48
USB_PN9 78
USB_PP9 78
62 USB_CON_OC01# AJ19 OC0#
AG16 OC1#/GPIO40
17,73 USB_CON_OC2# AG15 OC2#/GPIO41
62 USB_CON_OC3# AE15 OC3#/GPIO42
USB_OC#4 AF15 OC4#/GPIO43
17 USB_OC#5 AG17 OC5#/GPIO29
54 NEWCARD_OC# AD12 OC6#/GPIO30
USB_OC#7 AJ18 OC7#/GPIO31
USB_OC#8 AD14 OC8#
USB_OC#9 AH18 OC9#
F2 USBRBIAS#
F3 USBRBIAS
R1610 1 2 22.6Ohm 1%
L<500mils
GND
+3VSUS
1 10KOhm 2 RN1602A USB_CON_OC01#
3 10KOhm 4 RN1602B USB_OC#7
5 10KOhm 6 RN1602C
7 10KOhm 8 RN1602D
RING# 17
SYS_RST# 17
1 10KOhm 2 RN1603A
3 10KOhm 4 RN1603B
5 10KOhm 6 RN1603C USB_OC#4
7 10KOhm 8 RN1603D NEWCARD_OC#
EXT_SMI# 17,59
CB_SD# 17,51
R1608 1 2 10KOhm USB_OC#8
R1614 1 2 10KOhm USB_OC#9
R1609 1 2 10KOhm USB_CON_OC3#
USB 0 USB Conn.(M/B)
USB 1 USB Conn.(M/B)
USB 2 USB Conn.(D/B)
USB 3 USB Conn.(M/B)
USB 4 Bluetooth(M/B)
USB 5 FINGER PRINT(D/B)
USB 6 Newcard(M/B)
USB 7 CMOS Camera(D/B)
USB 8 Windigo(M/B)
USB 9 TV(M/B) <Variant Name>
Title : SB-ICH8M(2)
ASUSTeK COMPUTER INC. NB1
Engineer: Gajun_Ho
Size Custom
Project Name F3Sc
Rev 2.0
Date: 星期三, 三月 21, 2007
Sheet 16 of 95

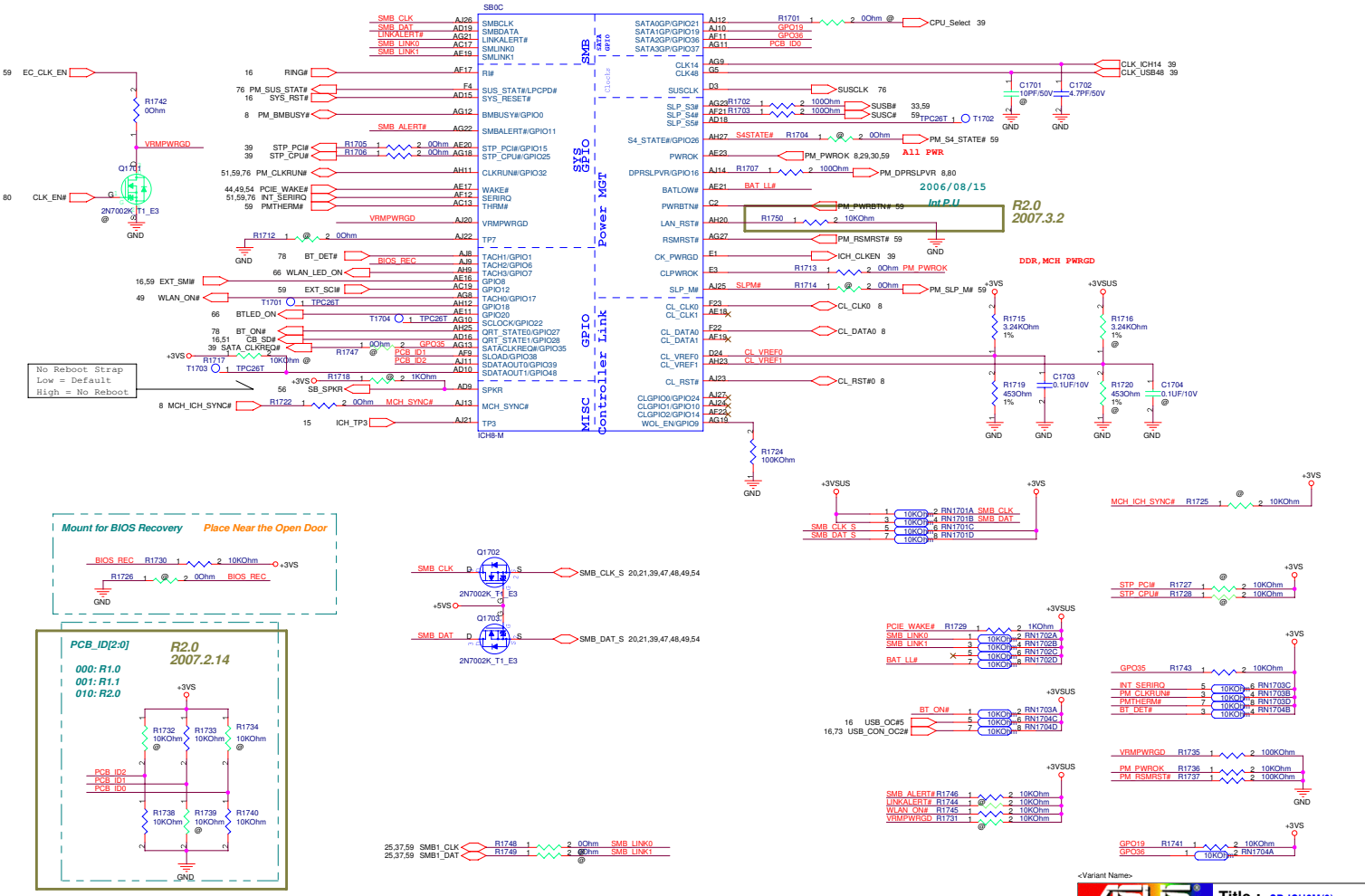

<Variant Name>

ASUSTeK COMPUTER INC. NB1	Title : SB-ICH8M(3)		
	Engineer: Gajun_Ho		
Size: Custom	Project Name: F3Sc		Rev: 2.0
Date: 星期三, 三月 21, 2007	Sheet 17 of 95		

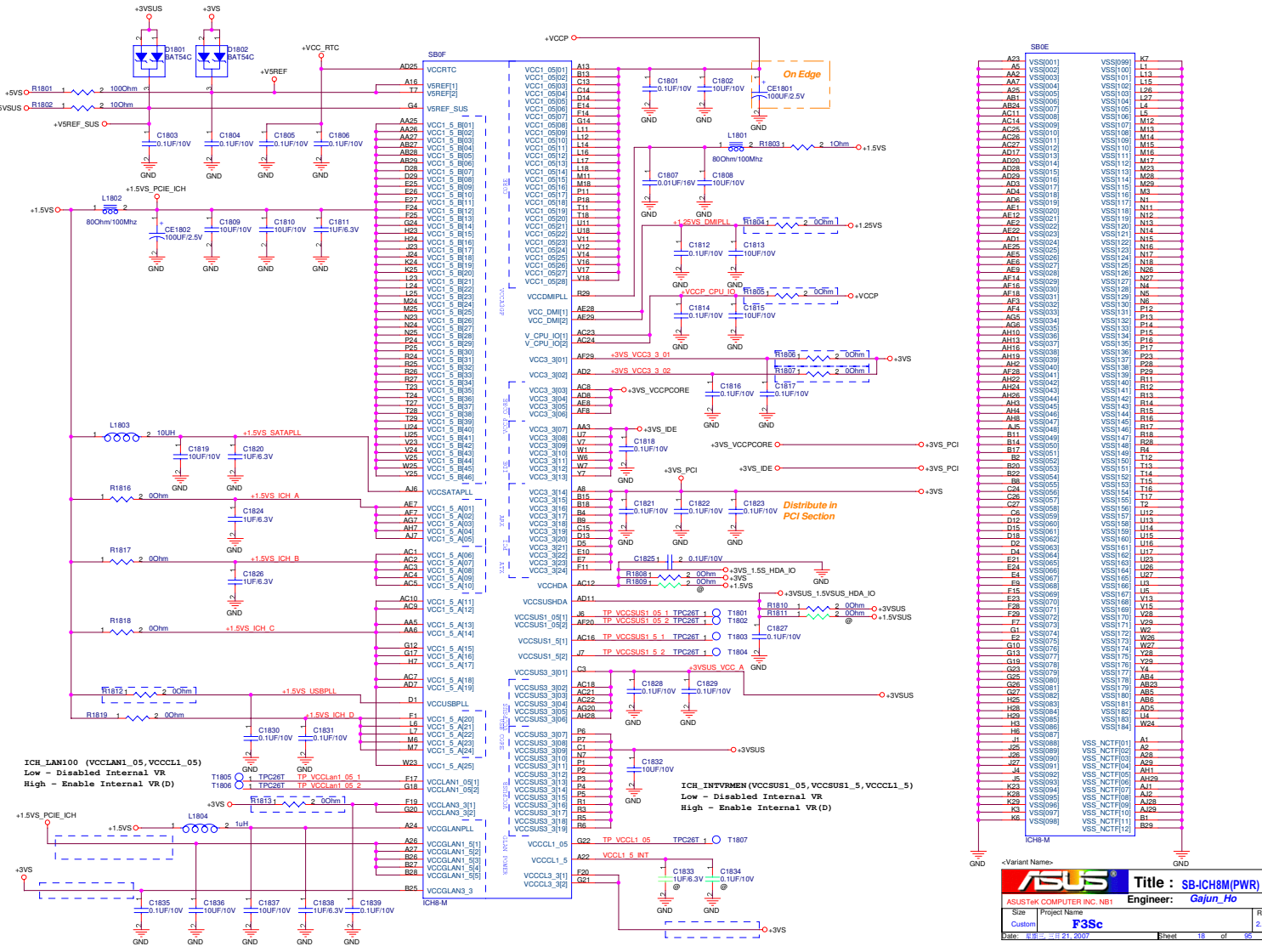
SB0F
SB0E
ICH8-M
On Edge
Distribute in PCI Section
ICH_LAN100 (VCCLAN1_05,VCCCL1_05)
Low - Disabled Internal VR
High - Enable Internal VR(D)
ICH_INTVRMEN(VCCSUS1_05,VCCSUS1_5,VCCCL1_5)
Low - Disabled Internal VR
High - Enable Internal VR(D)
+3VSUS
+3VS
+5VS
+5VSUS
+1.5VS
+1.25VS
+VCCP
+VCC_RTC
+V5REF
+V5REF_SUS
+1.5VS_PCIE_ICH
+1.5VS_SATAPLL
+1.5VS_ICH_A
+1.5VS_ICH_B
+1.5VS_ICH_C
+1.5VS_ICH_D
+1.5VS_USBPLL
+3VS_VCC3_3_01
+3VS_VCC3_3_02
+3VS_VCCPCORE
+3VS_IDE
+3VS_PCI
+3VS_1.5S_HDA_IO
+3VSUS_1.5VSUS_HDA_IO
+3VSUS_VCC_A
+3VS_PCI
TP_VCCSUS1_05_1 TPC26T
TP_VCCSUS1_05_2 TPC26T
TP_VCCSUS1_5_1 TPC26T
TP_VCCSUS1_5_2 TPC26T
TP_VCCLan1_05_1 TPC26T
TP_VCCLan1_05_2 TPC26T
TP_VCCL1_05 TPC26T
VCCL1_5_INT
Title : SB-ICH8M(PWR)
ASUSTeK COMPUTER INC. NB1
Engineer: Gajun_Ho
Size Custom
Project Name F3Sc
Rev 2.0
Date: 星期三, 二月 21, 2007
Sheet 18 of 95

<Variant Name>

ASUSTeK COMPUTER INC	Title : Schematic page name		
	Engineer: Gajun_Ho		
Size: Custom	Project Name: F3Sc		Rev: 2.0
Date: 星期三, 三月 21, 2007	Sheet 19 of 95		

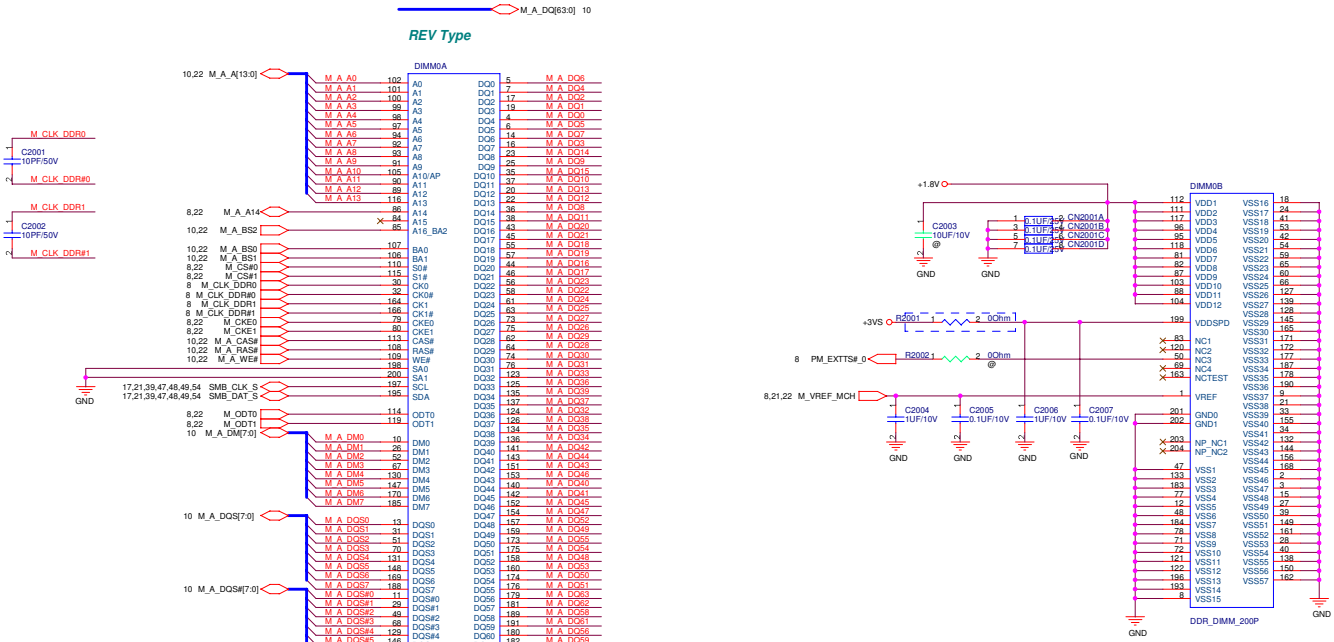

<Variant Name>

ASUSTeK COMPUTER INC. NB1	Title : DDR2 SO-DIMM0		
	Engineer: Gajun_Ho		
Size: Custom	Project Name: F3Sc		Rev: 2.0
Date: 星期三, 三月 21, 2007	Sheet 20 of 95		

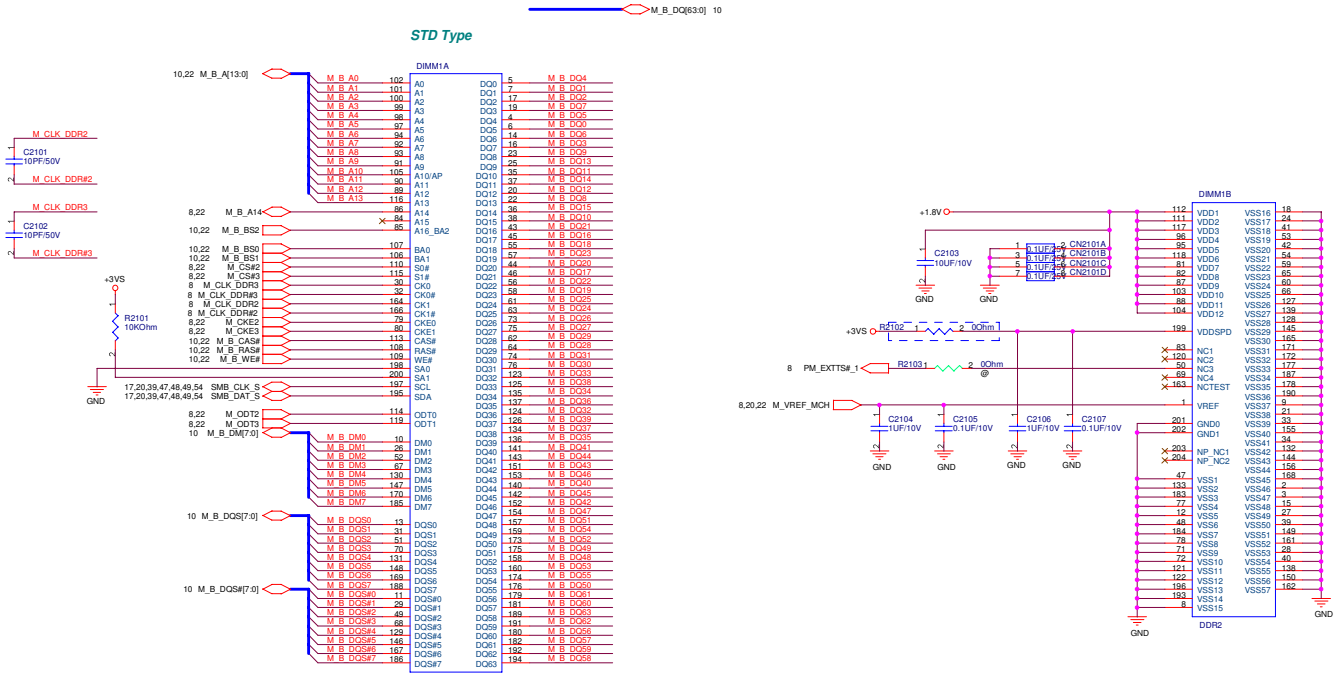

<Variant Name>

ASUSTeK COMPUTER INC. NB1	Title : DDR2 SO-DIMM1		
	Engineer: Gajun_Ho		
Size: Custom	Project Name: F3Sc		Rev: 2.0
Date: 星期三, 三月 21, 2007	Sheet 21 of 95		

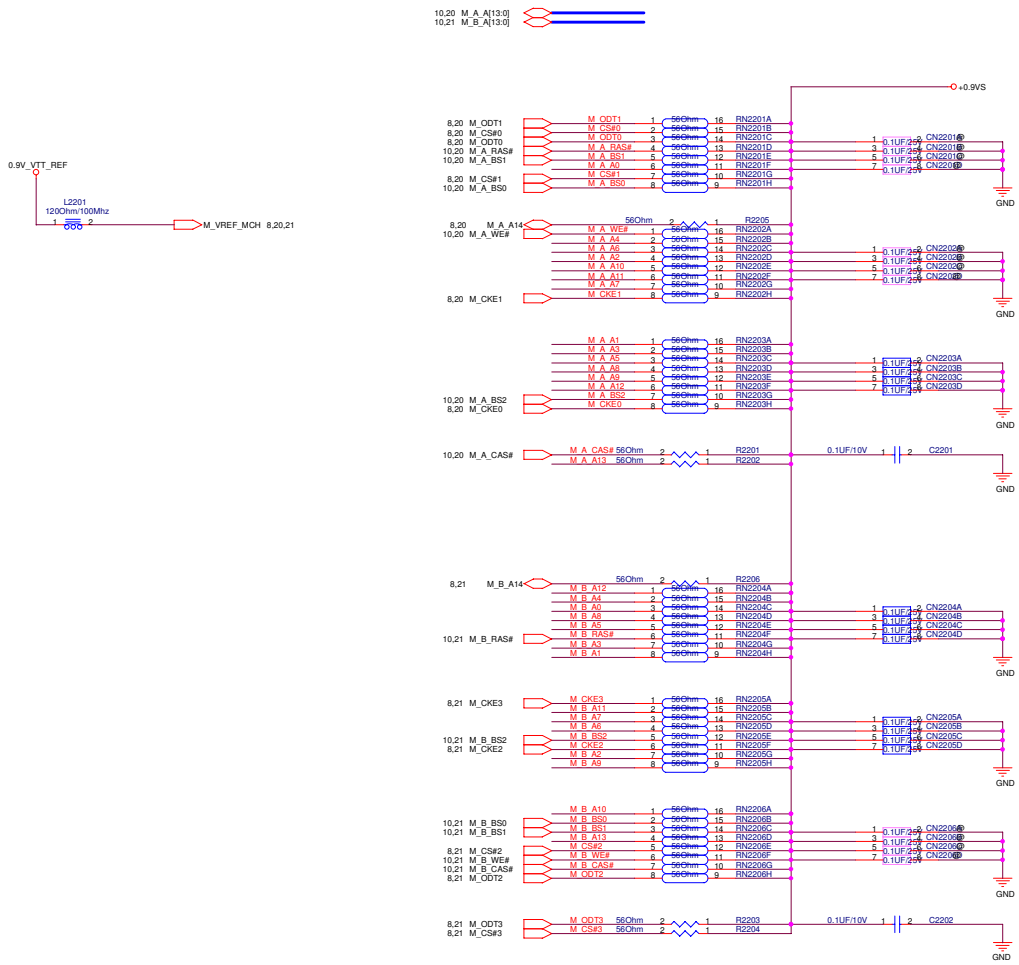

<Variant Name>

ASUSTeK COMPUTER INC. NB1	Title : DDR2 TERMINATION	
	Engineer: Gajun_Ho	
Size: Custom	Project Name: F3Sc	Rev: 2.0
Date: 星期三, 二月 21, 2007	Sheet 22 of 95	

<Variant Name>

ASUSTeK COMPUTER INC	Title : Schematic page name	
	Engineer: Gajun_Ho	
Size: Custom	Project Name: F3Sc	Rev: 2.0
Date: 星期二, 二月 21, 2007	Sheet 23 of 95	

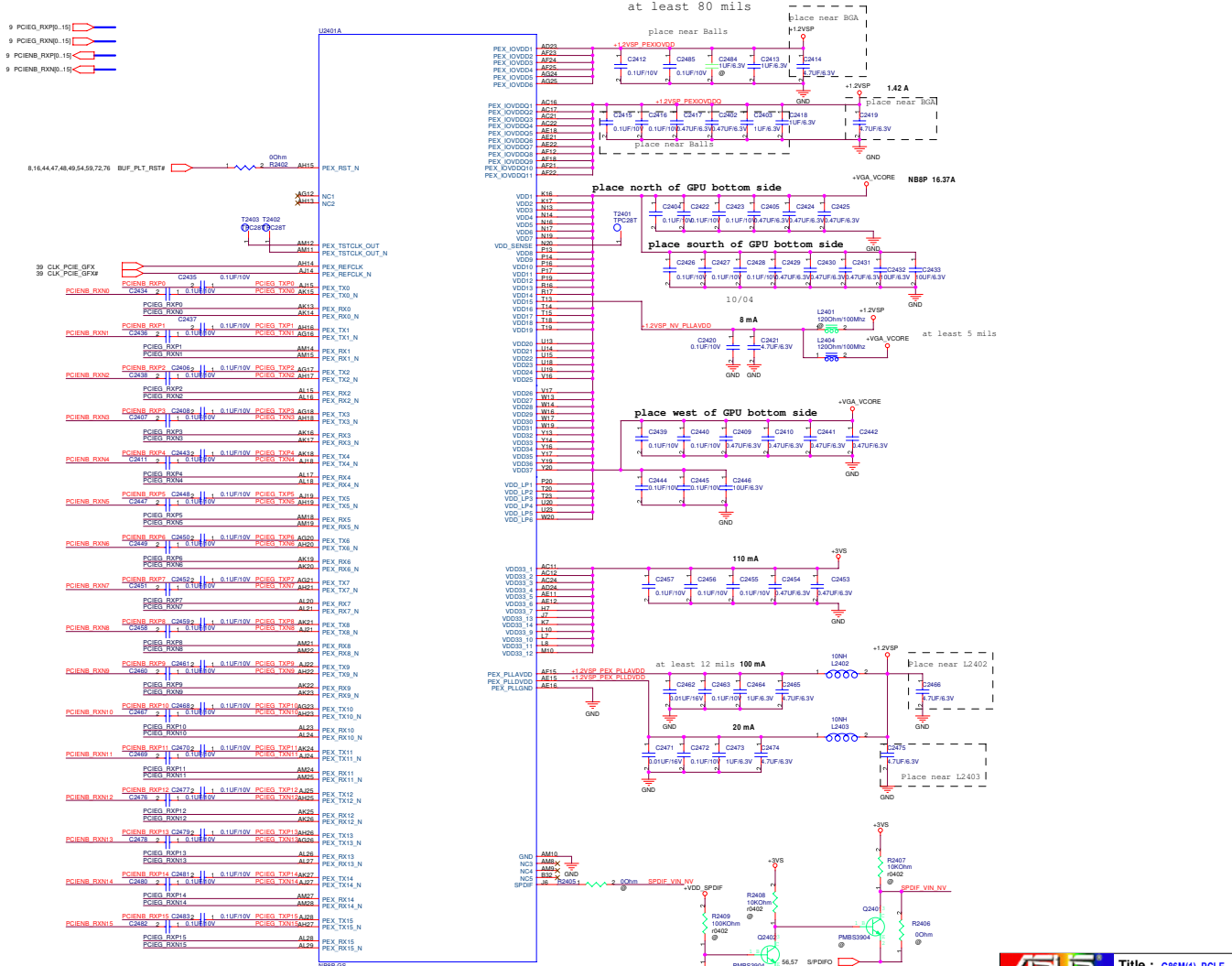
U2401A
NB8P 16.37A
at least 80 mils
place near Balls
place near BGA
+1.2VSP
1.42 A
place north of GPU bottom side
place sourth of GPU bottom side
+VGA_VCORE
10/04
8 mA
at least 5 mils
place west of GPU bottom side
110 mA
at least 12 mils
100 mA
20 mA
Place near L2402
Place near L2403
+3VS
S/PDIF Apapter in : +VDD_SPDIF : HIGH
S/PDIF No Apapter in : +VDD_SPDIF : LOW
Title : G86M(1)_PCI-E
Engineer: Gajun_Ho
F3Sc
Sheet 24 of 95

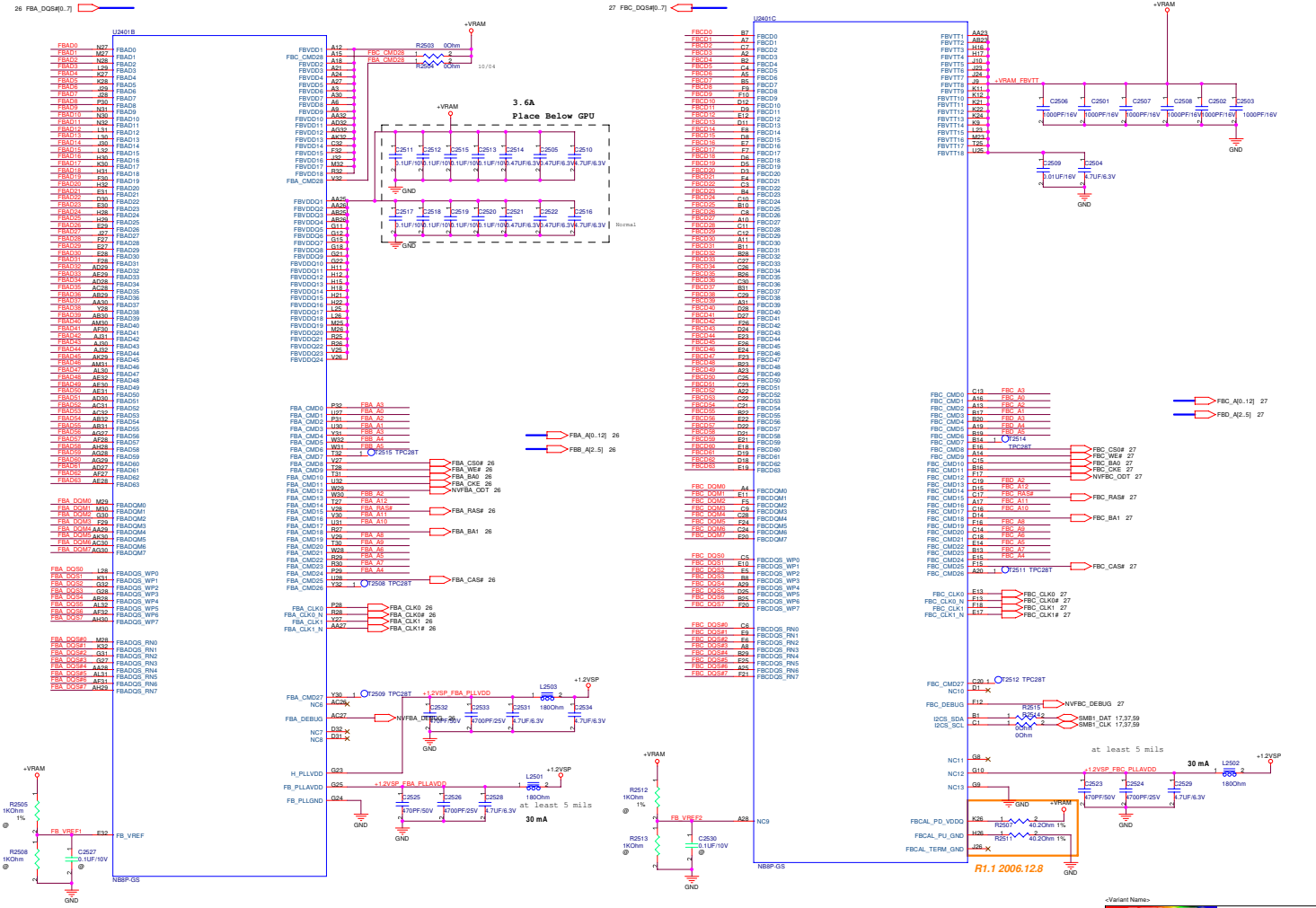
26 FBAD[0..63]
26 FBA_DQM[0..7]
26 FBA_DQS[0..7]
26 FBA_DQS#[0..7]
27 FBCD[0..63]
27 FBC_DQM[0..7]
27 FBC_DQS[0..7]
27 FBC_DQS#[0..7]
U2401B
U2401C
+VRAM
R2503 0Ohm
R2504 0Ohm
10/04
3.6A
Place Below GPU
Normal
FBA_A[0..12] 26
FBB_A[2..5] 26
FBC_A[0..12] 27
FBD_A[2..5] 27
FBA_CS0# 26
FBA_WE# 26
FBA_BA0 26
FBA_CKE 26
NVFBA_ODT 26
FBA_RAS# 26
FBA_BA1 26
FBA_CAS# 26
FBA_CLK0 26
FBA_CLK0# 26
FBA_CLK1 26
FBA_CLK1# 26
FBC_CS0# 27
FBC_WE# 27
FBC_BA0 27
FBC_CKE 27
NVFBC_ODT 27
FBC_RAS# 27
FBC_BA1 27
FBC_CAS# 27
FBC_CLK0 27
FBC_CLK0# 27
FBC_CLK1 27
FBC_CLK1# 27
NVFBC_DEBUG 27
SMB1_DAT 17,37,59
SMB1_CLK 17,37,59
+1.2VSP_FBA_PLLVDD
+1.2VSP_FBC_PLLVDD
30 mA
at least 5 mils
FB_VREF1
FB_VREF2
NBBP-GS
R1.1 2006.12.8
Title : G86M(2)--Memory IF
Engineer: Gajun_Ho
ASUSTek COMPUTER INC
Size C
Project Name F3Sc
Rev 2.0
Date: 星期二, 十月 21, 2007
Sheet 25 of 93

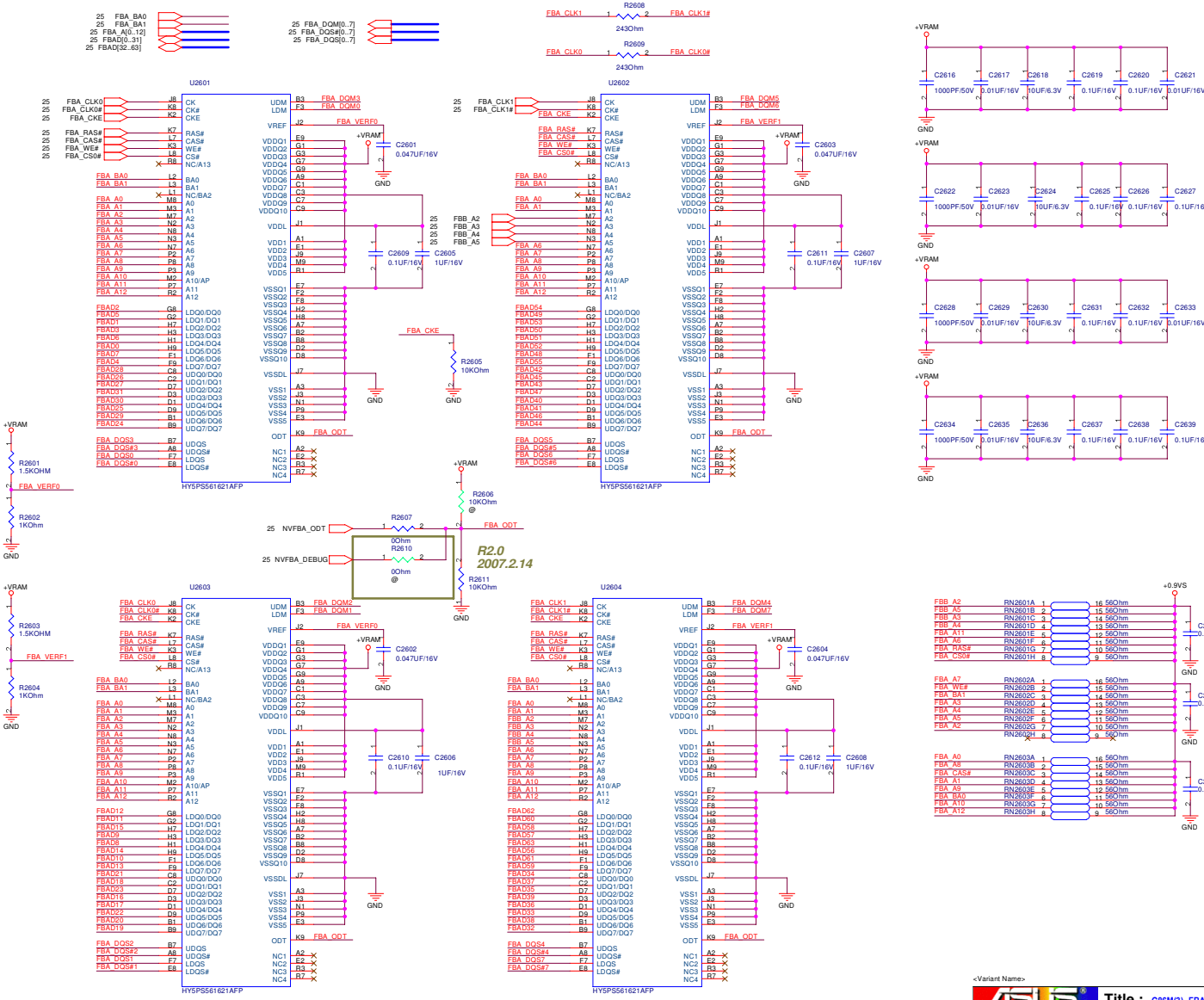
25 FBA_BA0
25 FBA_BA1
25 FBA_A[0..12]
25 FBAD[0..31]
25 FBAD[32..63]
25 FBA_DQM[0..7]
25 FBA_DQS#[0..7]
25 FBA_DQS[0..7]
FBA_CLK1
R2608
243Ohm
FBA_CLK1#
FBA_CLK0
R2609
243Ohm
FBA_CLK0#
+VRAM
C2616 C2617 C2618 C2619 C2620 C2621
1000PF/50V 0.01UF/16V 10UF/6.3V 0.1UF/16V 0.1UF/16V 0.01UF/16V
C2622 C2623 C2624 C2625 C2626 C2627
1000PF/50V 0.01UF/16V 10UF/6.3V 0.1UF/16V 0.1UF/16V 0.1UF/16V
C2628 C2629 C2630 C2631 C2632 C2633
1000PF/50V 0.01UF/16V 10UF/6.3V 0.1UF/16V 0.1UF/16V 0.01UF/16V
C2634 C2635 C2636 C2637 C2638 C2639
1000PF/50V 0.01UF/16V 10UF/6.3V 0.1UF/16V 0.1UF/16V 0.1UF/16V
GND
U2601
25 FBA_CLK0
25 FBA_CLK0#
25 FBA_CKE
25 FBA_RAS#
25 FBA_CAS#
25 FBA_WE#
25 FBA_CS0#
FBA_BA0
FBA_BA1
FBA_A0
FBA_A1
FBA_A2
FBA_A3
FBA_A4
FBA_A5
FBA_A6
FBA_A7
FBA_A8
FBA_A9
FBA_A10
FBA_A11
FBA_A12
FBAD2
FBAD5
FBAD1
FBAD3
FBAD6
FBAD0
FBAD7
FBAD4
FBAD28
FBAD26
FBAD27
FBAD31
FBAD30
FBAD25
FBAD29
FBAD24
FBA_DQS3
FBA_DQS#3
FBA_DQS0
FBA_DQS#0
FBA_DQM3
FBA_DQM0
FBA_VERF0
C2601
0.047UF/16V
C2609
0.1UF/16V
C2605
1UF/16V
25 FBB_A2
25 FBB_A3
25 FBB_A4
25 FBB_A5
FBA_A6
FBA_A7
FBA_A8
FBA_A9
FBA_A10
FBA_A11
FBA_A12
FBAD54
FBAD49
FBAD53
FBAD50
FBAD51
FBAD52
FBAD48
FBAD55
FBAD42
FBAD45
FBAD43
FBAD47
FBAD40
FBAD41
FBAD46
FBAD44
FBA_DQS5
FBA_DQS#5
FBA_DQS6
FBA_DQS#6
FBA_CKE
R2605
10KOhm
FBA_ODT
HY5PS561621AFP
U2602
25 FBA_CLK1
25 FBA_CLK1#
FBA_DQM5
FBA_DQM6
FBA_VERF1
C2603
0.047UF/16V
C2611
0.1UF/16V
C2607
1UF/16V
+VRAM
R2601
1.5KOHM
FBA_VERF0
R2602
1KOhm
GND
R2606
10KOhm
@
25 NVFBA_ODT
R2607
0Ohm
25 NVFBA_DEBUG
R2610
0Ohm
@
R2611
10KOhm
R2.0
2007.2.14
U2603
FBA_DQM2
FBA_DQM1
C2602
0.047UF/16V
C2610
0.1UF/16V
C2606
1UF/16V
R2603
1.5KOHM
R2604
1KOhm
U2604
FBA_DQM4
FBA_DQM7
C2604
0.047UF/16V
C2612
0.1UF/16V
C2608
1UF/16V
+0.9VS
FBB_A2
FBB_A5
FBB_A3
FBB_A4
FBA_A11
FBA_A6
FBA_RAS#
FBA_CS0#
RN2601A RN2601B RN2601C RN2601D RN2601E RN2601F RN2601G RN2601H
56Ohm
C2613
0.1UF/16V
FBA_A7
FBA_WE#
FBA_BA1
FBA_A3
FBA_A4
FBA_A5
FBA_A2
RN2602A RN2602B RN2602C RN2602D RN2602E RN2602F RN2602G RN2602H
C2614
0.1UF/16V
FBA_A0
FBA_A8
FBA_CAS#
FBA_A1
FBA_A9
FBA_BA0
FBA_A10
FBA_A12
RN2603A RN2603B RN2603C RN2603D RN2603E RN2603F RN2603G RN2603H
C2615
0.1UF/16V
HY5PS561621AFP

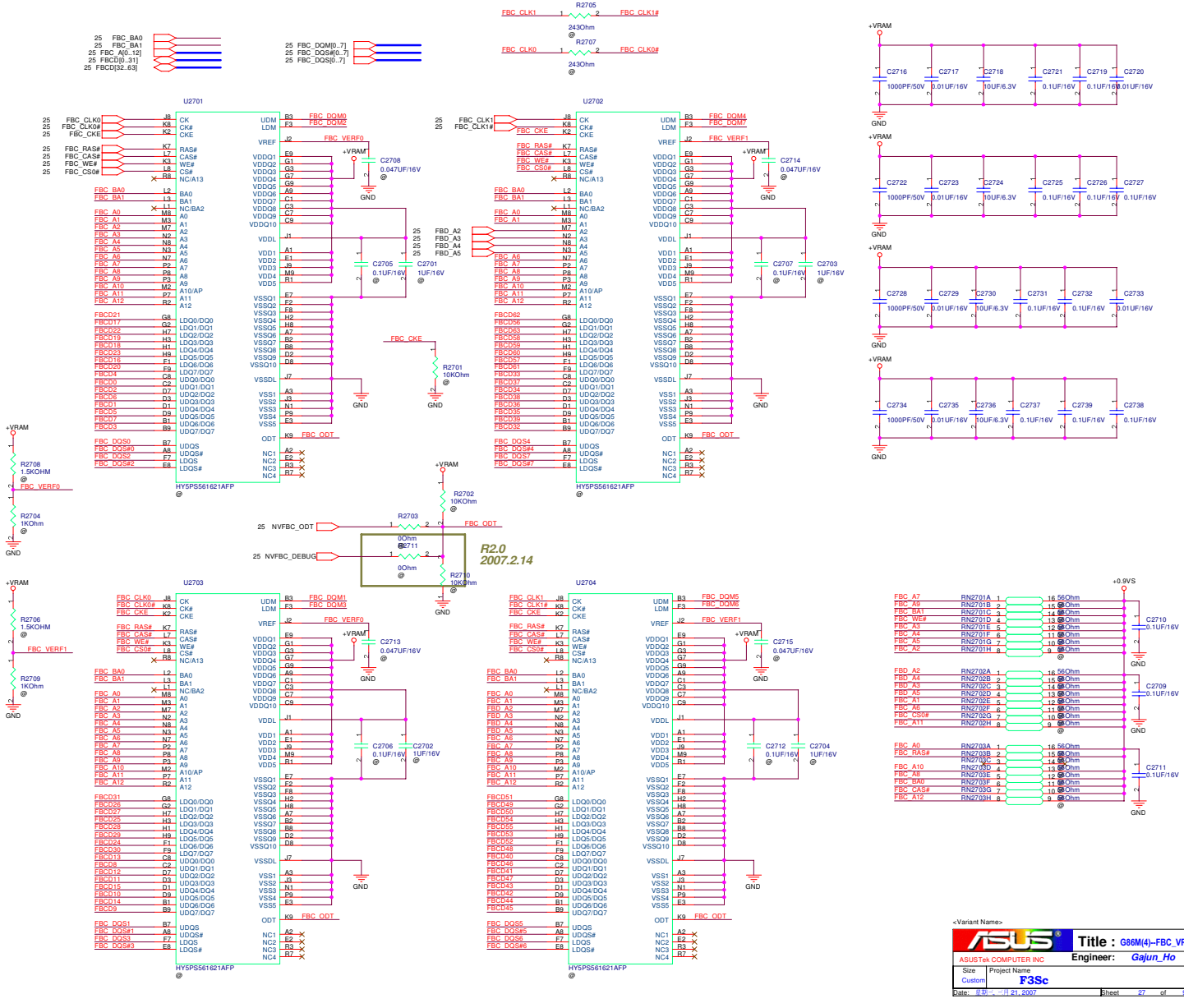
25 FBC_BA0
25 FBC_BA1
25 FBC_A[0..12]
25 FBCD[0..31]
25 FBCD[32..63]
25 FBC_DQM[0..7]
25 FBC_DQS#[0..7]
25 FBC_DQS[0..7]
FBC_CLK1
R2705
243Ohm
FBC_CLK1#
FBC_CLK0
R2707
243Ohm
FBC_CLK0#
+VRAM
C2716 1000PF/50V
C2717 0.01UF/16V
C2718 10UF/6.3V
C2721 0.1UF/16V
C2719 0.1UF/16V
C2720 0.01UF/16V
C2722 1000PF/50V
C2723 0.01UF/16V
C2724 10UF/6.3V
C2725 0.1UF/16V
C2726 0.1UF/16V
C2727 0.1UF/16V
C2728 1000PF/50V
C2729 0.01UF/16V
C2730 10UF/6.3V
C2731 0.1UF/16V
C2732 0.1UF/16V
C2733 0.01UF/16V
C2734 1000PF/50V
C2735 0.01UF/16V
C2736 10UF/6.3V
C2737 0.1UF/16V
C2739 0.1UF/16V
C2738 0.1UF/16V
GND
U2701
HY5PS561621AFP
FBC_DQM0
FBC_DQM2
FBC_VERF0
C2708 0.047UF/16V
C2705 0.1UF/16V
C2701 1UF/16V
FBC_CKE
R2701 10KOhm
R2708 1.5KOHM
R2704 1KOhm
R2702 10KOhm
25 NVFBC_ODT
FBC_ODT
R2703 0Ohm
25 NVFBC_DEBUG
R2711 0Ohm
R2710 10KOhm
R2.0
2007.2.14
U2702
FBC_DQM4
FBC_DQM7
FBC_VERF1
C2714 0.047UF/16V
C2707 0.1UF/16V
C2703 1UF/16V
25 FBD_A2
25 FBD_A3
25 FBD_A4
25 FBD_A5
R2706 1.5KOHM
R2709 1KOHM
U2703
FBC_DQM1
FBC_DQM3
C2713 0.047UF/16V
C2706 0.1UF/16V
C2702 1UF/16V
U2704
FBC_DQM5
FBC_DQM6
C2715 0.047UF/16V
C2712 0.1UF/16V
C2704 1UF/16V
+0.9VS
RN2701A 56Ohm
RN2701B 56Ohm
RN2701C 56Ohm
RN2701D 56Ohm
RN2701E 56Ohm
RN2701F 56Ohm
RN2701G 56Ohm
RN2701H 56Ohm
C2710 0.1UF/16V
RN2702A 56Ohm
RN2702B 56Ohm
RN2702C 56Ohm
RN2702D 56Ohm
RN2702E 56Ohm
RN2702F 56Ohm
RN2702G 56Ohm
RN2702H 56Ohm
C2709 0.1UF/16V
RN2703A 56Ohm
RN2703B 56Ohm
RN2703C 56Ohm
RN2703D 56Ohm
RN2703E 56Ohm
RN2703F 56Ohm
RN2703G 56Ohm
RN2703H 56Ohm
C2711 0.1UF/16V
FBC_A7
FBC_A9
FBC_BA1
FBC_WE#
FBC_A3
FBC_A4
FBC_A5
FBC_A2
FBC_A0
FBC_RAS#
FBC_A8
FBC_A10
FBC_CS0#
FBC_A12
FBC_A11
FBC_BA0
FBC_A1
FBC_A6
FBC_CAS#
FBC_A2
FBC_A11
<Variant Name>
ASUSTek COMPUTER INC
Title : G86M(4)-FBC_VRAM_C
Engineer: Gajun_Ho
Size Custom
Project Name F3Sc
Rev 2.0
Date: 星期一, 一月 21, 2007
Sheet 27 of 95

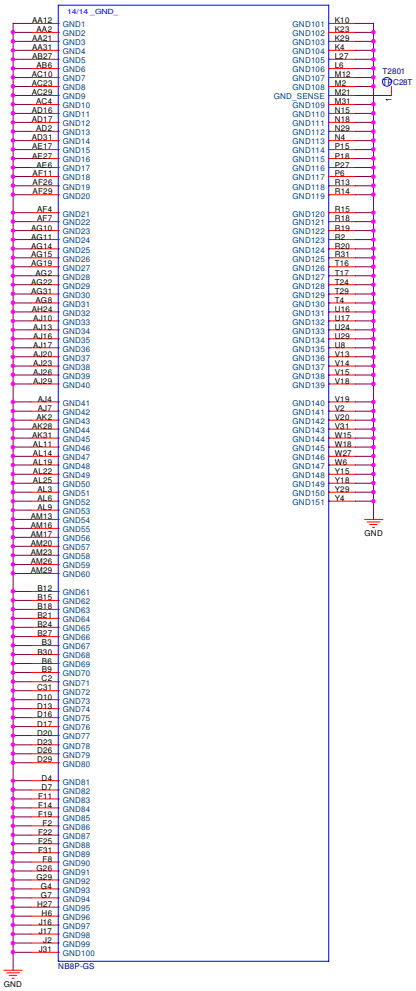

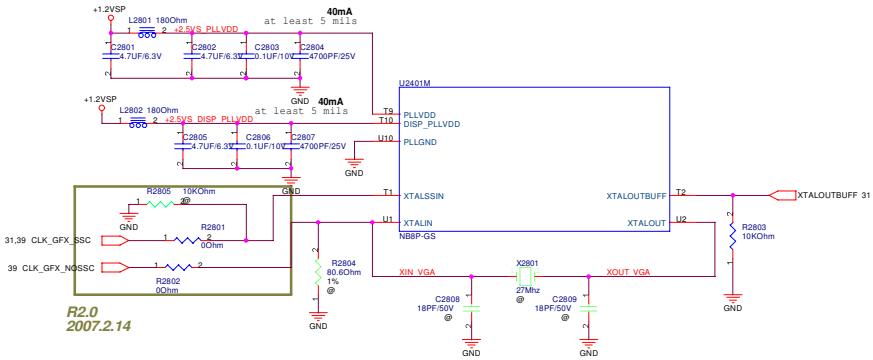

R2.0
2007.2.14

TYPE	R2801	R2802	X2801, C2873, C2874
CLK_GFX_NOSSC		mount	
CLK_GFX_SSC	mount		
Crystal			mount

ASUSTek COMPUTER INC

Title : G86M(5)-GND&Decoupling

Engineer: Gajun_Ho

Size	Project Name	Rev
Custom	F3Sc	2.0

Date: 星期二, 三月 21, 2007 Sheet 28 of 95

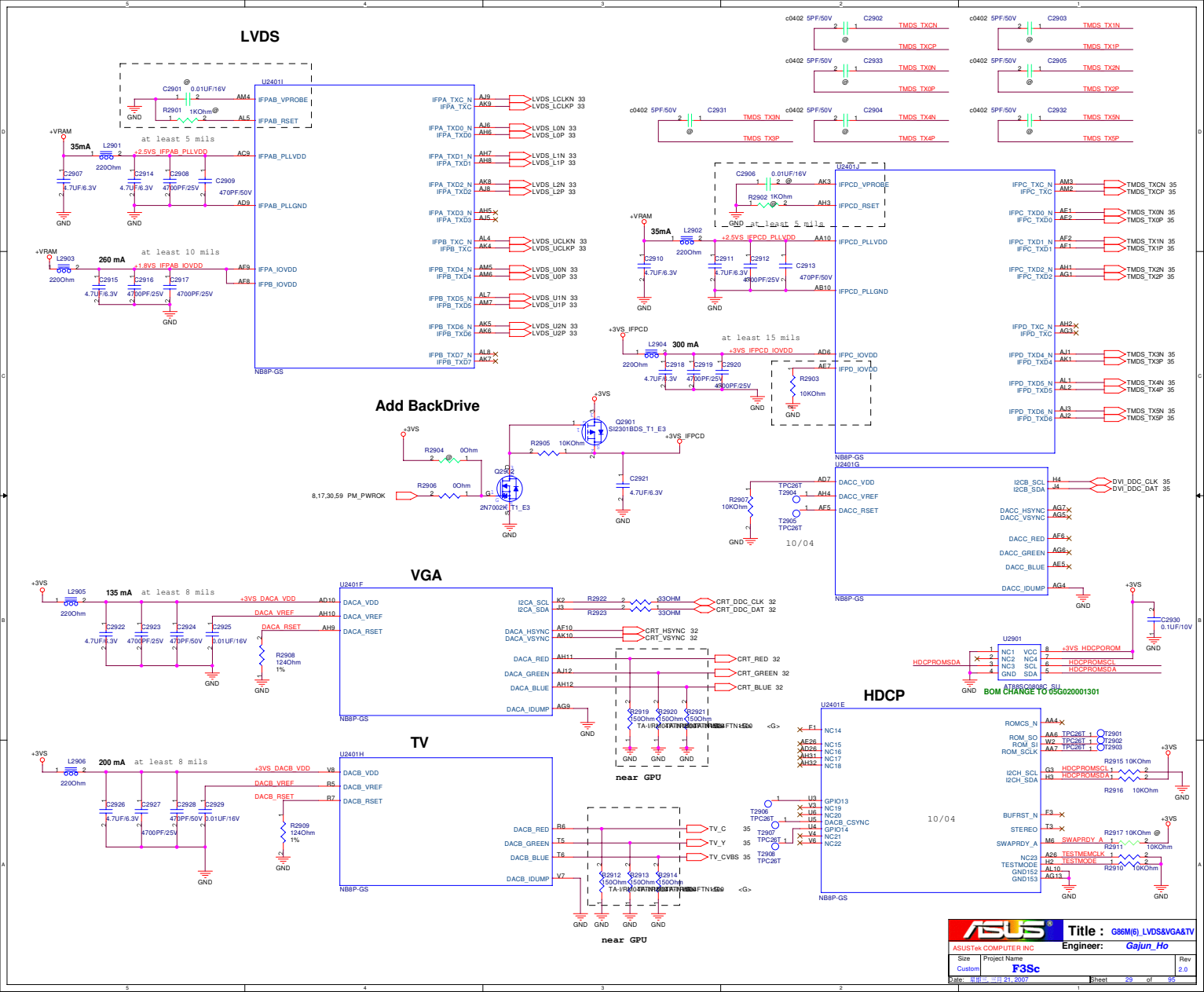
LVDS
Add BackDrive
VGA
TV
HDCP
U2401I
U2401J
U2401G
U2401F
U2401H
U2401E
U2901
NB8P-GS
near GPU
BOM CHANGE TO 05G020001301
Title : G86M(6)_LVDS&VGA&TV
ASUSTek COMPUTER INC
Engineer: Gajun_Ho
Size Custom
Project Name F3Sc
Rev 2.0
Date: 星期三, 三月 21, 2007
Sheet 29 of 95

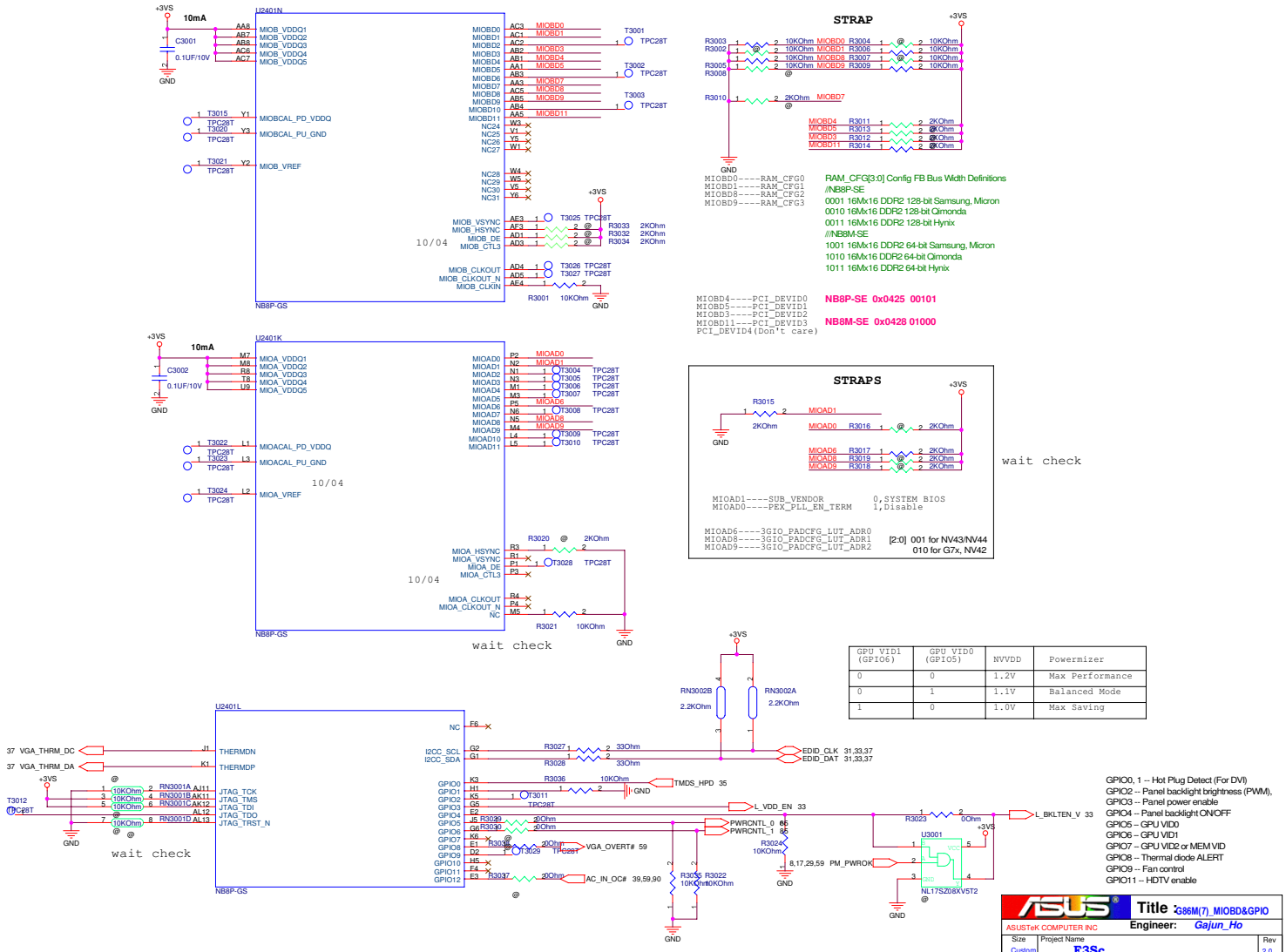

GPU_VID1 (GPIO6)	GPU_VID0 (GPIO5)	NVVDD	Powermizer
0	0	1.2V	Max Performance
0	1	1.1V	Balanced Mode
1	0	1.0V	Max Saving

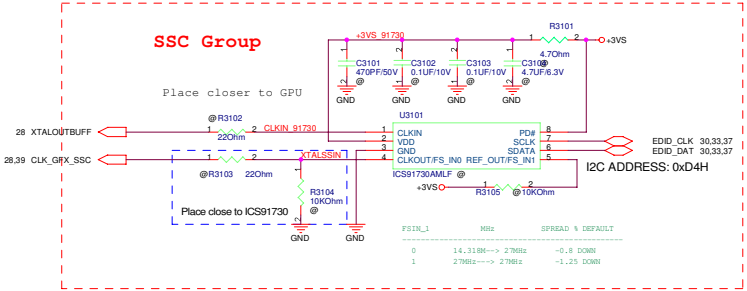

ASUSTeK COMPUTER INC	Title : G86M(8)-SSC	
	Engineer: Gajun_Ho	
Size: Custom	Project Name: F3Sc	Rev: 2.0
Date: 星期三, 三月 21, 2007	Sheet 31 of 95	

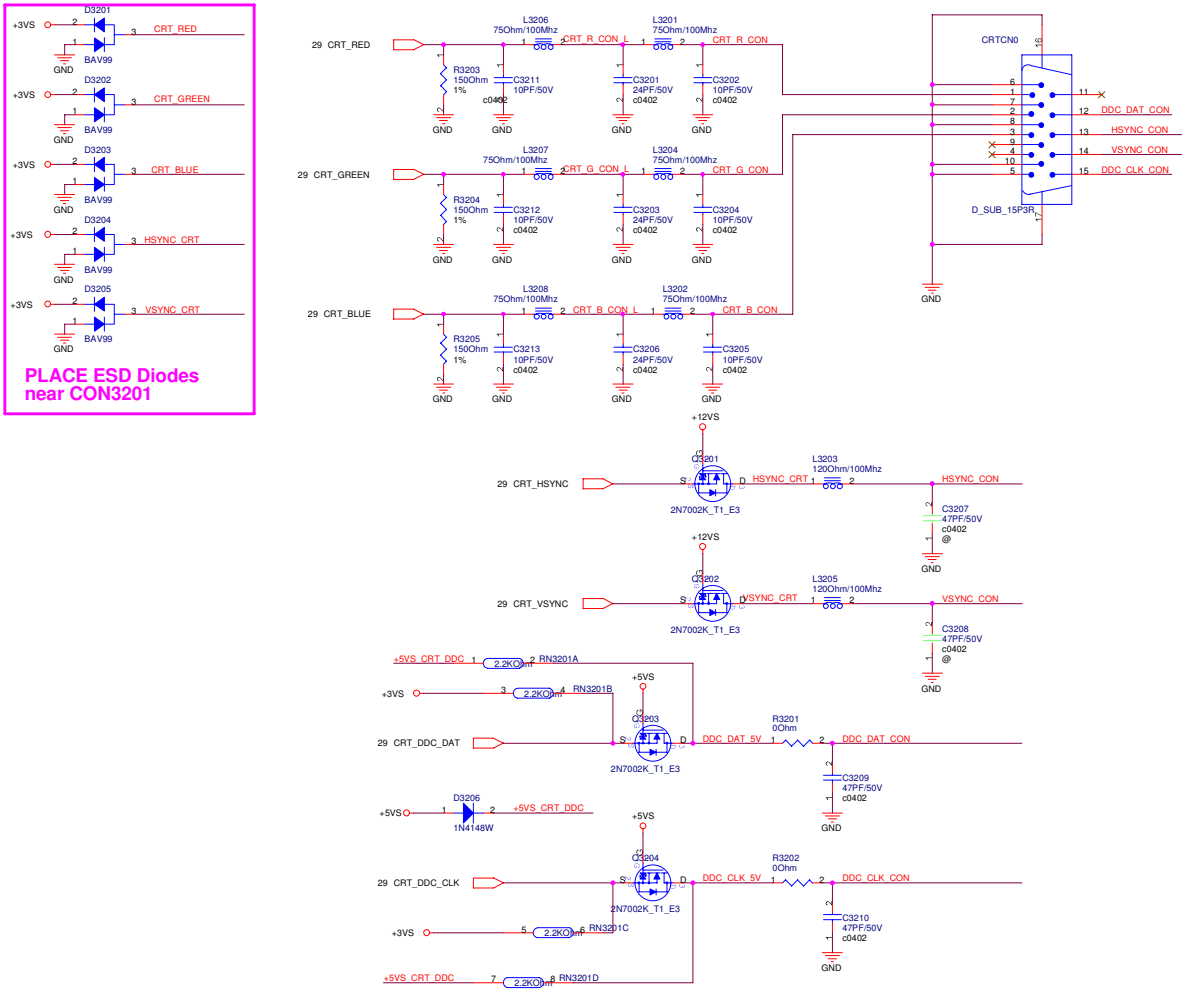

ASUSTeK COMPUTER INC	Title : CRT	Engineer: Gajun_Ho
Size: Custom	Project Name: F3Sc	Rev: 2.0
Date: 星期三, 三月 21, 2007	Sheet 32 of 95	

LCD Power

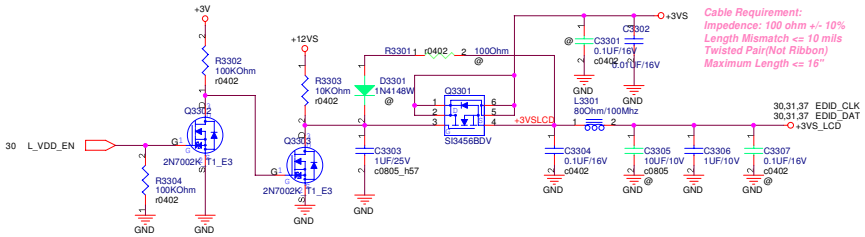

Cable Requirement:
Impedence: 100 ohm +/- 10%
Length Mismatch <= 10 mils
Twisted Pair(Not Ribbon)
Maximum Length <= 16"

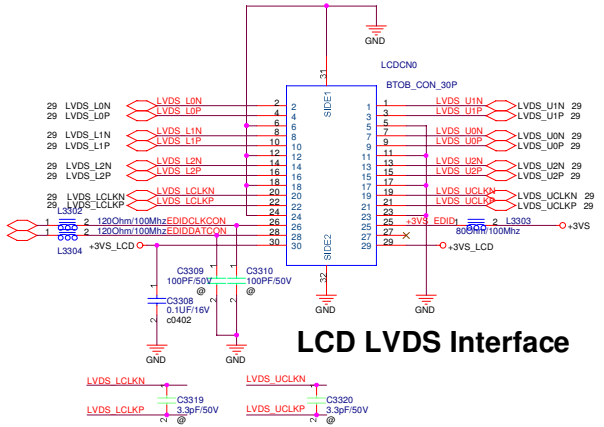

LCD LVDS Interface

LCD Backlight Control

INVERTER Interface/Speaker CONN.

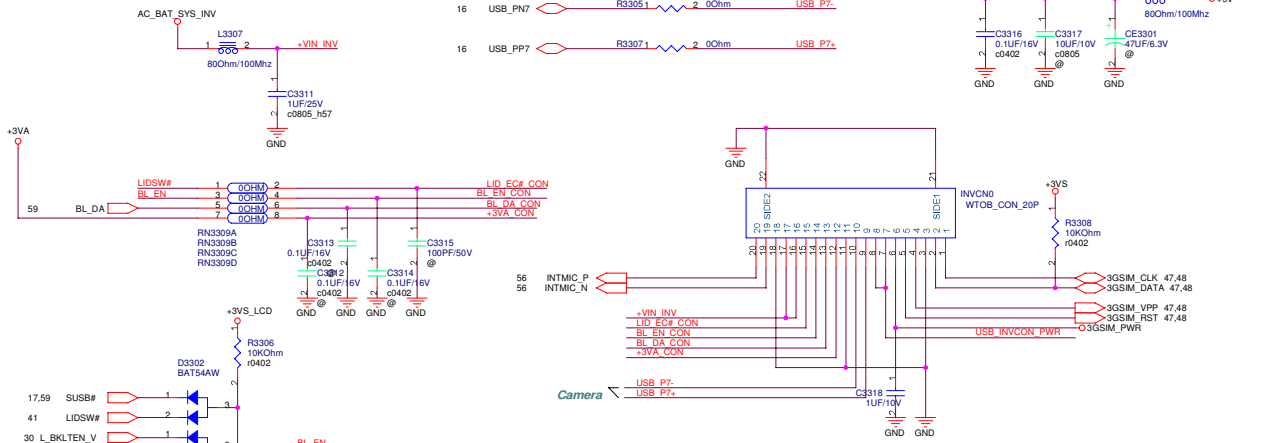

ASUSTeK COMPUTER INC	Title : LVDS & INVERTER	
	Engineer: Gajun_Ho	
Size: Custom	Project Name: F3Sc	Rev: 2.0
Date: 星期三, 三月 21, 2007	Sheet 33 of 95	

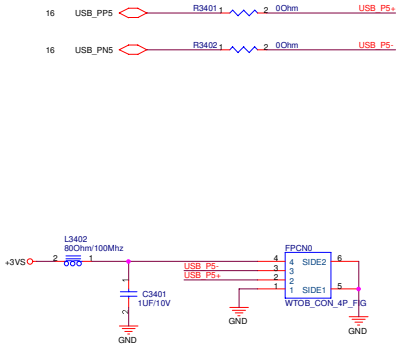

<Variant Name>

ASUSTeK COMPUTER INC	Title : FINGER PRINT		
	Engineer: Jack Chen		
Size: Custom	Project Name: F3Sc		Rev: 2.0
Date: 星期三, 二月 21, 2007	Sheet 34 of 95		

TV OUT

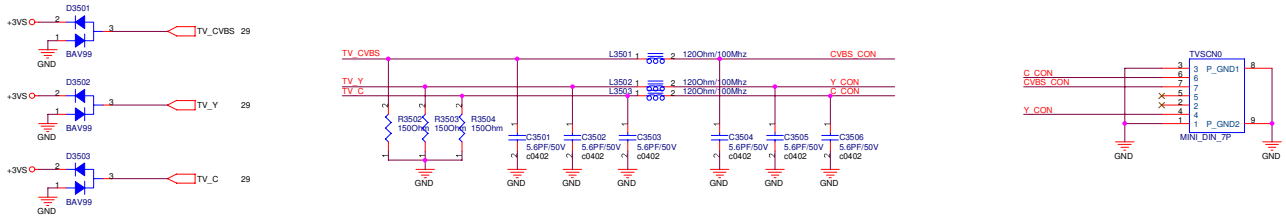

PLACE ESD
Diodes near
TV port

DVI

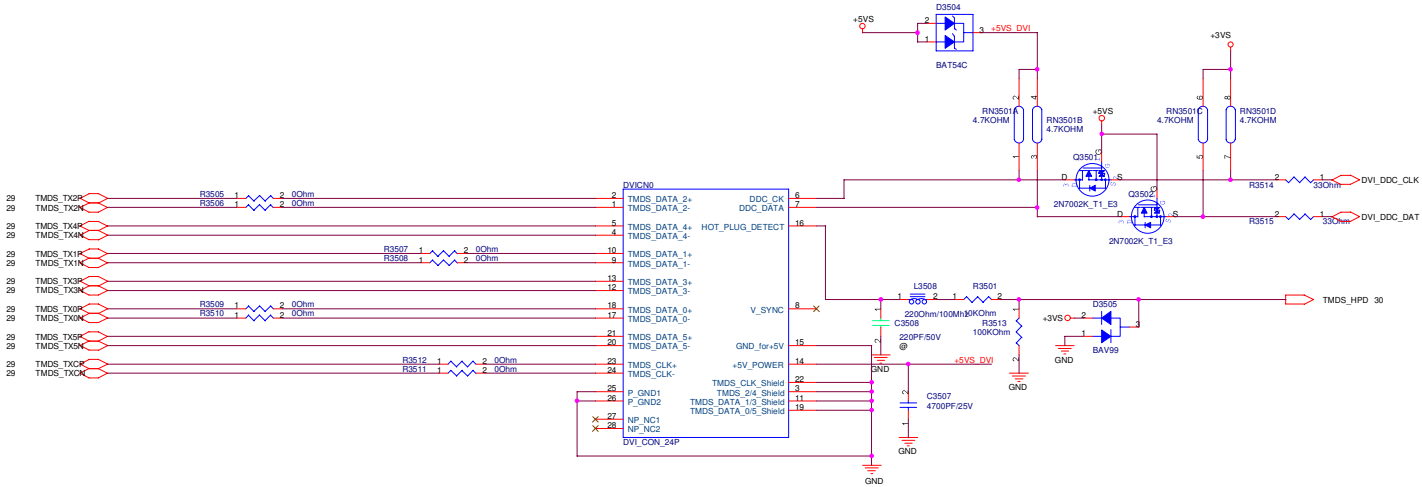

<Variant Name>

ASUSTeK COMPUTER INC	Title : TV OUT & DVI CON.	
	Engineer: Gajun_Ho	
Size: Custom	Project Name: F3Sc	Rev: 2.0
Date: 星期三, 二月 21, 2007	Sheet 35 of 95	

<Variant Name>

ASUSTeK COMPUTER INC	Title : Schematic page name	
	Engineer: Gajun_Ho	
Size: Custom	Project Name: F3Sc	Rev: 2.0
Date: 星期三, 三月 21, 2007	Sheet 36 of 95	

Thermal Sensor

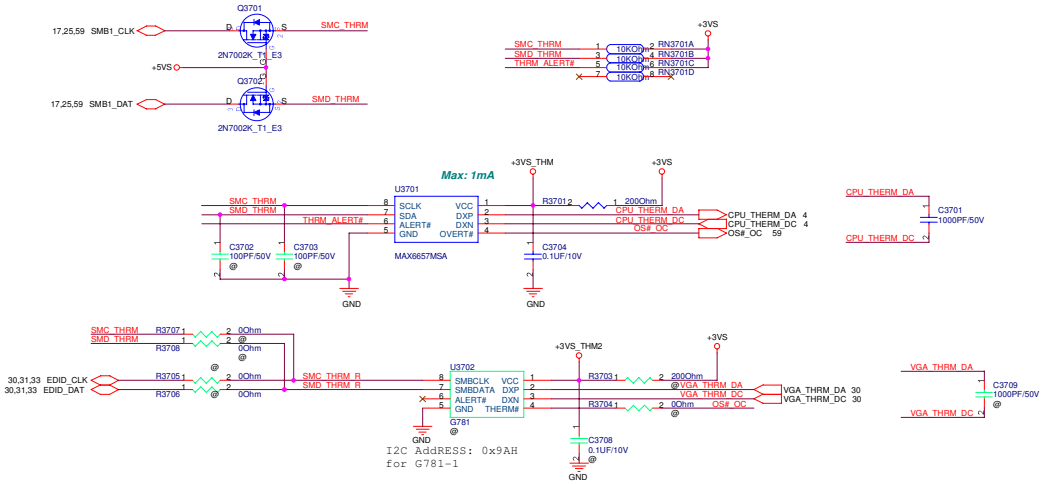

DC FAN Control

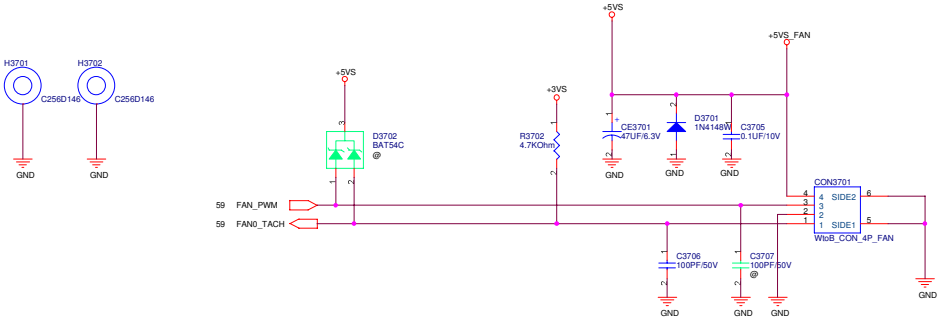

<Variant Name>

ASUSTeK COMPUTER INC. NB1	Title : THER SENSOR & FAN	
	Engineer: Gajun_Ho	
Size: Custom	Project Name: F3Sc	Rev: 2.0
Date: 星期三, 二月 21, 2007	Sheet 37 of 95	

<Variant Name>

ASUSTeK COMPUTER INC	Title : Schematic page name		
	Engineer: Gajun_Ho		
Size: Custom	Project Name: F3Sc		Rev: 2.0
Date: 星期三, 三月 21, 2007	Sheet 38 of 95		

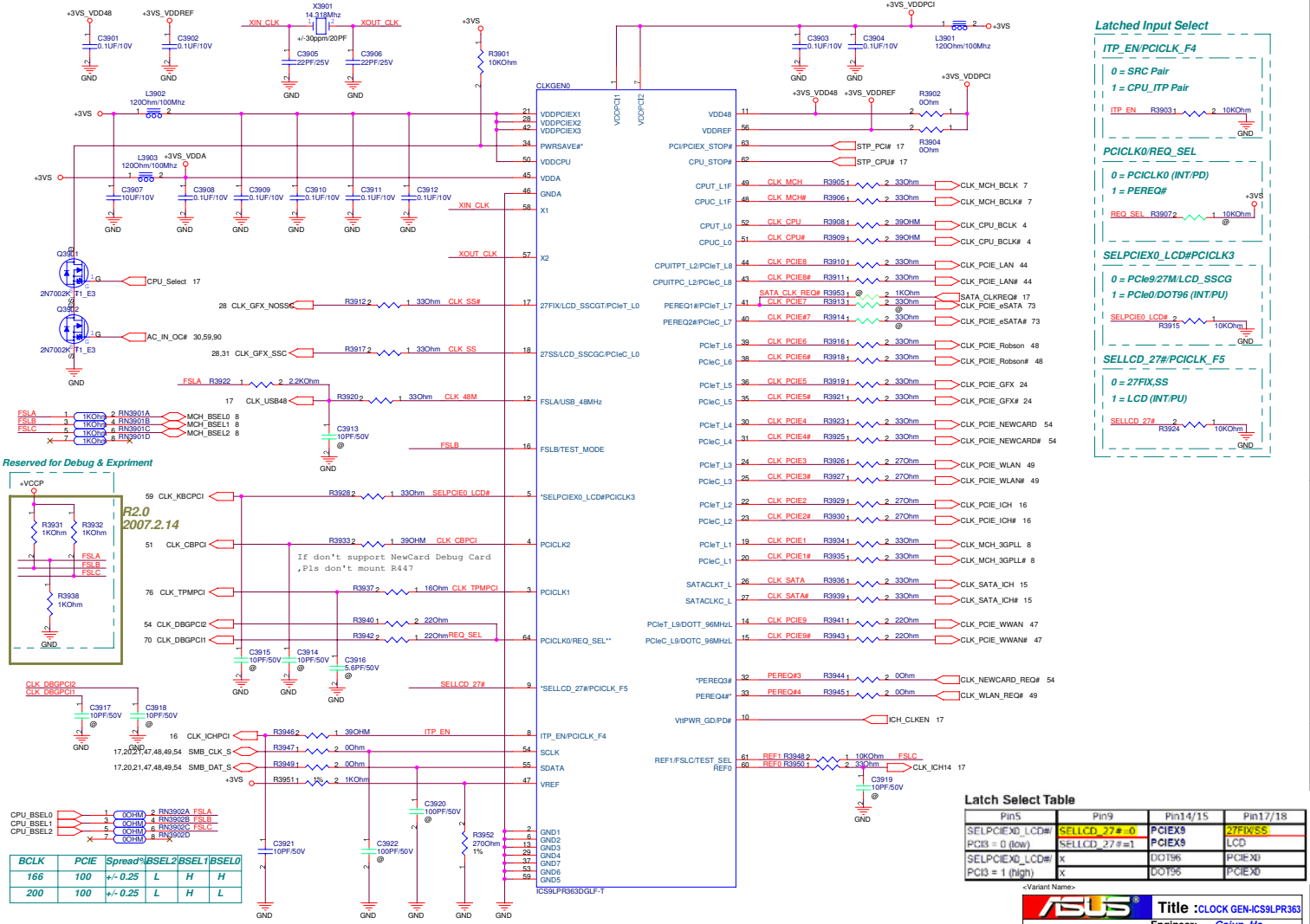

BCLK	PCIE	Spread%	BSEL2	BSEL1	BSEL0
166	100	+/- 0.25	L	H	H
200	100	+/- 0.25	L	H	L

Latch Select Table

Pin5	Pin9	Pin14/15	Pin17/18
SELPCIEX0_LCD#/ PCI3 = 0 (low)	SELLCD_27#=0	PCIEX9	27FIX/SS
	SELLCD_27#=1	PCIEX9	LCD
SELPCIEX0_LCD#/ PCI3 = 1 (high)	X	DOT96	PCIEX0
	X	DOT96	PCIEX0

<Variant Name>

ASUSTeK COMPUTER INC. NB1

Title : CLOCK GEN-ICS9LPR363

Engineer: Gajun_Ho

Size	Project Name	Rev
Custom	F3Sc	2.0

Date: 星期二, 三月 21, 2007 Sheet 39 of 95

<Variant Name>

ASUSTeK COMPUTER INC	Title : Schematic page name	
	Engineer: Gajun_Ho	
Size: Custom	Project Name: F3Sc	Rev: 2.0
Date: 星期三, 三月 21, 2007	Sheet 40 of 95	

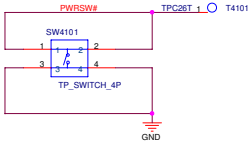

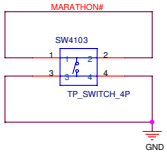

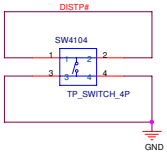

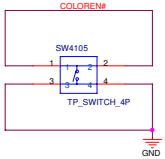

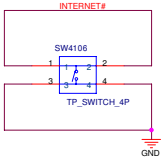

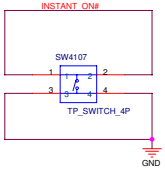

R1.1 2006.12.8

For Switch

PWR SWITCH

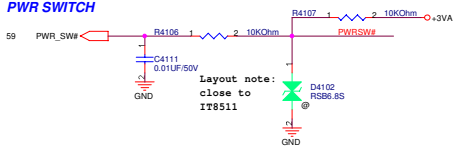

LID SWITCH

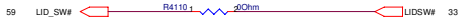

RF ON SWITCH

SHUT_DOWN#

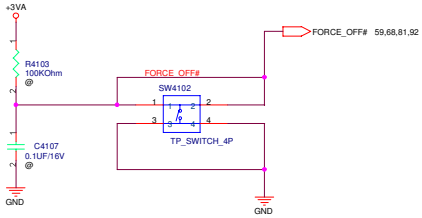

R1.1 2006.12.8

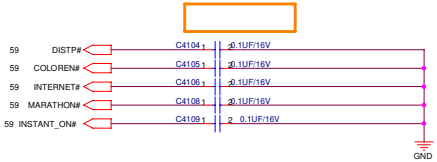

Note:

This LID_EC# is a signal from inverter board, it is easy to cause high voltage damage when plugging inverter board connector to M/B with AC present. It needed to add bidirectional diode to protect this pin.

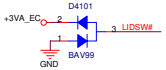

Layout note:
close to
connector

<Variant Name>

ASUSTeK COMPUTER INC	Title : Power on & Res Freq	
	Engineer: Gajun_Ho	
Size: Custom	Project Name: F3Sc	Rev: 2.0
Date: 星期三, 二月 21, 2007	Sheet 41 of 95	

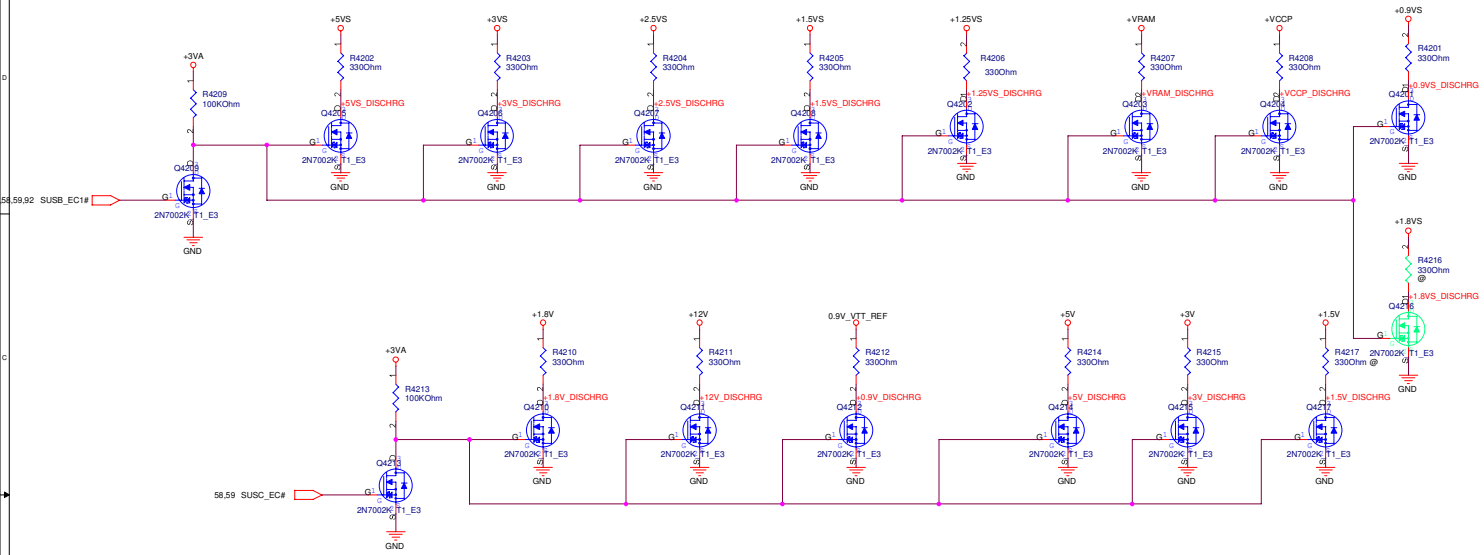

<Variant Name>

ASUSTeK COMPUTER INC. NB1	Title : DISCHARGE & EMI CAP	
	Engineer: Gajun_Ho	
Size: Custom	Project Name: F3Sc	Rev: 2.0
Date: 星期三, 二月 21, 2007	Sheet 42 of 95	

<Variant Name>

ASUSTeK COMPUTER INC	Title : Schematic page name		
	Engineer: Gajun_Ho		
Size: Custom	Project Name: F3Sc		Rev: 2.0
Date: 星期三, 三月 21, 2007	Sheet 43 of 95		

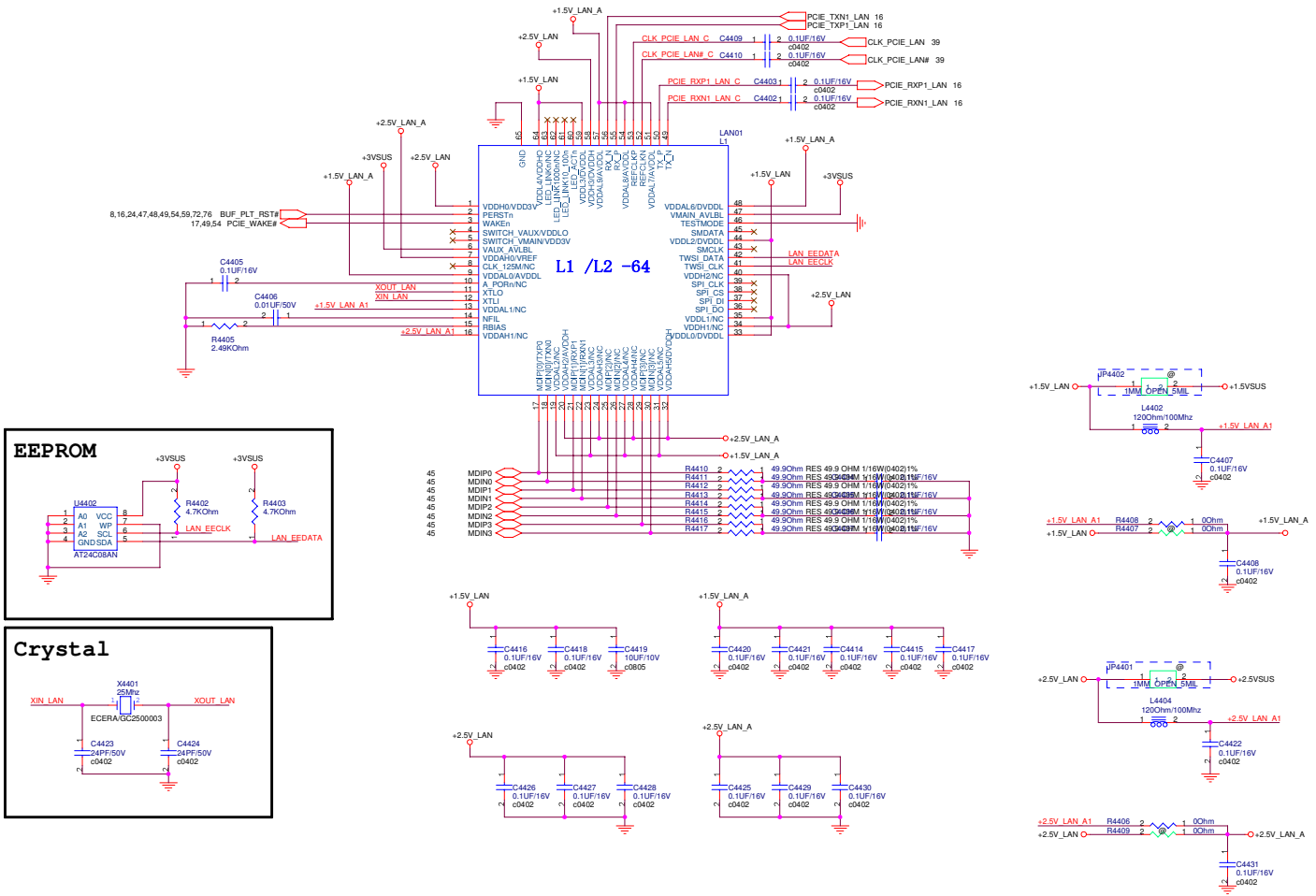

<Variant Name>

ASUS	Title : LAN-L1	
ASUSTeK COMPUTER INC. NB1	Engineer: Gajun_Ho	
Size: Custom	Project Name: F3Sc	Rev: 2.0
Date: 星期三, 三月 21, 2007	Sheet 44 of 95	

Change to
13GN7510M270

MDC CONN.

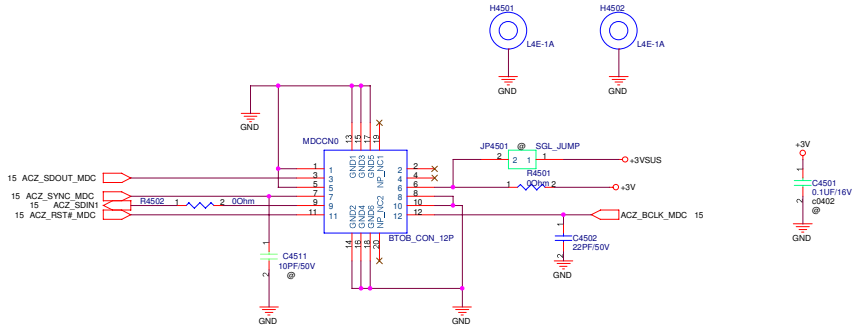

LAN CONN.

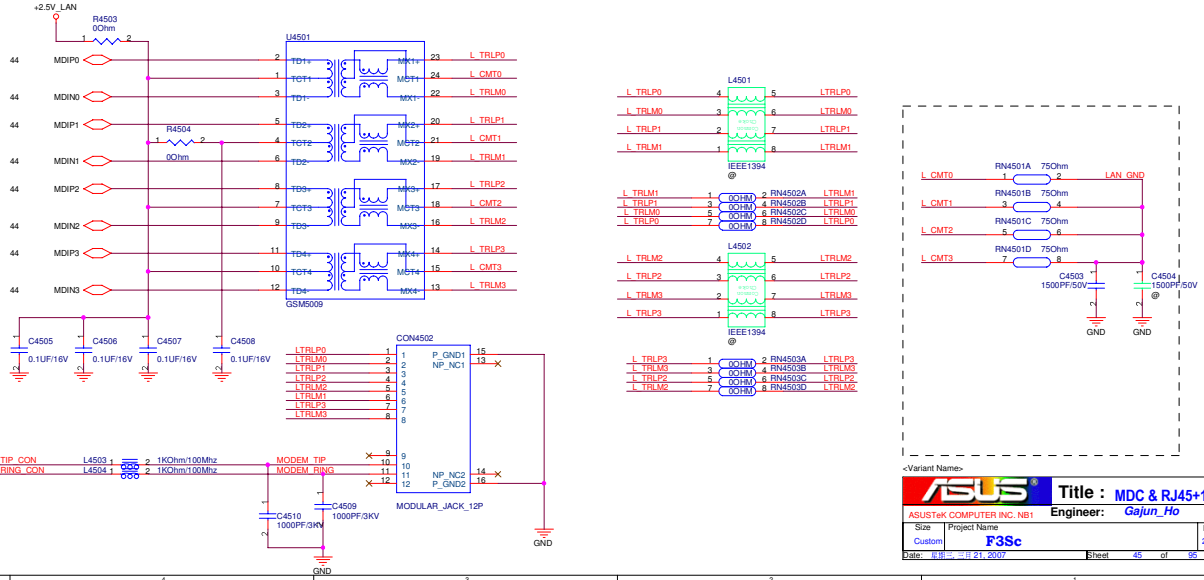

<Variant Name>

ASUSTeK COMPUTER INC. NB1	Title : MDC & RJ45+11		
	Engineer: Gajun_Ho		
Size: Custom	Project Name: F3Sc		Rev: 2.0
Date: 星期三, 三月 21, 2007	Sheet 45 of 95		

<Variant Name>

ASUSTeK COMPUTER INC	Title : Schematic page name		
	Engineer: Gajun_Ho		
Size: Custom	Project Name: F3Sc		Rev: 2.0
Date: 星期三, 三月 21, 2007	Sheet 46 of 95		

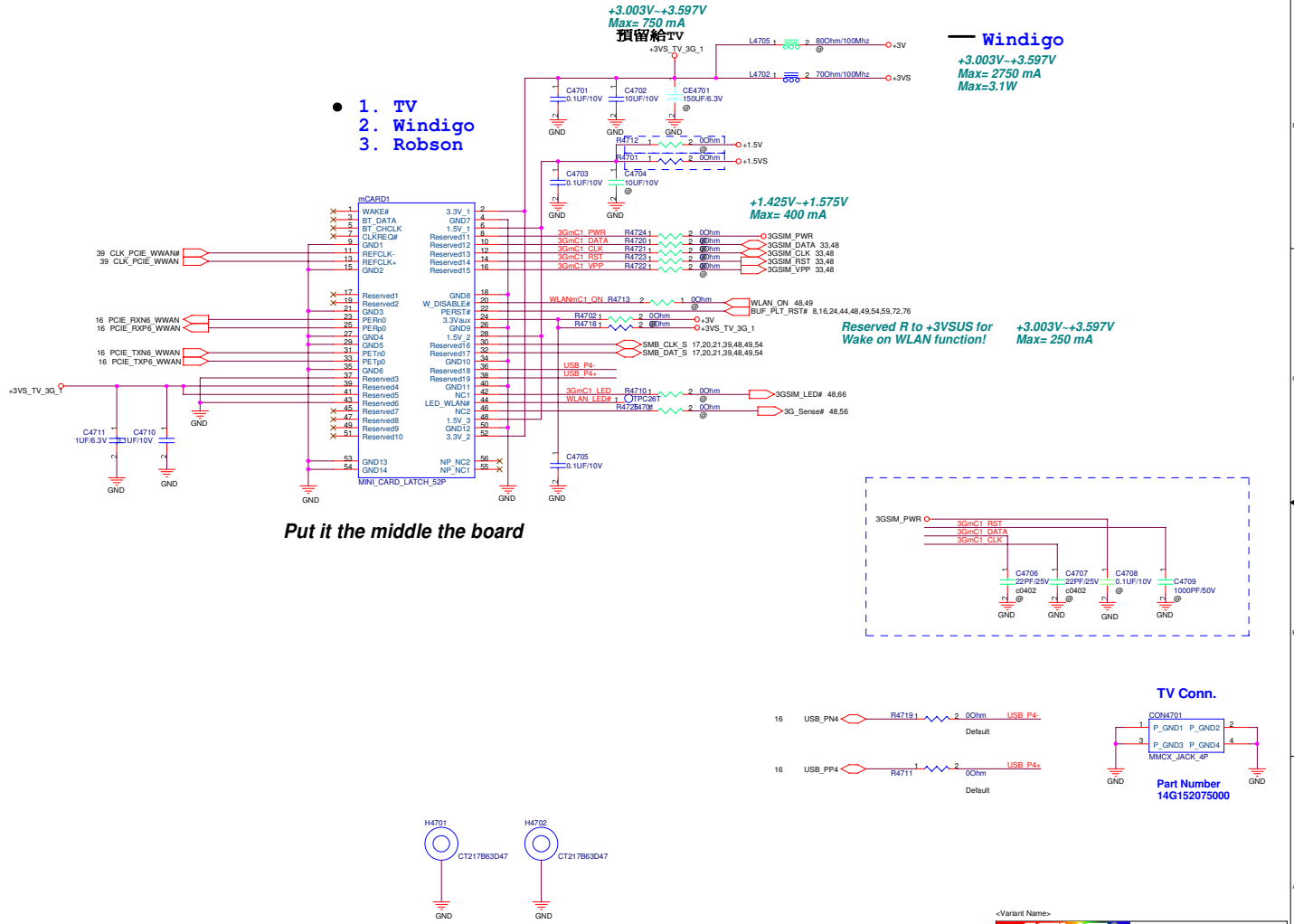
+3.003V~+3.597V
Max= 750 mA
預留給TV
Windigo
+3.003V~+3.597V
Max= 2750 mA
Max=3.1W
1. TV
2. Windigo
3. Robson
+1.425V~+1.575V
Max= 400 mA
Reserved R to +3VSUS for
Wake on WLAN function!
+3.003V~+3.597V
Max= 250 mA
mCARD1
MINI_CARD_LATCH_52P
Put it the middle the board
TV Conn.
CON4701
MMCX_JACK_4P
Part Number
14G152075000
Change H4701,H4702 "13G021043011"
from BOM file.
Title MINI CARD-TV/Windigo
ASUSTeK COMPUTER INC. NB1
Engineer: Gajun_Ho
Size Custom
Project Name F3Sc
Rev 2.0
Date: 星期三, 三月 21, 2007
Sheet 47 of 95

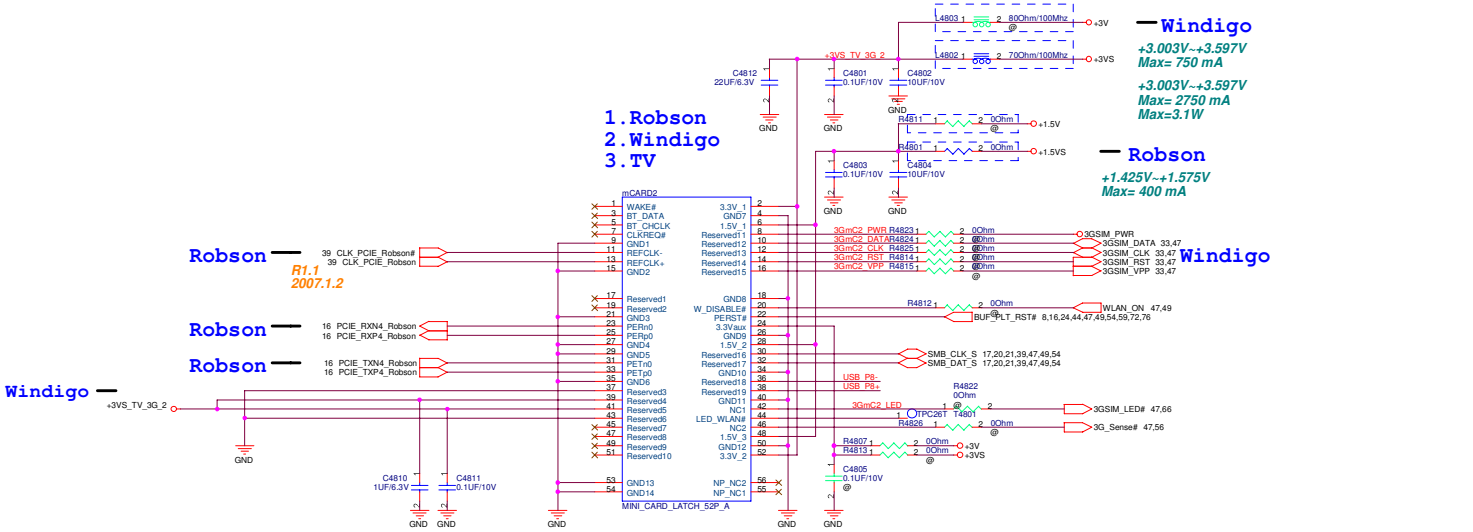

The top side depends on CD-ROM connect to put the board

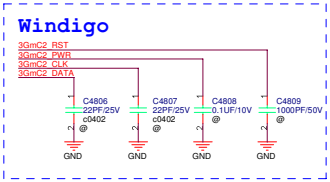

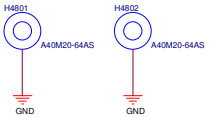

<Variant Name>

ASUSTeK COMPUTER INC. NB1	Title : MINI CARD-Robson	
	Engineer: Gajun_Ho	
Size: Custom	Project Name: F3Sc	Rev: 2.0
Date: 星期三, 二月 21, 2007	Sheet 48 of 95	

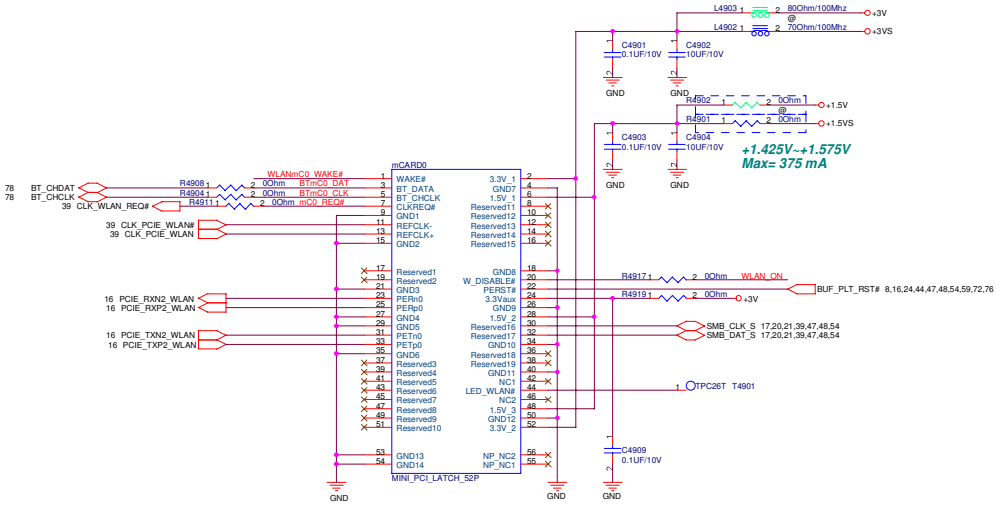

The left side depends on TV connect to put the board

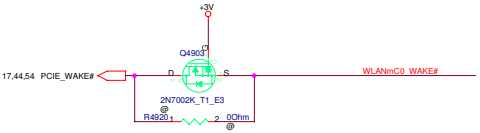

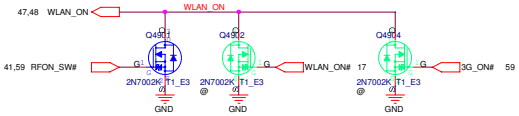

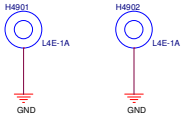

<Variant Name>

ASUSTeK COMPUTER INC. NB1	Title : MINI CARD-Kedron	
	Engineer: Gajun_Ho	
Size: Custom	Project Name: F3Sc	Rev: 2.0
Date: 星期三, 二月 21, 2007	Sheet 49 of 95	

<Variant Name>

ASUSTeK COMPUTER INC	Title : Schematic page name		
	Engineer: Gajun_Ho		
Size	Project Name		Rev
Custom	F3Sc		2.0
Date: 星期二, 三月 21, 2007		Sheet 50 of 95	

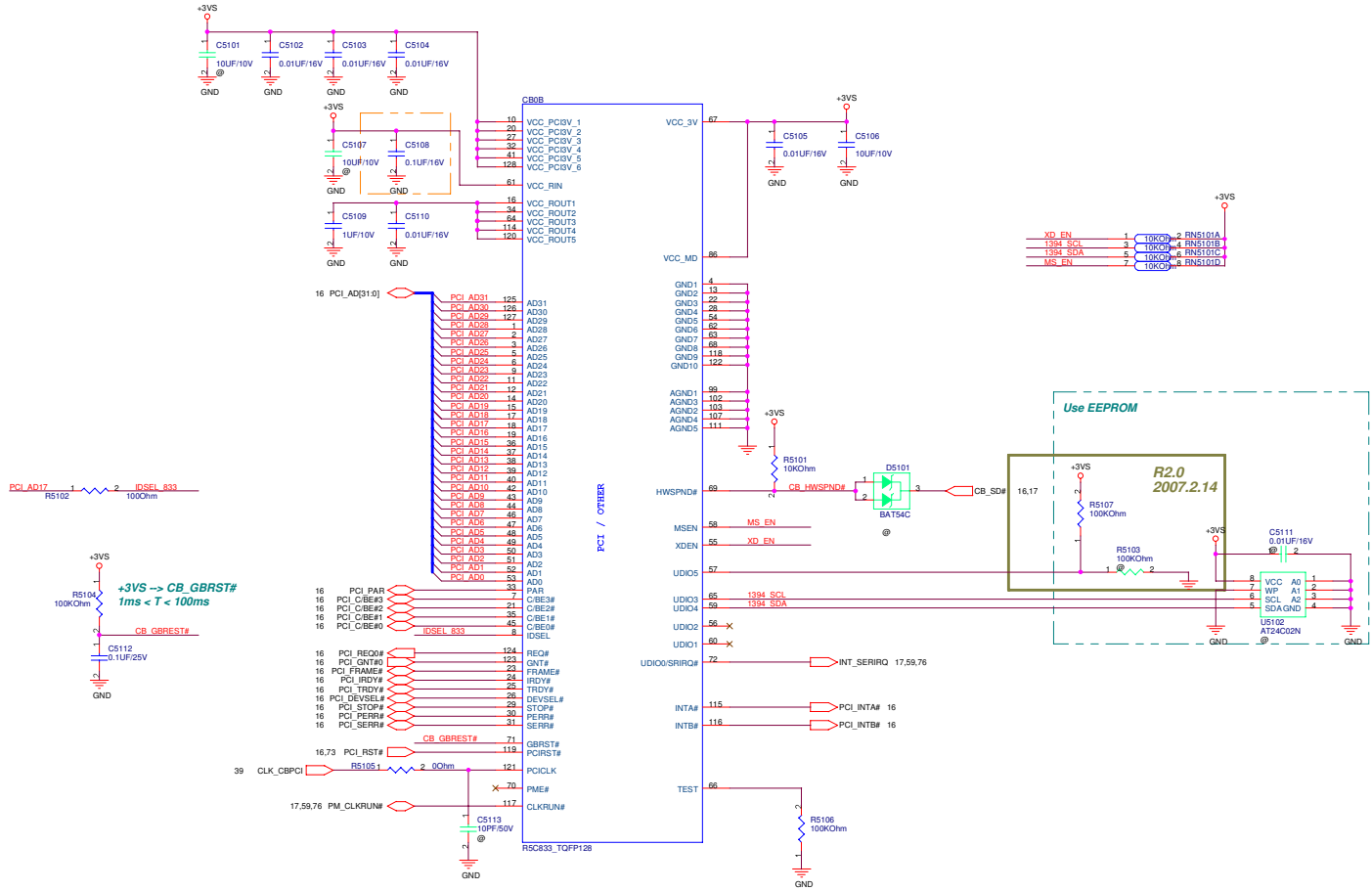

<Variant Name>

ASUSTeK COMPUTER INC. NB1	Title : CARD1394-R5C833(1)	
	Engineer: Gajun_Ho	
Size: Custom	Project Name: F3Sc	Rev: 2.0
Date: 星期三, 二月 21, 2007	Sheet 51 of 95	

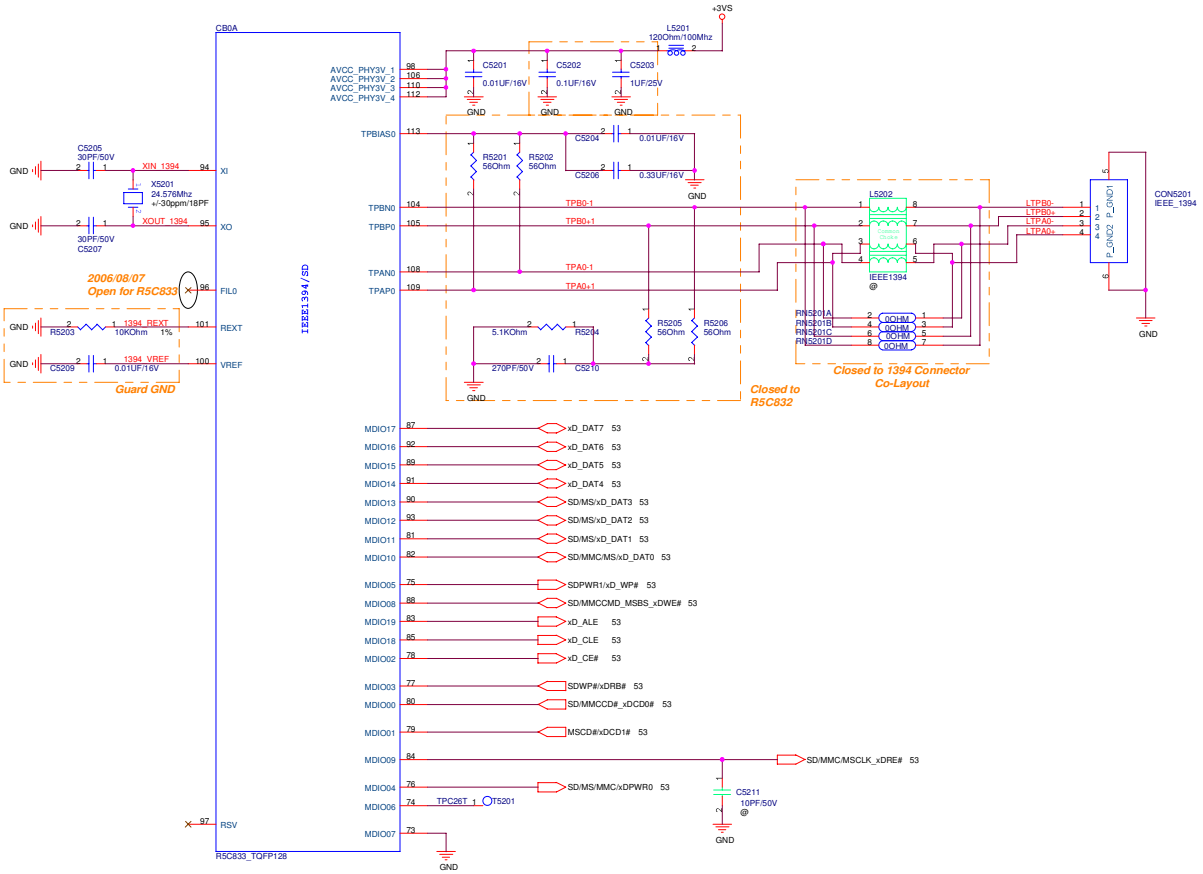

<Variant Name>

ASUSTeK COMPUTER INC. NB1	Title : CARD1394-R5C832(2)	
	Engineer: Gajun_Ho	
Size: Custom	Project Name: F3Sc	Rev: 2.0
Date: 星期三, 二月 21, 2007	Sheet 52 of 95	

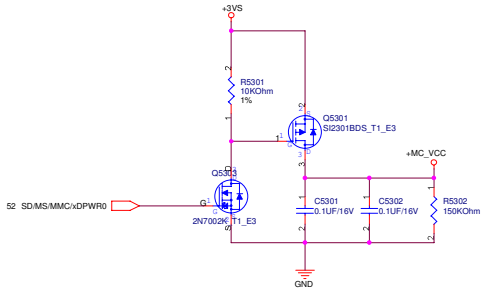

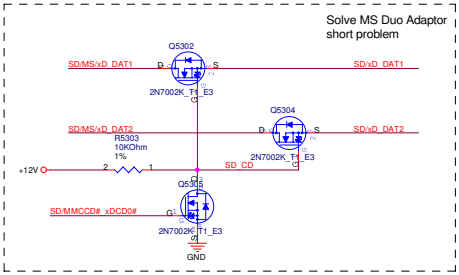

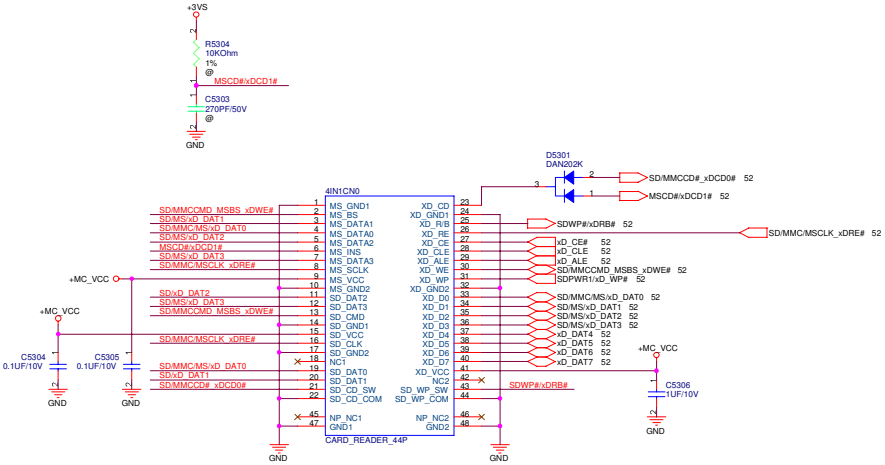

<Variant Name>

ASUSTeK COMPUTER INC	Title : 4 in 1 CARD READER	Engineer: Gajun_Ho	
Size: Custom	Project Name: F3Sc		Rev: 2.0
Date: 星期三, 二月 21, 2007	Sheet 53 of 95		

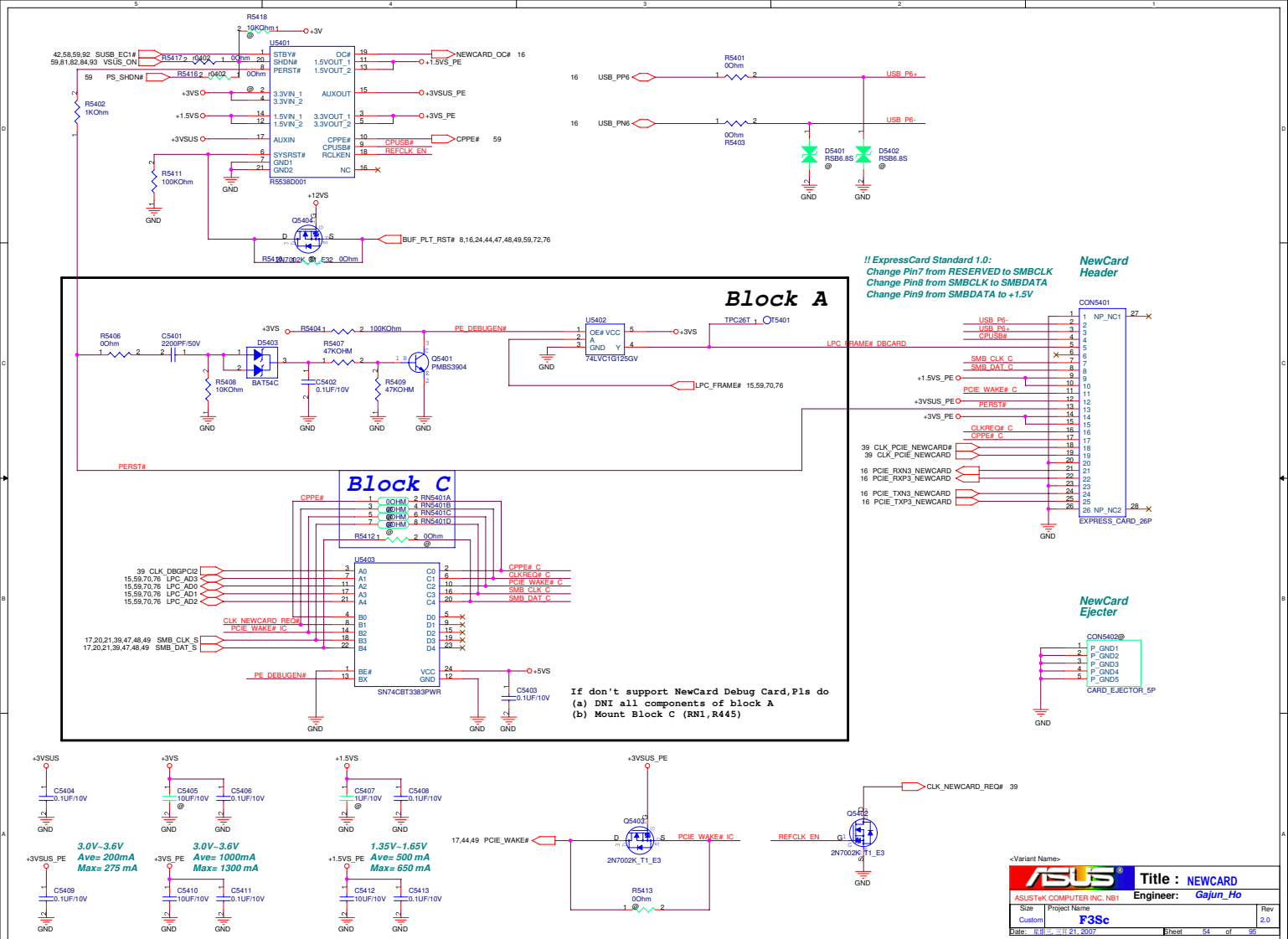

<Variant Name>

ASUSTeK COMPUTER INC. NB1	Title : NEWCARD	
	Engineer: Gajun_Ho	
Size: Custom	Project Name: F3Sc	Rev: 2.0
Date: 星期三, 二月 21, 2007	Sheet 54 of 95	

<Variant Name>

ASUSTeK COMPUTER INC	Title : None	
	Engineer: Gajun_Ho	
Size: Custom	Project Name: F3Sc	Rev: 2.0
Date: 星期三, 二月 21, 2007	Sheet 55 of 95	

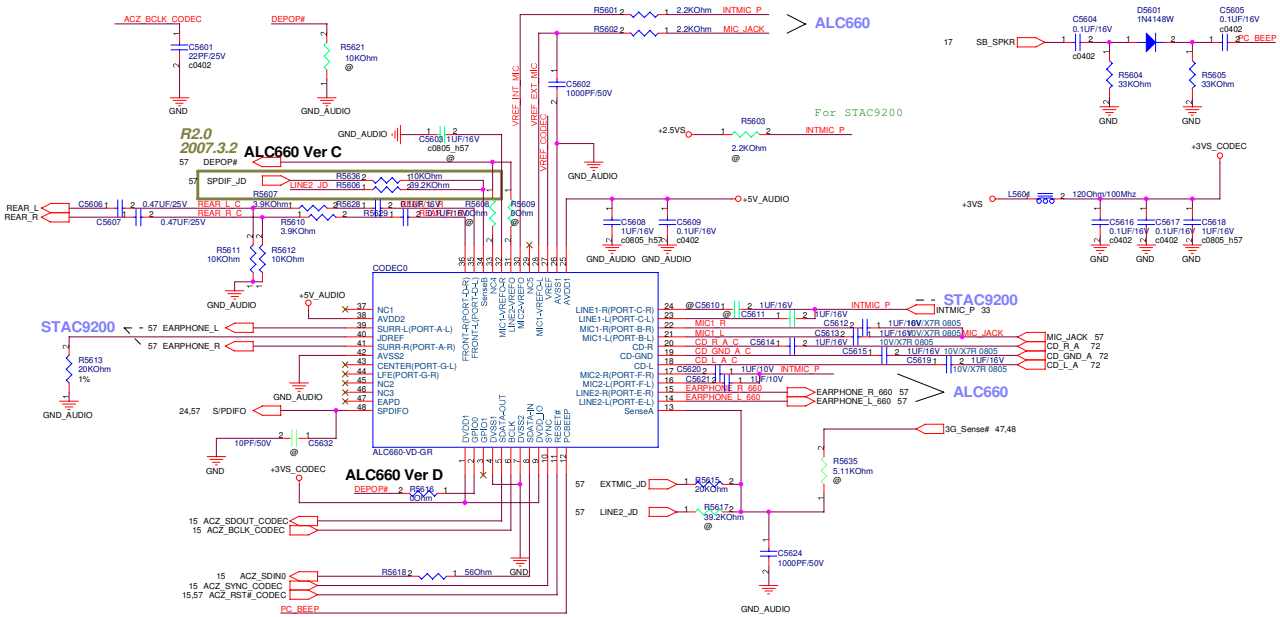
ALC660
R2.0
2007.3.2
ALC660 Ver C
STAC9200
ALC660 Ver D
CODEC0
ALC660-VD-GR
For STAC9200
Vout=1.25*(1+(100K/34K))
U5602
MAX8863TEUK
ASUSTeK COMPUTER INC. NB1
Title : CODEC-ALC660
Engineer: Gajun_Ho
Project Name
F3Sc
Sheet 56 of 95

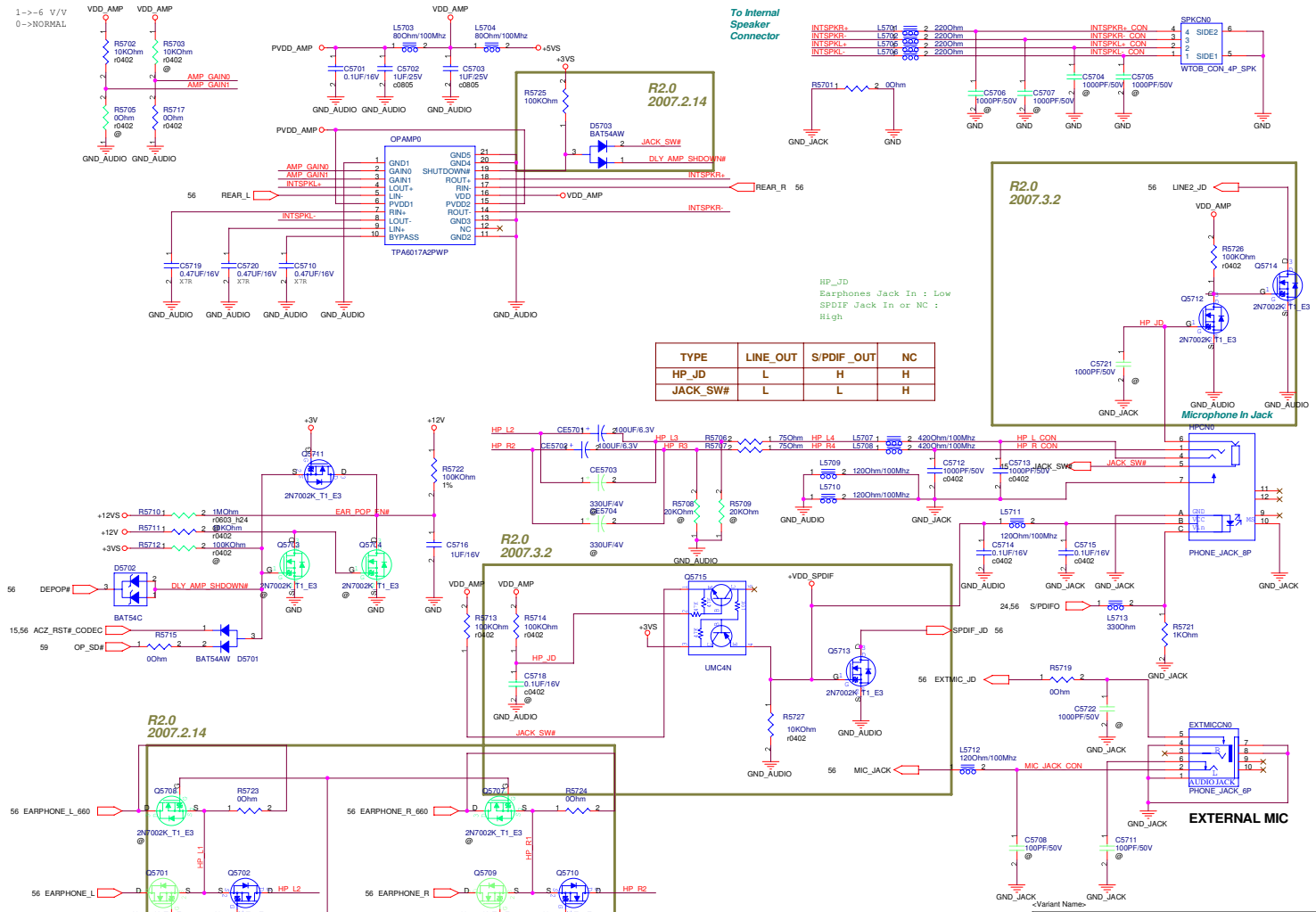

TYPE	LINE_OUT	S/PDIF_OUT	NC
HP_JD	L	H	H
JACK_SW#	L	L	H

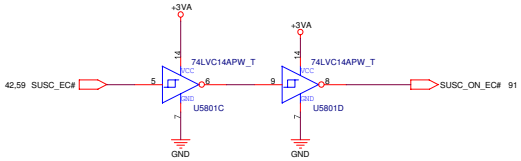

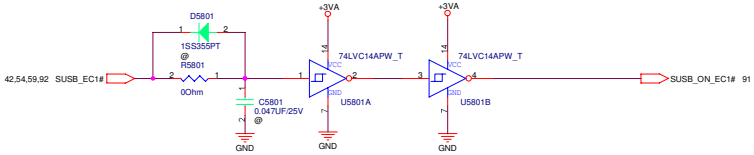

<Variant Name>

ASUSTeK COMPUTER INC	Title : Sequence Control Logic	
	Engineer: Gajun_Ho	
Size: Custom	Project Name: F3Sc	Rev: 2.0
Date: 星期三, 二月 21, 2007	Sheet 58 of 94	

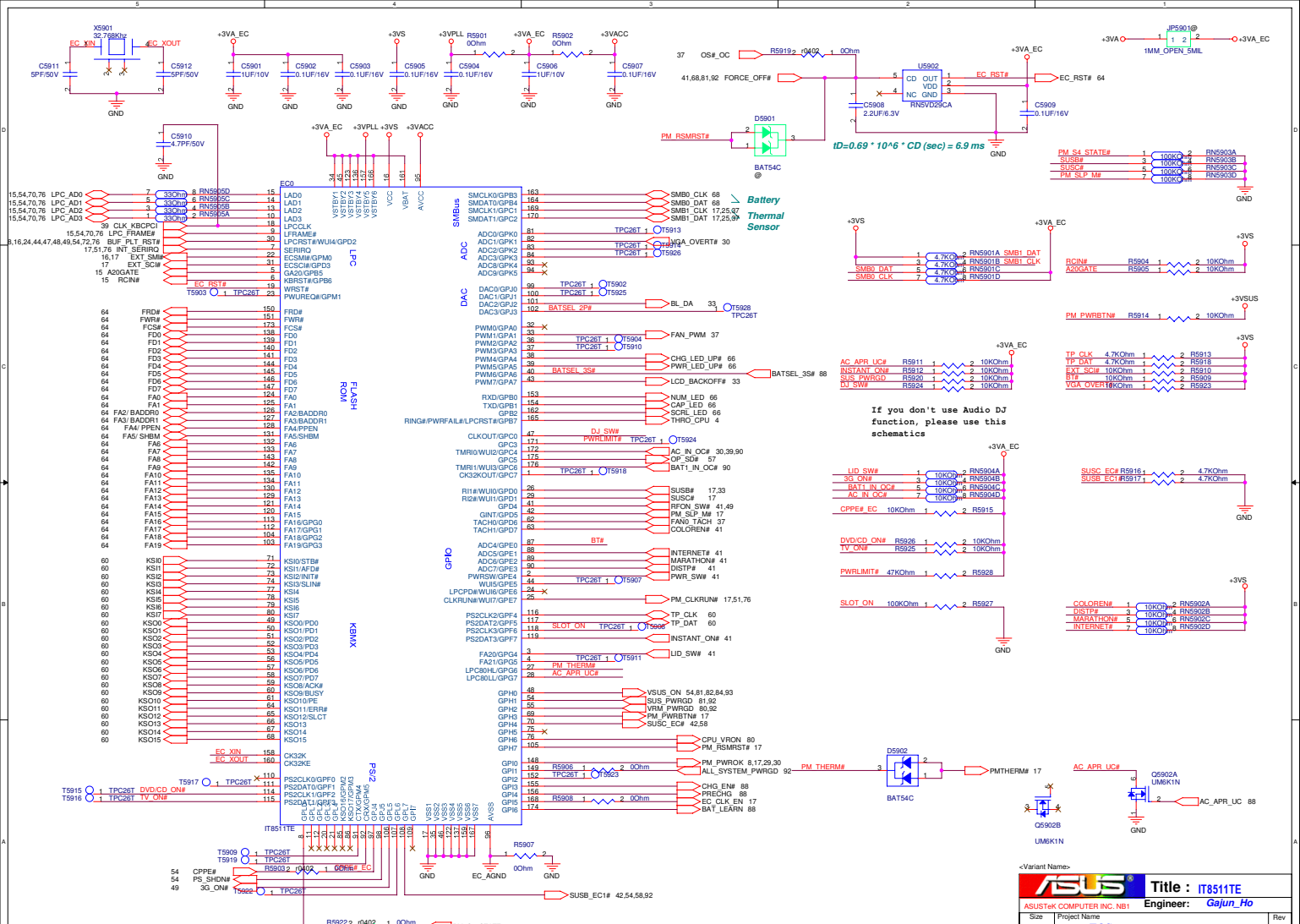
X5901
32.768Khz
EC_XIN
EC_XOUT
C5911
5PF/50V
C5912
5PF/50V
GND
+3VA_EC
C5901
1UF/10V
C5902
0.1UF/16V
C5903
0.1UF/16V
+3VS
C5905
0.1UF/16V
+3VPLL
R5901
0Ohm
C5904
0.1UF/16V
+3VA_EC
R5902
0Ohm
C5906
1UF/10V
+3VACC
C5907
0.1UF/16V
37 OS#_OC
R5919 r0402 1 0Ohm
41,68,81,92 FORCE_OFF#
U5902
CD OUT
VDD
NC GND
RN5VD29CA
EC_RST#
EC_RST# 64
C5908
2.2UF/6.3V
C5909
0.1UF/16V
JP5901@
1MM_OPEN_5MIL
+3VA
+3VA_EC
D5901
PM_RSMRST#
BAT54C
@
tD=0.69 * 10^6 * CD (sec) = 6.9 ms
C5910
4.7PF/50V
EC0
LPC
FLASH ROM
KBMX
PS/2
SMBus
ADC
DAC
GPIO
IT8511TE
Battery
Thermal
Sensor
LPC_AD0
LPC_AD1
LPC_AD2
LPC_AD3
CLK_KBCPCI
LPC_FRAME#
BUF_PLT_RST#
INT_SERIRQ
EXT_SMI#
EXT_SCI#
A20GATE
RCIN#
EC_RST#
T5903 1 TPC26T
FRD#
FWR#
FCS#
FA20/GATE
FA19/GPG3
KSI0
KSI1
KSI2
KSI3
KSI4
KSI5
KSI6
KSI7
KSO0
KSO1
KSO2
KSO3
KSO4
KSO5
KSO6
KSO7
KSO8
KSO9
KSO10
KSO11
KSO12
KSO13
KSO14
KSO15
EC_XIN
EC_XOUT
CK32K
CK32KE
PS2CLK0/GPF0
PS2DAT0/GPF1
PS2CLK1/GPF2
PS2DAT1/GPF3
T5915 1 TPC26T DVD/CD_ON#
T5916 1 TPC26T TV_ON#
T5917 1 TPC26T
T5909 1 TPC26T
T5919 1 TPC26T
R5903 2 r0402 1 0Ohm EC
54 CPPE#
54 PS_SHDN#
49 3G_ON#
T5922 1 TPC26T
R5922 2 r0402 1 0Ohm
PM_S4_STATE# 17
@
SMB0_CLK 68
SMB0_DAT 68
SMB1_CLK 17,25,97
SMB1_DAT 17,25,97
TPC26T 1 T5913
VGA_OVERT# 30
TPC26T 1 T5914
TPC26T 1 T5926
TPC26T 1 T5902
TPC26T 1 T5925
BATSEL_2P#
BL_DA 33
T5928
TPC26T
FAN_PWM 37
TPC26T 1 T5904
TPC26T 1 T5910
CHG_LED_UP# 66
PWR_LED_UP# 66
BATSEL_3S#
BATSEL_3S# 88
LCD_BACKOFF# 33
NUM_LED 66
CAP_LED 66
SCRL_LED 66
THRO_CPU 4
DJ_SW#
PWRLIMIT#
TPC26T 1 T5924
AC_IN_OC# 30,39,90
OP_SDI# 57
BAT1_IN_OC# 90
TPC26T 1 T5918
SUSB# 17,33
SUSC# 17
RFON_SW# 41,49
PM_SLP_M# 17
FAN0_TACH 37
COLOREN# 41
BT#
INTERNET# 41
MARATHON# 41
DIST# 41
PWR_SW# 41
TPC26T 1 T5907
PM_THERM#
AC_APR_UC#
PM_CLKRUN# 17,51,76
TP_CLK 60
TP_DAT 60
SLOT_ON
TPC26T 1 T5906
INSTANT_ON# 41
TPC26T 1 T5911
LID_SW# 41
VSUS_ON 54,81,82,84,93
SUS_PWRGD 81,92
VRM_PWRGD 80,92
PM_PWRBTN# 17
SUSC_EC# 42,58
CPU_VRON 80
PM_RSMRST# 17
PM_PWROK 8,17,29,30
ALL_SYSTEM_PWRGD 92
R5906 1 2 0Ohm
TPC26T 1 T5923
CHG_EN# 88
PRECHG# 88
EC_CLK_EN 17
BAT_LEARN 88
R5908 1 2 0Ohm
SUSB_EC1# 42,54,58,92
R5907
1 2
0Ohm
GND
EC_AGND
GND
PM_S4_STATE#
SUSS#
SUSC#
PM_SLP_M#
100KOhm
RN5903A
RN5903B
RN5903C
RN5903D
SMB1_DAT
SMB1_CLK
SMB0_DAT
SMB0_CLK
4.7KOhm
RN5901A
RN5901B
RN5901C
RN5901D
RCIN#
A20GATE
R5904 1 2 10KOhm
R5905 1 2 10KOhm
+3VSUS
PM_PWRBTN# R5914 1 2 10KOhm
AC_APR_UC#
INSTANT_ON#
SUS_PWRGD
DJ_SW#
R5911
R5912
R5920
R5924
10KOhm
TP_CLK
TP_DAT
EXT_SCI#
BT#
VGA_OVERT#
4.7KOhm
10KOhm
R5913
R5918
R5910
R5909
R5923
If you don't use Audio DJ function, please use this schematics
LID_SW#
3G_ON#
BAT1_IN_OC#
AC_IN_OC#
RN5904A
RN5904B
RN5904C
RN5904D
CPPE# EC 10KOhm 1 2 R5915
DVD/CD_ON#
TV_ON#
R5926
R5925
PWRLIMIT# 47KOhm 1 2 R5928
SLOT_ON 100KOhm 1 2 R5927
SUSC_EC# R5916
SUSB_EC1# R5917
4.7KOhm
COLOREN#
DIST#
MARATHON#
INTERNET#
RN5902A
RN5902B
RN5902C
RN5902D
PM_THERM# 3
D5902
BAT54C
PMTHERM# 17
AC_APR_UC#
Q5902A
UM6K1N
AC_APR_UC 88
Q5902B
UM6K1N
<Variant Name>
ASUSTeK COMPUTER INC. NB1
Title : IT8511TE
Engineer: Gajun_Ho
Size Custom
Project Name F3Sc
Rev 2.0
Date: 星期三, 三月 21, 2007
Sheet 59 of 95

For Touch-Pad

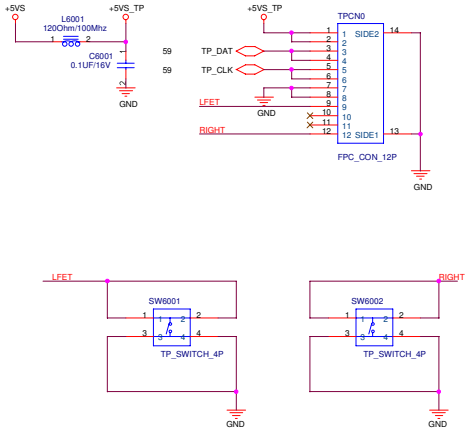

For Keyboard(24Pin) Non KID

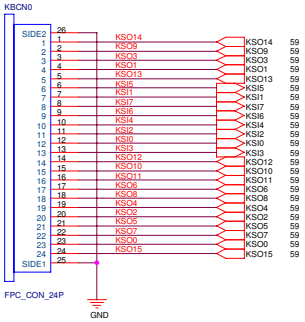

<Variant Name>

ASUSTeK COMPUTER INC. NB1	Title : Touch Pad & KB	
	Engineer: Gajun_Ho	
Size: Custom	Project Name: F3Sc	Rev: 2.0
Date: 星期三, 二月 21, 2007	Sheet 60 of 95	

<Variant Name>

ASUSTeK COMPUTER INC	Title : Schematic page name	
	Engineer: Gajun_Ho	
Size: Custom	Project Name: F3Sc	Rev: 2.0
Date: 星期二, 二月 21, 2007	Sheet 61 of 95	

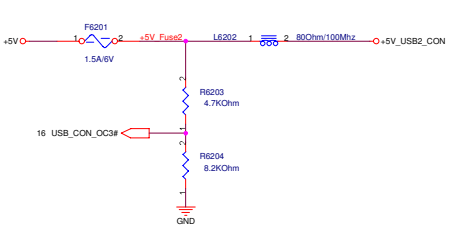

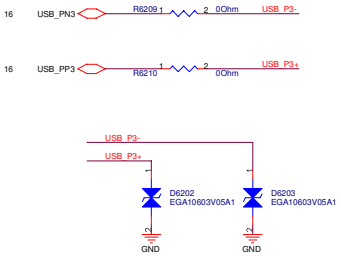

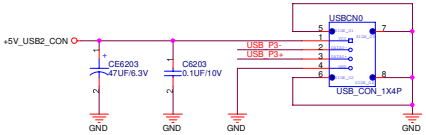

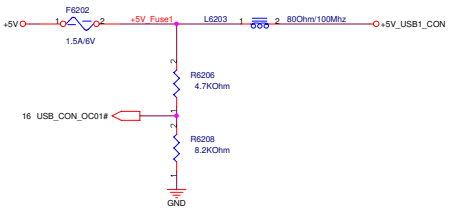

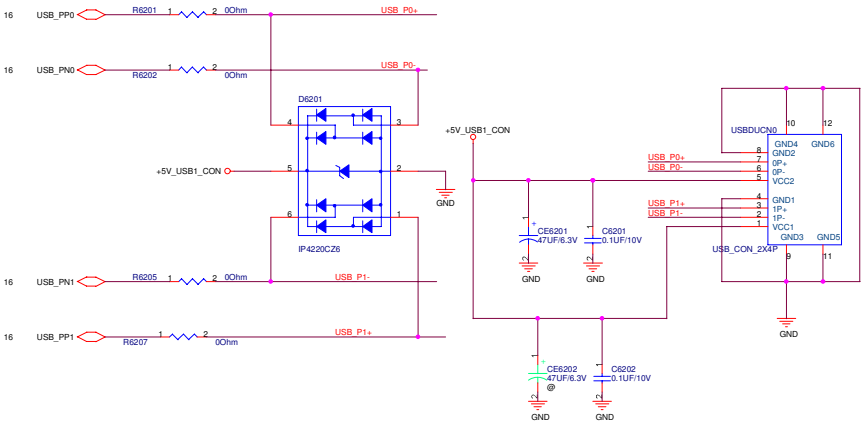

<Variant Name>

ASUSTeK COMPUTER INC	Title : USB CONN	
	Engineer: Gajun_Ho	
Size: Custom	Project Name: F3Sc	Rev: 2.0
Date: 星期三, 二月 21, 2007	Sheet 62 of 95	

<Variant Name>

ASUSTeK COMPUTER INC	Title : Schematic page name	
	Engineer: Gajun_Ho	
Size: Custom	Project Name: F3Sc	Rev: 2.0
Date: 星期三, 三月 21, 2007	Sheet 63 of 95	

ISA ROM

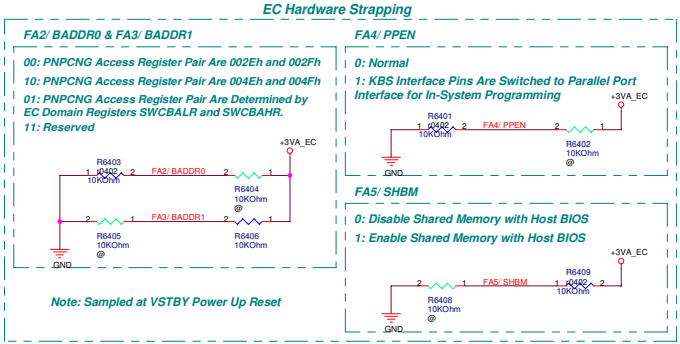

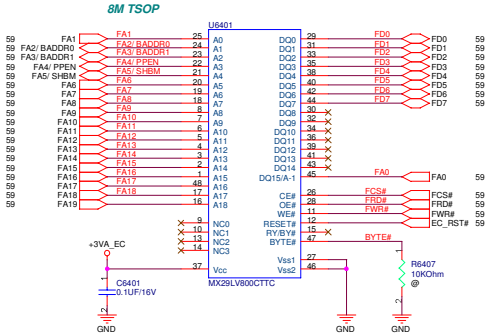

<Variant Name>

ASUSTeK COMPUTER INC. NB1	Title : ISA ROM	
	Engineer: Gajun_Ho	
Size: Custom	Project Name: F3Sc	Rev: 2.0
Date: 星期三, 三月 21, 2007	Sheet 64 of 95	

<Variant Name>

	Title : SPI ROM	
ASUSTeK COMPUTER INC. NB1	Engineer: Gajun_Ho	
Size: Custom	Project Name: F3Sc	Rev: 2.0
Date: 星期三, 二月 21, 2007	Sheet 65 of 95	

For LED

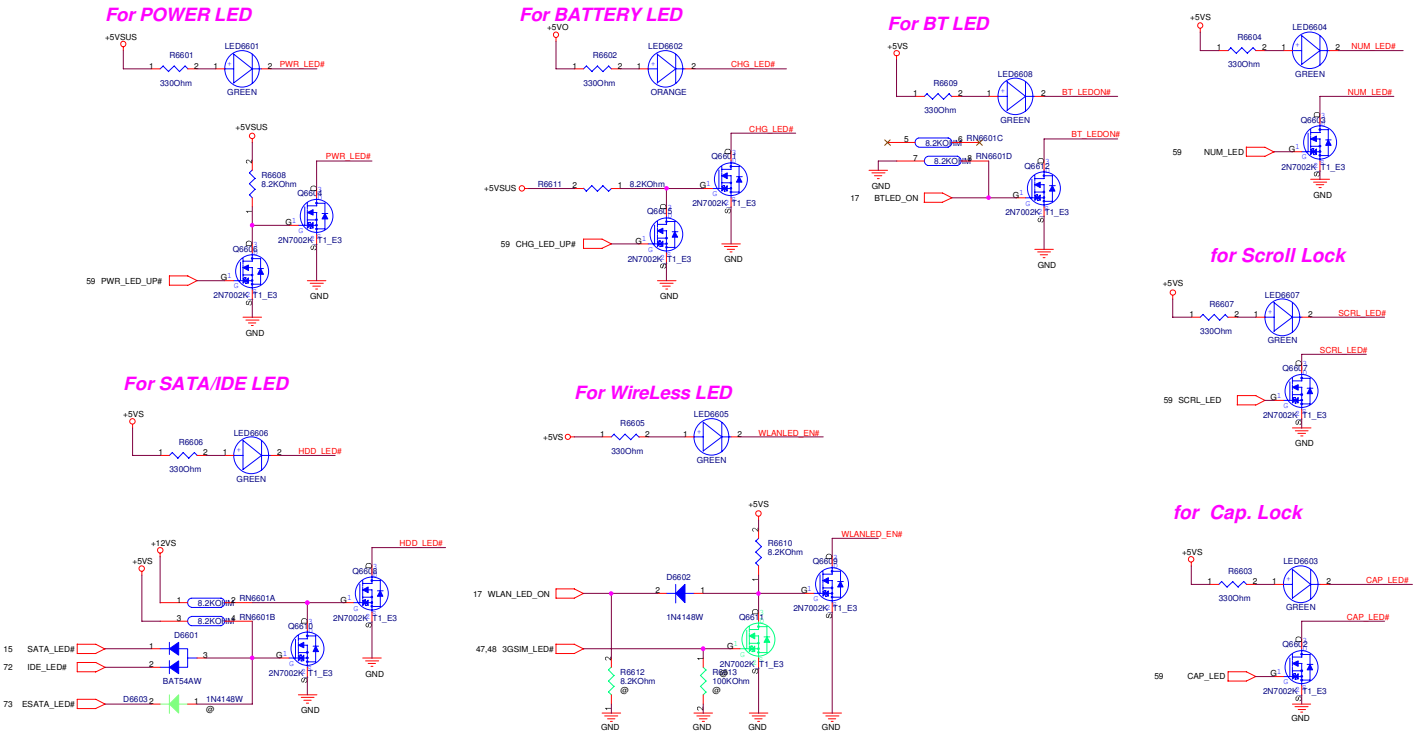

<Variant Name>

ASUSTeK COMPUTER INC	Title : LED	Engineer: Gajun_Ho
Size: Custom	Project Name: F3Sc	Rev: 2.0
Date: 星期三, 二月 21, 2007	Sheet 66 of 95	

<Variant Name>

ASUSTeK COMPUTER INC	Title : Schematic page name		
	Engineer: Gajun_Ho		
Size: Custom	Project Name: F3Sc		Rev: 2.0
Date: 星期三, 三月 21, 2007	Sheet 67 of 95		

DC IN

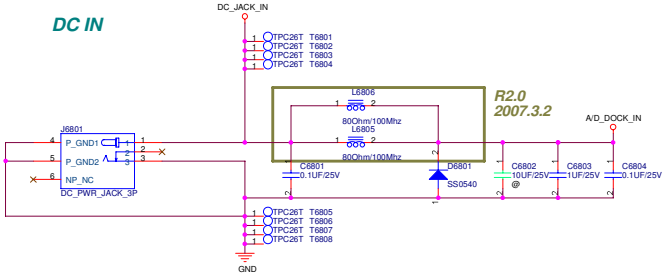

BAT IN

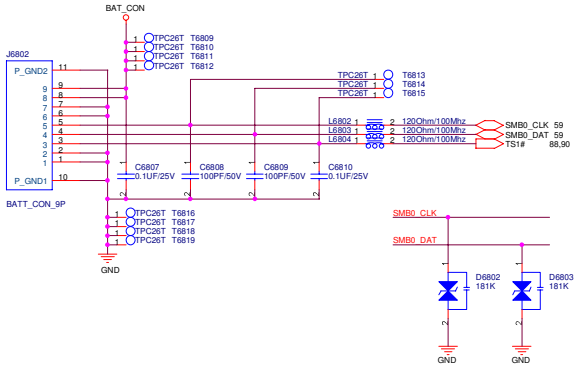

Without Battery & Pull out Adapter

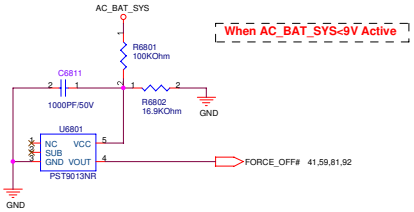

<Variant Name>

ASUSTeK COMPUTER INC. NB1	Title : DC & BAT IN	
	Engineer: Gajun_Ho	
Size: Custom	Project Name: F3Sc	Rev: 2.0
Date: 星期三, 二月 21, 2007	Sheet 68 of 95	

<Variant Name>

ASUSTeK COMPUTER INC	Title : Schematic page name	
	Engineer: Gajun_Ho	
Size: Custom	Project Name: F3Sc	Rev: 2.0
Date: 星期三, 三月 21, 2007	Sheet 69 of 95	

For Debug

If support NewCard Debug Card,
Pls don't mount all components.

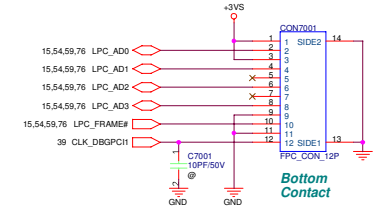

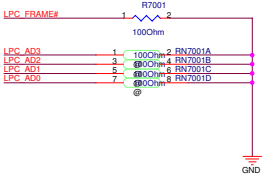

<Variant Name>

ASUSTeK COMPUTER INC	Title : Debug CONN.	
	Engineer: Gajun_Ho	
Size: Custom	Project Name: F3Sc	Rev: 2.0
Date: 星期三, 三月 21, 2007	Sheet 70 of 95	

<Variant Name>

ASUSTeK COMPUTER INC	Title : Schematic page name		
	Engineer: Gajun_Ho		
Size: Custom	Project Name: F3Sc		Rev: 2.0
Date: 星期三, 三月 21, 2007	Sheet 71 of 95		

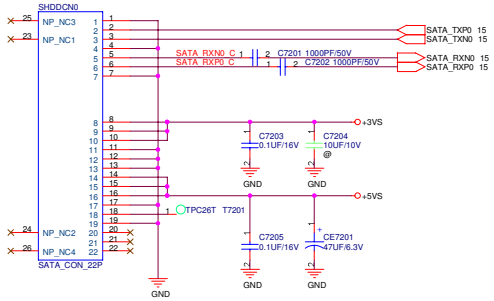
SHDDCN0
NP_NC3
NP_NC1
NP_NC2
NP_NC4
SATA_CON_22P
SATA_TXP0 15
SATA_TXN0 15
SATA_RXN0 15
SATA_RXP0 15
SATA_RXN0_C
SATA_RXP0_C
C7201 1000PF/50V
C7202 1000PF/50V
+3VS
C7203 0.1UF/16V
C7204 10UF/10V
@
GND
+5VS
TPC26T T7201
C7205 0.1UF/16V
CE7201 47UF/6.3V

SATA HDD

ODD

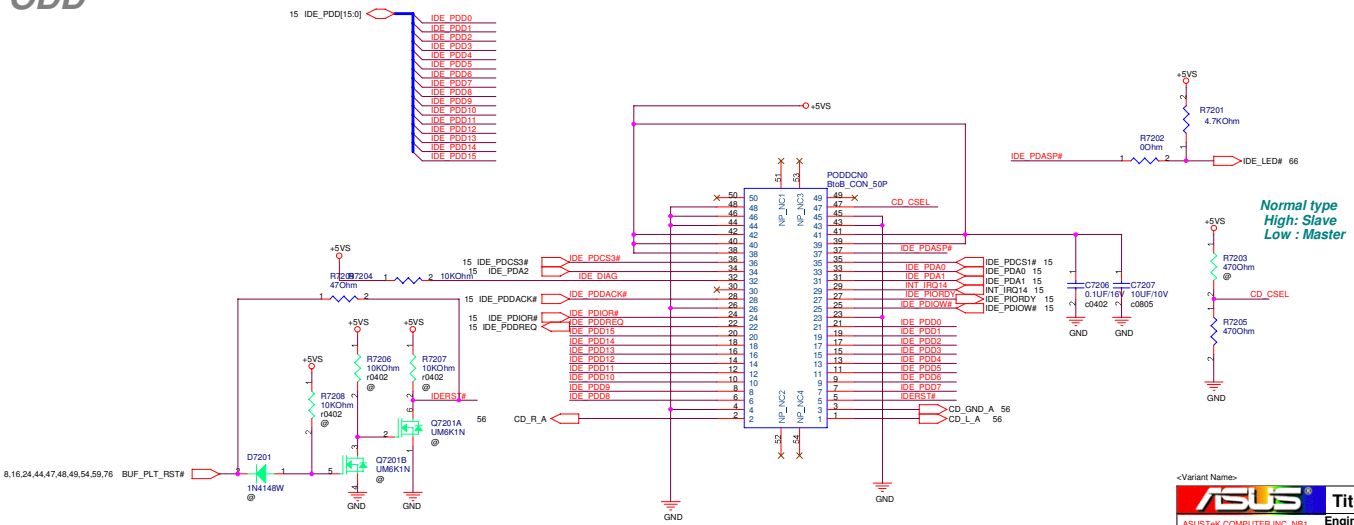
15 IDE_PDD[15:0]
IDE_PDD0
IDE_PDD1
IDE_PDD2
IDE_PDD3
IDE_PDD4
IDE_PDD5
IDE_PDD6
IDE_PDD7
IDE_PDD8
IDE_PDD9
IDE_PDD10
IDE_PDD11
IDE_PDD12
IDE_PDD13
IDE_PDD14
IDE_PDD15
+5VS
PODDCN0
BloB_CON_50P
NP_NC1
NP_NC3
NP_NC2
NP_NC4
CD_CSEL
IDE_PDASP#
IDE_PDCS3#
IDE_DIAG
IDE_PDDACK#
IDE_PDIOR#
IDE_PDDREQ
IDE_PDD15
IDE_PDD14
IDE_PDD13
IDE_PDD12
IDE_PDD11
IDE_PDD10
IDE_PDD9
IDE_PDD8
IDERST#
CD_R_A
CD_GND_A 56
CD_L_A 56
IDE_PDCS1# 15
IDE_PDA0 15
IDE_PDA1 15
INT_IRQ14 15
IDE_PIORDY 15
IDE_PDIOW# 15
IDE_PDD0
IDE_PDD1
IDE_PDD2
IDE_PDD3
IDE_PDD4
IDE_PDD5
IDE_PDD6
IDE_PDD7
R7201 4.7KOhm
R7202 0Ohm
IDE_LED# 66
C7206 0.1UF/16V c0402
C7207 10UF/10V c0805
R7203 470Ohm
@
R7205 470Ohm
Normal type
High: Slave
Low : Master
R7204 10KOhm
R7209 47Ohm
15 IDE_PDCS3#
15 IDE_PDA2
15 IDE_PDDACK#
15 IDE_PDIOR#
15 IDE_PDDREQ
R7206 10KOhm r0402 @
R7207 10KOhm r0402 @
R7208 10KOhm r0402 @
Q7201A UM6K1N @
Q7201B UM6K1N @
D7201 1N4148W @
8,16,24,44,47,48,49,54,59,76 BUF_PLT_RST#
GND

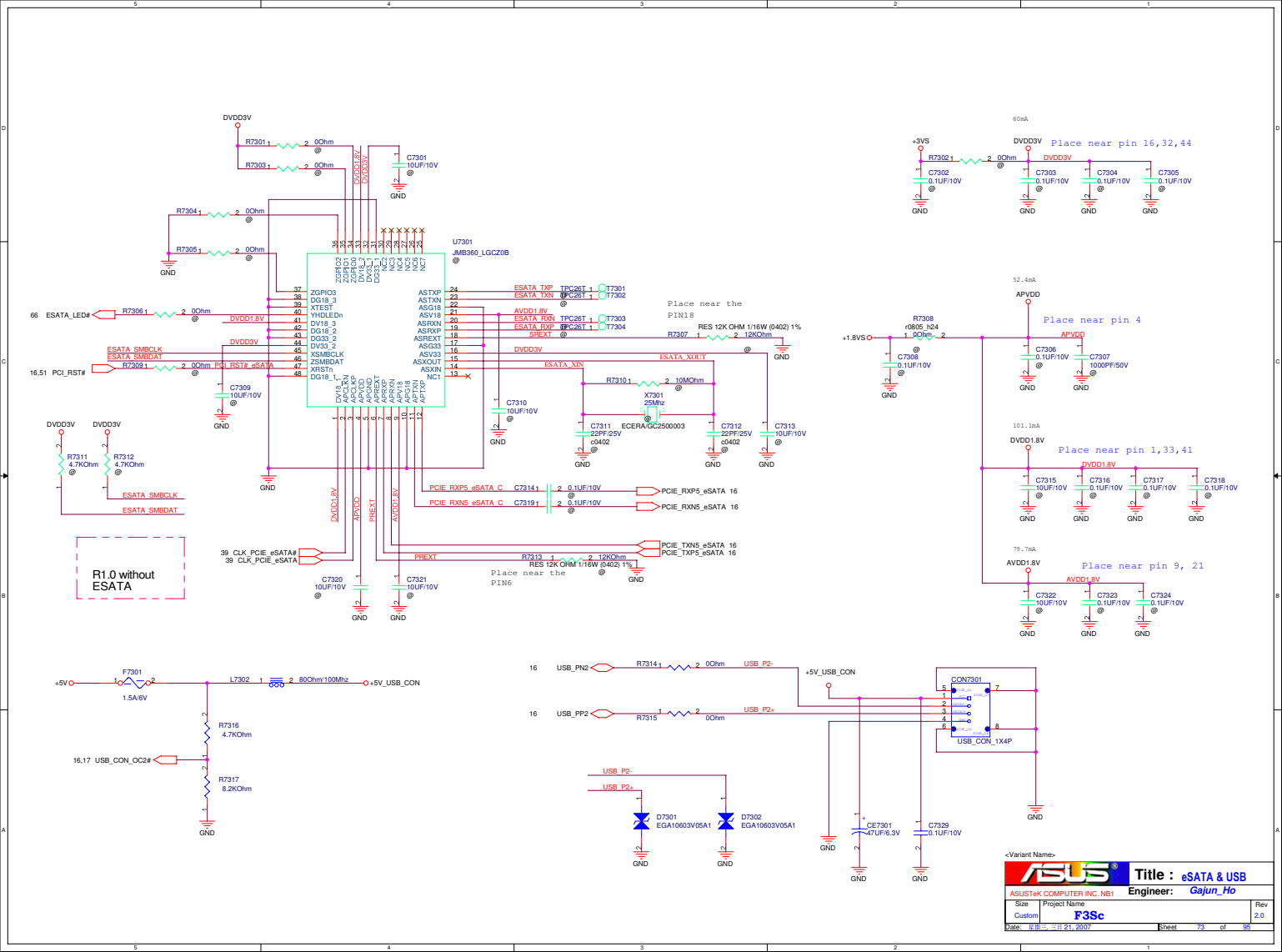
DVDD3V
R7301 0Ohm
R7303 0Ohm
C7301 10UF/10V
GND
R7304 0Ohm
R7305 0Ohm
U7301
JMB360_LGCZ0B
ZGPIO2
ZGPIO1
ZGPIO0
DVDD1.8V
DVDD3V
DV3_1
DV3_2
NC3
NC4
NC5
NC6
NC7
ZGPIO3
DG18_3
XTEST
YHDLEDn
DV18_3
DG18_2
DG33_2
DV33_2
XSMBCLK
ZSMBDAT
XRSTn
DG18_1
DV18_1
APCLKP
APCLKN
APGND
APVDD
APGND
APREXT
APRXP
APRXN
APV18
APTXN
APTXP
ASTXP
ASTXN
ASG18
ASV18
ASRXN
ASRXP
ASREXT
ASG33
ASV33
ASXOUT
ASXIN
NC1
66 ESATA_LED#
R7306 0Ohm
DVDD1.8V
DVDD3V
ESATA_SMBCLK
ESATA_SMBDAT
16,51 PCI_RST#
R7309 0Ohm PCI_RST# eSATA
C7309 10UF/10V
ESATA_TXP TPC26T T7301
ESATA_TXN TPC26T T7302
AVDD1.8V
ESATA_RXN TPC26T T7303
ESATA_RXP TPC26T T7304
SREXT
DVDD3V
ESATA_XOUT
ESATA_XIN
Place near the PIN18
R7307 RES 12K OHM 1/16W (0402) 1%
12KOhm
R7310 10MOhm
X7301 25Mhz
C7310 10UF/10V
C7311 22PF/25V c0402
ECERA/GC2500003
C7312 22PF/25V c0402
C7313 10UF/10V
DVDD3V DVDD3V
R7311 4.7KOhm
R7312 4.7KOhm
ESATA_SMBCLK
ESATA_SMBDAT
PCIE_RXP5_eSATA_C C7314 0.1UF/10V
PCIE_RXN5_eSATA_C C7319 0.1UF/10V
PCIE_RXP5_eSATA 16
PCIE_RXN5_eSATA 16
PCIE_TXN5_eSATA 16
PCIE_TXP5_eSATA 16
39 CLK_PCIE_eSATA#
39 CLK_PCIE_eSATA
PREXT
R7313 RES 12K OHM 1/16W (0402) 1% 12KOhm
Place near the PIN6
C7320 10UF/10V
C7321 10UF/10V
R1.0 without ESATA
60mA
+3VS
R7302 0Ohm
DVDD3V
Place near pin 16,32,44
C7302 0.1UF/10V
C7303 0.1UF/10V
C7304 0.1UF/10V
C7305 0.1UF/10V
52.4mA
APVDD
Place near pin 4
+1.8VS
R7308 r0805_h24 90Ohm
C7308 0.1UF/10V
C7306 0.1UF/10V
C7307 1000PF/50V
101.1mA
DVDD1.8V
Place near pin 1,33,41
C7315 10UF/10V
C7316 0.1UF/10V
C7317 0.1UF/10V
C7318 0.1UF/10V
79.7mA
AVDD1.8V
Place near pin 9, 21
C7322 10UF/10V
C7323 0.1UF/10V
C7324 0.1UF/10V
+5V
F7301 1.5A/6V
L7302 80Ohm/100Mhz
+5V_USB_CON
R7316 4.7KOhm
16,17 USB_CON_OC2#
R7317 8.2KOhm
16 USB_PN2
R7314 0Ohm
USB_P2-
16 USB_PP2
R7315 0Ohm
USB_P2+
+5V_USB_CON
CON7301
USB_CON_1X4P
USB_P2-
USB_P2+
D7301 EGA10603V05A1
D7302 EGA10603V05A1
CE7301 47UF/6.3V
C7329 0.1UF/10V
<Variant Name>
Title : eSATA & USB
ASUSTeK COMPUTER INC. NB1
Engineer: Gajun_Ho
Size Custom
Project Name F3Sc
Rev 2.0
Date: 星期三, 二月 21, 2007
Sheet 73 of 95

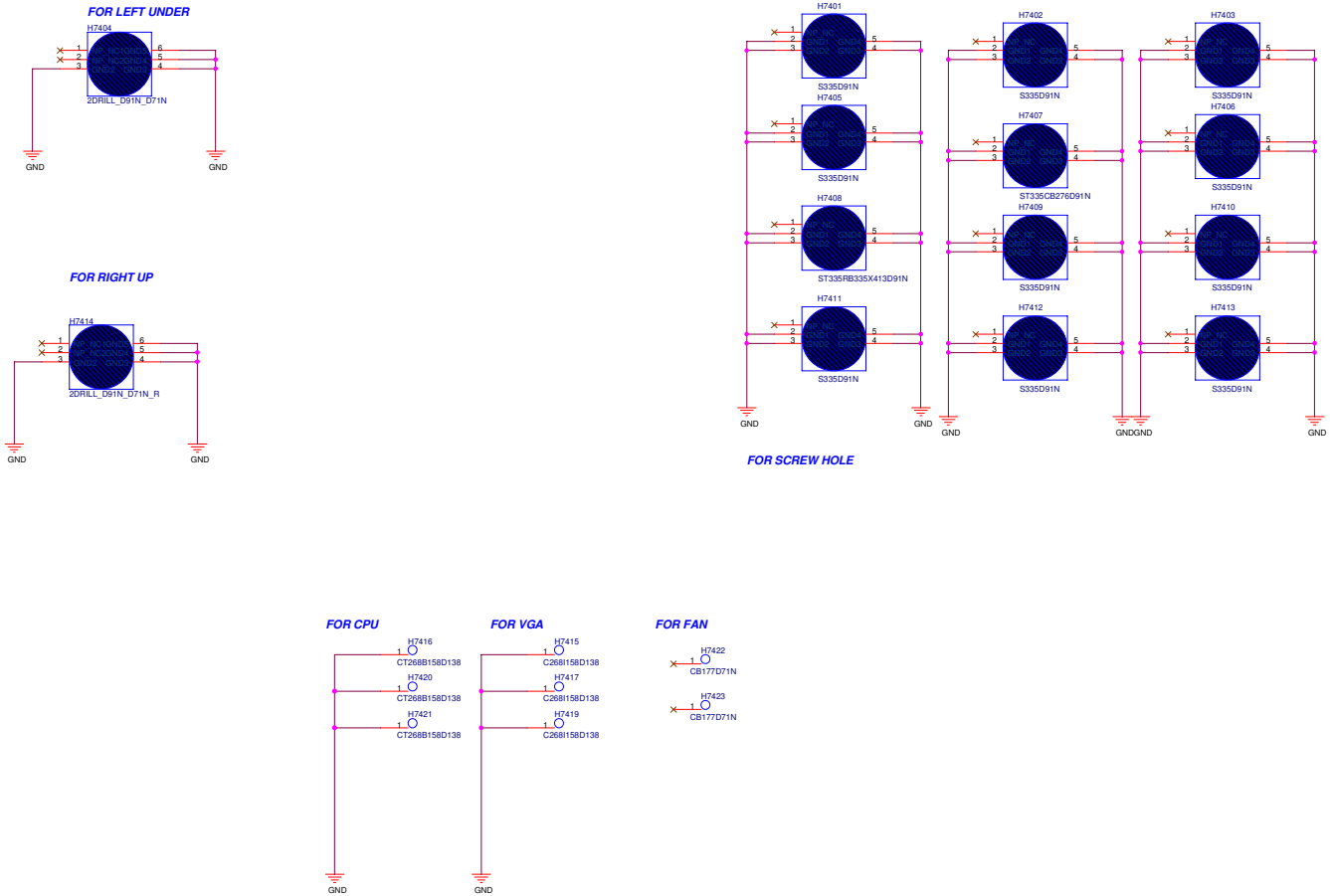

<Variant Name>

ASUS	Title : SREW HOLE	
ASUSTeK COMPUTER INC	Engineer: Gajun_Ho	
Size: Custom	Project Name: F3Sc	Rev: 2.0
Date: 星期三, 二月 21, 2007	Sheet 74 of 95	

<Variant Name>

ASUSTeK COMPUTER INC	Title : Schematic page name		
	Engineer: Gajun_Ho		
Size: Custom	Project Name: F3Sc		Rev: 2.0
Date: 星期三, 三月 21, 2007	Sheet 75 of 95		

For TPM Module

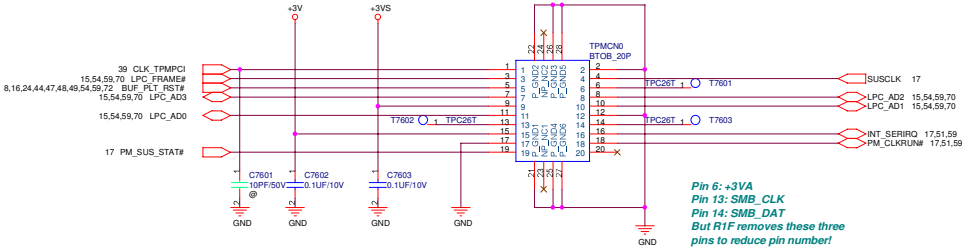

Pin 6: +3VA
Pin 13: SMB_CLK
Pin 14: SMB_DAT
But R1F removes these three pins to reduce pin number!

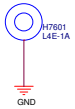

<Variant Name>

ASUSTeK COMPUTER INC	Title : TPM	
	Engineer: Gajun_Ho	
Size: Custom	Project Name: F3Sc	Rev: 2.0
Date: 星期三, 二月 21, 2007	Sheet 76 of 95	

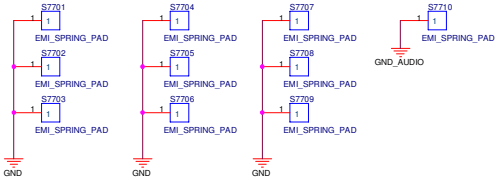

<Variant Name>

ASUSTeK COMPUTER INC	Title : SPRING_PAD	
	Engineer: Gajun_Ho	
Size: Custom	Project Name: F3Sc	Rev: 2.0
Date: 星期三, 二月 21, 2007	Sheet 77 of 95	

For Bluetooth

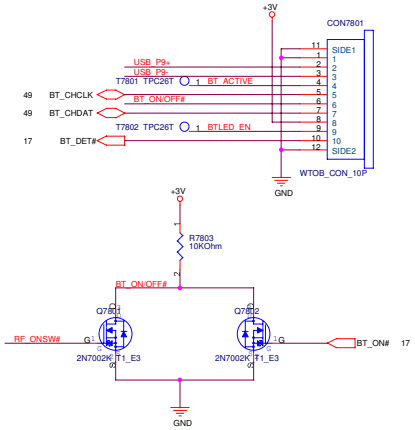

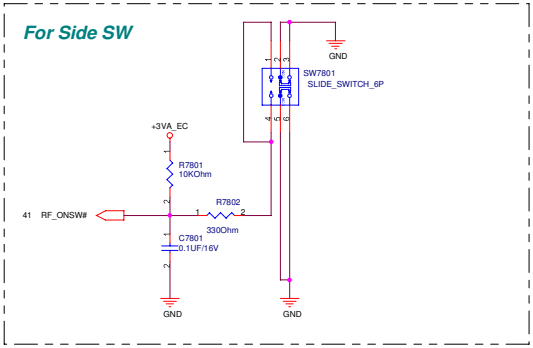

<Variant Name>

ASUSTeK COMPUTER INC	Title : Blue Tooth	
	Engineer: Gajun_Ho	
Size: Custom	Project Name: F3Sc	Rev: 2.0
Date: 星期三, 二月 21, 2007	Sheet 78 of 95	

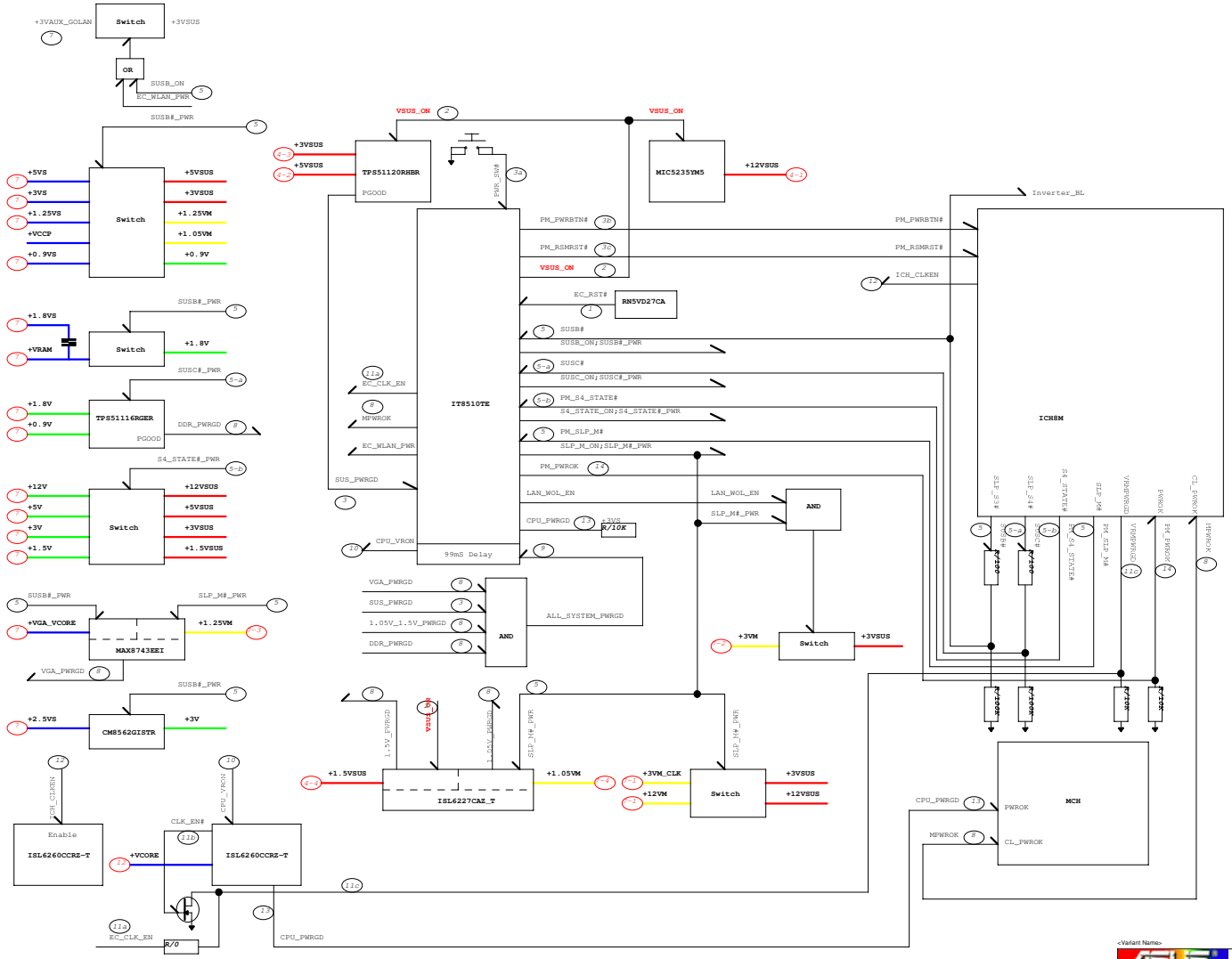

<Variant Name>

ASUS	Title : POWER SEQUENCE		
ASUSTeK COMPUTER INC	Engineer: Jack Chen		
Size: C	Project Name: F3Sa		Rev: 1.0
Date: 星期二, 十月 31, 2006		Sheet 79 of 86	

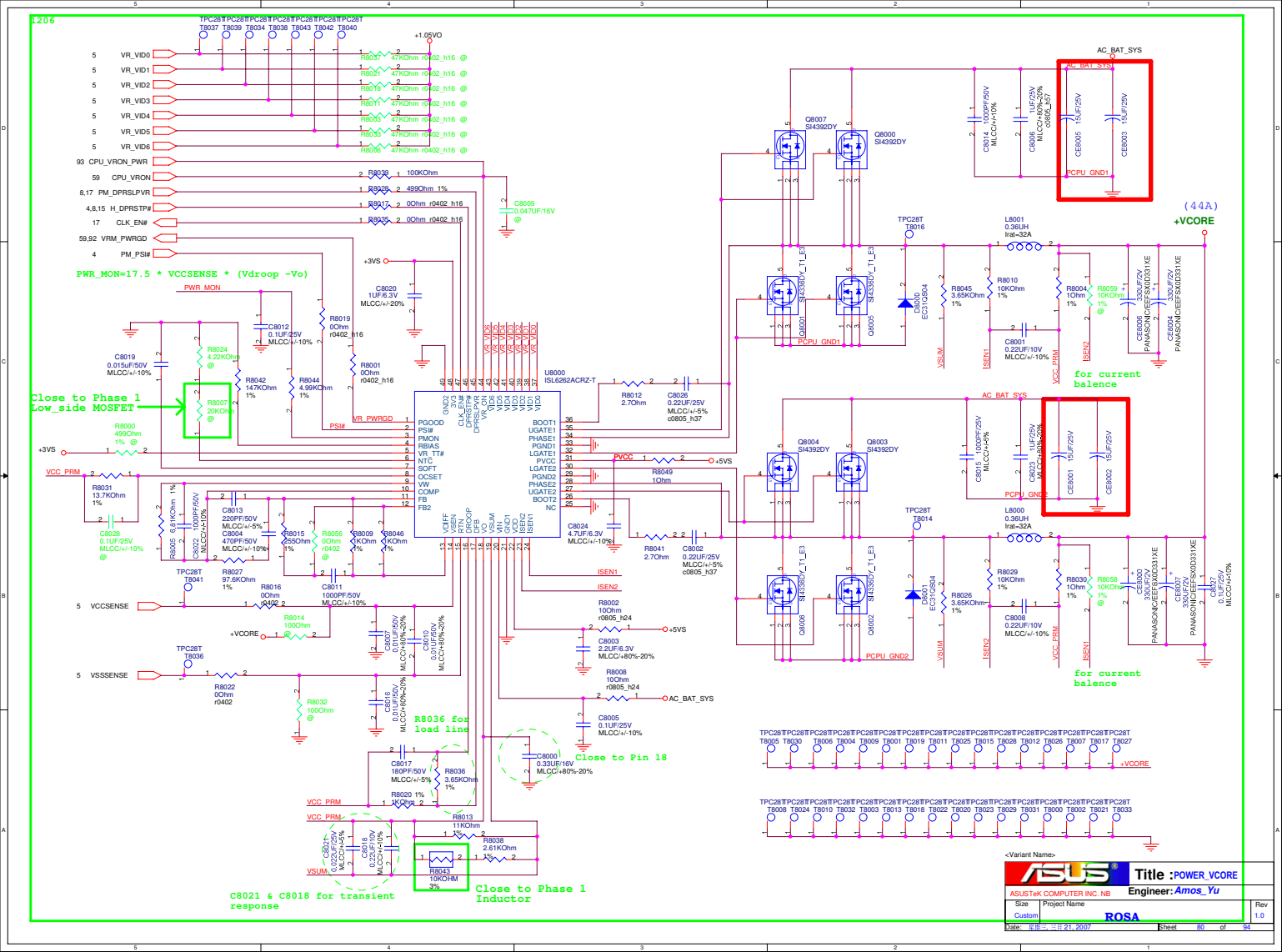
L206
PWR_MON=17.5 * VCCSENSE * (Vdroop -Vo)
Close to Phase 1 Low_side MOSFET
U8000 ISL6262ACRZ-T
+VCORE
(44A)
for current balence
R8036 for load line
Close to Pin 18
Close to Phase 1 Inductor
C8021 & C8018 for transient response
AC_BAT_SYS
PCPU_GND1
PCPU_GND2
VCC_PRM
VSUM
ISEN1
ISEN2
VCCSENSE
VSSSENSE
PSI#
VR_PWRGD
PVCC
+5VS
+3VS
+1.05VO
ROSA
Title : POWER_VCORE
ASUSTeK COMPUTER INC. NB
Engineer: Amos_Yu
Size Custom
Project Name
Rev 1.0
Date: 星期三, 三月 21, 2007
Sheet 80 of 94

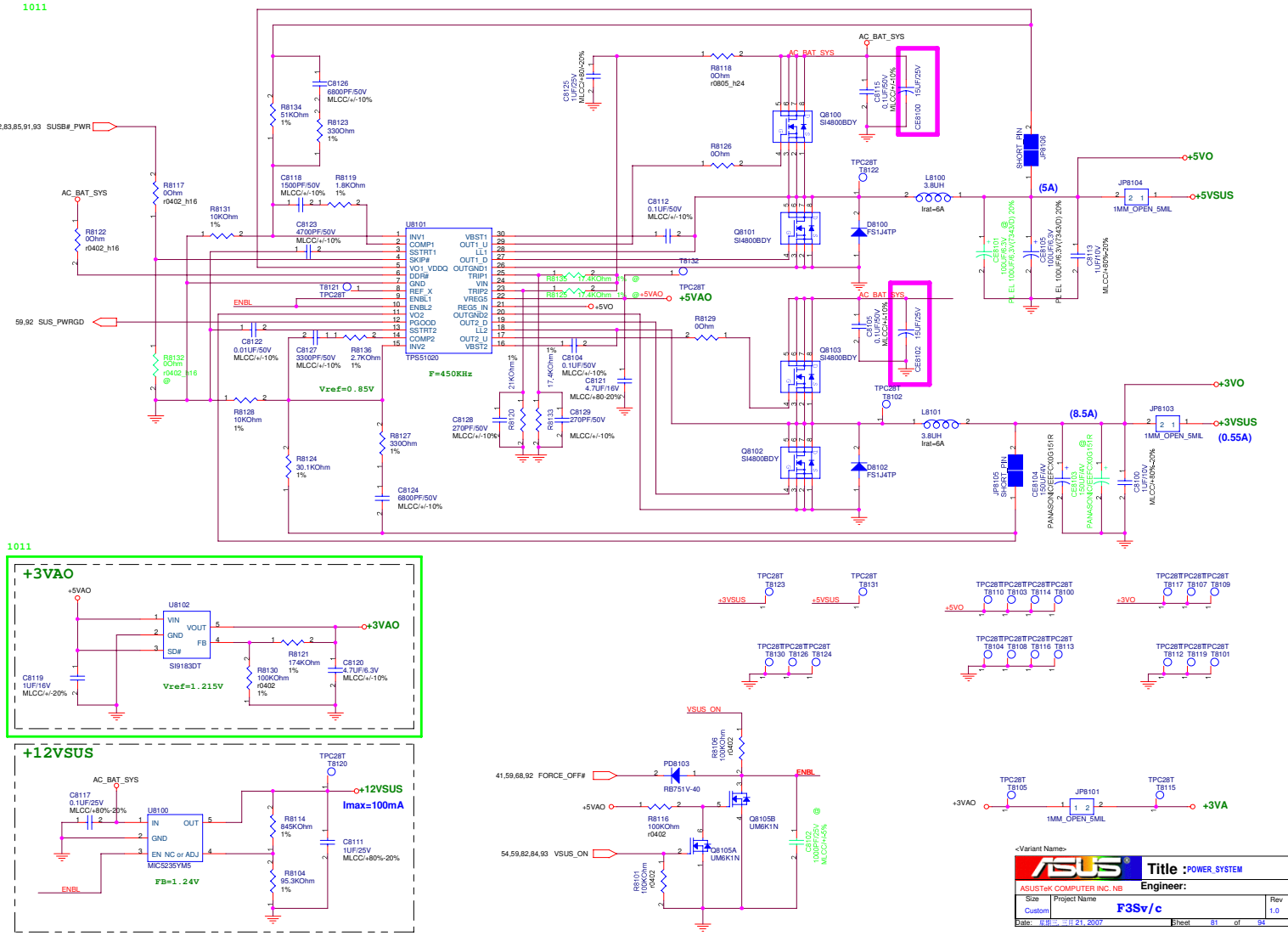
1011
82,83,85,91,93 SUSB#_PWR
AC_BAT_SYS
R8117 0Ohm r0402_h16
R8122 0Ohm r0402_h16
R8131 10KOhm 1%
R8134 51KOhm 1%
R8123 330Ohm 1%
C8126 6800PF/50V MLCC/+/-10%
C8118 1500PF/50V MLCC/+/-10%
R8119 1.8KOhm 1%
C8123 4700PF/50V MLCC/+/-10%
U8101
INV1
COMP1
SSTRT1
SKIP#
VO1_VDDQ
DDR#
GND
REF_X
ENBL1
ENBL2
VO2
PGOOD
SSTRT2
COMP2
INV2
VBST1
OUT1_U
LL1
OUT1_D
OUTGND1
TRIP1
VIN
TRIP2
VREG5
REG5_IN
OUTGND2
OUT2_D
LL2
OUT2_U
VBST2
TPS51020
F=450KHz
Vref=0.85V
ENBL
59,92 SUS_PWRGD
R8132 0Ohm r0402_h16 @
C8122 0.01UF/50V MLCC/+/-10%
C8127 3300PF/50V MLCC/+/-10%
R8136 2.7KOhm 1%
R8128 10KOhm 1%
R8124 30.1KOhm 1%
R8127 330Ohm 1%
C8124 6800PF/50V MLCC/+/-10%
C8125 1UF/25V MLCC/+80/-20%
R8118 0Ohm r0805_h24
R8126 0Ohm
Q8100 SI4800BDY
C8115 0.1UF/50V MLCC/+/-10%
C8100 1UF/25V
TPC28T T8122
L8100 3.8UH Irat=6A
SHORT_PIN JP8105
+5VO
(5A)
JP8104
+5VSUS
1MM_OPEN_5MIL
C8112 0.1UF/50V MLCC/+/-10%
Q8101 SI4800BDY
D8100 FS1J4TP
CE8101 100UF/6.3V PL EL 100UF/6.3V
CE8105 100UF/6.3V PL EL 100UF/6.3V
C8113 1UF/25V MLCC/+80%-20%
T8132
R8135 17.4KOhm 1% @
R8125 17.4KOhm 1% @
+5VAO
TPC28T T8121
+5VAO
+5VO
R8129 0Ohm
C8105 0.1UF/50V MLCC/+/-10%
Q8103 SI4800BDY
C8102 1UF/25V
TPC28T T8102
L8101 3.8UH Irat=6A
(8.5A)
JP8103
+3VO
+3VSUS
1MM_OPEN_5MIL
(0.55A)
C8104 4.7UF/16V MLCC/+/-80%-20%
C8121 4.7UF/16V MLCC/+80-20%
C8128 270PF/50V MLCC/+/-10%
C8129 270PF/50V MLCC/+/-10%
R8120 21KOhm 1%
R8133 17.4KOhm 1%
Q8102 SI4800BDY
D8102 FS1J4TP
JP8105 SHORT_PIN
CE8104 150UF/16V PANASONIC(EFCX0151R)
CE8103 150UF/16V PANASONIC(EFCX0151R)
C8100 1UF/25V MLCC/+80%-20%
+3VAO
+5VAO
U8102
VIN
VOUT
GND
FB
SDI#
SI9183DT
+3VAO
R8121 174KOhm 1%
R8130 100KOhm r0402 1%
C8120 4.7UF/6.3V MLCC/+/-10%
C8119 1UF/16V MLCC/+/-20%
Vref=1.215V
+12VSUS
TPC28T T8120
AC_BAT_SYS
C8117 0.1UF/25V MLCC/+80%-20%
U8100
IN
OUT
GND
EN NC or ADJ
MIC5235YM5
+12VSUS
Imax=100mA
R8114 845KOhm 1%
C8111 1UF/25V MLCC/+80%-20%
R8104 95.3KOhm 1%
FB=1.24V
ENBL
TPC28T T8123 +3VSUS
TPC28T T8131 +5VSUS
TPC28T T8130 TPC28T T8126 TPC28T T8124
TPC28T T8110 TPC28T T8103 TPC28T T8114 TPC28T T8100 +5VO
TPC28T T8104 TPC28T T8108 TPC28T T8116 TPC28T T8113
TPC28T T8117 TPC28T T8107 TPC28T T8109 +3VO
TPC28T T8112 TPC28T T8119 TPC28T T8101
VSUS_ON
R8106 100KOhm r0402
PD6103 RB751V-40
41,59,68,92 FORCE_OFF#
ENBL
+5VAO
R8116 100KOhm r0402
Q8105B UM6K1N
54,59,82,84,93 VSUS_ON
Q8105A UM6K1N
R8101 100KOhm r0402
C8102 100PF/25V MLCC/+/-5% @
TPC28T T8105 +3VAO
JP8101
1MM_OPEN_5MIL
TPC28T T8115 +3VA
<Variant Name>
Title : POWER_SYSTEM
ASUSTeK COMPUTER INC. NB
Engineer:
Size Custom
Project Name F3Sv/c
Rev 1.0
Date: 星期三, 三月 21, 2007
Sheet 81 of 94

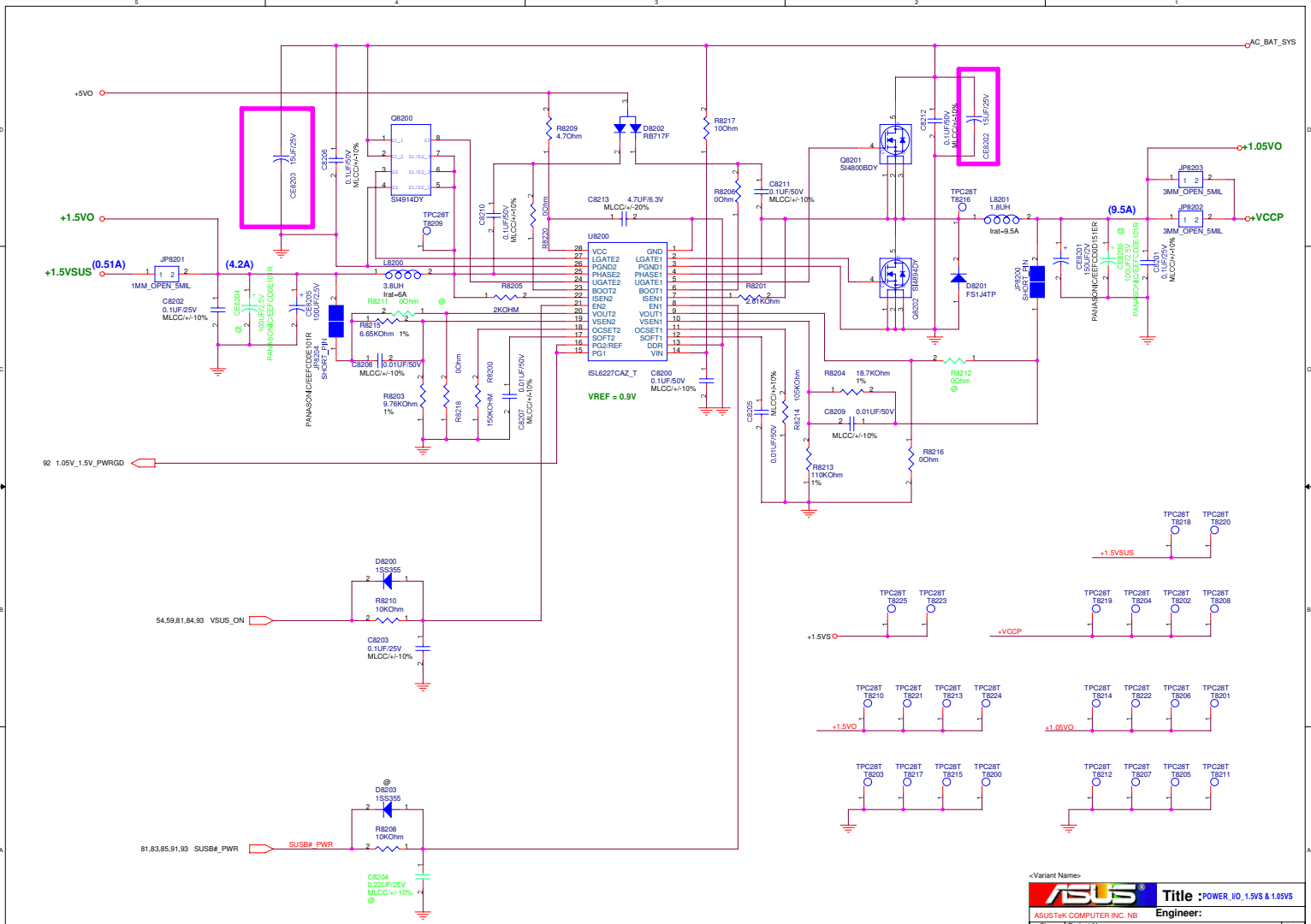

<Variant Name>

ASUSTeK COMPUTER INC. NB	Title : POWER_I/O_1.5VS & 1.05VS	Engineer:
Size: Custom	Project Name: F3Sv/c	Rev: 1.0
Date: 星期三, 二月 21, 2007	Sheet 82 of 94	

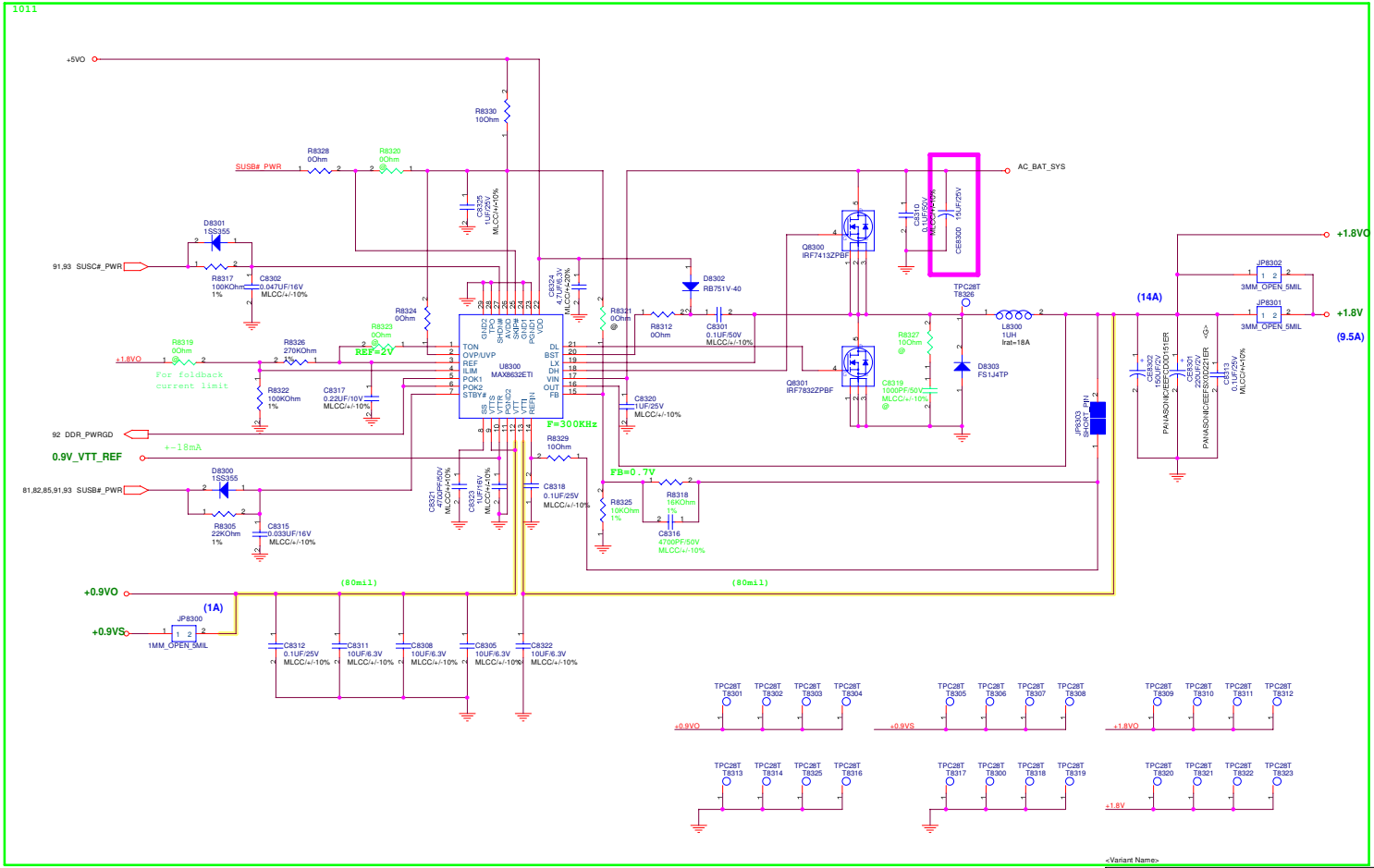

<Variant Name>

ASUSTeK COMPUTER INC. NB

Title : POWER_I/O_DDR & VTT

Engineer:

Size	Project Name	Rev
Custom	F3Sv/c	1.0

Date: 星期一, 一月 21, 2007 Sheet 83 of 94

+2.5VS

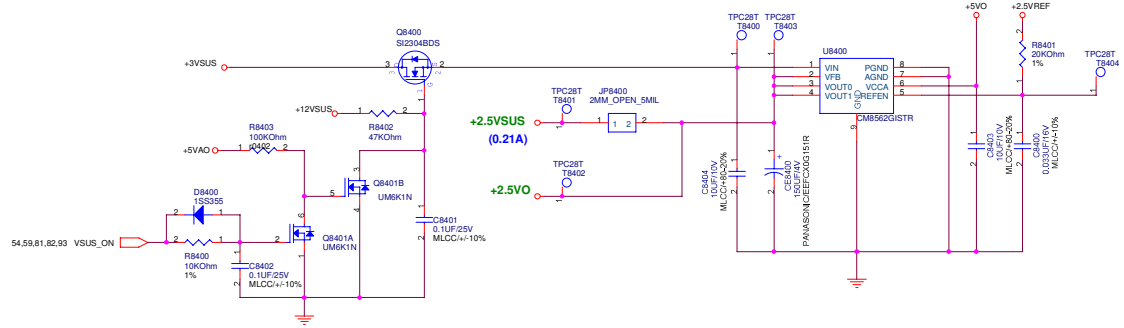

<Variant Name>

ASUS	Title : POWER_I/O_ +2.5VS	
ASUSTeK COMPUTER INC. NB	Engineer:	
Size: Custom	Project Name: F3Sv/c	Rev: 1.0
Date: 星期三, 二月 21, 2007	Sheet 84 of 94	

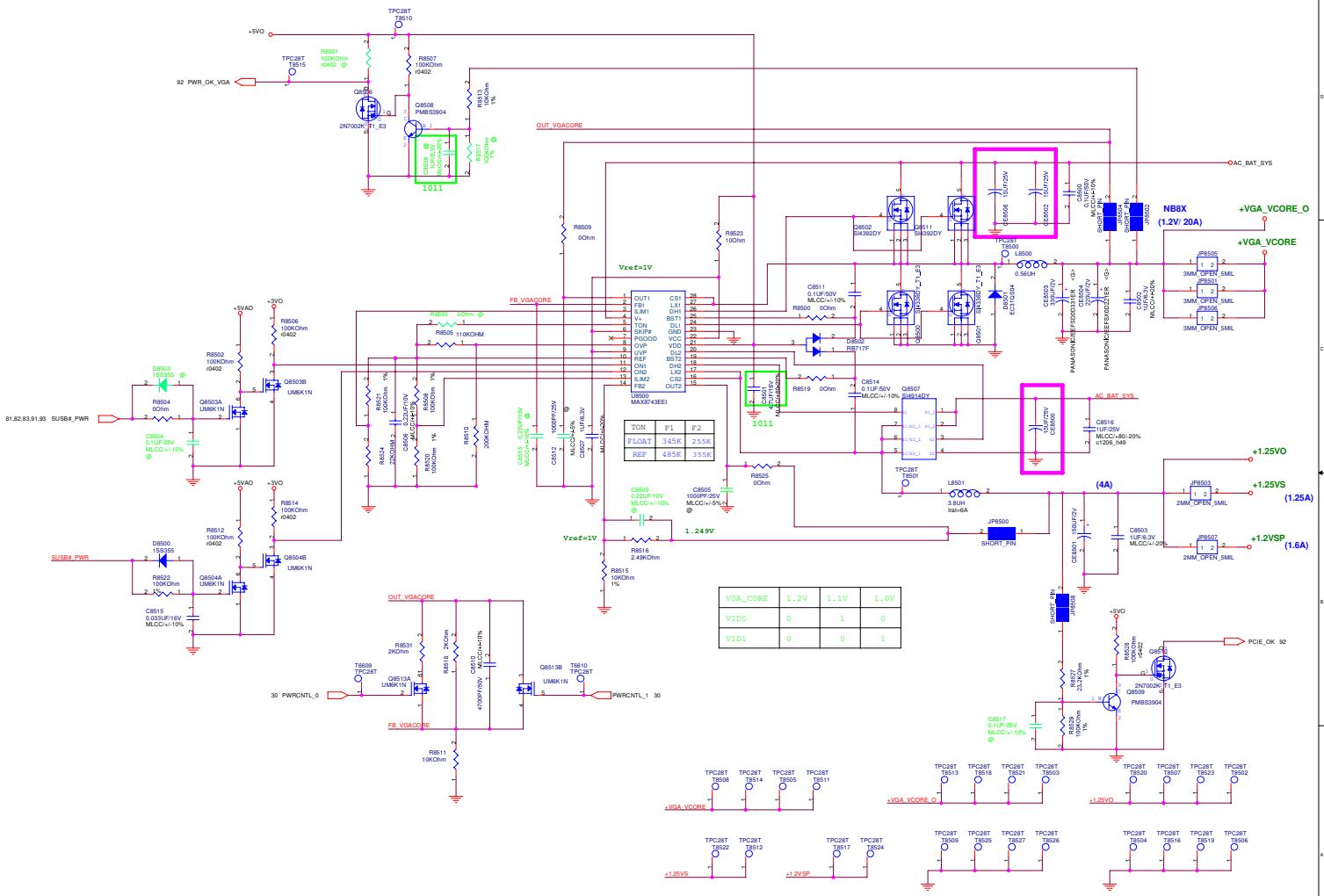
+5VO
TPC28T T8610
TPC28T T8515
92 PWR_OK_VGA
R8501 100KOhm r0402 @
R8507 100KOhm r0402
Q8506 2N7002K^T1_E3
Q8508 PMBS3904
R8512 10KOhm 1%
R8513 10KOhm 1%
C8508 0.1UF/50V MLCC/+/-20%
1011
OUT_VGACORE
AC_BAT_SYS
C8505 10UF/20V
C8506 10UF/20V
C8502 0.1UF/50V MLCC/+/-20%
SHORT_PIN
JP8502
JP8503
NB8X (1.2V/ 20A)
+VGA_VCORE_O
+VGA_VCORE
JP8505
JP8501
JP8506
3MM_OPEN_5MIL
R8509 0Ohm
R8523 10Ohm
Vref=1V
FB_VGACORE
U8500 MAX8743EEI
OUT1 FB1 ILIM1 V+ TON SKIP# PGOOD OVP UVP REF ON1 ON2 ILIM2 FB2
CS1 LX1 DH1 BST1 DL1 GND VCC VDD DL2 BST2 DH2 LX2 CS2 OUT2
TON F1 F2
FLOAT 345K 255K
REF 485K 355K
Q8502 SI4392DY
Q8511 SI4392DY
Q8503 SI4392DY
Q8501 SI4392DY
Q8505 SI4392DY
Q8504 SI4392DY
TPC291 T8500
L8500 0.56UH
D8501 EC31QS04
CE8503 330UF/2V
CE8504 220UF/2V
PANASONIC^EEFSX0D331E4
PANASONIC^EEFSX0D221E4
C8511 0.1UF/50V MLCC/+/-10%
R8500 0Ohm
D8502 RB717F
R8519 0Ohm
C8514 0.1UF/50V MLCC/+/-10%
Q8507 SI4914DY
C8516 1UF/25V MLCC/+-80/-20% c1206_h49
CE8505 10UF/20V
CE8502 10UF/20V
+1.25VO
+1.25VS (1.25A)
+1.25VSP (1.6A)
JP8503 2MM_OPEN_5MIL
JP8507 2MM_OPEN_5MIL
(4A)
L8501 3.8UH Irat=6A
JP8500 SHORT_PIN
C8503 1UF/6.3V MLCC/+/-20%
CE8501 150UF/2V
JP8508 SHORT_PIN
+5VO
R8503 0Ohm @
R8505 110KOHM
R8506 100KOhm r0402
R8502 100KOhm r0402
D8503 1SS355 @
Q8503B UM6K1N
R8504 0Ohm
Q8503A UM6K1N
81,82,83,91,93 SUSB#_PWR
C8504 0.1UF/25V MLCC/+/-10% @
+5VAO
+3VO
R8521 100KOhm 1%
R8508 100KOhm 1%
R8524 22KOHM_2
C8506 0.22UF/10V MLCC/+/-10%
R8520 100KOhm 1%
R8510 200KOHM
C8509 0.22UF/10V MLCC/+/-10% @
C8512 1000PF/25V MLCC/+/-5%
C8507 1UF/6.3V MLCC/+/-20%
C8505 1000PF/25V MLCC/+/-5% @
R8525 0Ohm
1.249V
R8516 2.49KOhm
R8515 10KOhm 1%
R8514 100KOhm r0402
R8512 100KOhm r0402
D8500 1SS355
Q8504B UM6K1N
Q8504A UM6K1N
R8522 100KOhm
C8515 0.033UF/16V MLCC/+/-10%
SUSB#_PWR
VGA_CORE 1.2V 1.1V 1.0V
VID0 0 1 0
VID1 0 0 1
R8531 2KOhm
R8518 2KOhm
C8510 4700PF/50V MLCC/+/-20%
Q8513A UM6K1N
Q8513B UM6K1N
T8609 TPC28T
T8610 TPC28T
30 PWRCNTL_0
PWRCNTL_1 30
R8511 10KOhm
R8523 100KOhm 1%
R8520 100KOhm 1%
C8517 0.1UF/25V MLCC/+/-10% @
Q8510 2N7002K^T1_E3
Q8509 PMBS3904
PCIE_OK 92
TPC28T T8508 T8514 T8505 T8511
+VGA_VCORE
TPC28T T8513 T8518 T8521 T8503
+VGA_VCORE_O
TPC28T T8520 T8507 T8523 T8502
+1.25VO
TPC28T T8522 T8512
+1.25VS
TPC28T T8517 T8524
+1.2VSP
TPC28T T8509 T8525 T8527 T8526
TPC28T T8504 T8516 T8519 T8506
<Variant Name>
Title : POWER_VGA_CORE & RAM
ASUSTeK COMPUTER INC. NB
Engineer:
Size C
Project Name F3Sv/c
Rev 1.0
Date: 星期二, 十月 21, 2007
Sheet 85 of 94

<Variant Name>

ASUSTeK COMPUTER INC. NB	Title : N/A	
	Engineer:	
Size: B	Project Name: ROSA	Rev: 1.0
Date: 星期一, 一月 21, 2007	Sheet 86 of 94	

<Variant Name>

ASUSTeK COMPUTER INC. NB	Title : POWER_SHUTDOWN#	
	Engineer:	
Size: Custom	Project Name: ROSA	Rev: 1.0
Date: 星期二, 二月 21, 2007	Sheet 87 of 94	

POWER PATH & BAT_LEARN

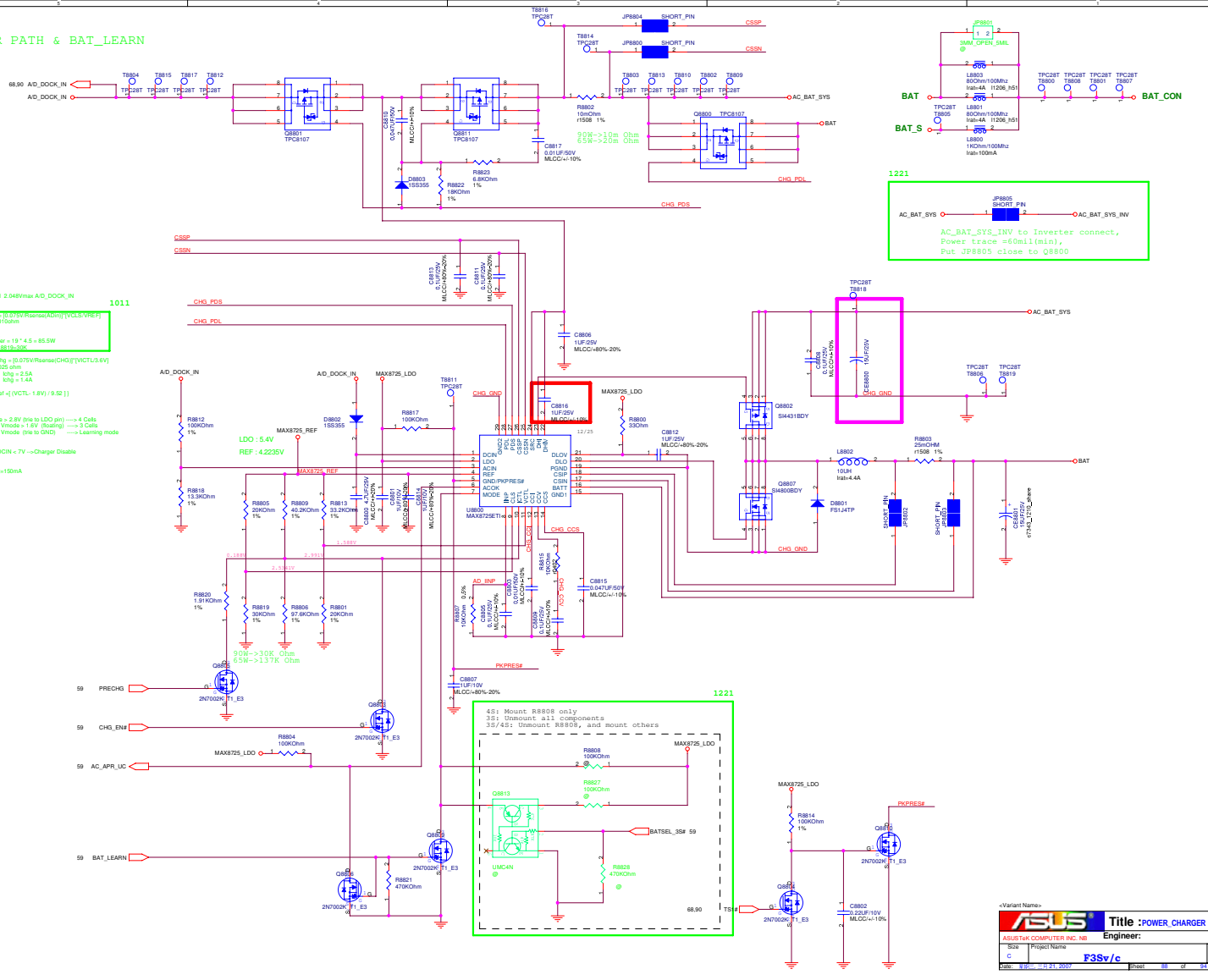

<Variant Name>

	Title : N/A	
ASUSTeK COMPUTER INC. NB	Engineer: Amos_Yu	
Size: Custom	Project Name: ROSA	Rev: 1.0
Date: 星期三, 二月 21, 2007	Sheet 89 of 94	

BATTERY IN DETECT

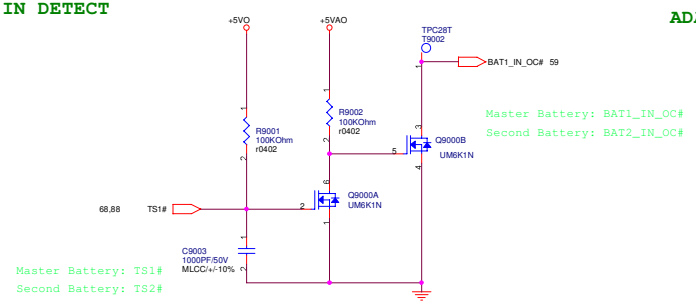

ADAPTER IN DETECT

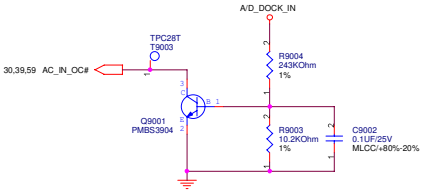

+2.5VREF

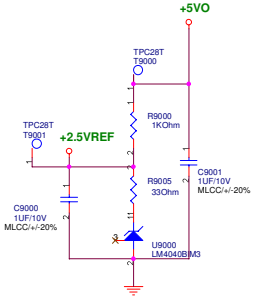

<Variant Name>

ASUSTeK COMPUTER INC. NB	Title : POWER_DETECT	
	Engineer:	
Size: Custom	Project Name: F3Sv/c	Rev: 1.0
Date: 星期三, 二月 21, 2007	Sheet 90 of 94	

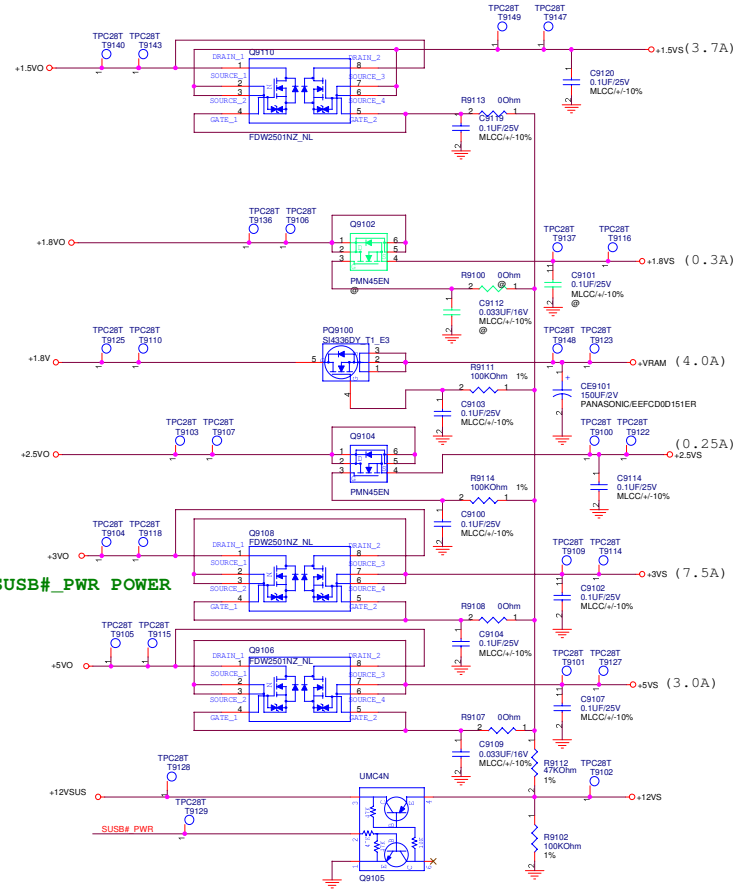

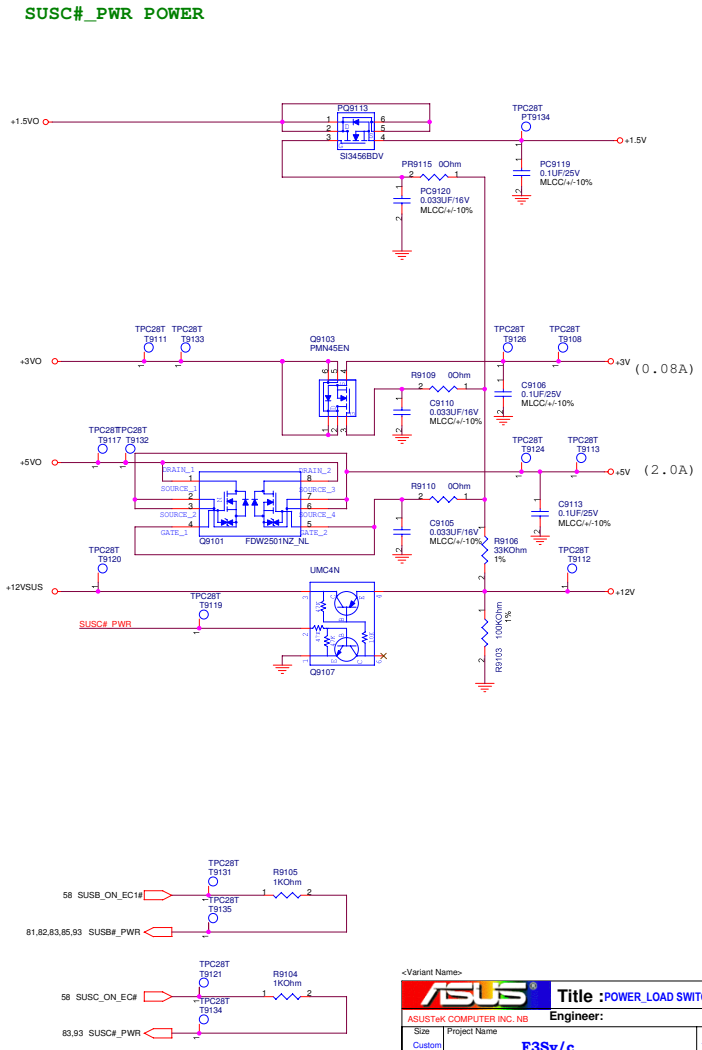

<Variant Name>

ASUSTeK COMPUTER INC. NB	Title : POWER_LOAD SWITCH	Engineer:
Size: Custom	Project Name: F3Sv/c	Rev: 1.0
Date: 星期三, 三月 21, 2007	Sheet 91 of 94	

POWER GOOD DETECTER

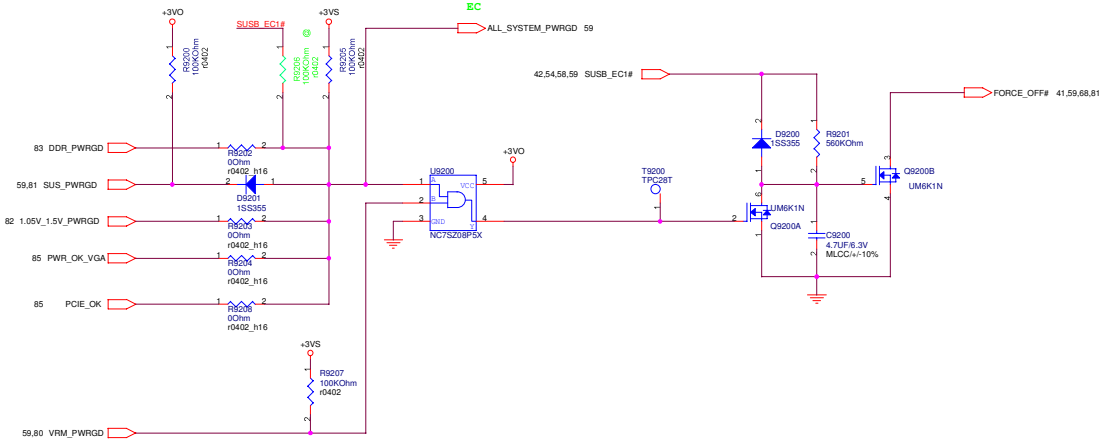

<Variant Name>

ASUSTeK COMPUTER INC. NB	Title : POWER_PROTECT	
	Engineer:	
Size: Custom	Project Name: F3Sv/c	Rev: 1.0
Date: 星期三, 一月 21, 2007	Sheet 92 of 94	

AC_BAT_SYS	AC_BAT_SYS	68,80,81,82,83,85,88
BAT	BAT	88
BAT_CON	BAT_CON	68,88
+2.5VREF	+2.5VREF	84,90
+3VA	+3VA	15,33,41,42,58,59,81
+5VAO	+5VAO	81,84,85,90
+5VO	+5VO	66,81,82,83,84,85,90,91
+5V	+5V	33,42,62,73,91
+5VS	+5VS	17,18,32,35,37,42,54,56,57,60,66,72,80,91
+3VO	+3VO	81,85,91,92
+3VSUS	+3VSUS	15,16,17,18,44,45,54,59,81,84
+3V	+3V	16,33,42,45,47,48,49,54,57,76,78,91
+3VS	+3VS	4,8,12,15,16,17,18,20,21,24,29,30,31,32,33,34,35,37,39,42,47,48,49,51,52,53,54,56,57,59,70,72,73,76,80,91,92
+12VSUS	+12VSUS	81,84,91
+12V	+12V	42,53,57,91
+12VS	+12VS	32,33,54,57,66,91
+1.8VO	+1.8VO	83,91
+1.8V	+1.8V	8,11,12,20,21,42,83,91
+1.8VS	+1.8VS	42,73,91
+0.9VS	+0.9VS	22,26,27,42,83
+0.9VO	+0.9VO	83
+1.05VO	+1.05VO	80,82
+VCCP	+VCCP	4,5,7,11,12,15,18,39,42,82
+1.5VO	+1.5VO	82,91
+1.5VS	+1.5VS	5,12,18,42,47,48,49,54,82,91
+2.5VO	+2.5VO	84,91
+2.5VS	+2.5VS	42,56,91
+VCORE	+VCORE	5,80
+VGA_VCORE	+VGA_VCORE	24,85
+VRAM	+VRAM	25,26,27,29,42,91
+1.2VSP	+1.2VSP	24,25,28,85
+1.25VS	+1.25VS	9,12,18,42,85

FOR POWER TEST

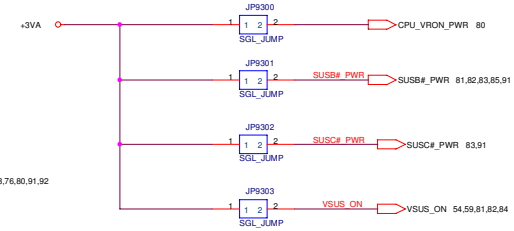

<Variant Name>

ASUSTeK COMPUTER INC. NB	Title : POWER_SIGNAL	Engineer:
Size: Custom	Project Name: F3Sv/c	Rev: 1.0
Date: 星期三, 二月 21, 2007	Sheet 93 of 94	

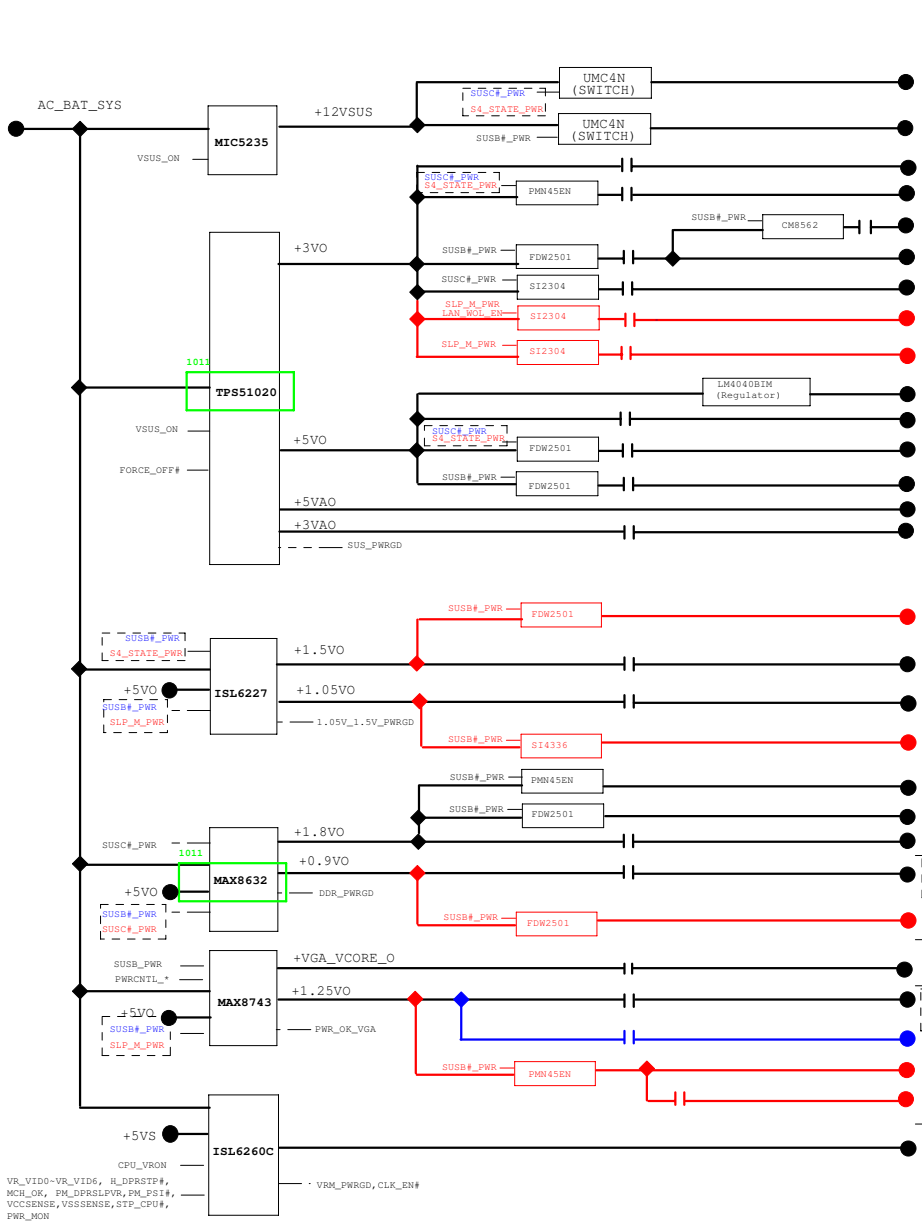

	F3Sv/c Non-IAMT	V1S USE IAMT	Design rating
+12V	(10mA)	(10mA)	
+12VS	(10mA)	(10mA)	
+3VSUS	(0.525A)	(0.48A)	
+3V	(0.08A)	(1.31A)	
+2.5VS	(0.24A)	(0.11A)	
+3VS	(7.498A)	(6.46A)	(7.5A)
+3VSG		(0.2A)	
+3VM		(0.82A)	
+3VM_CLK		(0.19A)	
+2.5VREF	(10mA)	(10mA)	
+5VSUS	(0.01A)	(0.01A)	
+5V	(2A)	(1.61A)	
+5VS	(3.047A)	(4.45A)	(6A)
+5VA	(0.001A)	(0.01A)	
+3VA	(0.209A)	(0.01A)	
+1.5VS		(3.22A)	(2.6A)
+1.5VS +1.5V	(3.685A)	(0.2A)	
+VCCP +1.05VM	(9.851A)	(0.54A)	
+VCCP		(7.31A)	(9.5A)
+1.8VS		(0.26A)	
+VRAM	(4.3A)	(10.7A)	(9.5A)
+1.8V	(9.598A)	(8.5A)	
+0.9VS +0.9V	(1A)	(1A)	
+0.9VS		(1A)	(2A)
+VGA_VCORE	(20A)	(20A)	M76 (20A)
+1.25VS +1.25VM	(1.85A)	(1.64A)	
+1.2VSP	(1.618A)		
+1.25VS		(0.75A)	(2.9A)
+1.2VSP		(1.45A)	
+VCORE	(44A)	(44A)	

<Variant Name>

ASUSTeK COMPUTER INC. NB

Title : POWER_FLOWCHART

Engineer:

Size	Project Name	Rev
Custom	F3Sv/c	1.0

Date: 8 10 - - 11 21, 2007 Sheet 94 of 94

Rev	Date	Description
1.0	2006/10/	1. Initial release.
1.1	2006/12/28	1. Initial release.

Rev	Date	Description

<Variant Name>

ASUSTek COMPUTER INC	Title : History	
	Engineer: *Jack Chen*	
Size: Custom	Project Name: F3Sv	Rev: 1.0
Date: 星期三, 三月 21, 2007	Sheet 95 of 95	