ZZZ

PCB

Part Number = DAZ0J200100

Compal Confidential

K73 Schematics Document

AMD APU Zacate-FT1 + FCH Hudson-M1 + GPU Seymour XT-M2

2010-02-22

REV:0.22

Security Classification	Compal Secret Data		
Issued Date	2010/06/30	Deciphered Date	2012/06/30

THIS SHEET OF ENGINEERING DRAWING IS THE PROPRIETARY PROPERTY OF COMPAL ELECTRONICS, INC. AND CONTAINS CONFIDENTIAL AND TRADE SECRET INFORMATION. THIS SHEET MAY NOT BE TRANSFERED FROM THE CUSTODY OF THE COMPETENT DIVISION OF R&D DEPARTMENT EXCEPT AS AUTHORIZED BY COMPAL ELECTRONICS, INC. NEITHER THIS SHEET NOR THE INFORMATION IT CONTAINS MAY BE USED BY OR DISCLOSED TO ANY THIRD PARTY WITHOUT PRIOR WRITTEN CONSENT OF COMPAL ELECTRONICS, INC.

Compal Electronics, Inc.

Title: P01-Cover Page

Size: B | Document Number: LA7323P | Rev: 0.22

Date: Friday, March 04, 2011 | Sheet 1 of 47

Compal confidential
LA-7323P

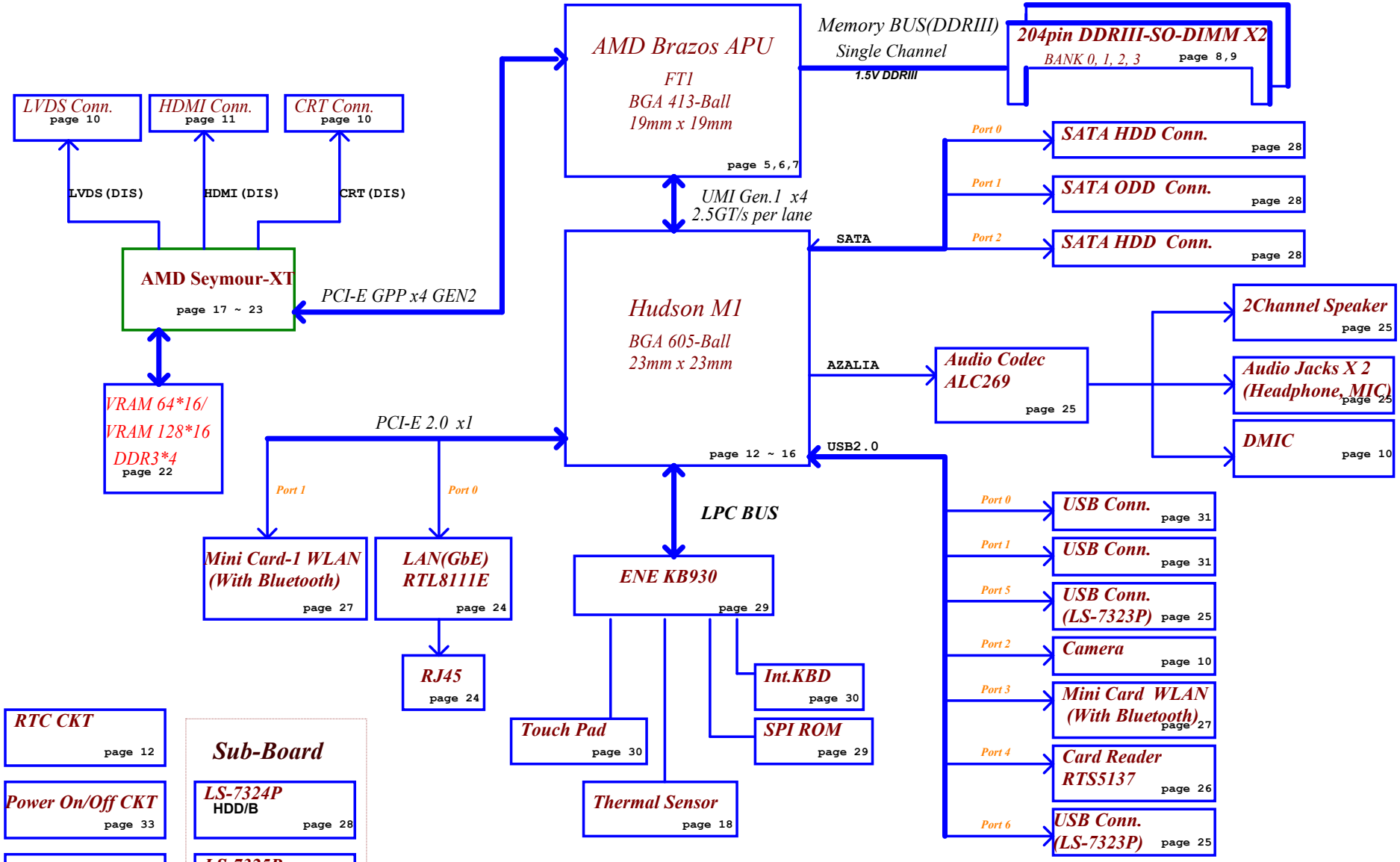

Security Classification	Compal Secret Data		
Issued Date	2010/06/30	Deciphered Date	2012/06/30

THIS SHEET OF ENGINEERING DRAWING IS THE PROPRIETARY PROPERTY OF COMPAL ELECTRONICS, INC. AND CONTAINS CONFIDENTIAL AND TRADE SECRET INFORMATION. THIS SHEET MAY NOT BE TRANSFERED FROM THE CUSTODY OF THE COMPETENT DIVISION OF R&D DEPARTMENT EXCEPT AS AUTHORIZED BY COMPAL ELECTRONICS, INC. NEITHER THIS SHEET NOR THE INFORMATION IT CONTAINS MAY BE USED BY OR DISCLOSED TO ANY THIRD PARTY WITHOUT PRIOR WRITTEN CONSENT OF COMPAL ELECTRONICS, INC.

Compal Electronics, Inc.

Title: P02-Block Diagrams

Size: B | Document Number: LA7323P | Rev: 0.22

Date: Friday, March 04, 2011 | Sheet 2 of 47

Voltage Rails

Power Plane	Description	S1	S3	S5
VIN	Adapter power supply (19V)	N/A	N/A	N/A
B+	AC or battery power rail for power circuit.	N/A	N/A	N/A
+APU_CORE	Core voltage for CPU (0.7-1.2V)	ON	OFF	OFF
+APU_CORE_NB	1.0V switched power rail	ON	OFF	OFF
+1.5V	1.5V power rail for CPU VDDIO and DDRIII	ON	ON	OFF
+0.75VS	0.75VS switched power rail for DDR terminator	ON	OFF	OFF
+1.0VS	1.0V switched power rail for NB VDDC & VGA	ON	OFF	OFF
+1.1VS	1.1VS switched power rail	ON	OFF	OFF
+1.8VS	1.8V switched power rail	ON	OFF	OFF
+3VALW	3.3V always on power rail	ON	ON	ON*
+3V_LAN	3.3V power rail for LAN	ON	ON(WOL)	OFF
+3VS	3.3V switched power rail	ON	OFF	OFF
+5VALW	5V always on power rail	ON	ON	ON*
+5VS	5V switched power rail	ON	OFF	OFF
+VSB	VSB always on power rail	ON	ON	ON*
+RTCVCC	RTC power	ON	ON	ON
+1.1VALW	1.1V always on power rail	ON	ON	ON*

Note : ON* means that this power plane is ON only with AC power available, otherwise it is OFF.

SMBUS Control Table

	SOURCE	MIINI1	BATT	APU	FCH	SODIMM	VRAM
EC_SMB_CK1 EC_SMB_DA1	KB930	X	V	X	X	X	X
EC_SMB_CK2 EC_SMB_DA2	KB930	X	X	V	V	X	V
FCH_SMCLK0 FCH_SMDAT0	PCH	V	X	X	X	V	X
FCH_SMCLK3 FCH_SMDAT3	PCH	X	X	V	X	X	X

FCH Hudson-M1 USB Port List	
USB1.1	
Port0	NC
Port1	NC
USB2.0	
Port0	JUSB1
Port1	JUSB2
Port2	Camera
Port3	JMINI(WLAN)
Port4	Card Reader
Port5	JUSB3
Port6	NC
Port7	NC
Port8	NC
Port9	NC
Port10	NC
Port11	NC
Port12	NC
Port13	NC

Brazos PCIE Port List		
APU	PCIE0	GPU PCIE x4
	PCIE1	
	PCIE2	
	PCIE3	
FCH	PCIE0	LAN
	PCIE1	WLAN
	PCIE2	NC
	PCIE3	NC

FCH Hudson-M1 SATA Port List	
SATA0	HDD
SATA1	ODD
SATA2	NC
SATA3	NC
SATA4	NC
SATA5	NC

SCL0, SDA0 (Primary SMBUS in the S0 domain)
SCL1, SDA1 (Secondary SMBUS supporting ASF)
SCL2, SDA2 (Primary SMBUS in the S5 domain)
SCL3, SDA3 (Primary low-voltage SBMBUS for Processor TSI)
SCL4, SDA4 (Primary SMBUS in the S5 domain)

BOM Structure

15@ : E240 1.5GHz
16@ :E350 1.6GHz
X76@ : VRAM second source
LS@ : Level Shift
NLS@ :non Level Shift
USB30@ :USB3.0

Symbol Note :

: means Digital Ground

: means Analog Ground

THIS SHEET OF ENGINEERING DRAWING IS THE PROPRIETARY PROPERTY OF COMPAL ELECTRONICS, INC. AND CONTAINS CONFIDENTIAL AND TRADE SECRET INFORMATION. THIS SHEET MAY NOT BE TRANSFERED FROM THE CUSTODY OF THE COMPETENT DIVISION OF R&D DEPARTMENT EXCEPT AS AUTHORIZED BY COMPAL ELECTRONICS, INC. NEITHER THIS SHEET NOR THE INFORMATION IT CONTAINS MAY BE USED BY OR DISCLOSED TO ANY THIRD PARTY WITHOUT PRIOR WRITTEN CONSENT OF COMPAL ELECTRONICS, INC.

Power-Up/Down Sequence

1. All the ASIC supplies must fully reach their respective nominal voltages within 20 ms of the start of the ramp-up sequence, though a shorter ramp-up duration is preferred.

2. VDDR3 should ramp-up before or simultaneously with VDDC.

3. For LVDS, DPx_VDD10 should ramp-up before DPx_VDD18 and the PCIe Reference clock should begin before DPx_VDD18. For power-down, DPx_VDD18 should ramp-down before DPx_VDD10.

4. The external pull-ups on the DDC/AUX signals (if applicable) should ramp-up before or after both VDDC and VDD_CT have ramped up.

5.VDDC and VDD_CT should not ramp-up simultaneously. (e.g., VDDC should reach 90% before VDD_CT starts to ramp-up (or vice versa).)

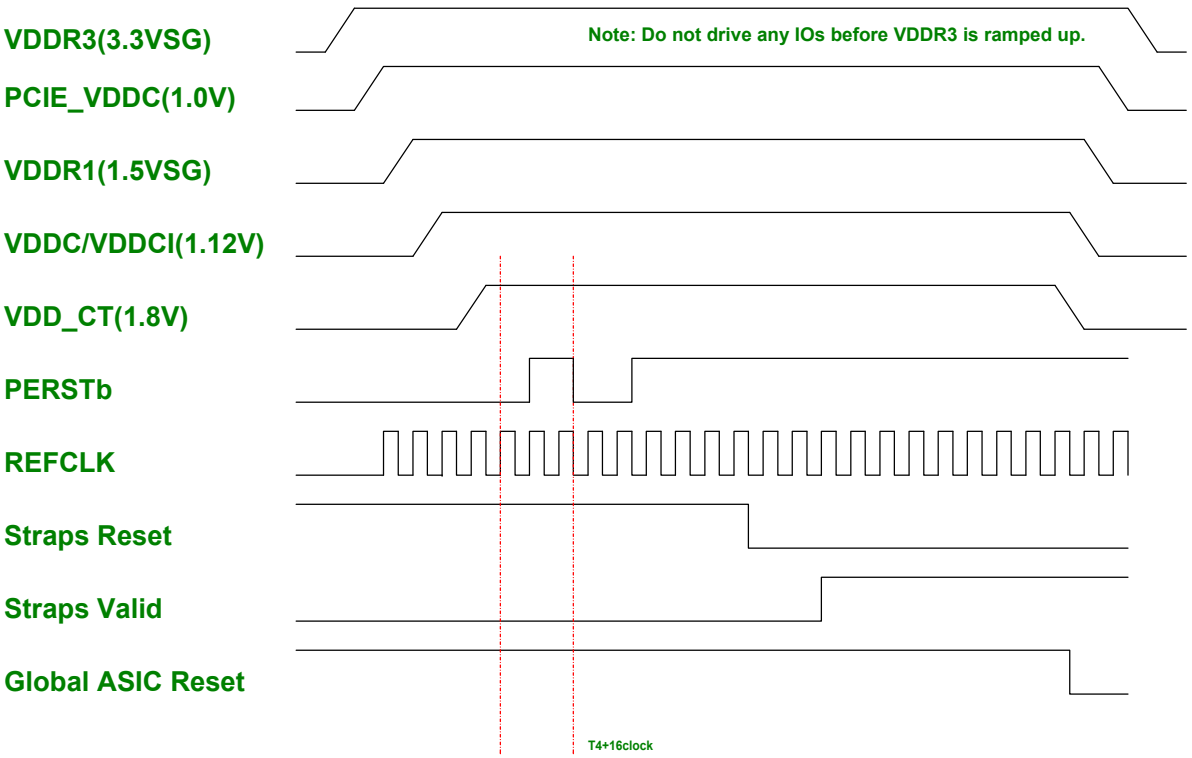

Without BACO option :

PE_GPIO0 : Low -> Reset dGPU ; High ->Normal operation
PE_GPIO1 : Low -> dGPU Power OFF ; High -> dGPU Power ON

BACO option :

PE_GPIO0 : High ->Normal operation (dGPU is not reseton BACO mode)
PE_GPIO1 : Low -> dGPU Power OFF ; High -> dGPU Power ON (always High)

dGPU Power Pins	Voltage	PX 3.0	BACO Mode	Max current
PCIE_PVDD, PCIE_VDDR, TSVDD, VDDR4, VDD_CT, DPE_PVDD, DP[F:E]_VDD18, DP[D:A]_PVDD, DP[D:A]_VDD18, AVDD, VDD1DI, A2VDDQ, VDD2DI, DPLL_PVDD, MPV18, and SPV18	1.8V	OFF	ON	1679mA
DP[F:E]_VDD10, DP[D:A]_VDD10, DPLL_VDDC, and SPV10	1.0V	OFF	ON	575mA
PCIE_VDDC	1.0V	OFF	ON	2A
VDDR3 , and A2VDD	3.3V	OFF	ON	190mA
BIF_VDDC (current consumption = 55mA@1.0V, in BACO mode)	Same as VDDC	OFF	ON Same as PCIE_VDDC	70mA
VDDR1	1.5V	OFF	OFF	2.8A
VDDC/VDDCI	1.12V	OFF	OFF	12.9A

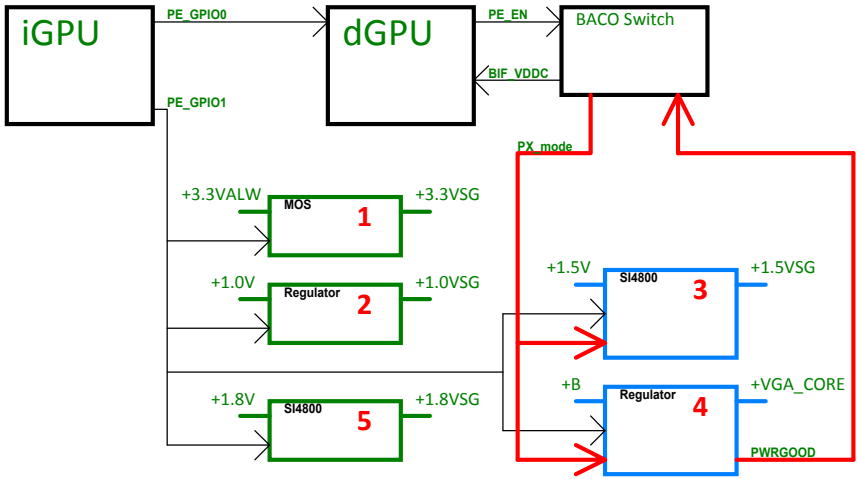

Security Classification	Compal Secret Data		
Issued Date	2010/08/20	Deciphered Date	2012/06/30

THIS SHEET OF ENGINEERING DRAWING IS THE PROPRIETARY PROPERTY OF COMPAL ELECTRONICS, INC. AND CONTAINS CONFIDENTIAL AND TRADE SECRET INFORMATION. THIS SHEET MAY NOT BE TRANSFERED FROM THE CUSTODY OF THE COMPETENT DIVISION OF R&D DEPARTMENT EXCEPT AS AUTHORIZED BY COMPAL ELECTRONICS, INC. NEITHER THIS SHEET NOR THE INFORMATION IT CONTAINS MAY BE USED BY OR DISCLOSED TO ANY THIRD PARTY WITHOUT PRIOR WRITTEN CONSENT OF COMPAL ELECTRONICS, INC.

Compal Electronics, Inc.

Title: P04-dGPU Block Diagram

Size: B | Document Number: LA7323P | Rev: 0.22

Date: Friday, March 04, 2011 | Sheet 4 of 47

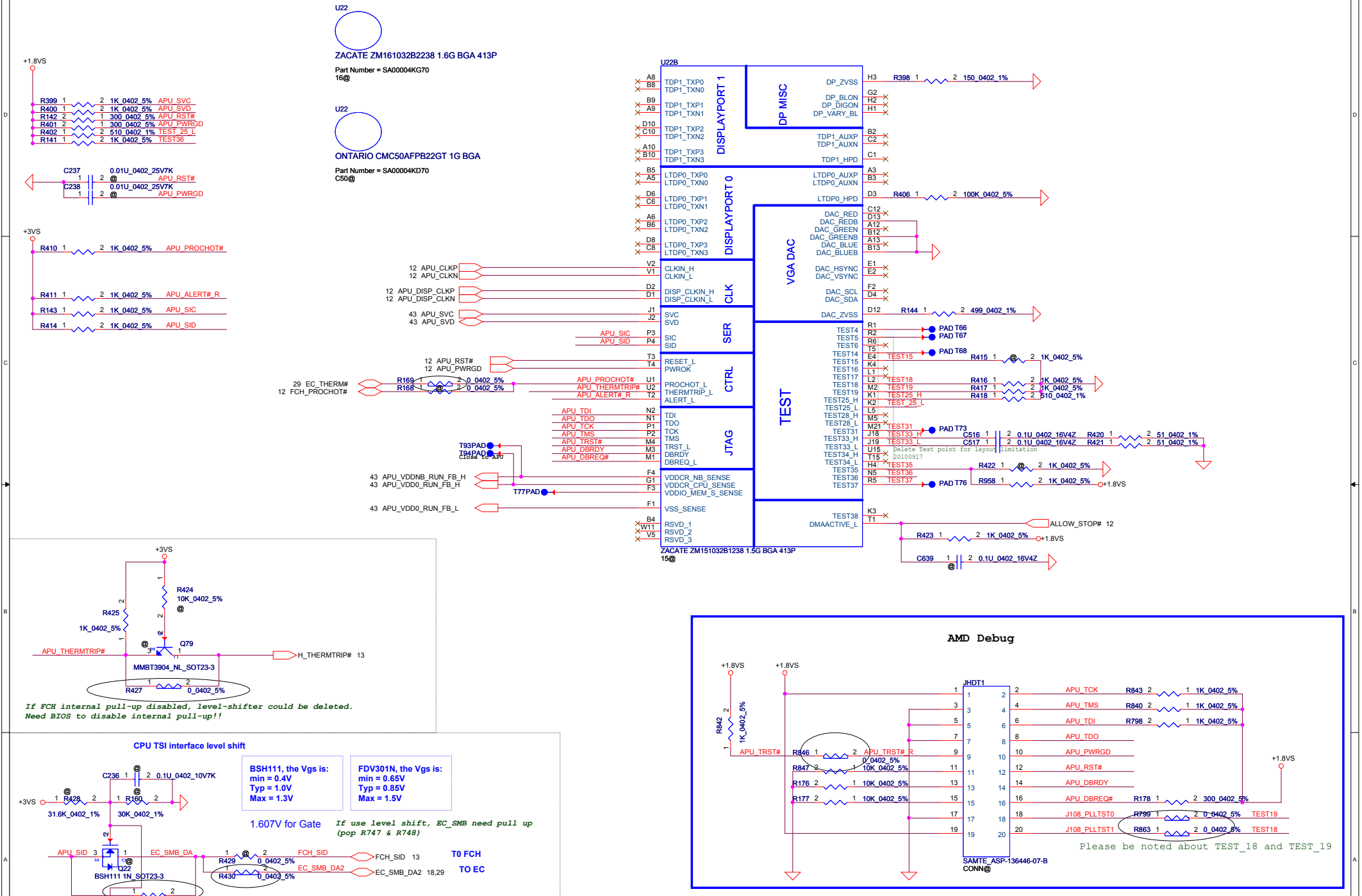

Security Classification	Compal Secret Data		
Issued Date	2010/08/20	Deciphered Date	2012/06/30

THIS SHEET OF ENGINEERING DRAWING IS THE PROPRIETARY PROPERTY OF COMPAL ELECTRONICS, INC. AND CONTAINS CONFIDENTIAL AND TRADE SECRET INFORMATION. THIS SHEET MAY NOT BE TRANSFERED FROM THE CUSTODY OF THE COMPETENT DIVISION OF R&D DEPARTMENT EXCEPT AS AUTHORIZED BY COMPAL ELECTRONICS, INC. NEITHER THIS SHEET NOR THE INFORMATION IT CONTAINS MAY BE USED BY OR DISCLOSED TO ANY THIRD PARTY WITHOUT PRIOR WRITTEN CONSENT OF COMPAL ELECTRONICS, INC.

Compal Electronics, Inc.

Title: P05-FT1 CTRL/DP/CRT

Size: Custom | Document Number: LA7323P | Rev: 0.22

Date: Friday, March 04, 2011 | Sheet 5 of 47

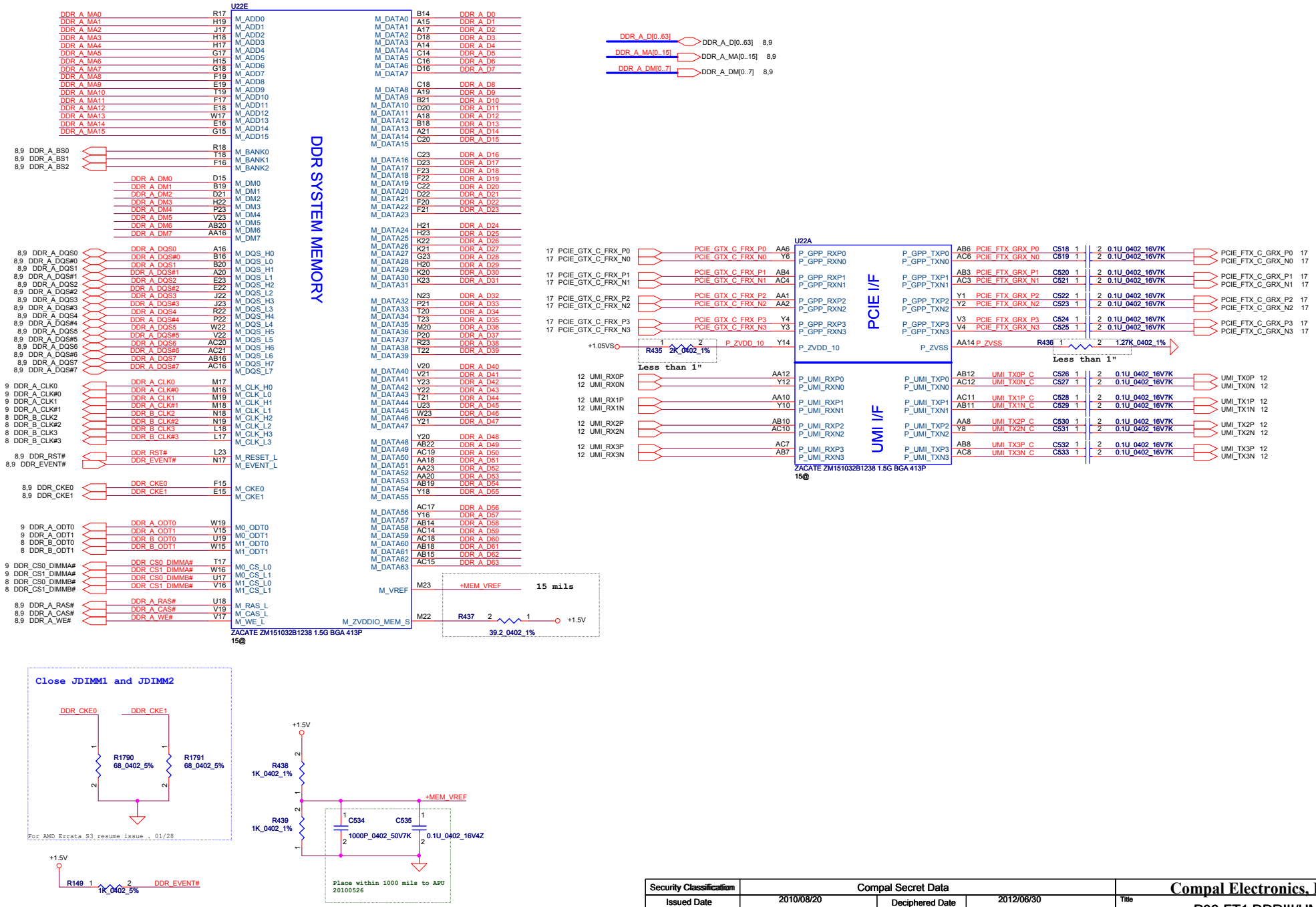

Security Classification	Compal Secret Data		
Issued Date	2010/08/20	Deciphered Date	2012/06/30

THIS SHEET OF ENGINEERING DRAWING IS THE PROPRIETARY PROPERTY OF COMPAL ELECTRONICS, INC. AND CONTAINS CONFIDENTIAL AND TRADE SECRET INFORMATION. THIS SHEET MAY NOT BE TRANSFERED FROM THE CUSTODY OF THE COMPETENT DIVISION OF R&D DEPARTMENT EXCEPT AS AUTHORIZED BY COMPAL ELECTRONICS, INC. NEITHER THIS SHEET NOR THE INFORMATION IT CONTAINS MAY BE USED BY OR DISCLOSED TO ANY THIRD PARTY WITHOUT PRIOR WRITTEN CONSENT OF COMPAL ELECTRONICS, INC.

Compal Electronics, Inc.

Title: P06-FT1 DDRIII/UMI/PCIE

Size: Custom | Document Number: LA7323P | Rev: 0.22

Date: Friday, March 04, 2011 | Sheet 6 of 47

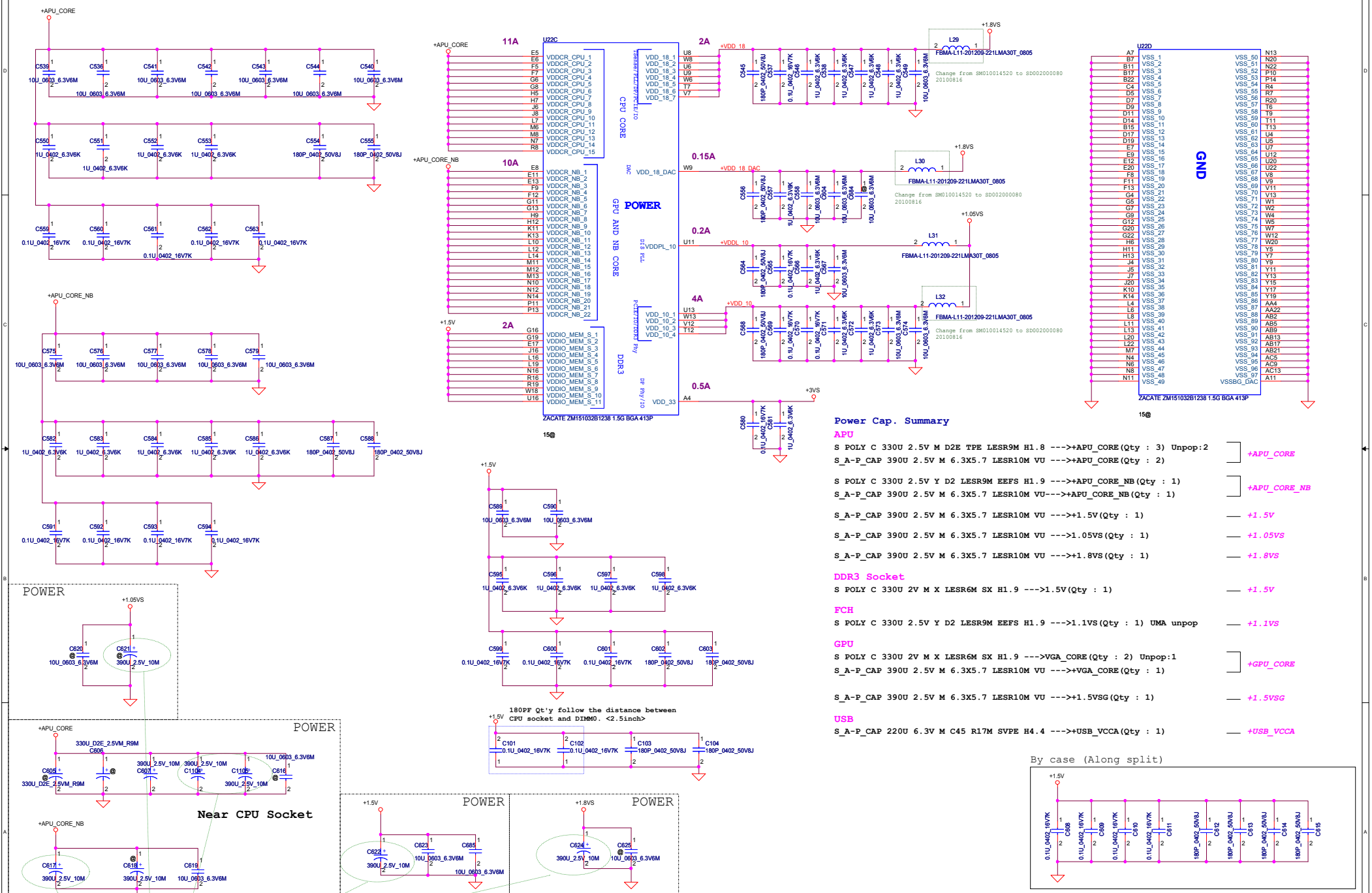

Power Cap. Summary

APU

S POLY C 330U 2.5V M D2E TPE LESR9M H1.8 --->+APU_CORE(Qty : 3) Unpop:2
S_A-P_CAP 390U 2.5V M 6.3X5.7 LESR10M VU --->+APU_CORE(Qty : 2) — *+APU_CORE*

S POLY C 330U 2.5V Y D2 LESR9M EEFS H1.9 --->+APU_CORE_NB(Qty : 1)
S_A-P_CAP 390U 2.5V M 6.3X5.7 LESR10M VU--->+APU_CORE_NB(Qty : 1) — *+APU_CORE_NB*

S_A-P_CAP 390U 2.5V M 6.3X5.7 LESR10M VU --->+1.5V(Qty : 1) — *+1.5V*

S_A-P_CAP 390U 2.5V M 6.3X5.7 LESR10M VU --->1.05VS(Qty : 1) — *+1.05VS*

S_A-P_CAP 390U 2.5V M 6.3X5.7 LESR10M VU --->+1.8VS(Qty : 1) — *+1.8VS*

DDR3 Socket

S POLY C 330U 2V M X LESR6M SX H1.9 --->1.5V(Qty : 1) — *+1.5V*

FCH

S POLY C 330U 2.5V Y D2 LESR9M EEFS H1.9 --->1.1VS(Qty : 1) UMA unpop — *+1.1VS*

GPU

S POLY C 330U 2V M X LESR6M SX H1.9 --->VGA_CORE(Qty : 2) Unpop:1
S_A-P_CAP 390U 2.5V M 6.3X5.7 LESR10M VU --->+VGA_CORE(Qty : 1) — *+GPU_CORE*

S_A-P_CAP 390U 2.5V M 6.3X5.7 LESR10M VU --->+1.5VSG(Qty : 1) — *+1.5VSG*

USB

S_A-P_CAP 220U 6.3V M C45 R17M SVPE H4.4 --->+USB_VCCA(Qty : 1) — *+USB_VCCA*

By case (Along split)

Security Classification	Compal Secret Data		
Issued Date	2010/08/20	Deciphered Date	2012/06/30

THIS SHEET OF ENGINEERING DRAWING IS THE PROPRIETARY PROPERTY OF COMPAL ELECTRONICS, INC. AND CONTAINS CONFIDENTIAL AND TRADE SECRET INFORMATION. THIS SHEET MAY NOT BE TRANSFERRED FROM THE CUSTODY OF THE COMPETENT DIVISION OF R&D DEPARTMENT EXCEPT AS AUTHORIZED BY COMPAL ELECTRONICS, INC. NEITHER THIS SHEET NOR THE INFORMATION IT CONTAINS MAY BE USED BY OR DISCLOSED TO ANY THIRD PARTY WITHOUT PRIOR WRITTEN CONSENT OF COMPAL ELECTRONICS, INC.

Compal Electronics, Inc.

Title: P07-FT1 PWR/VSS

Size: C | Document Number: LA7323P | Rev: 0.22

Date: Friday, March 04, 2011 | Sheet 7 of 47

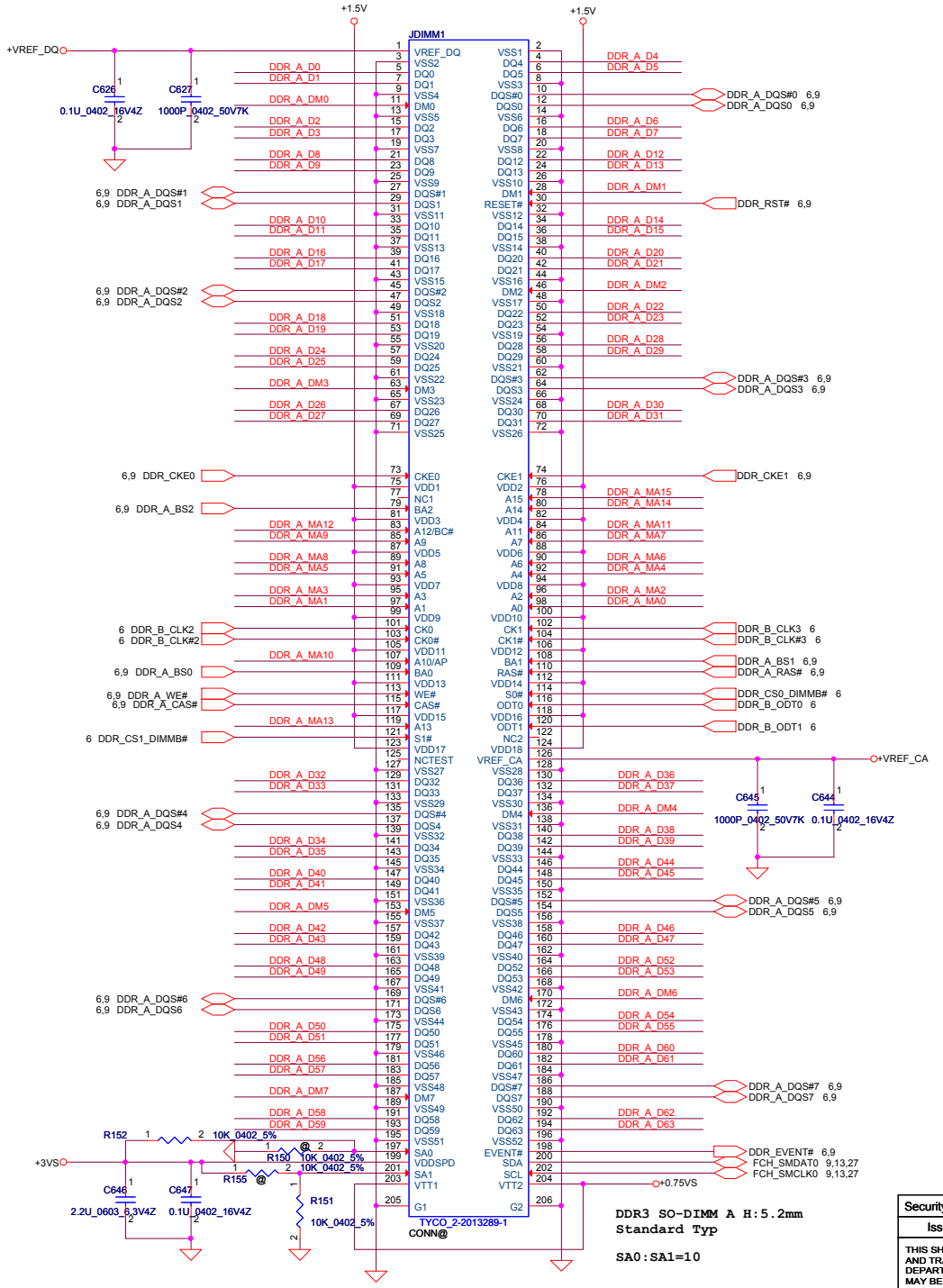

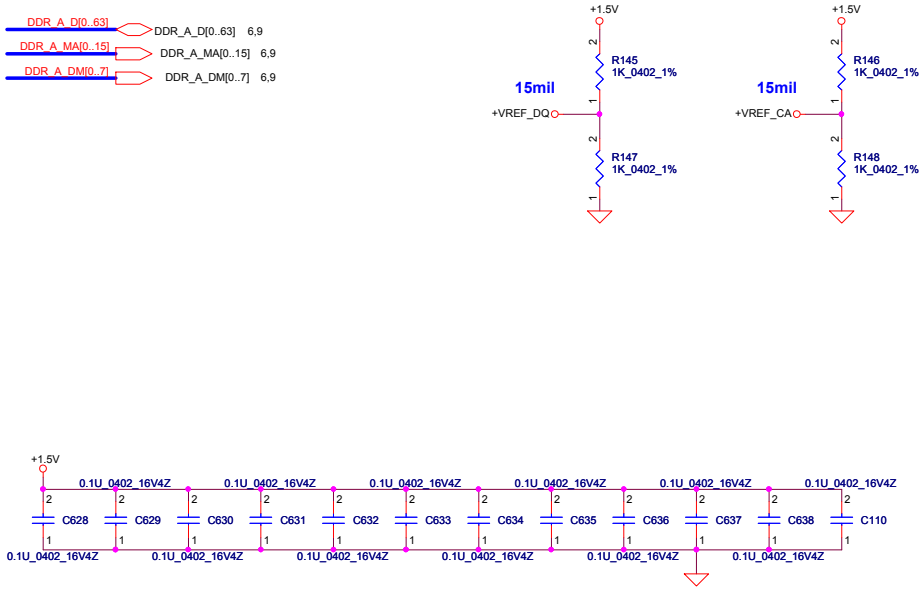

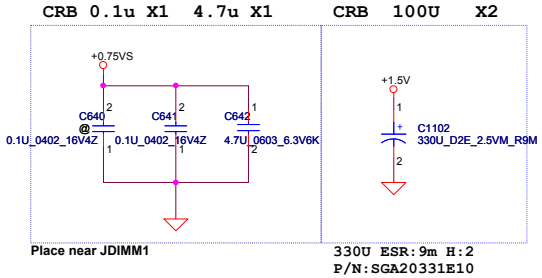

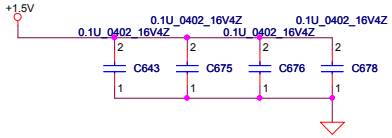

Security Classification	Compal Secret Data		
Issued Date	2010/08/20	Deciphered Date	2012/06/30

THIS SHEET OF ENGINEERING DRAWING IS THE PROPRIETARY PROPERTY OF COMPAL ELECTRONICS, INC. AND CONTAINS CONFIDENTIAL AND TRADE SECRET INFORMATION. THIS SHEET MAY NOT BE TRANSFERED FROM THE CUSTODY OF THE COMPETENT DIVISION OF R&D DEPARTMENT EXCEPT AS AUTHORIZED BY COMPAL ELECTRONICS, INC. NEITHER THIS SHEET NOR THE INFORMATION IT CONTAINS MAY BE USED BY OR DISCLOSED TO ANY THIRD PARTY WITHOUT PRIOR WRITTEN CONSENT OF COMPAL ELECTRONICS, INC.

Compal Electronics, Inc.

Title: P08-DDR3 SODIMM-I Socket

Size: Custom | Document Number: LA7323P | Rev: 0.22

Date: Friday, March 04, 2011 | Sheet 8 of 47

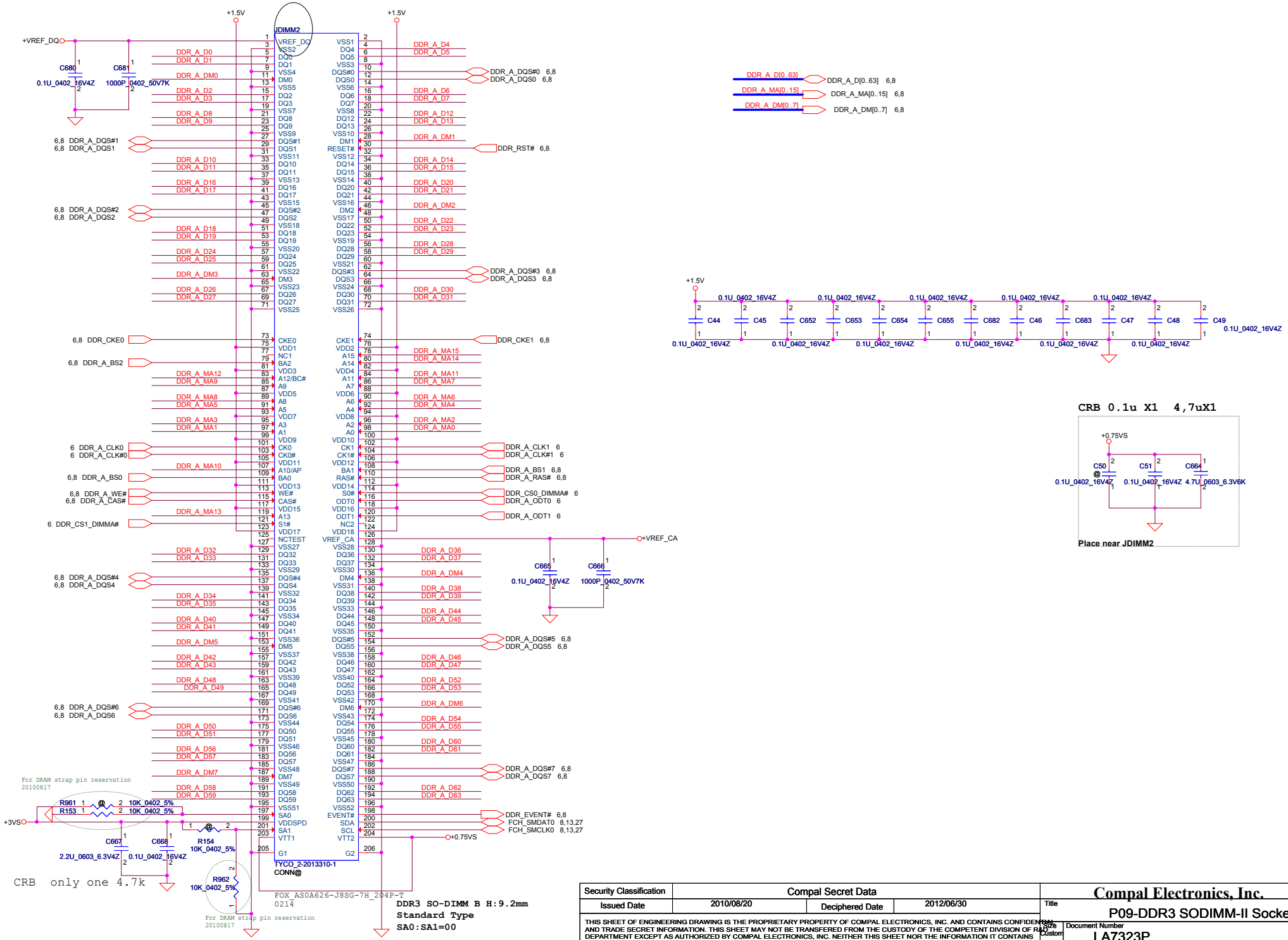

Security Classification	Compal Secret Data		
Issued Date	2010/08/20	Deciphered Date	2012/06/30

THIS SHEET OF ENGINEERING DRAWING IS THE PROPRIETARY PROPERTY OF COMPAL ELECTRONICS, INC. AND CONTAINS CONFIDENTIAL AND TRADE SECRET INFORMATION. THIS SHEET MAY NOT BE TRANSFERED FROM THE CUSTODY OF THE COMPETENT DIVISION OF R&D DEPARTMENT EXCEPT AS AUTHORIZED BY COMPAL ELECTRONICS, INC. NEITHER THIS SHEET NOR THE INFORMATION IT CONTAINS MAY BE USED BY OR DISCLOSED TO ANY THIRD PARTY WITHOUT PRIOR WRITTEN CONSENT OF COMPAL ELECTRONICS, INC.

Compal Electronics, Inc.

Title: P09-DDR3 SODIMM-II Socket

Size: Custom | Document Number: LA7323P | Rev: 0.22

Date: Friday, March 04, 2011 | Sheet 9 of 47

C R T

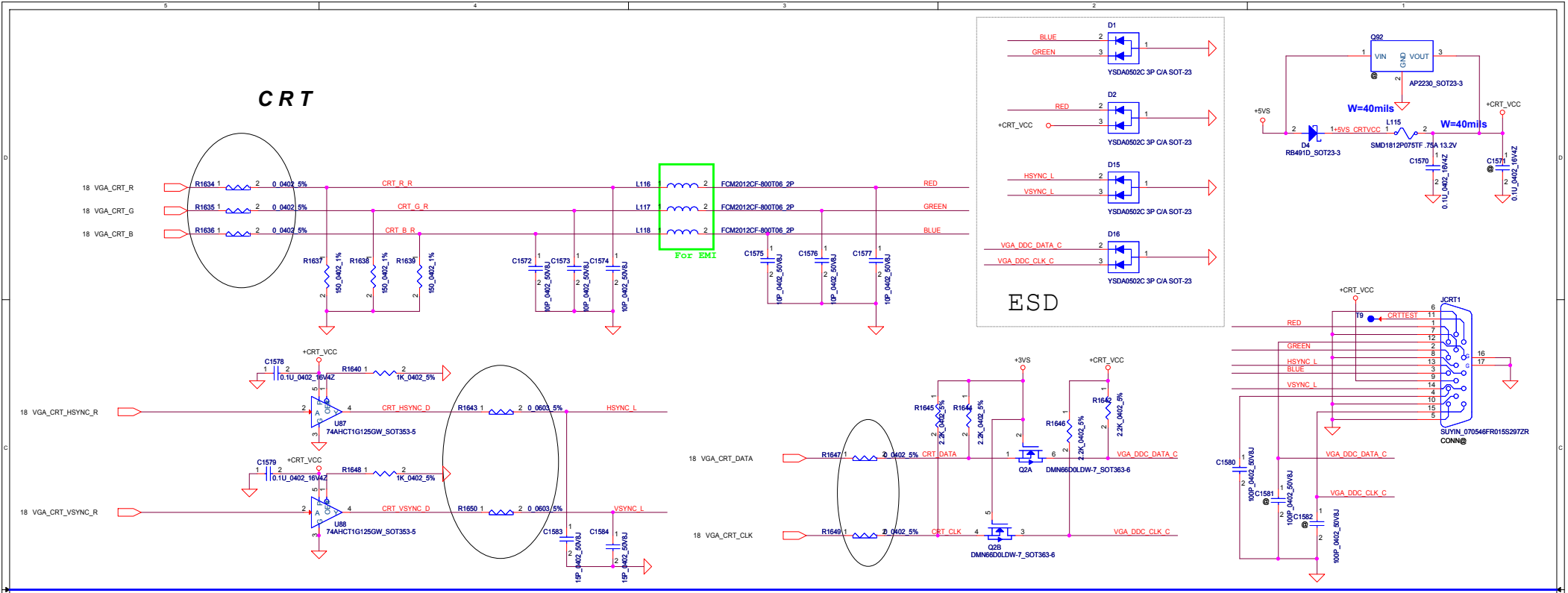

LCD POWER CIRCUIT

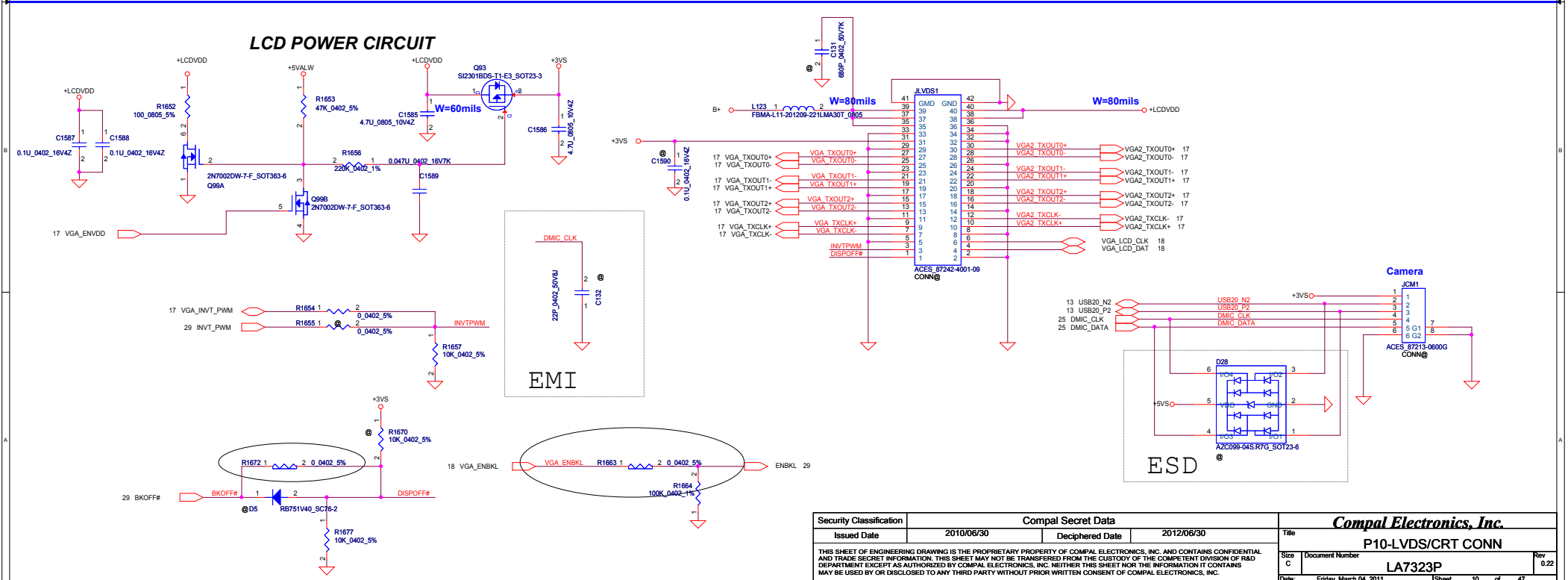

Security Classification	Compal Secret Data		
Issued Date	2010/06/30	Deciphered Date	2012/06/30

THIS SHEET OF ENGINEERING DRAWING IS THE PROPRIETARY PROPERTY OF COMPAL ELECTRONICS, INC. AND CONTAINS CONFIDENTIAL AND TRADE SECRET INFORMATION. THIS SHEET MAY NOT BE TRANSFERRED FROM THE CUSTODY OF THE COMPETENT DIVISION OF R&D DEPARTMENT EXCEPT AS AUTHORIZED BY COMPAL ELECTRONICS, INC. NEITHER THIS SHEET NOR THE INFORMATION IT CONTAINS MAY BE USED BY OR DISCLOSED TO ANY THIRD PARTY WITHOUT PRIOR WRITTEN CONSENT OF COMPAL ELECTRONICS, INC.

Compal Electronics, Inc.

Title: P10-LVDS/CRT CONN

Size: C | Document Number: LA7323P | Rev: 0.22

Date: Friday, March 04, 2011 | Sheet 10 of 47

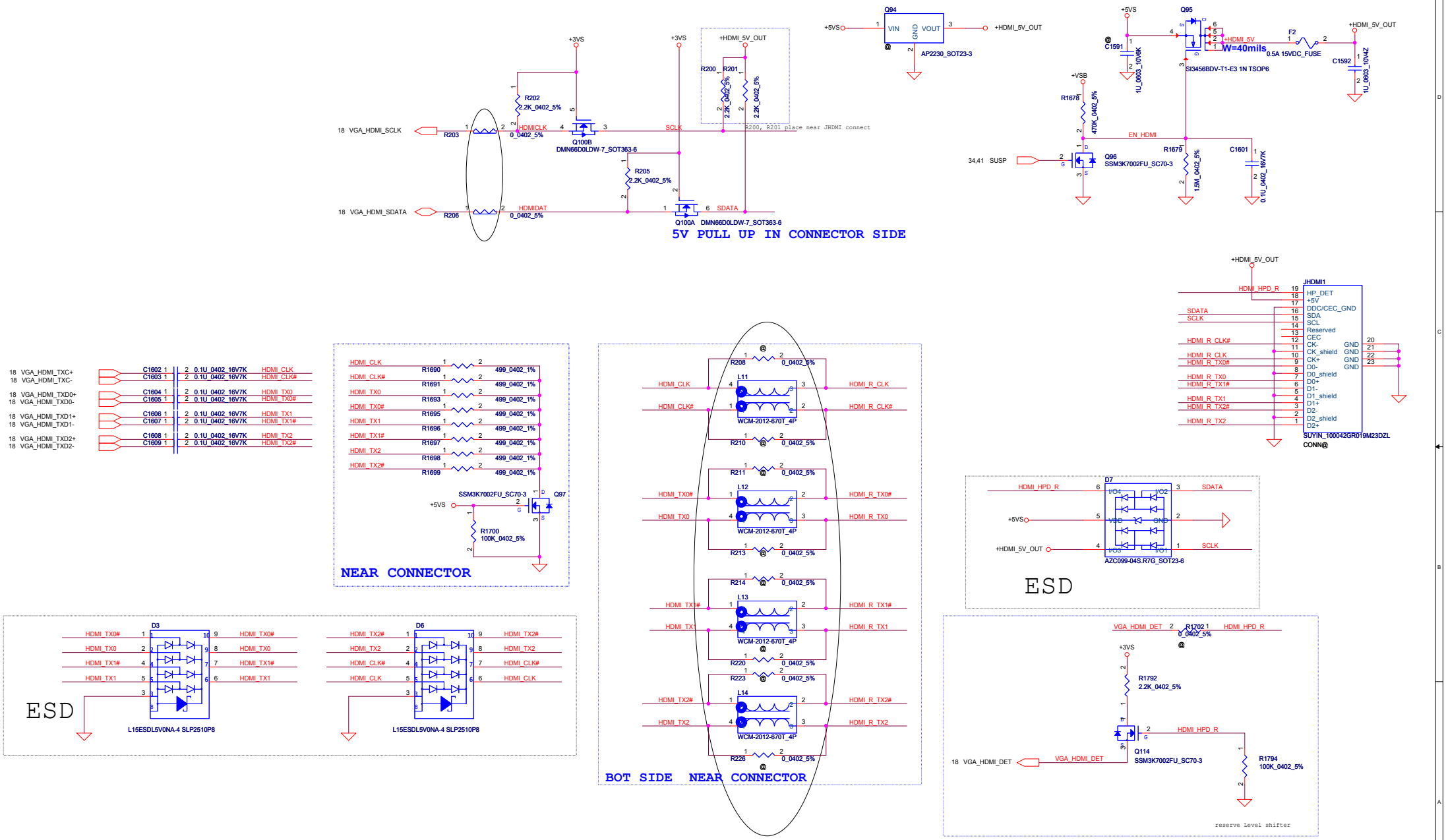

Security Classification	Compal Secret Data		
Issued Date	2010/06/30	Deciphered Date	2012/06/30

THIS SHEET OF ENGINEERING DRAWING IS THE PROPRIETARY PROPERTY OF COMPAL ELECTRONICS, INC. AND CONTAINS CONFIDENTIAL AND TRADE SECRET INFORMATION. THIS SHEET MAY NOT BE TRANSFERED FROM THE CUSTODY OF THE COMPETENT DIVISION OF R&D DEPARTMENT EXCEPT AS AUTHORIZED BY COMPAL ELECTRONICS, INC. NEITHER THIS SHEET NOR THE INFORMATION IT CONTAINS MAY BE USED BY OR DISCLOSED TO ANY THIRD PARTY WITHOUT PRIOR WRITTEN CONSENT OF COMPAL ELECTRONICS, INC.

Compal Electronics, Inc.

Title: P11-HDMI CONN

Size: Custom | Document Number: LA7323P | Rev: 0.22

Date: Friday, March 04, 2011 | Sheet 11 of 47

For PCIE device reset on FS1 (GFX,GLAN,WLAN,LVDS Travis)

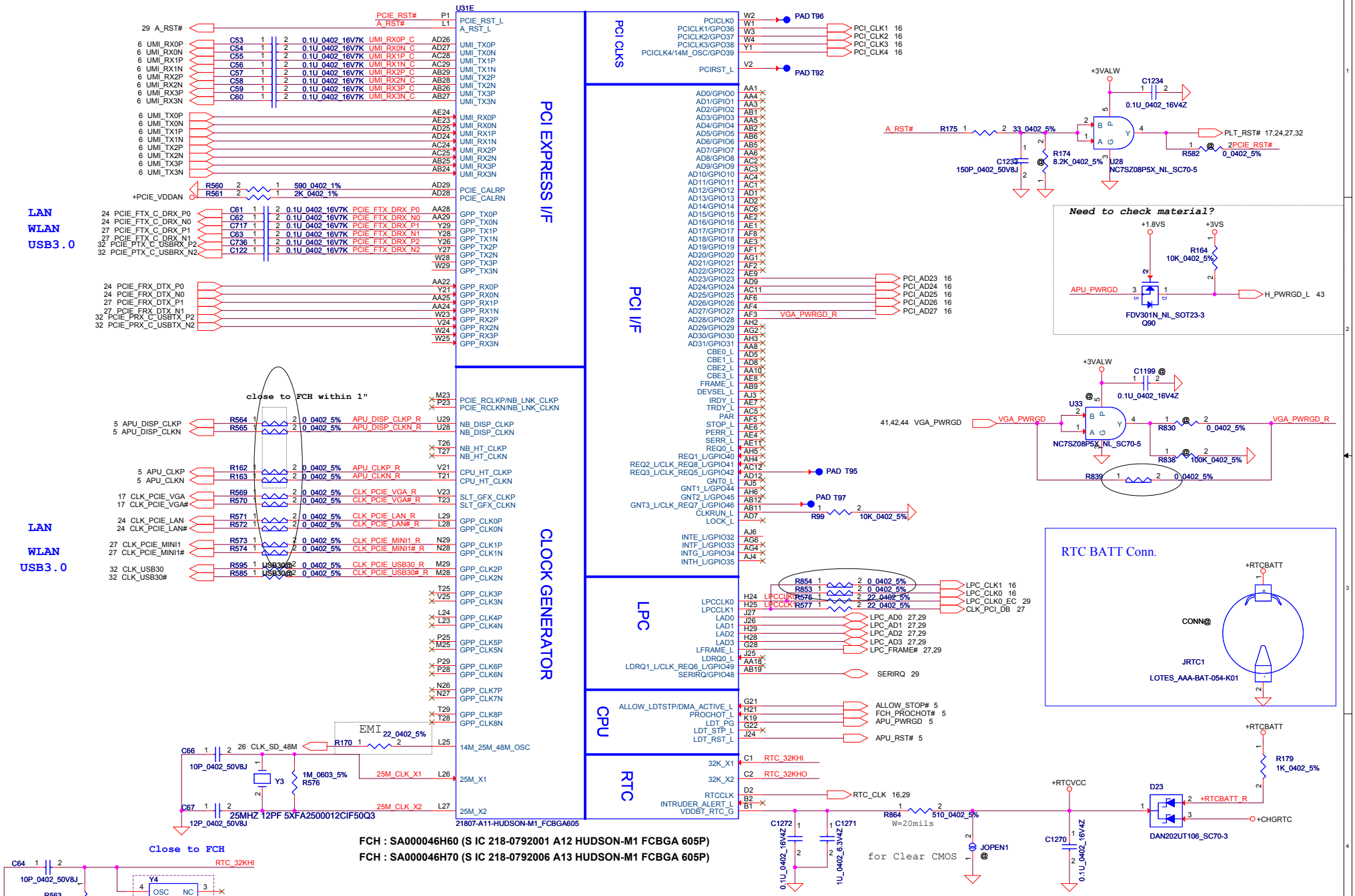

FCH : SA000046H60 (S IC 218-0792001 A12 HUDSON-M1 FCBGA 605P)

FCH : SA000046H70 (S IC 218-0792006 A13 HUDSON-M1 FCBGA 605P)

Security Classification	Compal Secret Data		
Issued Date	2010/08/20	Deciphered Date	2012/06/30

THIS SHEET OF ENGINEERING DRAWING IS THE PROPRIETARY PROPERTY OF COMPAL ELECTRONICS, INC. AND CONTAINS CONFIDENTIAL AND TRADE SECRET INFORMATION. THIS SHEET MAY NOT BE TRANSFERED FROM THE CUSTODY OF THE COMPETENT DIVISION OF R&D DEPARTMENT EXCEPT AS AUTHORIZED BY COMPAL ELECTRONICS, INC. NEITHER THIS SHEET NOR THE INFORMATION IT CONTAINS MAY BE USED BY OR DISCLOSED TO ANY THIRD PARTY WITHOUT PRIOR WRITTEN CONSENT OF COMPAL ELECTRONICS, INC.

Compal Electronics, Inc.

Title: P12-FCH PCIE/PCI/ACPI/LPC/RTC

Size: Custom | Document Number: LA7323P | Rev: 0.22

Date: Friday, March 04, 2011 | Sheet 12 of 47

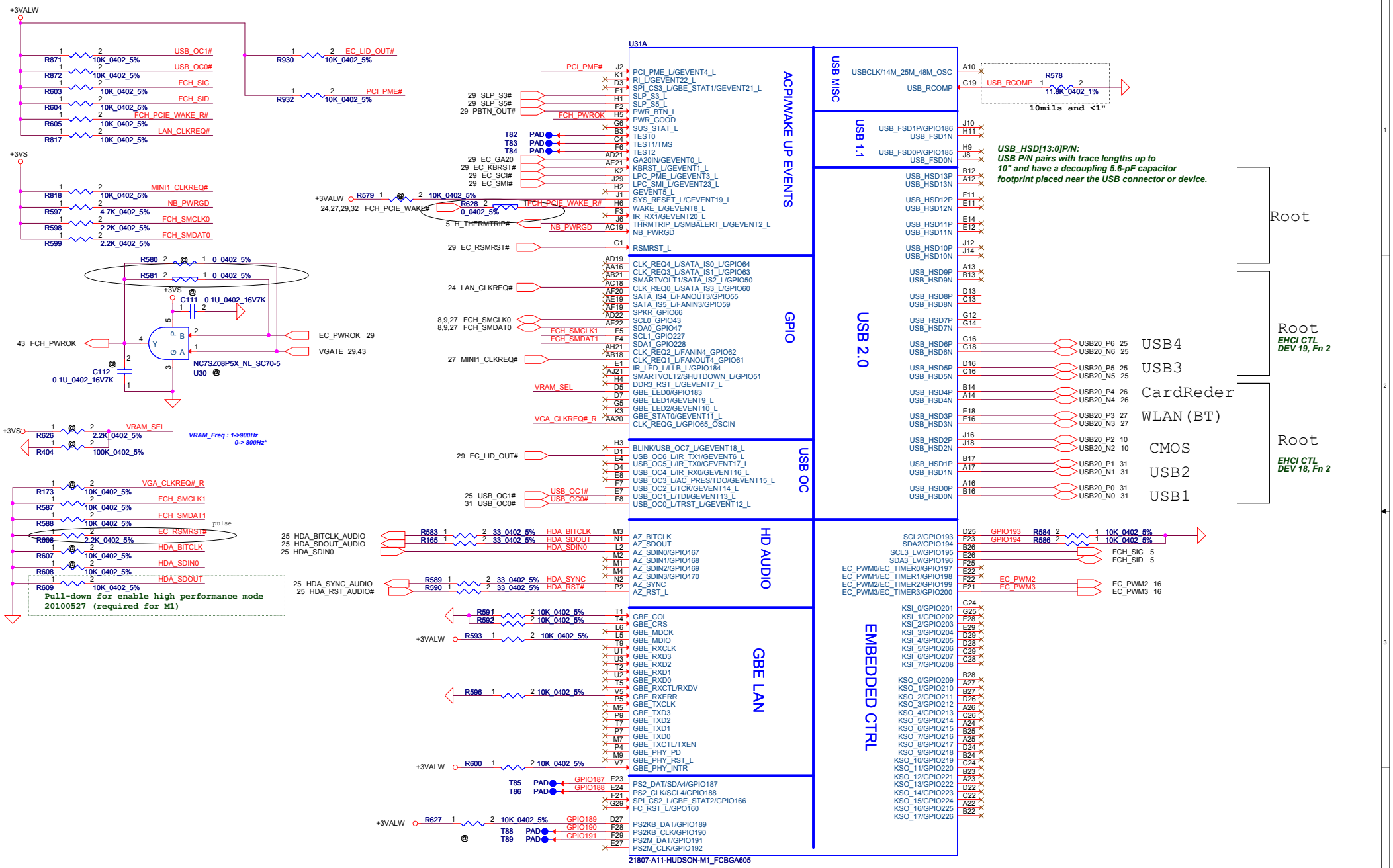

Security Classification	Compal Secret Data			Compal Electronics, Inc.
Issued Date	2010/08/20	Deciphered Date	2012/06/30	Title: P13-FCH HDA/USB/ACPI
				Size: Custom; Document Number: LA7323P; Rev: 0.22
				Date: Friday, March 04, 2011; Sheet 13 of 47

THIS SHEET OF ENGINEERING DRAWING IS THE PROPRIETARY PROPERTY OF COMPAL ELECTRONICS, INC. AND CONTAINS CONFIDENTIAL AND TRADE SECRET INFORMATION. THIS SHEET MAY NOT BE TRANSFERED FROM THE CUSTODY OF THE COMPETENT DIVISION OF R&D DEPARTMENT EXCEPT AS AUTHORIZED BY COMPAL ELECTRONICS, INC. NEITHER THIS SHEET NOR THE INFORMATION IT CONTAINS MAY BE USED BY OR DISCLOSED TO ANY THIRD PARTY WITHOUT PRIOR WRITTEN CONSENT OF COMPAL ELECTRONICS, INC.

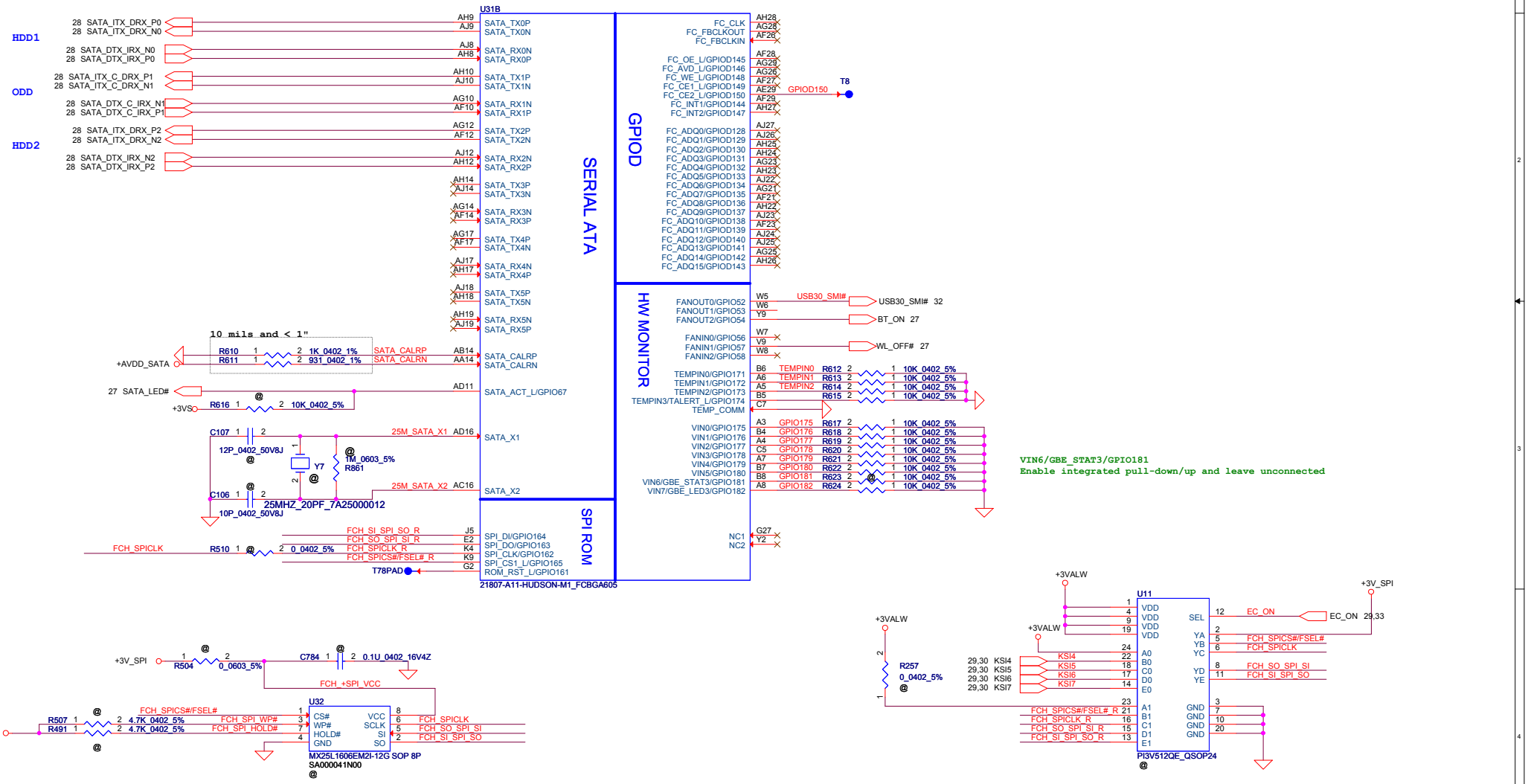

Security Classification	Compal Secret Data		
Issued Date	2010/08/20	Deciphered Date	2012/06/30

THIS SHEET OF ENGINEERING DRAWING IS THE PROPRIETARY PROPERTY OF COMPAL ELECTRONICS, INC. AND CONTAINS CONFIDENTIAL AND TRADE SECRET INFORMATION. THIS SHEET MAY NOT BE TRANSFERED FROM THE CUSTODY OF THE COMPETENT DIVISION OF R&D DEPARTMENT EXCEPT AS AUTHORIZED BY COMPAL ELECTRONICS, INC. NEITHER THIS SHEET NOR THE INFORMATION IT CONTAINS MAY BE USED BY OR DISCLOSED TO ANY THIRD PARTY WITHOUT PRIOR WRITTEN CONSENT OF COMPAL ELECTRONICS, INC.

Compal Electronics, Inc.

Title: P14-FCH-SATA/SPI

Size: Custom | Document Number: LA7323P | Rev: 0.22

Date: Friday, March 04, 2011 | Sheet 14 of 47

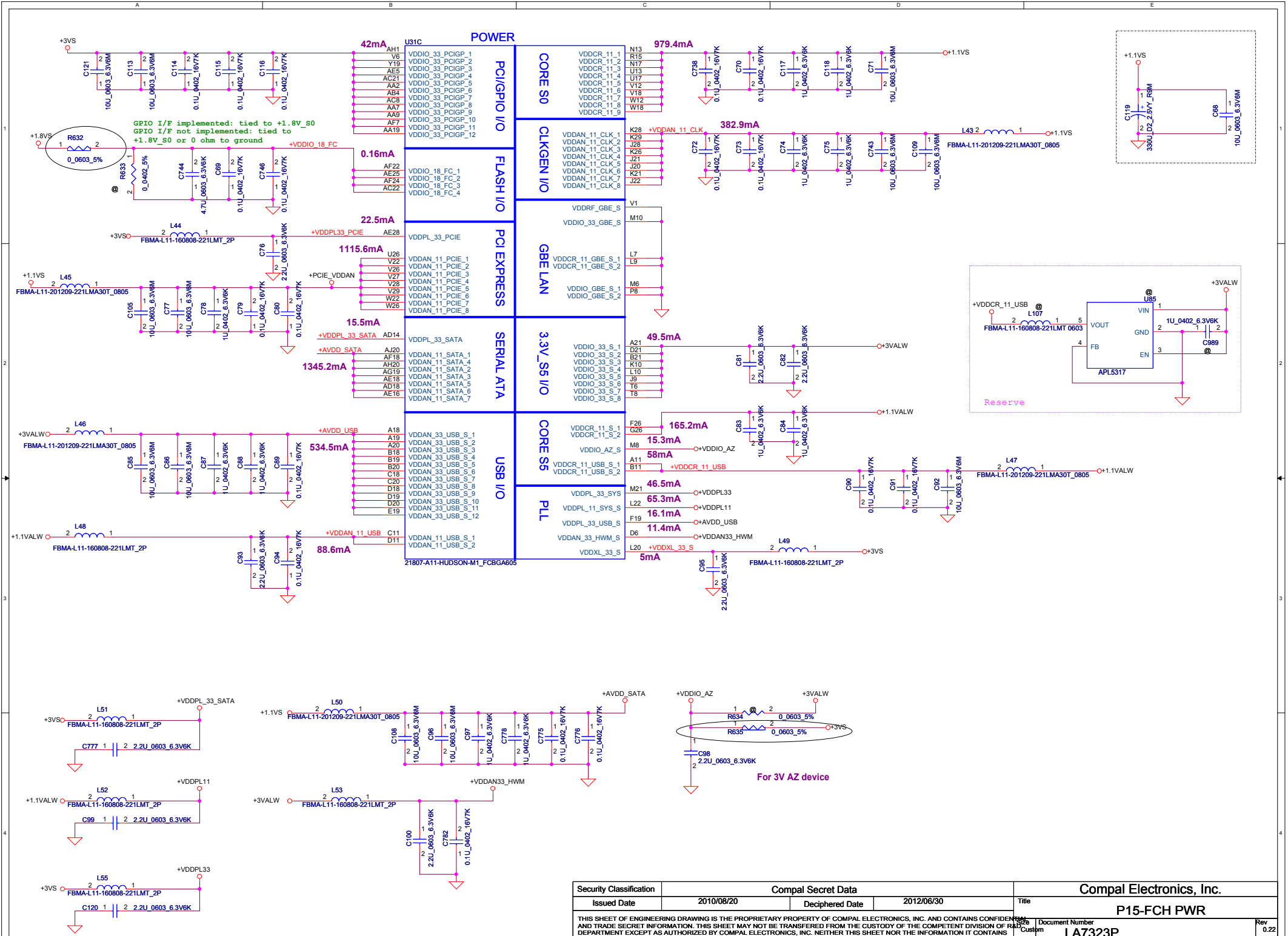

Security Classification	Compal Secret Data			Compal Electronics, Inc.
Issued Date	2010/08/20	Deciphered Date	2012/06/30	Title: P15-FCH PWR

THIS SHEET OF ENGINEERING DRAWING IS THE PROPRIETARY PROPERTY OF COMPAL ELECTRONICS, INC. AND CONTAINS CONFIDENTIAL AND TRADE SECRET INFORMATION. THIS SHEET MAY NOT BE TRANSFERED FROM THE CUSTODY OF THE COMPETENT DIVISION OF R&D DEPARTMENT EXCEPT AS AUTHORIZED BY COMPAL ELECTRONICS, INC. NEITHER THIS SHEET NOR THE INFORMATION IT CONTAINS MAY BE USED BY OR DISCLOSED TO ANY THIRD PARTY WITHOUT PRIOR WRITTEN CONSENT OF COMPAL ELECTRONICS, INC.

Size	Document Number	Rev
Custom	LA7323P	0.22

Date: Friday, March 04, 2011 Sheet 15 of 47

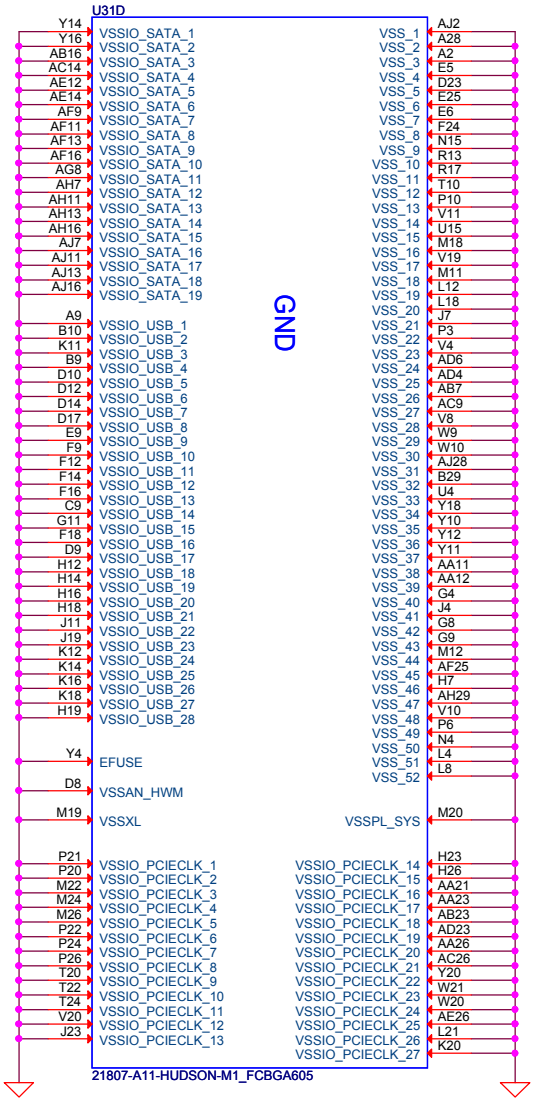

REQUIRED STRAPS

Check Internal PU/PD

	PCI_CLK2	PCI_CLK1	PCI_CLK3	PCI_CLK4	LPC_CLK0	LPC_CLK1	RTC_CLK	EC_PWM2 EC_PWM3
PULL HIGH	WATCHDOG TIMER ENABLE	ALLOW PCIE GEN2 DEFAULT	USE DEBUG STRAP	NON Fusion CLOCK Mode	internal EC ENABLE	Internal CLKGEN Mode DEFAULT	S5 PLUS MODE DISABLED DEFAULT	LPC ROM (H.L) *
PULL LOW	WATCHDOG TIMER DISABLE DEFAULT	FORCE PCIE GEN1	IGNORE DEBUG STRAP DEFAULT	Fusion CLOCK Mode DEFAULT	internal EC DISABLE DEFAULT	External CLKGEN Mode	S5 PLUS MODE ENABLED	SPI ROM(L,H)

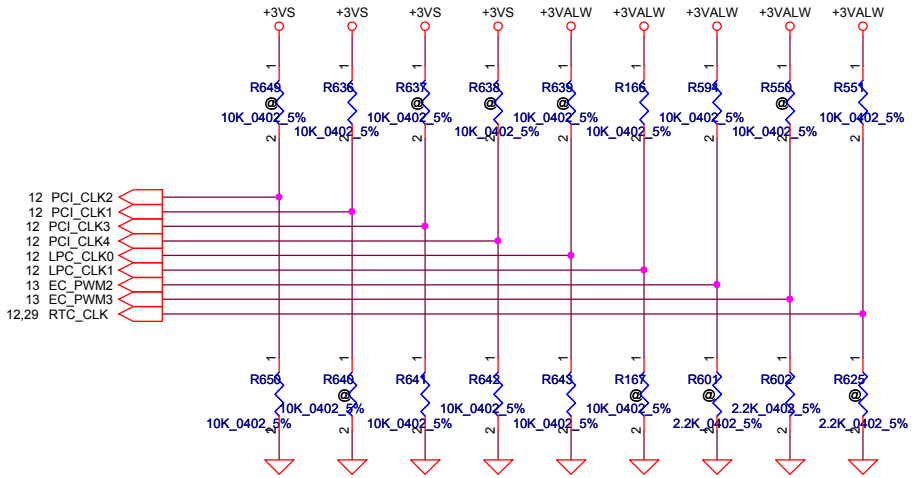

DEBUG STRAPS

FCH M1 HAS 15K INTERNAL PU FOR PCI_AD[27:23]

		PCI_AD27	PCI_AD26	PCI_AD25	PCI_AD24	PCI_AD23 Enable ROM Straps
PULL HIGH		USE internal PLL generated PLL CLK DEFAULT	ILA AUTORUN Disabled DEFAULT	Selects FC PLL DEFAULT	Disable I2C ROM DEFAULT	Required Setting DEFAULT
PULL LOW		BYPASS PCI PLL	ILA AUTORUN Enabled	FC PLL bypassed	Getting Value from I2C EPROM	Reserved

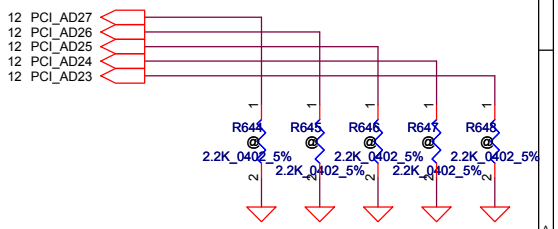

Security Classification	Compal Secret Data		Compal Electronics, Inc.
Issued Date	2010/08/20	Deciphered Date 2012/06/30	Title P16-FCH-VSS/Strap
Size B	Document Number LA7323P		Rev 0.22
Date: Friday, March 04, 2011	Sheet 16 of 47		

THIS SHEET OF ENGINEERING DRAWING IS THE PROPRIETARY PROPERTY OF COMPAL ELECTRONICS, INC. AND CONTAINS CONFIDENTIAL AND TRADE SECRET INFORMATION. THIS SHEET MAY NOT BE TRANSFERED FROM THE CUSTODY OF THE COMPETENT DIVISION OF R&D DEPARTMENT EXCEPT AS AUTHORIZED BY COMPAL ELECTRONICS, INC. NEITHER THIS SHEET NOR THE INFORMATION IT CONTAINS MAY BE USED BY OR DISCLOSED TO ANY THIRD PARTY WITHOUT PRIOR WRITTEN CONSENT OF COMPAL ELECTRONICS, INC.

GFX PCIE LANE REVERSAL

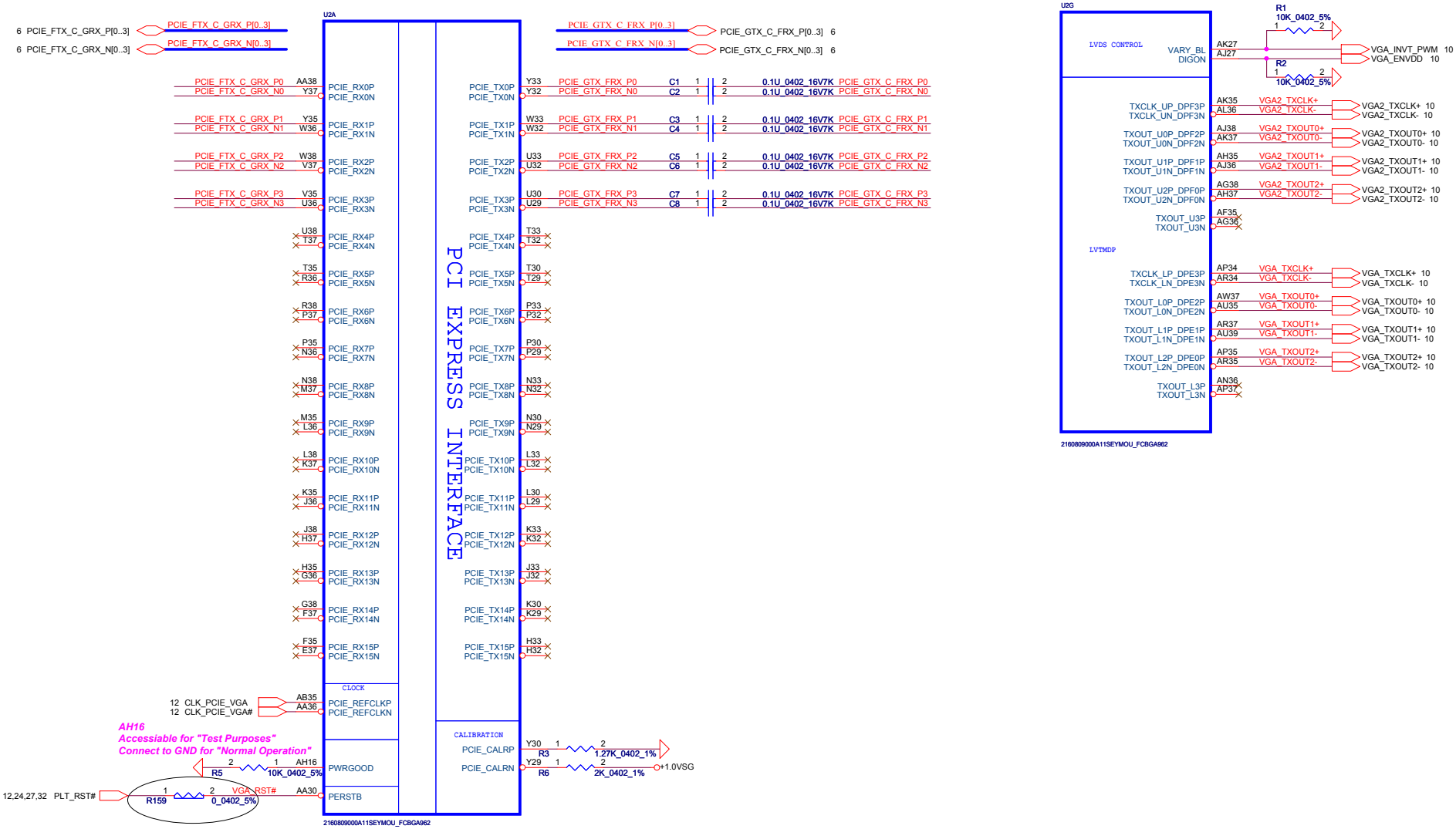

Security Classification	Compal Secret Data			Compal Electronics, Inc.
Issued Date	2010/08/20	Deciphered Date	2012/06/30	Title: P17-Vancouver_ PCIE / LVDS
				Size: Custom; Document Number: LA7323P; Rev: 0.22
				Date: Friday, March 04, 2011; Sheet 17 of 47

THIS SHEET OF ENGINEERING DRAWING IS THE PROPRIETARY PROPERTY OF COMPAL ELECTRONICS, INC. AND CONTAINS CONFIDENTIAL AND TRADE SECRET INFORMATION. THIS SHEET MAY NOT BE TRANSFERED FROM THE CUSTODY OF THE COMPETENT DIVISION OF R&D DEPARTMENT EXCEPT AS AUTHORIZED BY COMPAL ELECTRONICS, INC. NEITHER THIS SHEET NOR THE INFORMATION IT CONTAINS MAY BE USED BY OR DISCLOSED TO ANY THIRD PARTY WITHOUT PRIOR WRITTEN CONSENT OF COMPAL ELECTRONICS, INC.

Strap Name		Pin Straps description <all internal PD>	Setting
VGA_DIS	GPIO9	VGA Disable determines 0: VGA Controller capacity enabled 1: The device will not be recognized as the system´s VGA controller	0
TX_PWRS_ENB	GPIO0	Transmitter Power Saving Enable 0: 50% Tx output swing for mobile mode 1: full Tx output swing (Default setting for Desktop)	1
TX_DEEMPH_EN	GPIO1	PCI Express Transmitter De-emphasis Enable 0: Tx de-emphasis diabled for mobile mode 1: Tx de-emphasis enabled (Defailt setting for desktop)	1
CONFIG[2] CONFIG[1] CONFIG[0]	GPIO13 GPIO12 GPIO11	GPIO13,12,11 (config 2,1,0) : memory apertures a) If BIOS_ROM_EN = 1, then Config[2:0] defines the ROM type. CONFIG[3:0] 128 MB 000 b) If BIOS_ROM_EN = 0, then Config[2:0] defines the primary memory aperture size. 256 MB 001 * 64 MB 010	001
BIOS_ROM_EN	GPIO22	Enable external BIOS ROM device 0: Diable, 1: Enable	0
AUD[1] AUD(0)	HSYNC VSYNC	00: No audio function; 10: Audio for DisplayPort only; 01: Audio for DisplayPort and HDMI if adapter is detected; 11: Audio for both DisplayPort and HDMI	11
BIF_GEN2_EN	GPIO2	0= Advertises the PCI-E device as 2.5 GT/s capable at power-on 1= Advertises the PCI-E device as 5.0 GT/s capable at power-on 5.0 GT/s capability will be controlled by software	1
RESERVED	H2SYNC (GENLK_CLK) GPIO8 GPIO21 GENERICC GPIO5	Internal use only. THIS PAD HAS AN INTERNAL PULL-DOWN AND MUST BE 0 V AT RESET. The pad may be left unconnected	DNI

External VGA Thermal Sensor

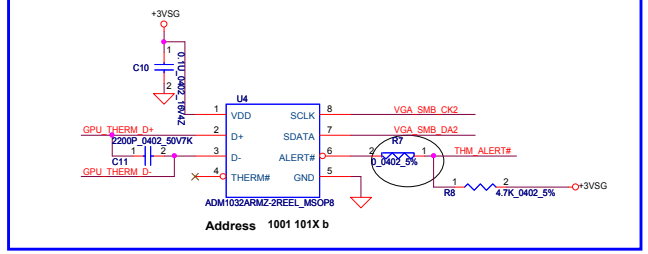

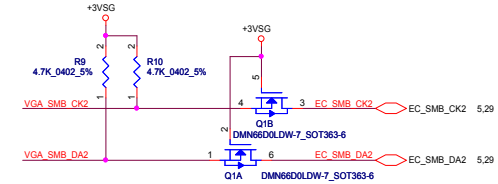

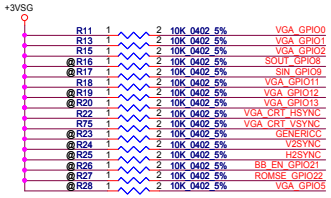

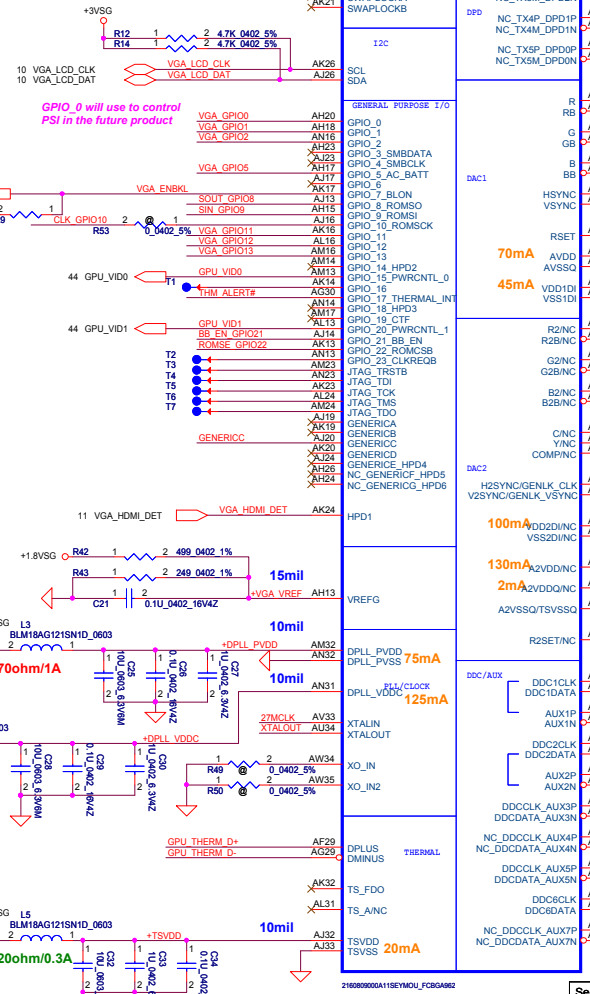

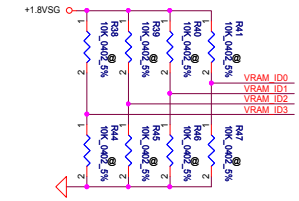

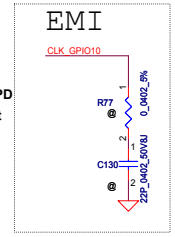

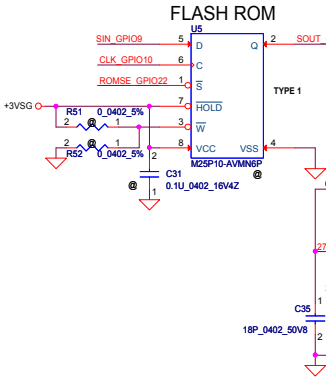

Seymour(XT)				
VRAM \ Location	VRAM_ID3	VRAM_ID2	VRAM_ID1	VRAM_ID0
Samsung SA00004G330 64M16 K4W1G1646G-BC11	0	0	0	0
Samsung SA000047QA0 128M16 K4W2G1646C-HC11	0	0	0	1
Hynix SA00041S60 64M16 H5TQ1G63DFR-11C	0	1	0	0
Hynix SA00003YO30 128M16 H5TQ2G63BFR-11C	0	1	0	1

Security Classification	Compal Secret Data		
Issued Date	2010/08/20	Deciphered Date	2012/06/30

THIS SHEET OF ENGINEERING DRAWING IS THE PROPRIETARY PROPERTY OF COMPAL ELECTRONICS, INC. AND CONTAINS CONFIDENTIAL AND TRADE SECRET INFORMATION. THIS SHEET MAY NOT BE TRANSFERED FROM THE CUSTODY OF THE COMPETENT DIVISION OF R&D DEPARTMENT EXCEPT AS AUTHORIZED BY COMPAL ELECTRONICS, INC. NEITHER THIS SHEET NOR THE INFORMATION IT CONTAINS MAY BE USED BY OR DISCLOSED TO ANY THIRD PARTY WITHOUT PRIOR WRITTEN CONSENT OF COMPAL ELECTRONICS, INC.

Compal Electronics, Inc.

Title: P18-Vancouver_Strape/DP/HDMI//CRT

Size: Custom | Document Number: LA7323P | Rev: 0.22

Date: Friday, March 04, 2011 | Sheet 18 of 47

Robson,Seymour only support single channel memory (channel B only)

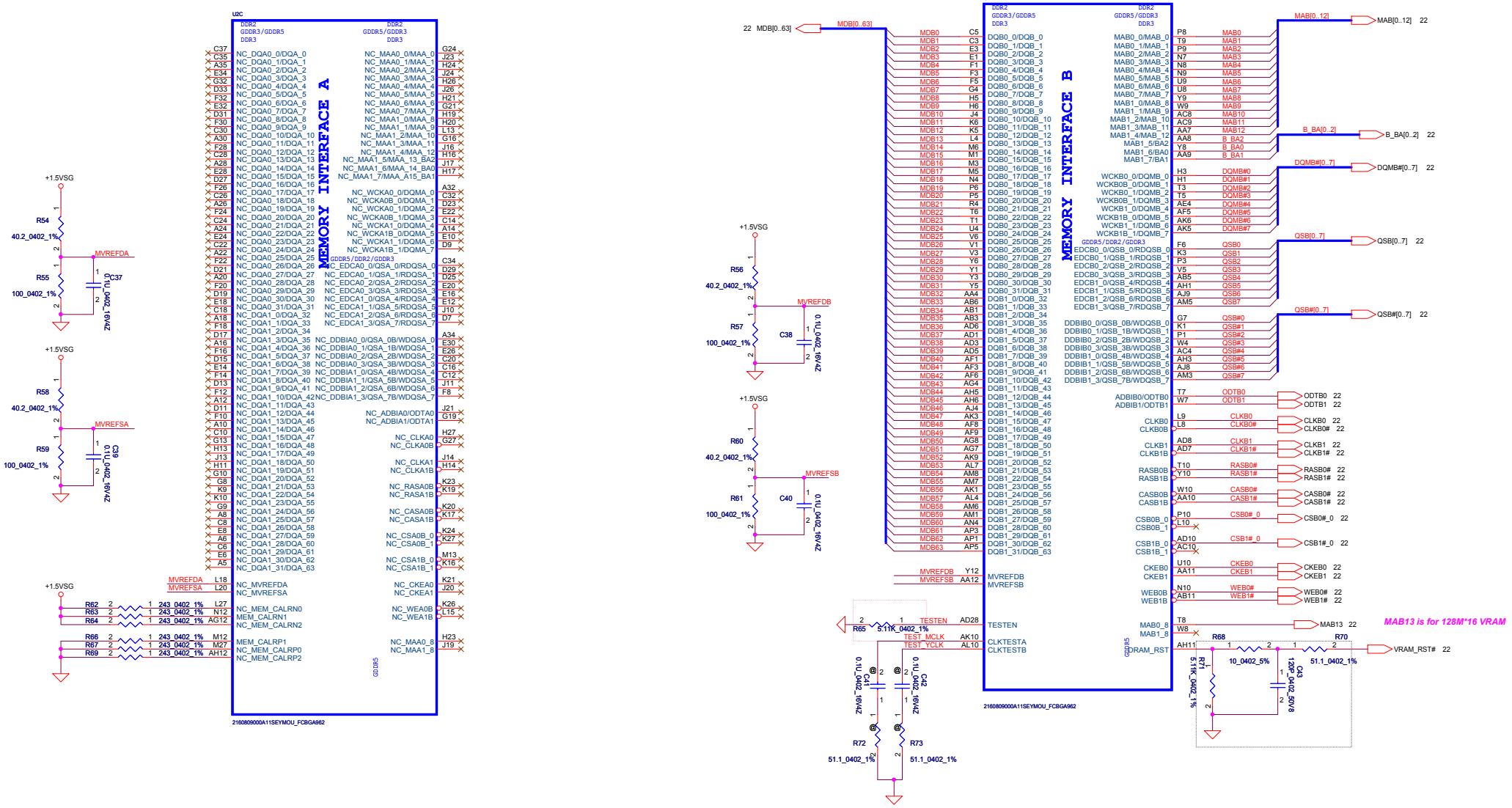

Security Classification	Compal Secret Data		
Issued Date	2010/08/20	Deciphered Date	2012/06/30

THIS SHEET OF ENGINEERING DRAWING IS THE PROPRIETARY PROPERTY OF COMPAL ELECTRONICS, INC. AND CONTAINS CONFIDENTIAL AND TRADE SECRET INFORMATION. THIS SHEET MAY NOT BE TRANSFERED FROM THE CUSTODY OF THE COMPETENT DIVISION OF R&D DEPARTMENT EXCEPT AS AUTHORIZED BY COMPAL ELECTRONICS, INC. NEITHER THIS SHEET NOR THE INFORMATION IT CONTAINS MAY BE USED BY OR DISCLOSED TO ANY THIRD PARTY WITHOUT PRIOR WRITTEN CONSENT OF COMPAL ELECTRONICS, INC.

Compal Electronics, Inc.

Title: P19-Vancouver_Memory

Size: Custom | Document Number: LA7323P | Rev: 0.22

Date: Friday, March 04, 2011 | Sheet 19 of 47

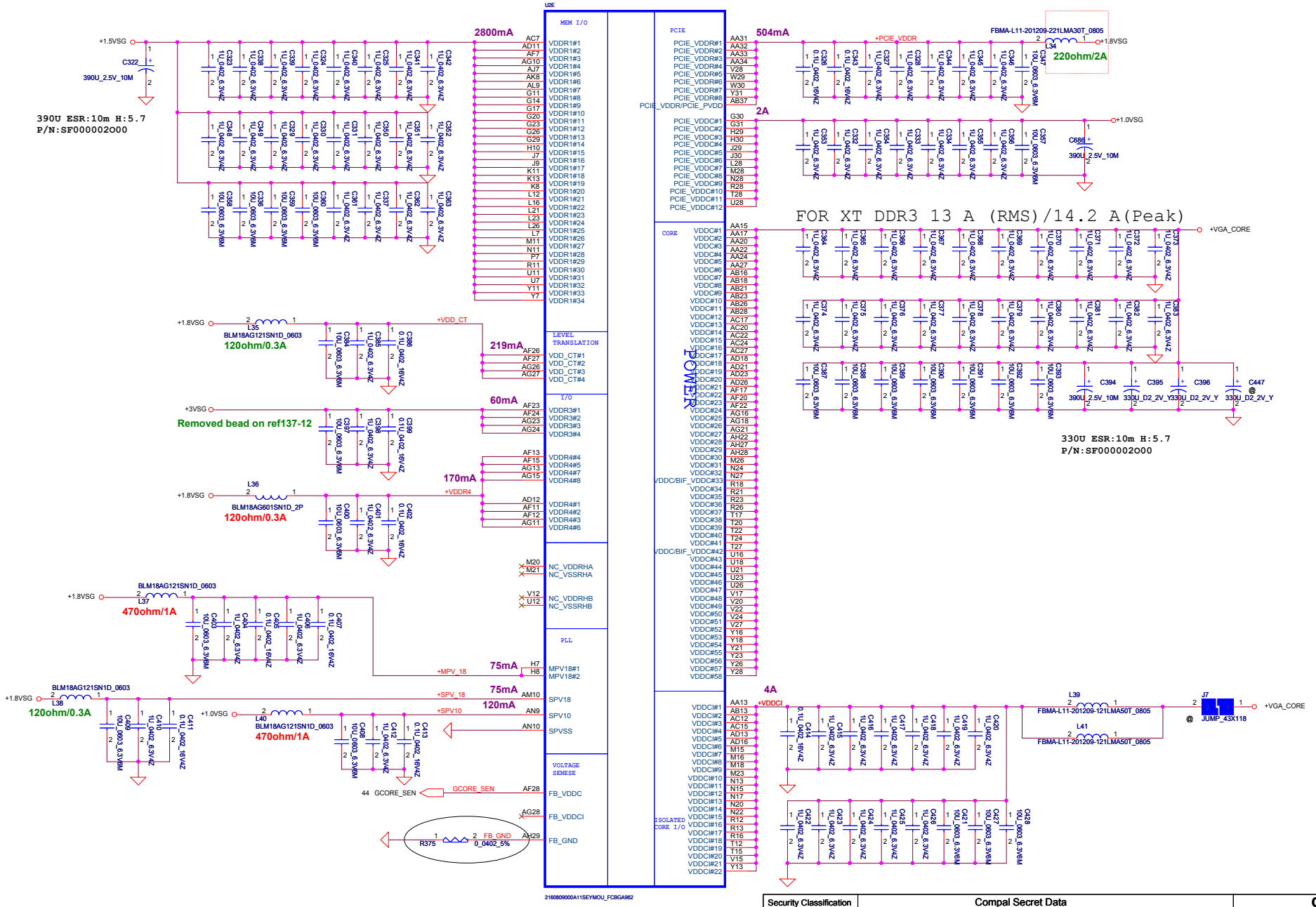

Security Classification	Compal Secret Data		
Issued Date	2010/08/20	Deciphered Date	2012/06/30

THIS SHEET OF ENGINEERING DRAWING IS THE PROPRIETARY PROPERTY OF COMPAL ELECTRONICS, INC. AND CONTAINS CONFIDENTIAL AND TRADE SECRET INFORMATION. THIS SHEET MAY NOT BE TRANSFERED FROM THE CUSTODY OF THE COMPETENT DIVISION OF R&D DEPARTMENT EXCEPT AS AUTHORIZED BY COMPAL ELECTRONICS, INC. NEITHER THIS SHEET NOR THE INFORMATION IT CONTAINS MAY BE USED BY OR DISCLOSED TO ANY THIRD PARTY WITHOUT PRIOR WRITTEN CONSENT OF COMPAL ELECTRONICS, INC.

Compal Electronics, Inc.

Title: P20-Vancouver_Power/GND

Size: Custom | Document Number: LA7323P | Rev: 0.22

Date: Friday, March 04, 2011 | Sheet 20 of 47

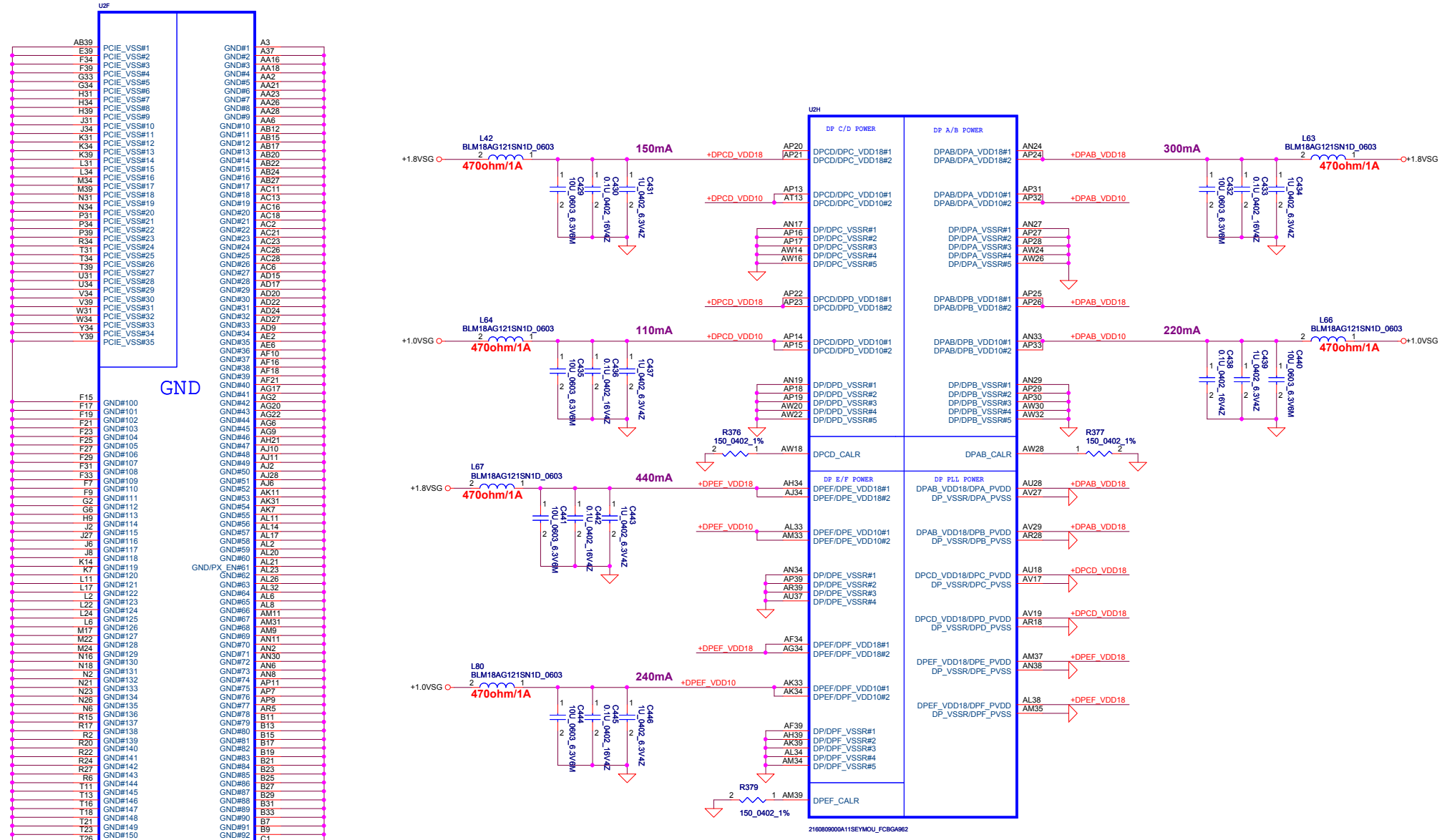

Security Classification	Compal Secret Data			Compal Electronics, Inc.
Issued Date	2010/08/20	Deciphered Date	2012/06/30	Title: P21-Vancouver_Power/GND
				Size: Custom; Document Number: LA7323P; Rev: 0.22
				Date: Friday, March 04, 2011; Sheet 21 of 47

THIS SHEET OF ENGINEERING DRAWING IS THE PROPRIETARY PROPERTY OF COMPAL ELECTRONICS, INC. AND CONTAINS CONFIDENTIAL AND TRADE SECRET INFORMATION. THIS SHEET MAY NOT BE TRANSFERED FROM THE CUSTODY OF THE COMPETENT DIVISION OF R&D DEPARTMENT EXCEPT AS AUTHORIZED BY COMPAL ELECTRONICS, INC. NEITHER THIS SHEET NOR THE INFORMATION IT CONTAINS MAY BE USED BY OR DISCLOSED TO ANY THIRD PARTY WITHOUT PRIOR WRITTEN CONSENT OF COMPAL ELECTRONICS, INC.

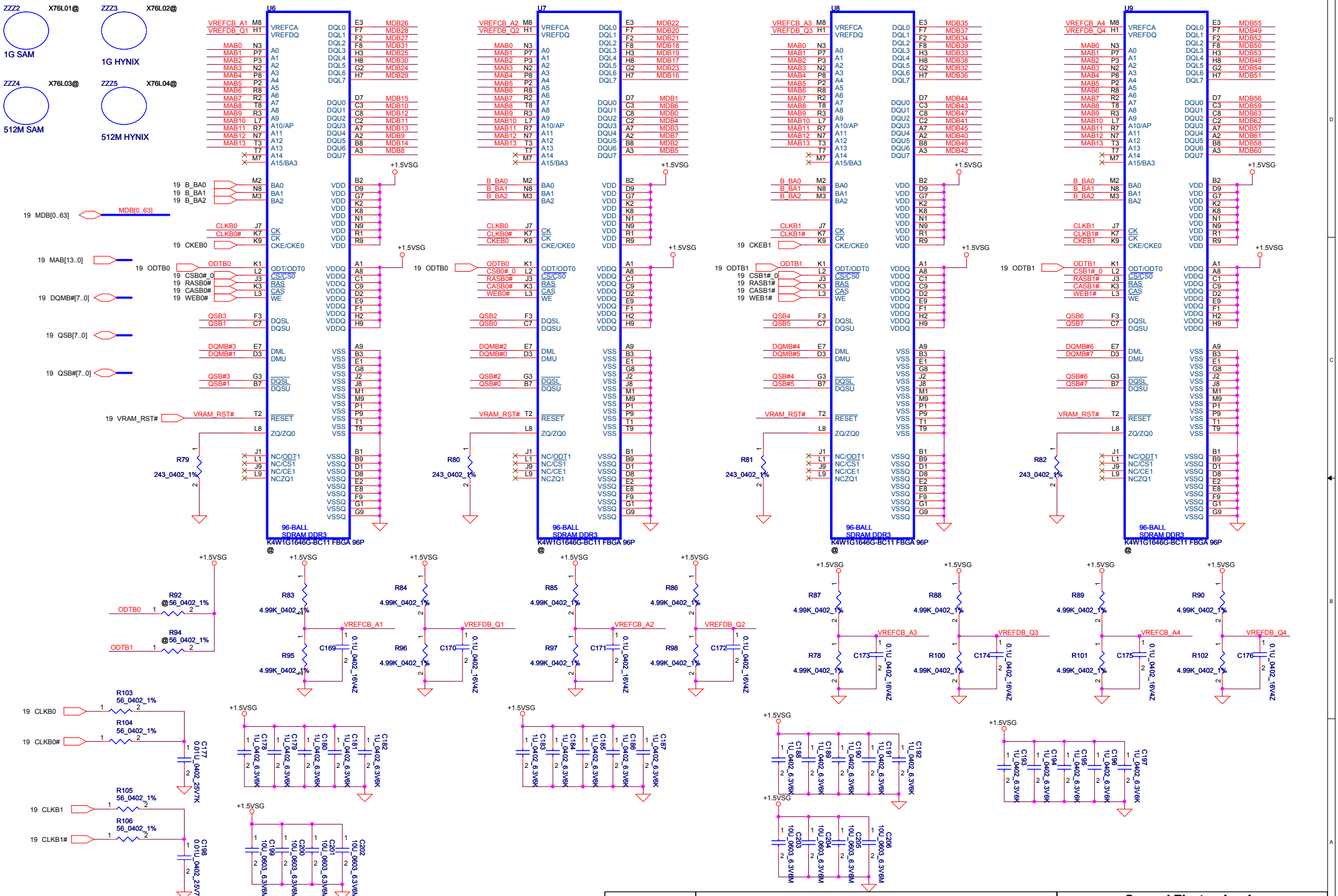

Security Classification	Compal Secret Data			Compal Electronics, Inc.
Issued Date	2010/08/20	Deciphered Date	2012/06/30	Title: P22-VRAM_DDR3 / Channel B

THIS SHEET OF ENGINEERING DRAWING IS THE PROPRIETARY PROPERTY OF COMPAL ELECTRONICS, INC. AND CONTAINS CONFIDENTIAL AND TRADE SECRET INFORMATION. THIS SHEET MAY NOT BE TRANSFERED FROM THE CUSTODY OF THE COMPETENT DIVISION OF R&D DEPARTMENT EXCEPT AS AUTHORIZED BY COMPAL ELECTRONICS, INC. NEITHER THIS SHEET NOR THE INFORMATION IT CONTAINS MAY BE USED BY OR DISCLOSED TO ANY THIRD PARTY WITHOUT PRIOR WRITTEN CONSENT OF COMPAL ELECTRONICS, INC.

Size	Document Number	Rev
Custom	LA7323P	0.22

Date: Friday, March 04, 2011 Sheet 22 of 47

+3.3VS TO +3.3VSG

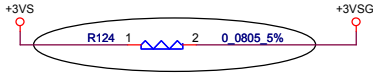

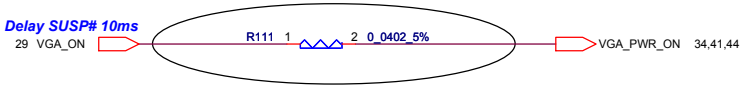

+1.5V TO +1.5VSG

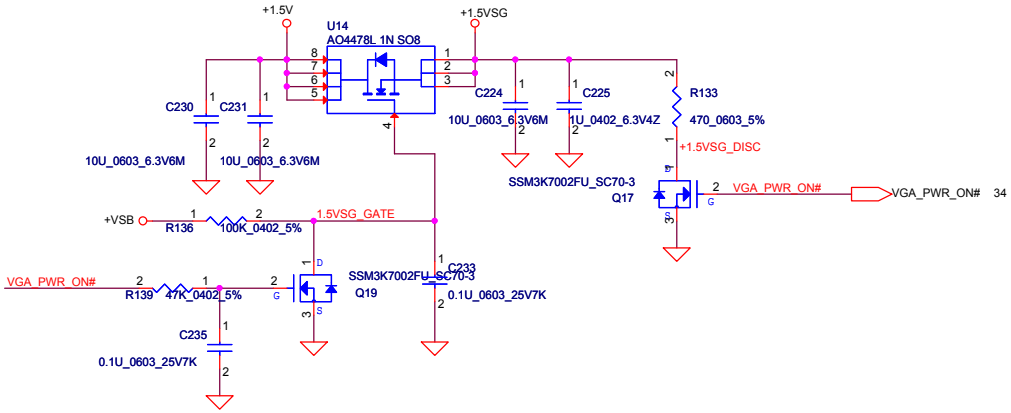

+1.8VS TO +1.8VSG

Change P/N SB00000GV00

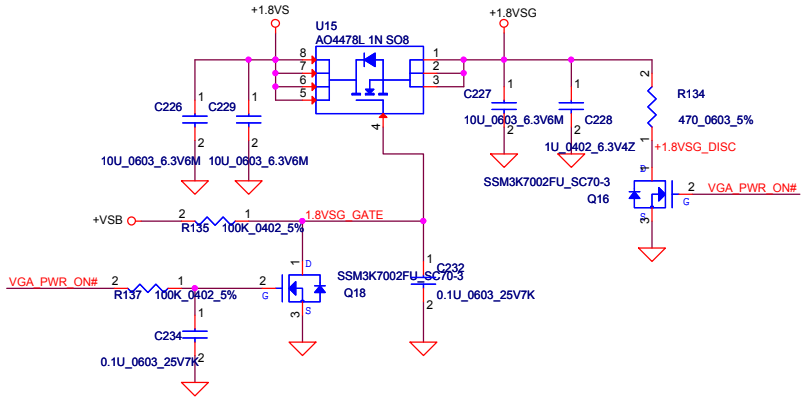

Security Classification	Compal Secret Data		
Issued Date	2010/08/20	Deciphered Date	2012/06/30

THIS SHEET OF ENGINEERING DRAWING IS THE PROPRIETARY PROPERTY OF COMPAL ELECTRONICS, INC. AND CONTAINS CONFIDENTIAL AND TRADE SECRET INFORMATION. THIS SHEET MAY NOT BE TRANSFERED FROM THE CUSTODY OF THE COMPETENT DIVISION OF R&D DEPARTMENT EXCEPT AS AUTHORIZED BY COMPAL ELECTRONICS, INC. NEITHER THIS SHEET NOR THE INFORMATION IT CONTAINS MAY BE USED BY OR DISCLOSED TO ANY THIRD PARTY WITHOUT PRIOR WRITTEN CONSENT OF COMPAL ELECTRONICS, INC.

Compal Electronics, Inc.

Title: P23-VGA DC Interface

Size: Custom | Document Number: LA7323P | Rev: 0.22

Date: Friday, March 04, 2011 | Sheet 23 of 47

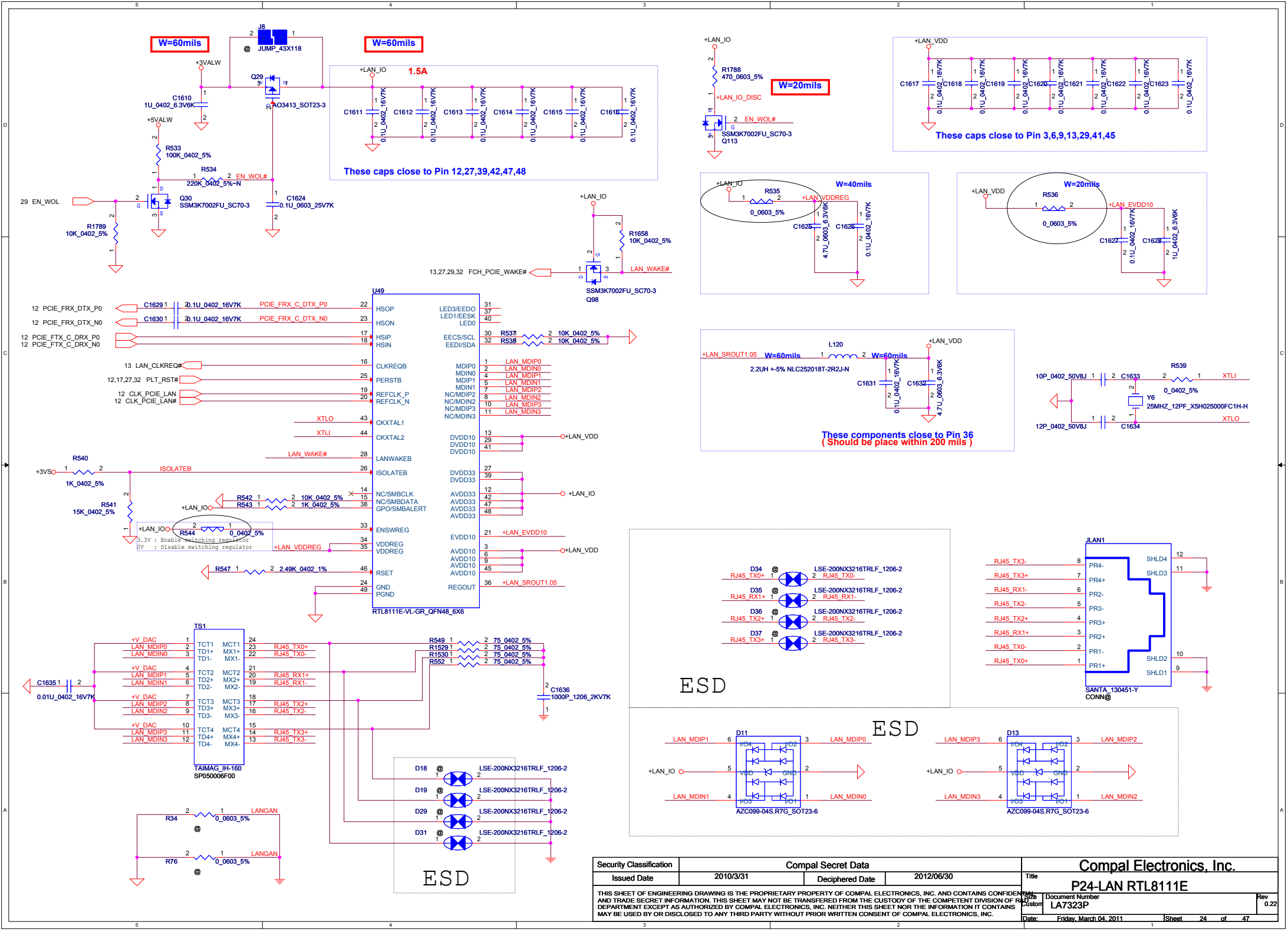

Security Classification	Compal Secret Data		
Issued Date	2010/3/31	Deciphered Date	2012/06/30

THIS SHEET OF ENGINEERING DRAWING IS THE PROPRIETARY PROPERTY OF COMPAL ELECTRONICS, INC. AND CONTAINS CONFIDENTIAL AND TRADE SECRET INFORMATION. THIS SHEET MAY NOT BE TRANSFERED FROM THE CUSTODY OF THE COMPETENT DIVISION OF R&D DEPARTMENT EXCEPT AS AUTHORIZED BY COMPAL ELECTRONICS, INC. NEITHER THIS SHEET NOR THE INFORMATION IT CONTAINS MAY BE USED BY OR DISCLOSED TO ANY THIRD PARTY WITHOUT PRIOR WRITTEN CONSENT OF COMPAL ELECTRONICS, INC.

Compal Electronics, Inc.

Title: P24-LAN RTL8111E

Size: Custom | Document Number: LA7323P | Rev: 0.22

Date: Friday, March 04, 2011 | Sheet 24 of 47

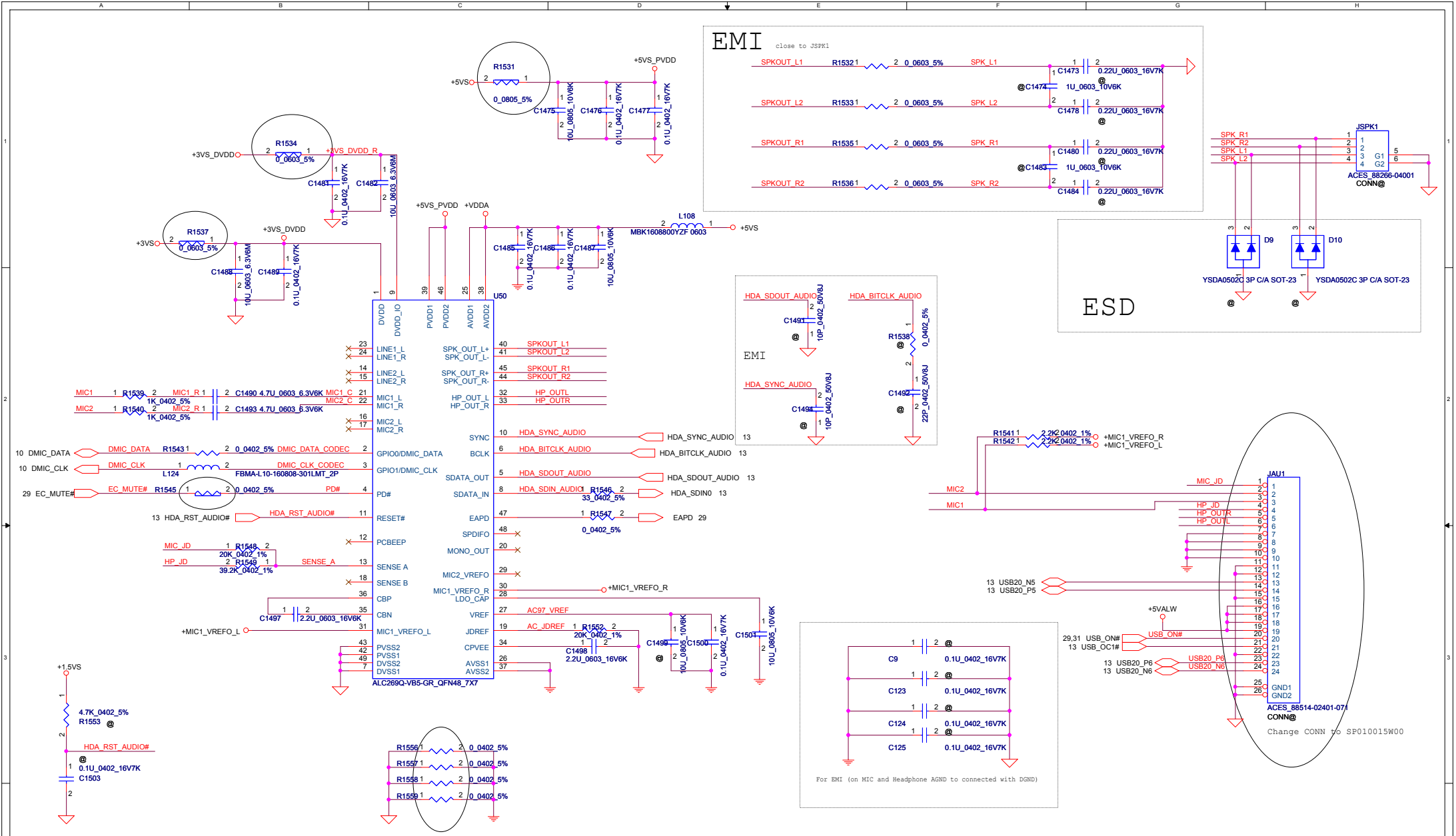

Security Classification	Compal Secret Data		
Issued Date	2010/3/31	Deciphered Date	2012/06/30

THIS SHEET OF ENGINEERING DRAWING IS THE PROPRIETARY PROPERTY OF COMPAL ELECTRONICS, INC. AND CONTAINS CONFIDENTIAL AND TRADE SECRET INFORMATION. THIS SHEET MAY NOT BE TRANSFERED FROM THE CUSTODY OF THE COMPETENT DIVISION OF R&D DEPARTMENT EXCEPT AS AUTHORIZED BY COMPAL ELECTRONICS, INC. NEITHER THIS SHEET NOR THE INFORMATION IT CONTAINS MAY BE USED BY OR DISCLOSED TO ANY THIRD PARTY WITHOUT PRIOR WRITTEN CONSENT OF COMPAL ELECTRONICS, INC.

Compal Electronics, Inc.

Title: P25-HD CODEC ALC259

Size: Custom | Document Number: LA7323P | Rev: 0.22

Date: Friday, March 04, 2011 | Sheet 25 of 47

Card Reader RTS5137
(only SD/MMC/MS function)

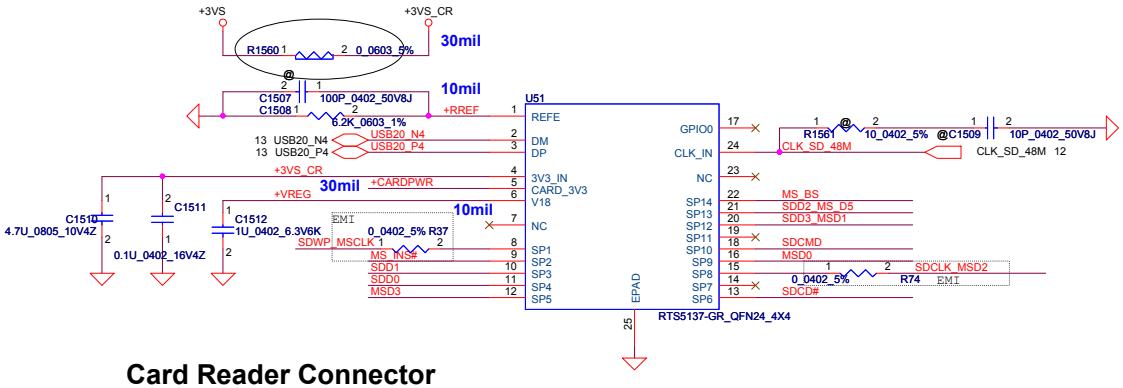

Card Reader Connector

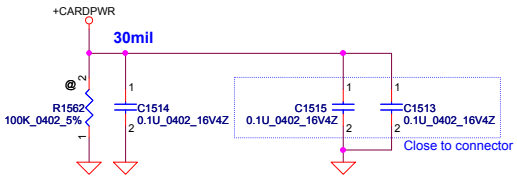

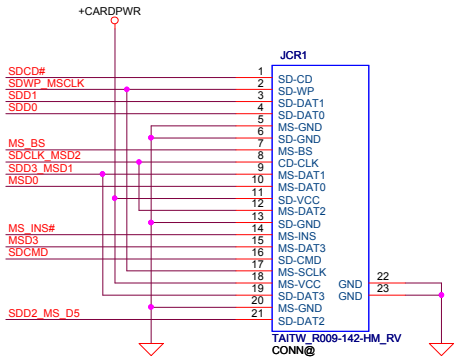

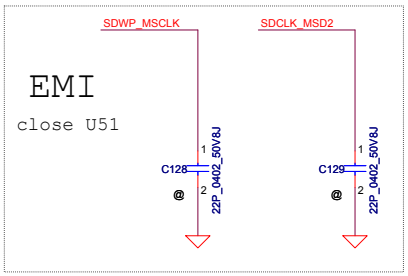

Security Classification	Compal Secret Data			Compal Electronics, Inc.
Issued Date	2009/10/08	Deciphered Date	2012/06/30	Title: P26-RTS5137 Media Card Controller
THIS SHEET OF ENGINEERING DRAWING IS THE PROPRIETARY PROPERTY OF COMPAL ELECTRONICS, INC. AND CONTAINS CONFIDENTIAL AND TRADE SECRET INFORMATION. THIS SHEET MAY NOT BE TRANSFERED FROM THE CUSTODY OF THE COMPETENT DIVISION OF R&D DEPARTMENT EXCEPT AS AUTHORIZED BY COMPAL ELECTRONICS, INC. NEITHER THIS SHEET NOR THE INFORMATION IT CONTAINS MAY BE USED BY OR DISCLOSED TO ANY THIRD PARTY WITHOUT PRIOR WRITTEN CONSENT OF COMPAL ELECTRONICS, INC.				Size: Custom / Document Number: LA7323P / Rev: 0.22
				Date: Friday, March 04, 2011 / Sheet 26 of 47

Mini-Express Card for WLAN/WiMAX(Half)

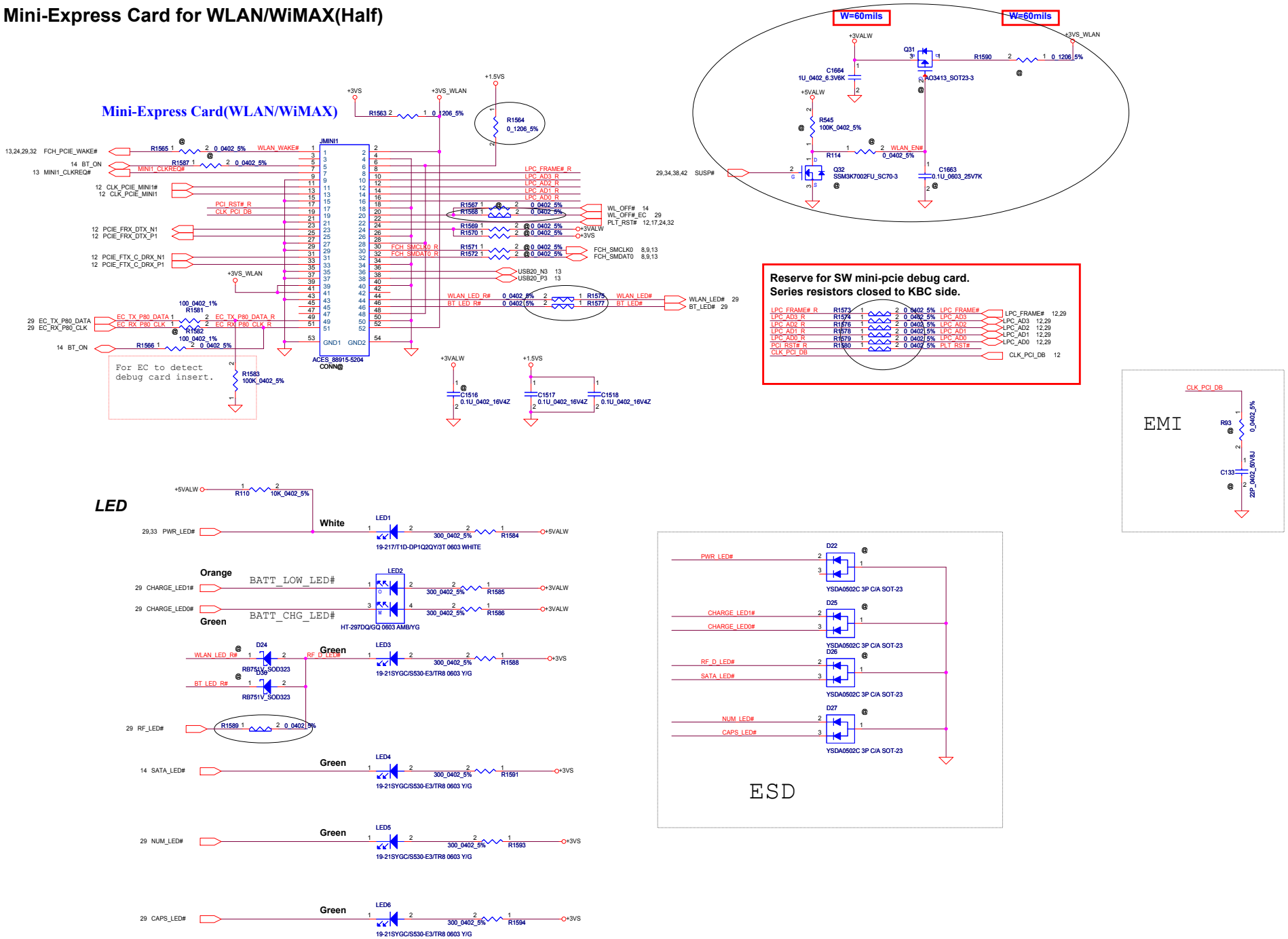

Security Classification	Compal Secret Data		
Issued Date	2010/06/30	Deciphered Date	2012/06/30

THIS SHEET OF ENGINEERING DRAWING IS THE PROPRIETARY PROPERTY OF COMPAL ELECTRONICS, INC. AND CONTAINS CONFIDENTIAL AND TRADE SECRET INFORMATION. THIS SHEET MAY NOT BE TRANSFERRED FROM THE CUSTODY OF THE COMPETENT DIVISION OF R&D DEPARTMENT EXCEPT AS AUTHORIZED BY COMPAL ELECTRONICS, INC. NEITHER THIS SHEET NOR THE INFORMATION IT CONTAINS MAY BE USED BY OR DISCLOSED TO ANY THIRD PARTY WITHOUT PRIOR WRITTEN CONSENT OF COMPAL ELECTRONICS, INC.

Compal Electronics, Inc.

Title: P27-Mini PCIE/LED

Size | Document Number: LA7323P | Rev: 0.22

Date: Friday, March 04, 2011 | Sheet 27 of 47

SATA HDD BTB Conn.

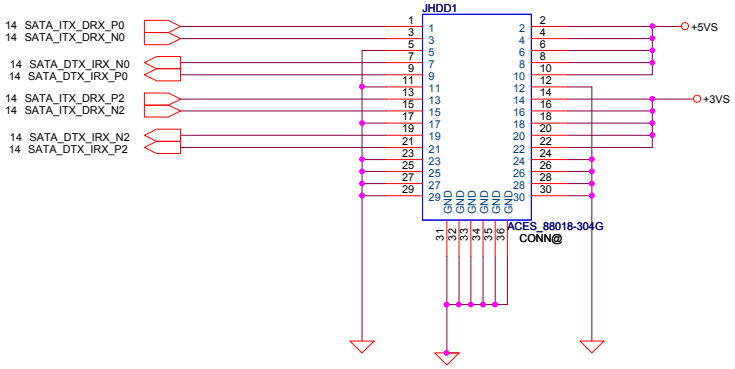

SATA ODD FFC Conn.

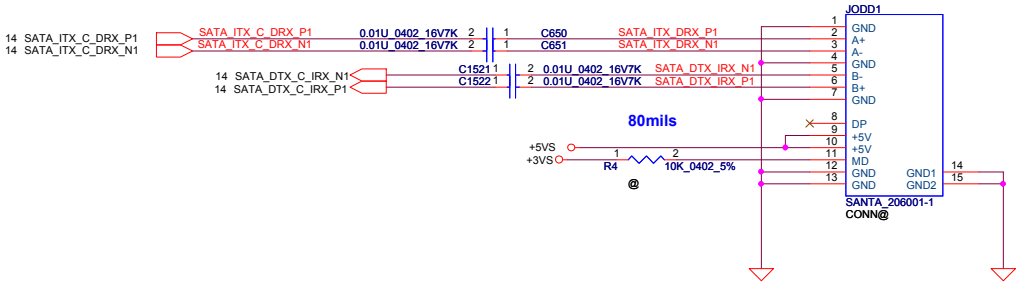

Security Classification	Compal Secret Data			Compal Electronics, Inc.
Issued Date	2010/08/20	Deciphered Date	2012/06/30	Title: P28-HDD & ODD CONN
THIS SHEET OF ENGINEERING DRAWING IS THE PROPRIETARY PROPERTY OF COMPAL ELECTRONICS, INC. AND CONTAINS CONFIDENTIAL AND TRADE SECRET INFORMATION. THIS SHEET MAY NOT BE TRANSFERED FROM THE CUSTODY OF THE COMPETENT DIVISION OF R&D DEPARTMENT EXCEPT AS AUTHORIZED BY COMPAL ELECTRONICS, INC. NEITHER THIS SHEET NOR THE INFORMATION IT CONTAINS MAY BE USED BY OR DISCLOSED TO ANY THIRD PARTY WITHOUT PRIOR WRITTEN CONSENT OF COMPAL ELECTRONICS, INC.				Size: B; Document Number: LA7323P; Rev: 0.22
				Date: Friday, March 04, 2011; Sheet 28 of 47

ID	BRD ID	Ra	Rb	Vab
0	R01 SR	100K	115K	1.6613V
1	R02 ER	100K	154K	1.8857V
2	R10 PR	100K	215K	2.1261V

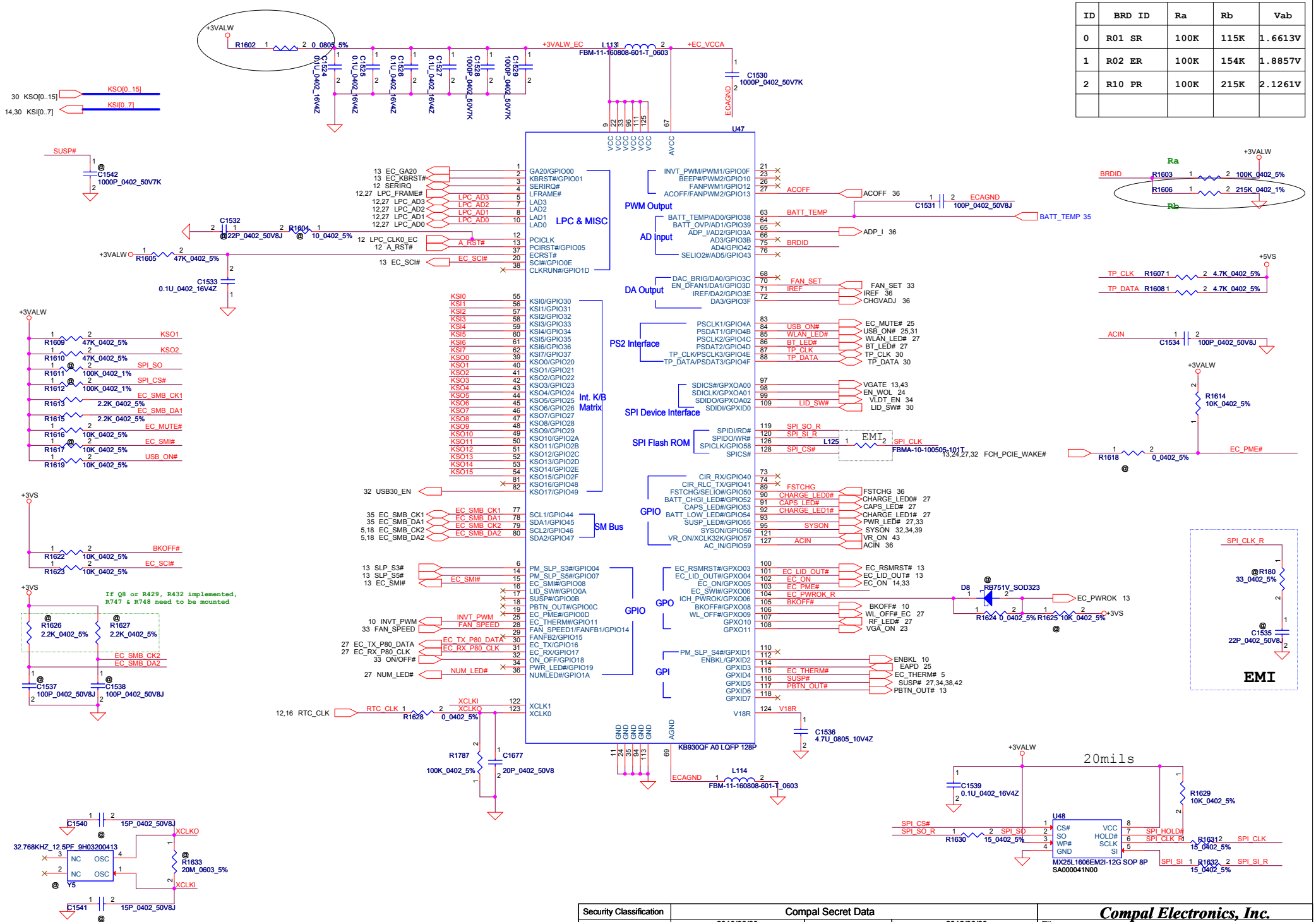

Security Classification	Compal Secret Data		
Issued Date	2010/06/30	Deciphered Date	2012/06/30

THIS SHEET OF ENGINEERING DRAWING IS THE PROPRIETARY PROPERTY OF COMPAL ELECTRONICS, INC. AND CONTAINS CONFIDENTIAL AND TRADE SECRET INFORMATION. THIS SHEET MAY NOT BE TRANSFERRED FROM THE CUSTODY OF THE COMPETENT DIVISION OF R&D DEPARTMENT EXCEPT AS AUTHORIZED BY COMPAL ELECTRONICS, INC. NEITHER THIS SHEET NOR THE INFORMATION IT CONTAINS MAY BE USED BY OR DISCLOSED TO ANY THIRD PARTY WITHOUT PRIOR WRITTEN CONSENT OF COMPAL ELECTRONICS, INC.

Compal Electronics, Inc.

Title: P29-BIOS & EC KB930

Size: Custom | Document Number: LA7323P | Rev: 0.22

Date: Friday, March 04, 2011 | Sheet 29 of 47

INT_KBD Conn.

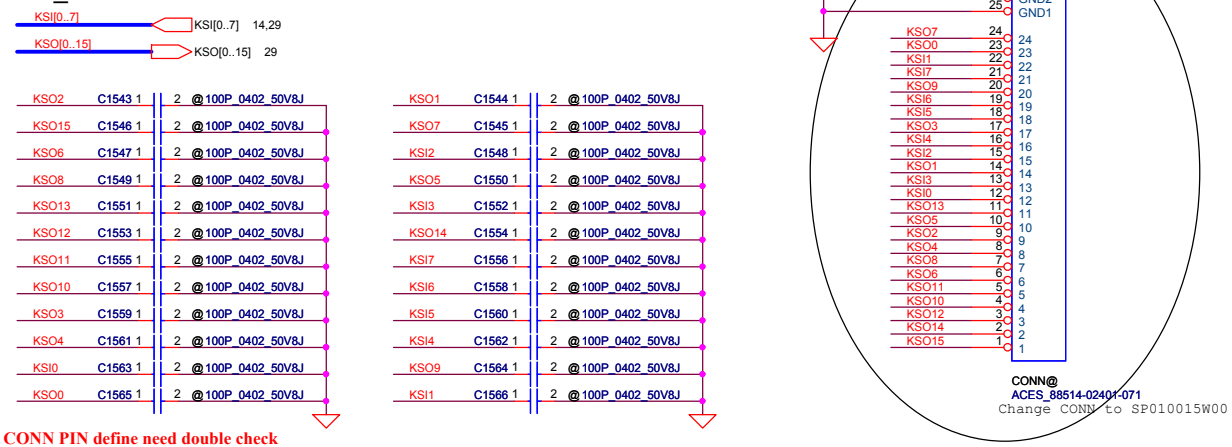

CONN PIN define need double check

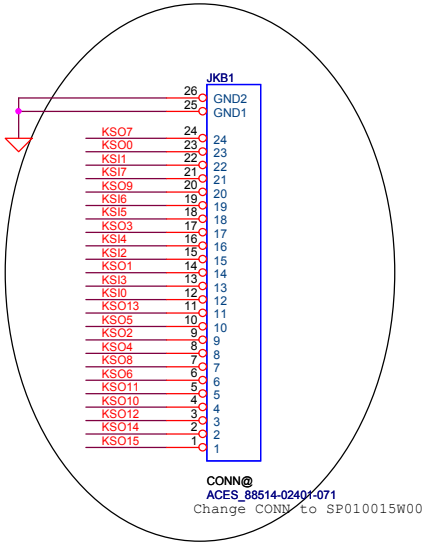

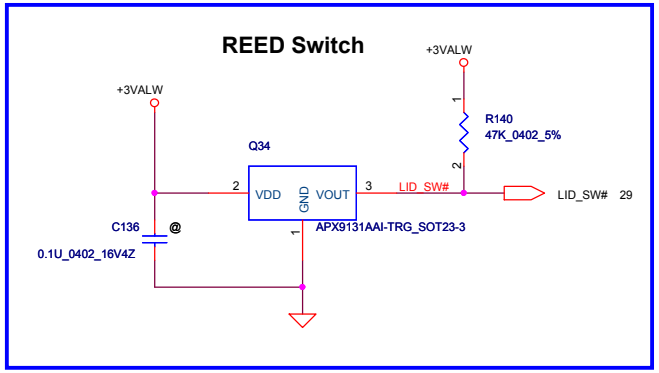

To TP/B Conn.

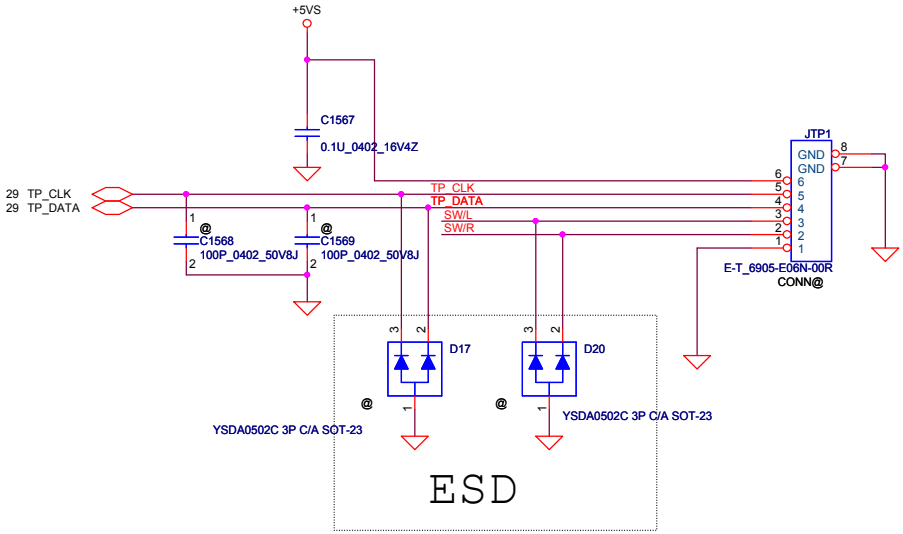

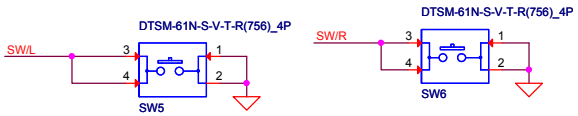

Security Classification	Compal Secret Data		
Issued Date	2010/06/30	Deciphered Date	2012/06/30

THIS SHEET OF ENGINEERING DRAWING IS THE PROPRIETARY PROPERTY OF COMPAL ELECTRONICS, INC. AND CONTAINS CONFIDENTIAL AND TRADE SECRET INFORMATION. THIS SHEET MAY NOT BE TRANSFERED FROM THE CUSTODY OF THE COMPETENT DIVISION OF R&D DEPARTMENT EXCEPT AS AUTHORIZED BY COMPAL ELECTRONICS, INC. NEITHER THIS SHEET NOR THE INFORMATION IT CONTAINS MAY BE USED BY OR DISCLOSED TO ANY THIRD PARTY WITHOUT PRIOR WRITTEN CONSENT OF COMPAL ELECTRONICS, INC.

Compal Electronics, Inc.

Title: P30-KB /SW/TP/Lid

Size: B | Document Number: LA7323P | Rev: 0.22

Date: Friday, March 04, 2011 | Sheet 30 of 47

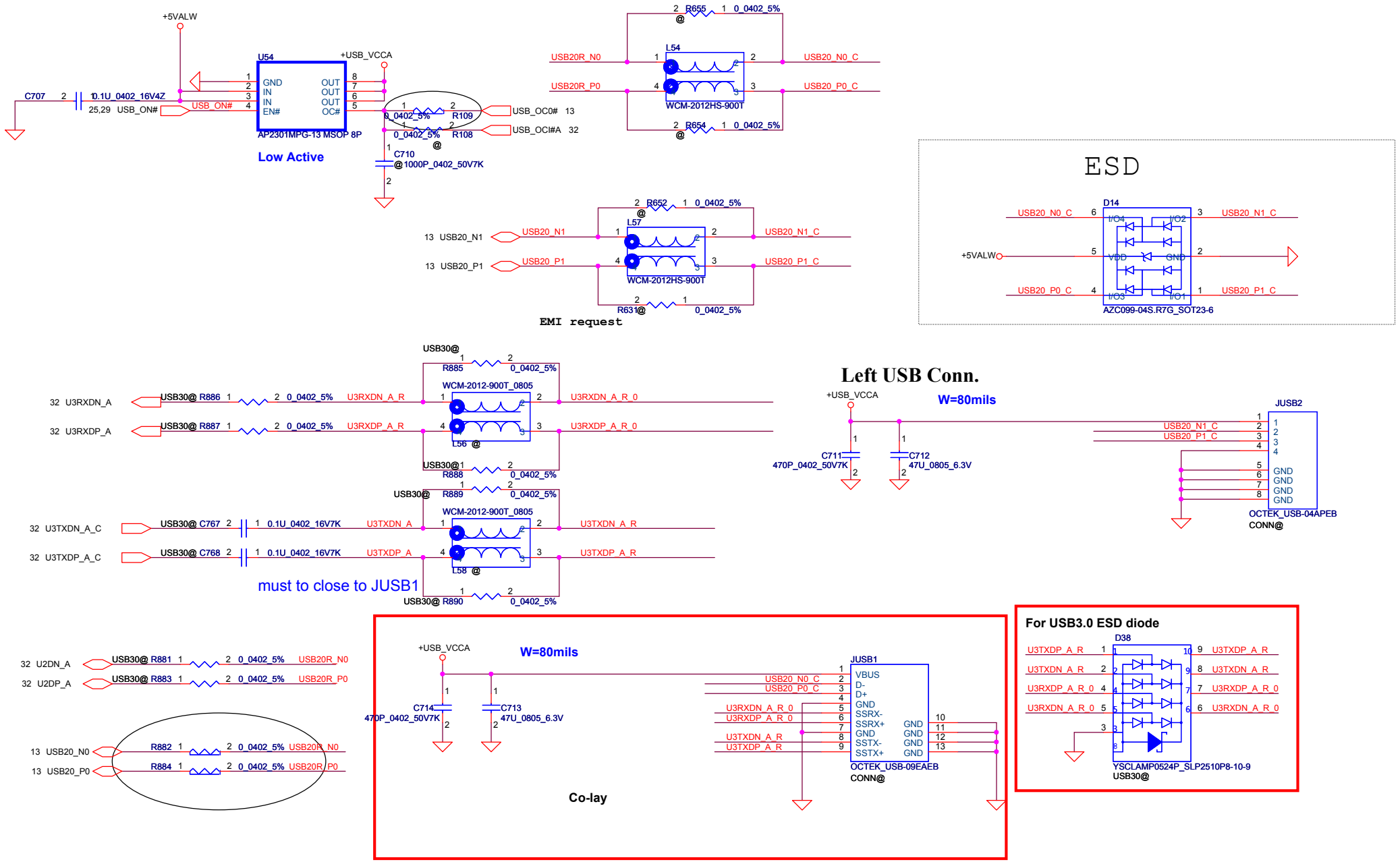

Security Classification	Compal Secret Data		
Issued Date	2010/08/20	Deciphered Date	2012/06/30

THIS SHEET OF ENGINEERING DRAWING IS THE PROPRIETARY PROPERTY OF COMPAL ELECTRONICS, INC. AND CONTAINS CONFIDENTIAL AND TRADE SECRET INFORMATION. THIS SHEET MAY NOT BE TRANSFERED FROM THE CUSTODY OF THE COMPETENT DIVISION OF R&D DEPARTMENT EXCEPT AS AUTHORIZED BY COMPAL ELECTRONICS, INC. NEITHER THIS SHEET NOR THE INFORMATION IT CONTAINS MAY BE USED BY OR DISCLOSED TO ANY THIRD PARTY WITHOUT PRIOR WRITTEN CONSENT OF COMPAL ELECTRONICS, INC.

Compal Electronics, Inc.

Title: P31-USB/BT/USBsub

Size: Custom | Document Number: LA7323P | Rev: 0.22

Date: Friday, March 04, 2011 | Sheet 31 of 47

For WAKE Function

USB_PEPWRDET

	R1719	R1706
S1	Mount	@
S3	@	Mount

USB_PESEL

	R808	R825
Other application	Mount	@
Express Card/Mini Card	@	Mount

Power Sequence

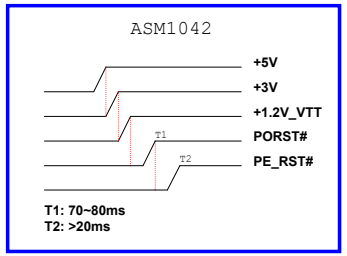

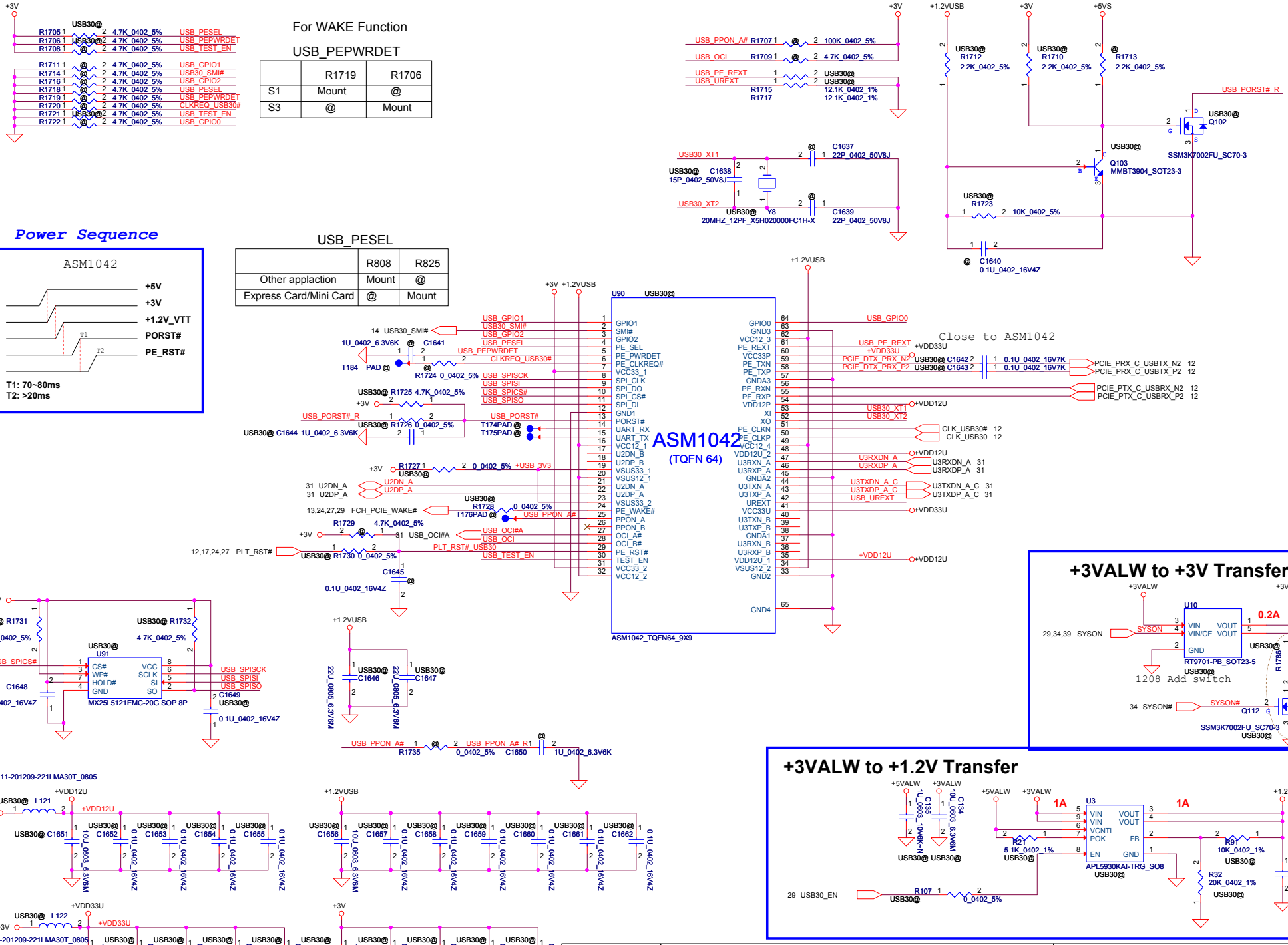

Security Classification	Compal Secret Data		
Issued Date	2010/10/1	Deciphered Date	2012/06/30

THIS SHEET OF ENGINEERING DRAWING IS THE PROPRIETARY PROPERTY OF COMPAL ELECTRONICS, INC. AND CONTAINS CONFIDENTIAL AND TRADE SECRET INFORMATION. THIS SHEET MAY NOT BE TRANSFERED FROM THE CUSTODY OF THE COMPETENT DIVISION OF R&D DEPARTMENT EXCEPT AS AUTHORIZED BY COMPAL ELECTRONICS, INC. NEITHER THIS SHEET NOR THE INFORMATION IT CONTAINS MAY BE USED BY OR DISCLOSED TO ANY THIRD PARTY WITHOUT PRIOR WRITTEN CONSENT OF COMPAL ELECTRONICS, INC.

Compal Electronics, Inc.

Title: P32-USB3.0

Size: Custom | Document Number: LA7323P | Rev: 0.22

Date: Friday, March 04, 2011 | Sheet 32 of 47

ON/OFF switch **Power Button**

For SR

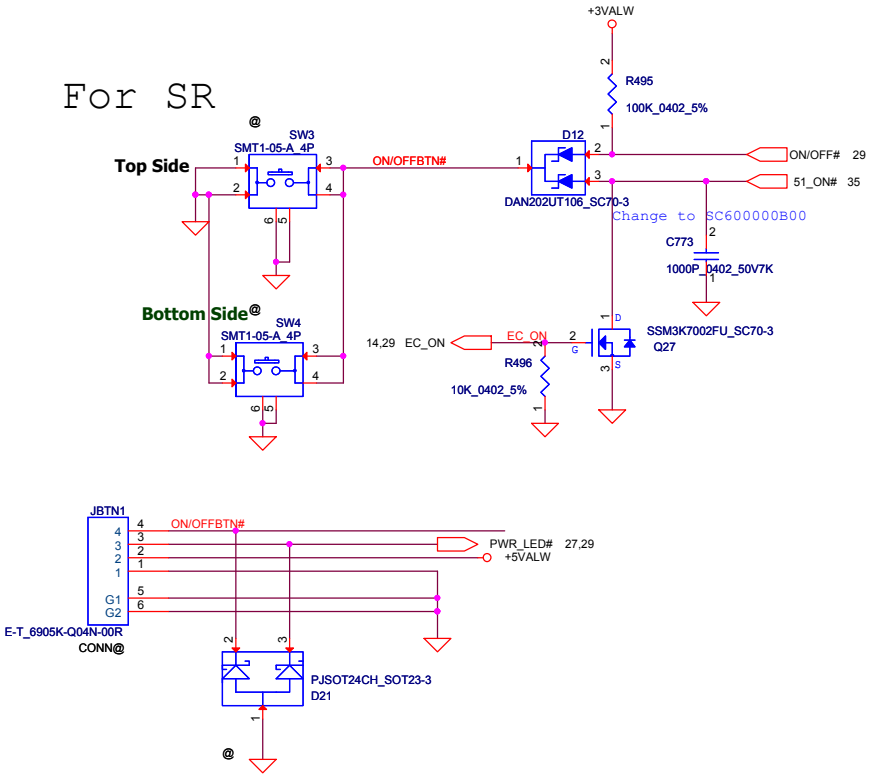

Fan Control Circuit

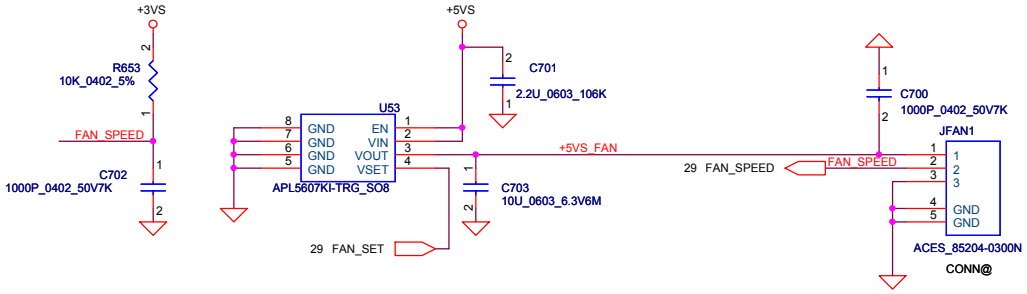

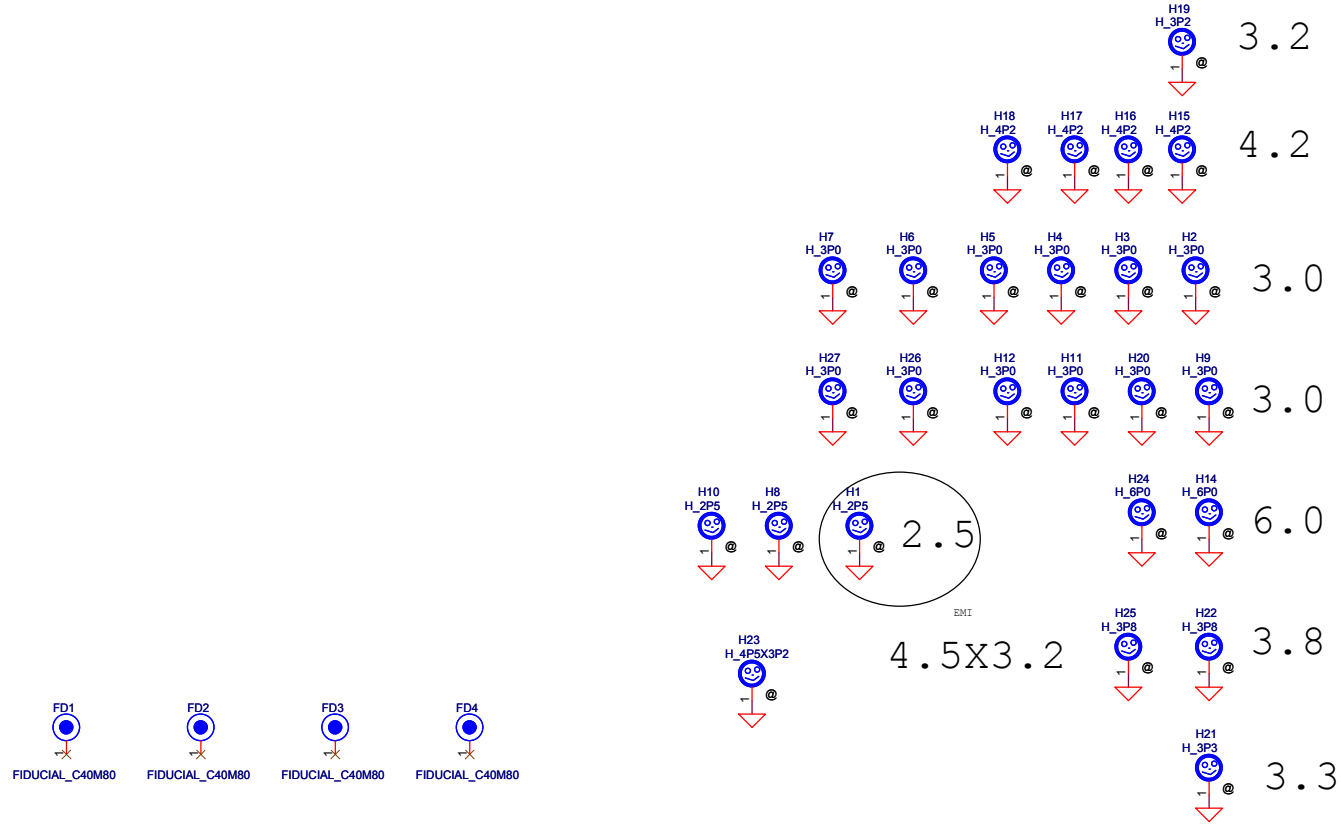

FD1 FD2 FD3 FD4

FIDUCIAL_C40M80 FIDUCIAL_C40M80 FIDUCIAL_C40M80 FIDUCIAL_C40M80

Security Classification	Compal Secret Data		
Issued Date	2010/08/20	Deciphered Date	2012/06/30

THIS SHEET OF ENGINEERING DRAWING IS THE PROPRIETARY PROPERTY OF COMPAL ELECTRONICS, INC. AND CONTAINS CONFIDENTIAL AND TRADE SECRET INFORMATION. THIS SHEET MAY NOT BE TRANSFERED FROM THE CUSTODY OF THE COMPETENT DIVISION OF R&D DEPARTMENT EXCEPT AS AUTHORIZED BY COMPAL ELECTRONICS, INC. NEITHER THIS SHEET NOR THE INFORMATION IT CONTAINS MAY BE USED BY OR DISCLOSED TO ANY THIRD PARTY WITHOUT PRIOR WRITTEN CONSENT OF COMPAL ELECTRONICS, INC.

Compal Electronics, Inc.

Title: P33-Other IO/USB (right)

Size: Custom | Document Number: LA7323P | Rev: 0.22

Date: Friday, March 04, 2011 | Sheet 33 of 47

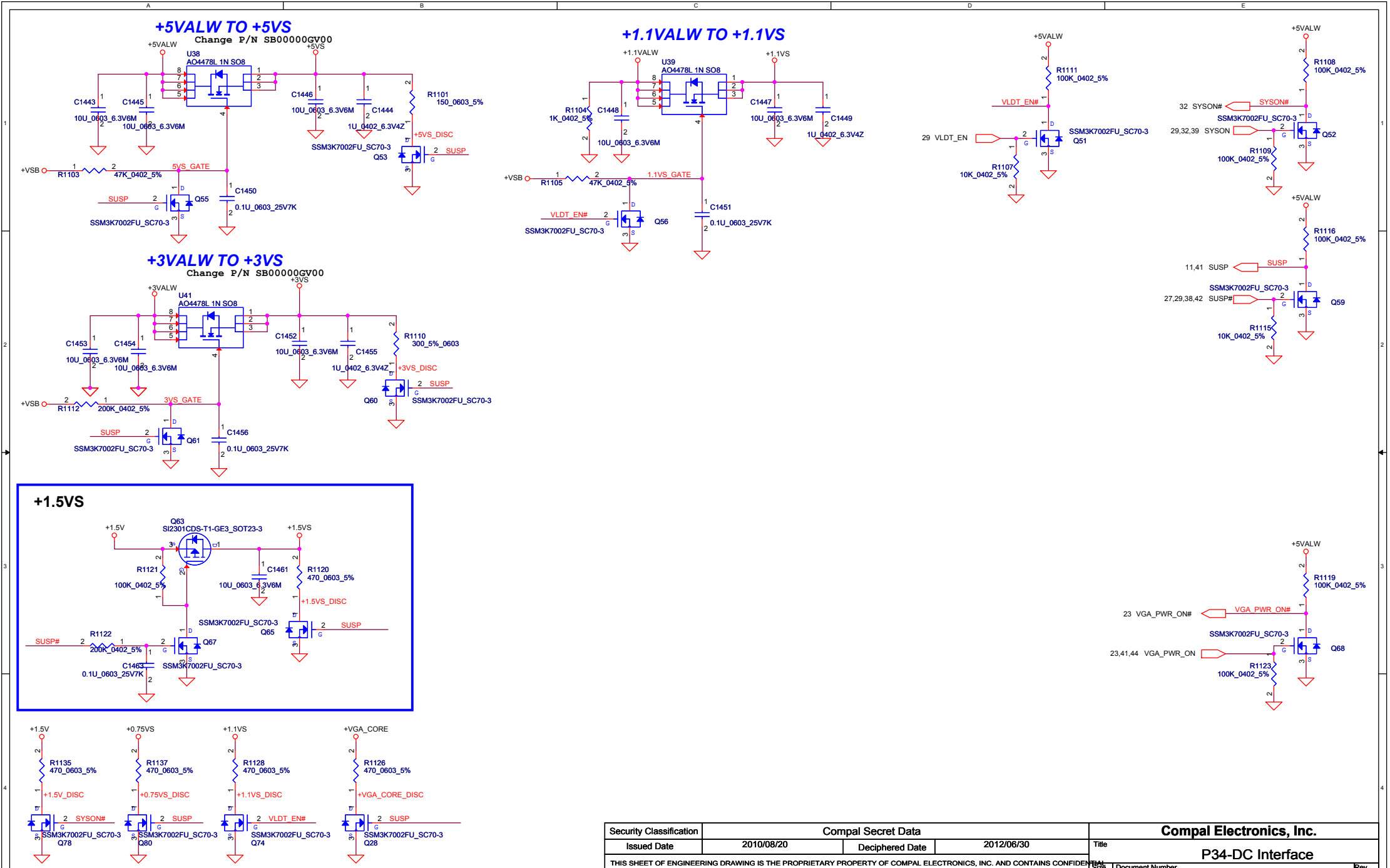

Security Classification	Compal Secret Data			Compal Electronics, Inc.
Issued Date	2010/08/20	Deciphered Date	2012/06/30	Title: P34-DC Interface
				Size: Custom; Document Number: LA7323P; Rev: 0.22
				Date: Friday, March 04, 2011; Sheet 34 of 47

THIS SHEET OF ENGINEERING DRAWING IS THE PROPRIETARY PROPERTY OF COMPAL ELECTRONICS, INC. AND CONTAINS CONFIDENTIAL AND TRADE SECRET INFORMATION. THIS SHEET MAY NOT BE TRANSFERED FROM THE CUSTODY OF THE COMPETENT DIVISION OF R&D DEPARTMENT EXCEPT AS AUTHORIZED BY COMPAL ELECTRONICS, INC. NEITHER THIS SHEET NOR THE INFORMATION IT CONTAINS MAY BE USED BY OR DISCLOSED TO ANY THIRD PARTY WITHOUT PRIOR WRITTEN CONSENT OF COMPAL ELECTRONICS, INC.

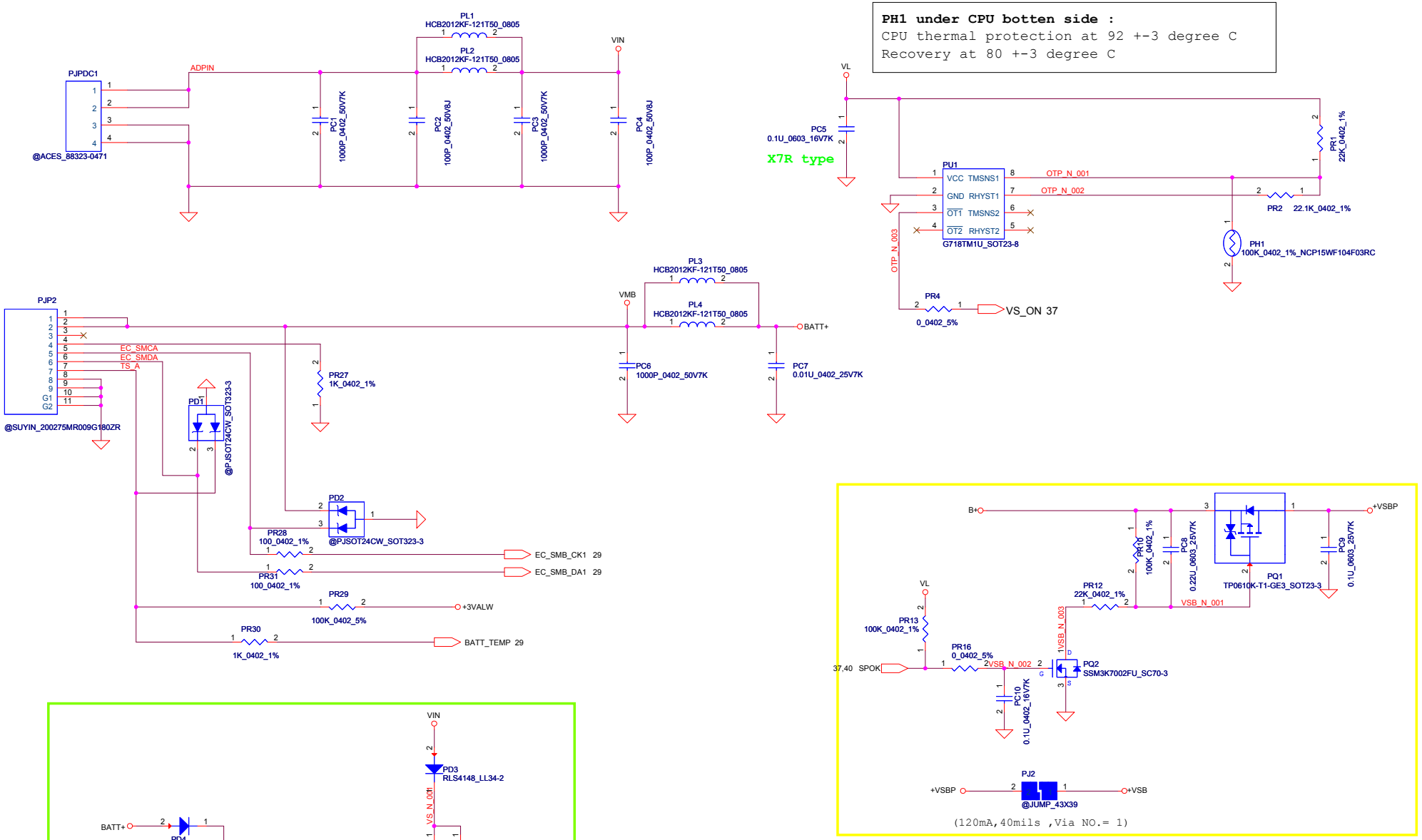

Security Classification	Compal Secret Data		
Issued Date	2009/01/23	Deciphered Date	2010/01/23

THIS SHEET OF ENGINEERING DRAWING IS THE PROPRIETARY PROPERTY OF COMPAL ELECTRONICS, INC. AND CONTAINS CONFIDENTIAL AND TRADE SECRET INFORMATION. THIS SHEET MAY NOT BE TRANSFERED FROM THE CUSTODY OF THE COMPETENT DIVISION OF R&D DEPARTMENT EXCEPT AS AUTHORIZED BY COMPAL ELECTRONICS, INC. NEITHER THIS SHEET NOR THE INFORMATION IT CONTAINS MAY BE USED BY OR DISCLOSED TO ANY THIRD PARTY WITHOUT PRIOR WRITTEN CONSENT OF COMPAL ELECTRONICS, INC.

Compal Electronics, Inc.

Title: **DCIN / BATT CONN / OTP**

Size | Document Number: NCL61 LA-6321P M/B | Rev: 0.22

Date: Friday, March 04, 2011 | Sheet 35 of 47

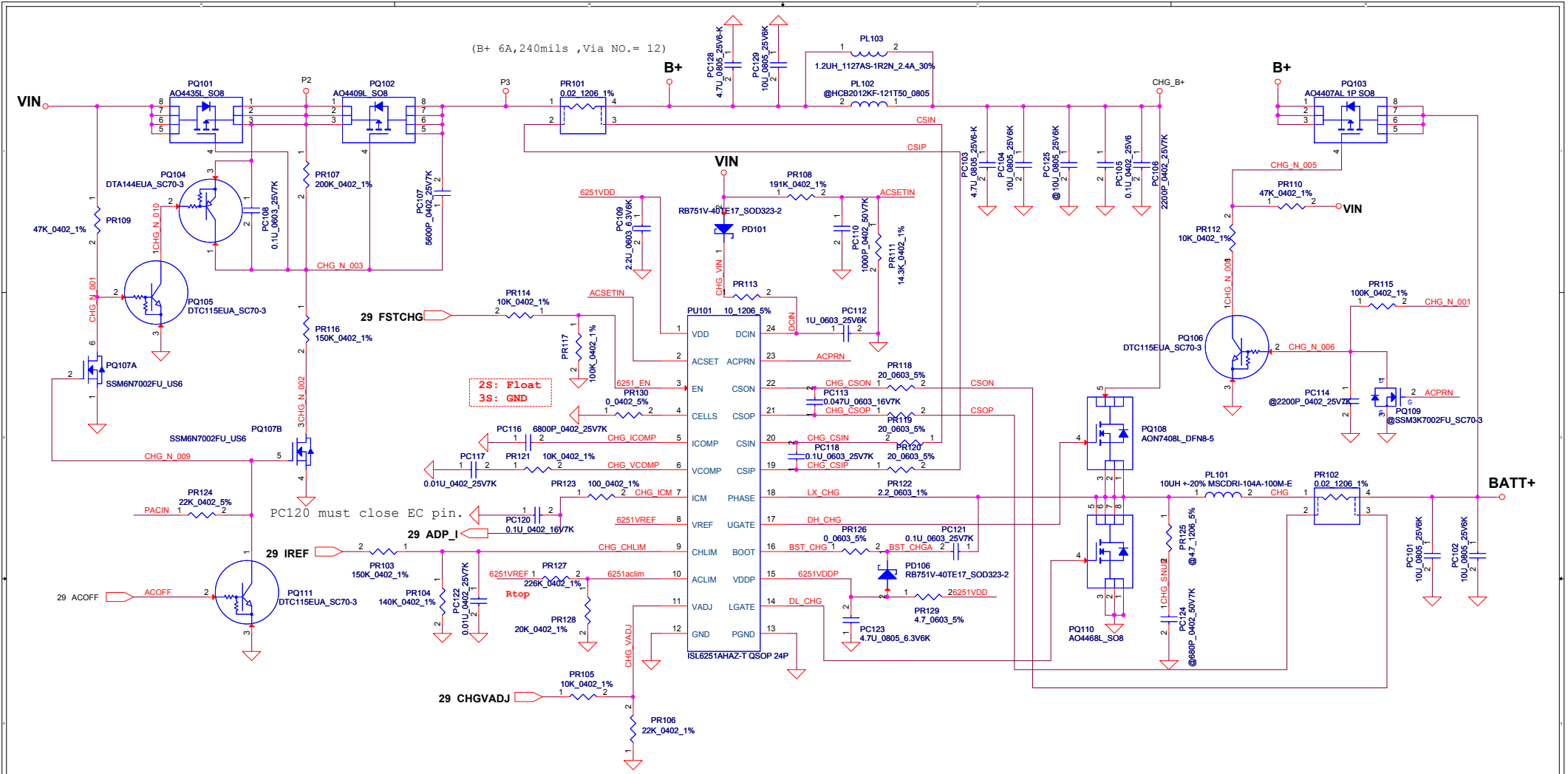


```
CP= 85%*Iada;
Iada=0~4.737A(90W);CP=4.03A;where Racdet=0.020ohm,where Rtop=12.4K
90W for Dis:Rtop:SD00000AJ80
Iada=0~3.421A(65W);CP=2.91A;where Racdet=0.020ohm,where Rtop=226K
65W for UMA:Rtop:SD034226380
Astro2010_01_15 need confirm P/N
```

```
CP mode
Vaclim=VREF*(Rbot//Rinternal/(Rtop//Rinternal+Rbot//Rinternal))
when 90W Vaclim=2.39*(20K//152K/(20K//152K+12.4K//152K))=1.44966V
when 65W Vaclim=2.39*(20K//152K/(20K//152K+226K//152K))=0.38914V
Iinput=(1/Racdet)*((0.05*Vaclim/VREF+0.05))
when 90W,Iinput=(1/0.02)*(0.05*1.44966/2.39+0.05)=4.02A
when 65W,Iinput=(1/0.02)*(0.05*0.38914/2.39+0.05)=2.92A
```

CC=0.25A~3A
IREF=1.016*Icharge
IREF=0.254V~3.048V
VCHLIM need over 95mV

CHGVADJ=(Vcell-4)/0.10627

Vcell	CHGVADJ
4V	0V
4.2V	1.882V

Security Classification	Compal Secret Data		
Issued Date	2009/01/23	Deciphered Date	2010/01/23

THIS SHEET OF ENGINEERING DRAWING IS THE PROPRIETARY PROPERTY OF COMPAL ELECTRONICS, INC. AND CONTAINS CONFIDENTIAL AND TRADE SECRET INFORMATION. THIS SHEET MAY NOT BE TRANSFERED FROM THE CUSTODY OF THE COMPETENT DIVISION OF R&D DEPARTMENT EXCEPT AS AUTHORIZED BY COMPAL ELECTRONICS, INC. NEITHER THIS SHEET NOR THE INFORMATION IT CONTAINS MAY BE USED BY OR DISCLOSED TO ANY THIRD PARTY WITHOUT PRIOR WRITTEN CONSENT OF COMPAL ELECTRONICS, INC.

Compal Electronics, Inc.

Title: **CHARGER**

Size | Document Number: NCL61 LA-6321P M/B | Rev: 0.22

Date: Friday, March 04, 2011 | Sheet 36 of 47

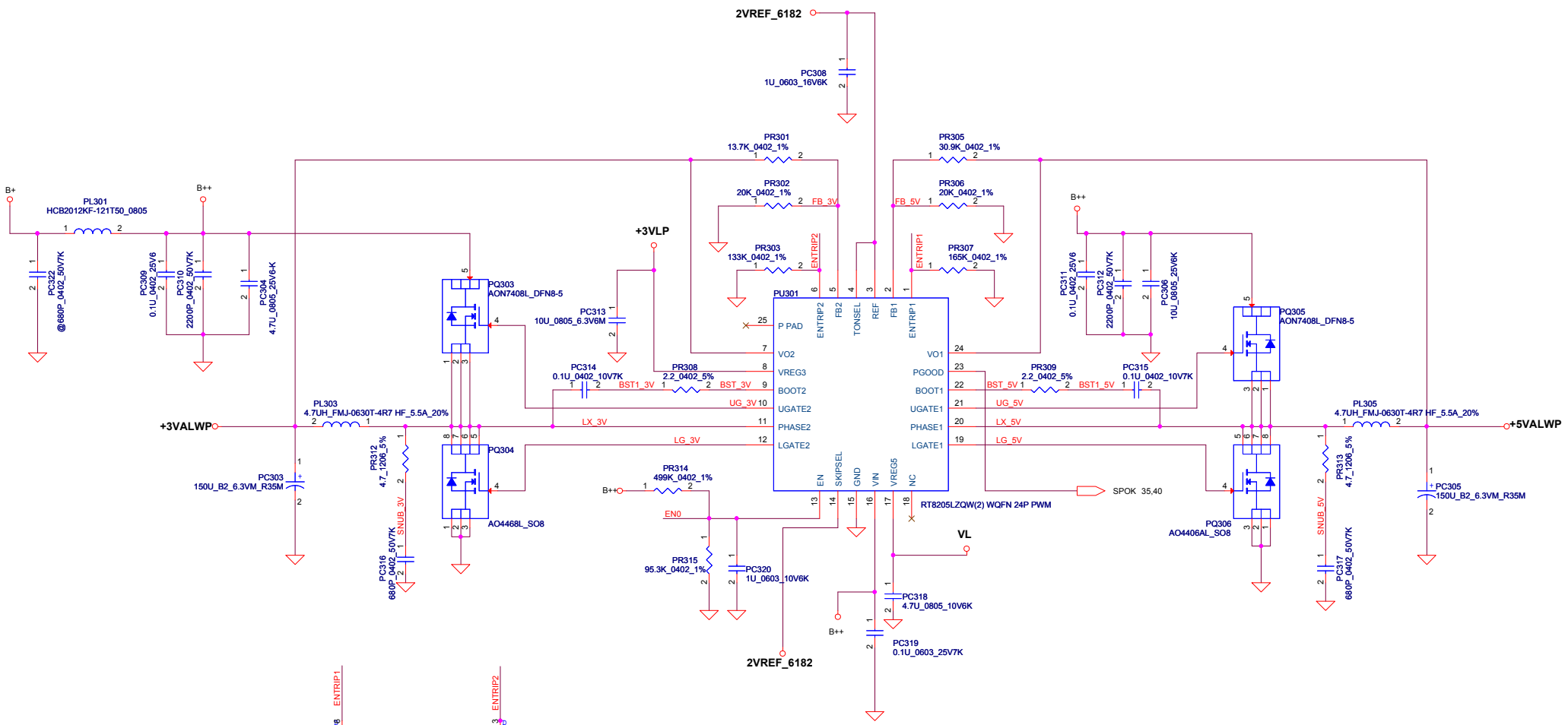

EC:+3VL, reserve PR319, install PR318, PR320 100K
EC:+3VALW, reserve PR318, install PR319, PR320 42.2K

Security Classification	Compal Secret Data		
Issued Date	2007/08/02	Deciphered Date	2008/08/02

THIS SHEET OF ENGINEERING DRAWING IS THE PROPRIETARY PROPERTY OF COMPAL ELECTRONICS, INC. AND CONTAINS CONFIDENTIAL AND TRADE SECRET INFORMATION. THIS SHEET MAY NOT BE TRANSFERED FROM THE CUSTODY OF THE COMPETENT DIVISION OF R&D DEPARTMENT EXCEPT AS AUTHORIZED BY COMPAL ELECTRONICS, INC. NEITHER THIS SHEET NOR THE INFORMATION IT CONTAINS MAY BE USED BY OR DISCLOSED TO ANY THIRD PARTY WITHOUT PRIOR WRITTEN CONSENT OF COMPAL ELECTRONICS, INC.

Compal Electronics, Inc.

Title: **3.3VALWP/5VALWP**

Size: Custom | Document Number: LAXXXX | Rev: 0.22

Date: Friday, March 04, 2011 | Sheet 37 of 47

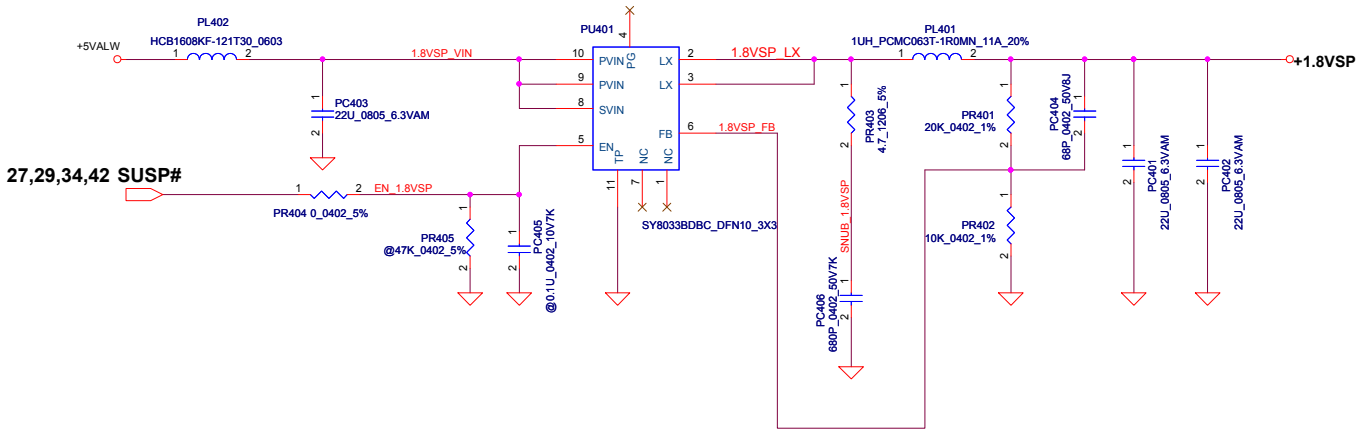

<Vo=1.8V> VFB=0.6V
Vo=VFB*(1+PR401/PR402)=0.6*(1+20K/10K)=1.8V

(4A, 160mils, Via NO.= 8)

Security Classification	Compal Secret Data		
Issued Date	2009/01/23	Deciphered Date	2010/01/23

THIS SHEET OF ENGINEERING DRAWING IS THE PROPRIETARY PROPERTY OF COMPAL ELECTRONICS, INC. AND CONTAINS CONFIDENTIAL AND TRADE SECRET INFORMATION. THIS SHEET MAY NOT BE TRANSFERED FROM THE CUSTODY OF THE COMPETENT DIVISION OF R&D DEPARTMENT EXCEPT AS AUTHORIZED BY COMPAL ELECTRONICS, INC. NEITHER THIS SHEET NOR THE INFORMATION IT CONTAINS MAY BE USED BY OR DISCLOSED TO ANY THIRD PARTY WITHOUT PRIOR WRITTEN CONSENT OF COMPAL ELECTRONICS, INC.

Compal Electronics, Inc.

Title: **+1.8VSP**

Size | Document Number: NCL61 LA-6321P M/B | Rev: 0.22

Date: Friday, March 04, 2011 | Sheet 38 of 47

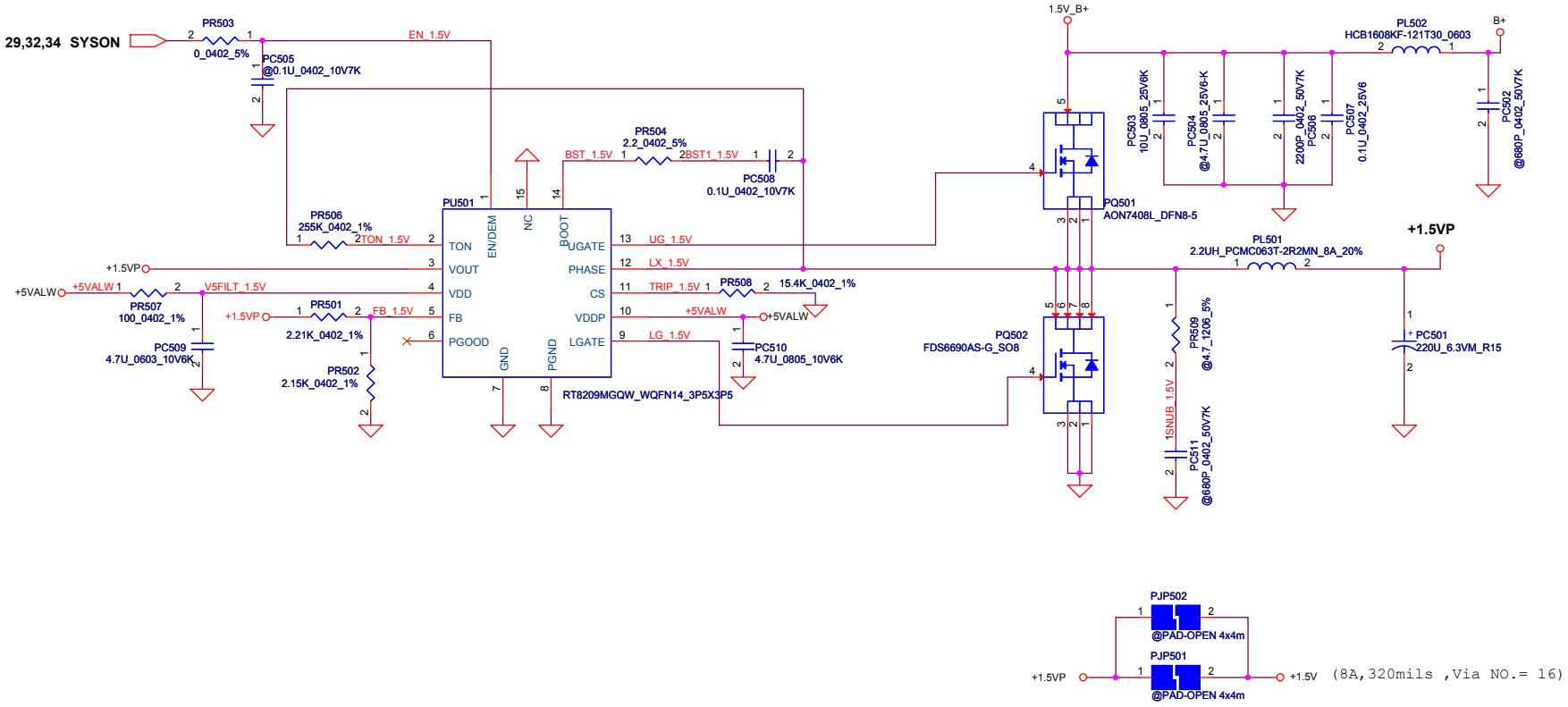

Security Classification	Compal Secret Data		
Issued Date	2007/05/29	Deciphered Date	2008/05/29

THIS SHEET OF ENGINEERING DRAWING IS THE PROPRIETARY PROPERTY OF COMPAL ELECTRONICS, INC. AND CONTAINS CONFIDENTIAL AND TRADE SECRET INFORMATION. THIS SHEET MAY NOT BE TRANSFERED FROM THE CUSTODY OF THE COMPETENT DIVISION OF R&D DEPARTMENT EXCEPT AS AUTHORIZED BY COMPAL ELECTRONICS, INC. NEITHER THIS SHEET NOR THE INFORMATION IT CONTAINS MAY BE USED BY OR DISCLOSED TO ANY THIRD PARTY WITHOUT PRIOR WRITTEN CONSENT OF COMPAL ELECTRONICS, INC.

Compal Electronics, Inc.

Title: **+1.5VP**

Size | Document Number: *LAXXXX* | Rev: 0.22

Date: Friday, March 04, 2011 | Sheet 39 of 47

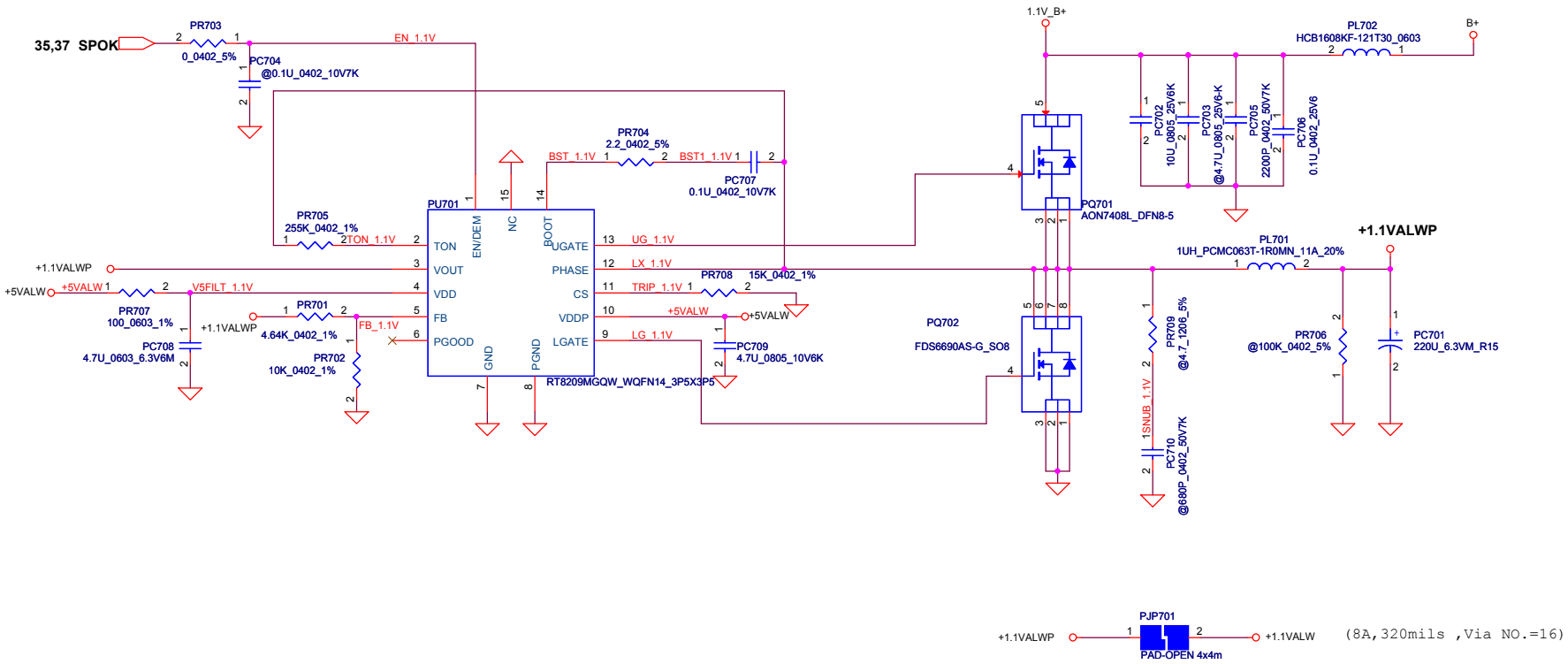

Security Classification	Compal Secret Data		
Issued Date	2009/12/01	Deciphered Date	2010/12/31

THIS SHEET OF ENGINEERING DRAWING IS THE PROPRIETARY PROPERTY OF COMPAL ELECTRONICS, INC. AND CONTAINS CONFIDENTIAL AND TRADE SECRET INFORMATION. THIS SHEET MAY NOT BE TRANSFERED FROM THE CUSTODY OF THE COMPETENT DIVISION OF R&D DEPARTMENT EXCEPT AS AUTHORIZED BY COMPAL ELECTRONICS, INC. NEITHER THIS SHEET NOR THE INFORMATION IT CONTAINS MAY BE USED BY OR DISCLOSED TO ANY THIRD PARTY WITHOUT PRIOR WRITTEN CONSENT OF COMPAL ELECTRONICS, INC.

Compal Electronics, Inc.

Title: **PWR+1.1VALWP**

Size: Custom | Document Number: **LAXXXX** | Rev: 0.22

Date: Friday, March 04, 2011 | Sheet 40 of 47

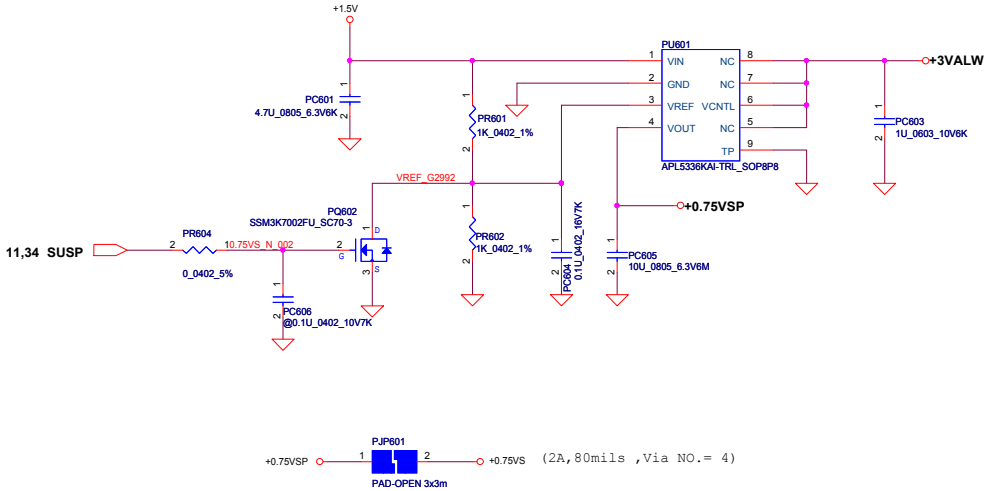

+1.1VALW TO +1.05VSP

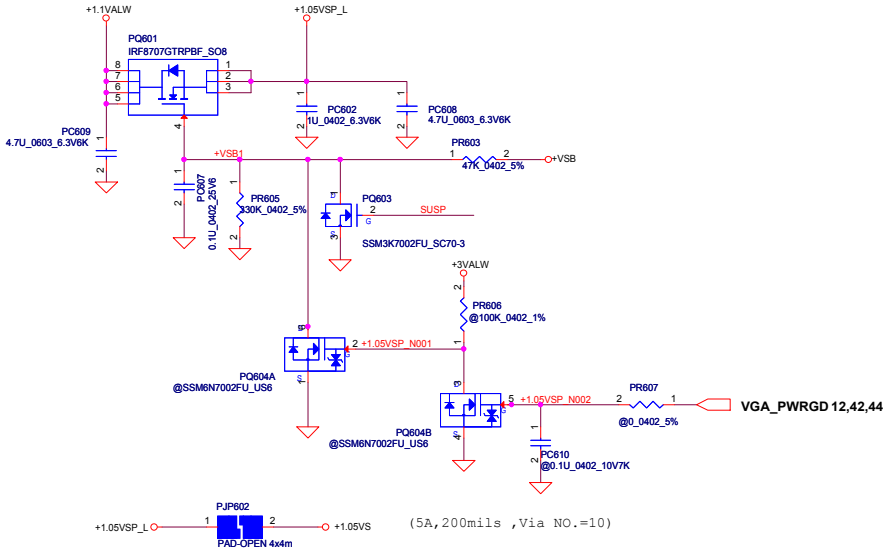

Need to confirm with HW power sequence.

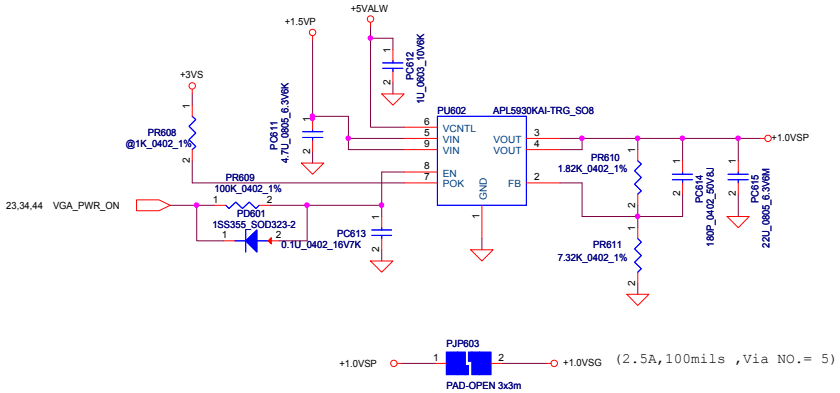

Security Classification	Compal Secret Data		
Issued Date	2006/11/23	Deciphered Date	2007/11/23

THIS SHEET OF ENGINEERING DRAWING IS THE PROPRIETARY PROPERTY OF COMPAL ELECTRONICS, INC. AND CONTAINS CONFIDENTIAL AND TRADE SECRET INFORMATION. THIS SHEET MAY NOT BE TRANSFERED FROM THE CUSTODY OF THE COMPETENT DIVISION OF R&D DEPARTMENT EXCEPT AS AUTHORIZED BY COMPAL ELECTRONICS, INC. NEITHER THIS SHEET NOR THE INFORMATION IT CONTAINS MAY BE USED BY OR DISCLOSED TO ANY THIRD PARTY WITHOUT PRIOR WRITTEN CONSENT OF COMPAL ELECTRONICS, INC.

Compal Electronics, Inc.

Title: **PWR 0.75VSP +1.05VSP**

Size: | Document Number: LAXXXX | Rev: 0.22

Date: Friday, March 04, 2011 | Sheet 41 of 47

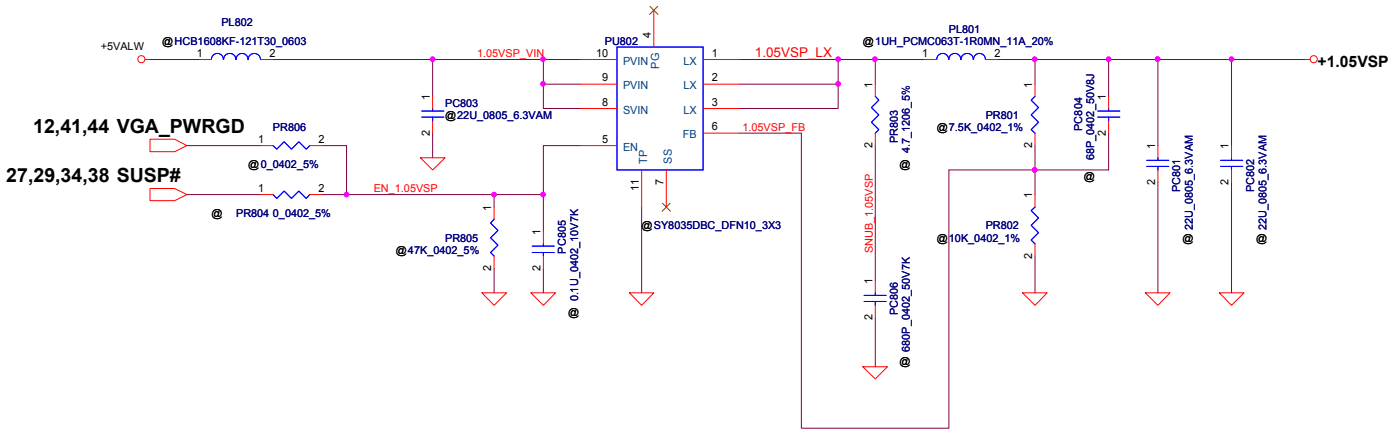

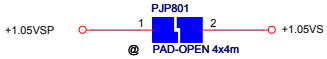

(5A,200mils ,Via NO.=10)

Security Classification	Compal Secret Data		
Issued Date	2009/01/23	Deciphered Date	2010/01/23

THIS SHEET OF ENGINEERING DRAWING IS THE PROPRIETARY PROPERTY OF COMPAL ELECTRONICS, INC. AND CONTAINS CONFIDENTIAL AND TRADE SECRET INFORMATION. THIS SHEET MAY NOT BE TRANSFERED FROM THE CUSTODY OF THE COMPETENT DIVISION OF R&D DEPARTMENT EXCEPT AS AUTHORIZED BY COMPAL ELECTRONICS, INC. NEITHER THIS SHEET NOR THE INFORMATION IT CONTAINS MAY BE USED BY OR DISCLOSED TO ANY THIRD PARTY WITHOUT PRIOR WRITTEN CONSENT OF COMPAL ELECTRONICS, INC.

Compal Electronics, Inc.

Title: **+1.8VSP**

Size | Document Number: NCL61 LA-6321P M/B | Rev: 0.22

Date: Friday, March 04, 2011 | Sheet 42 of 47

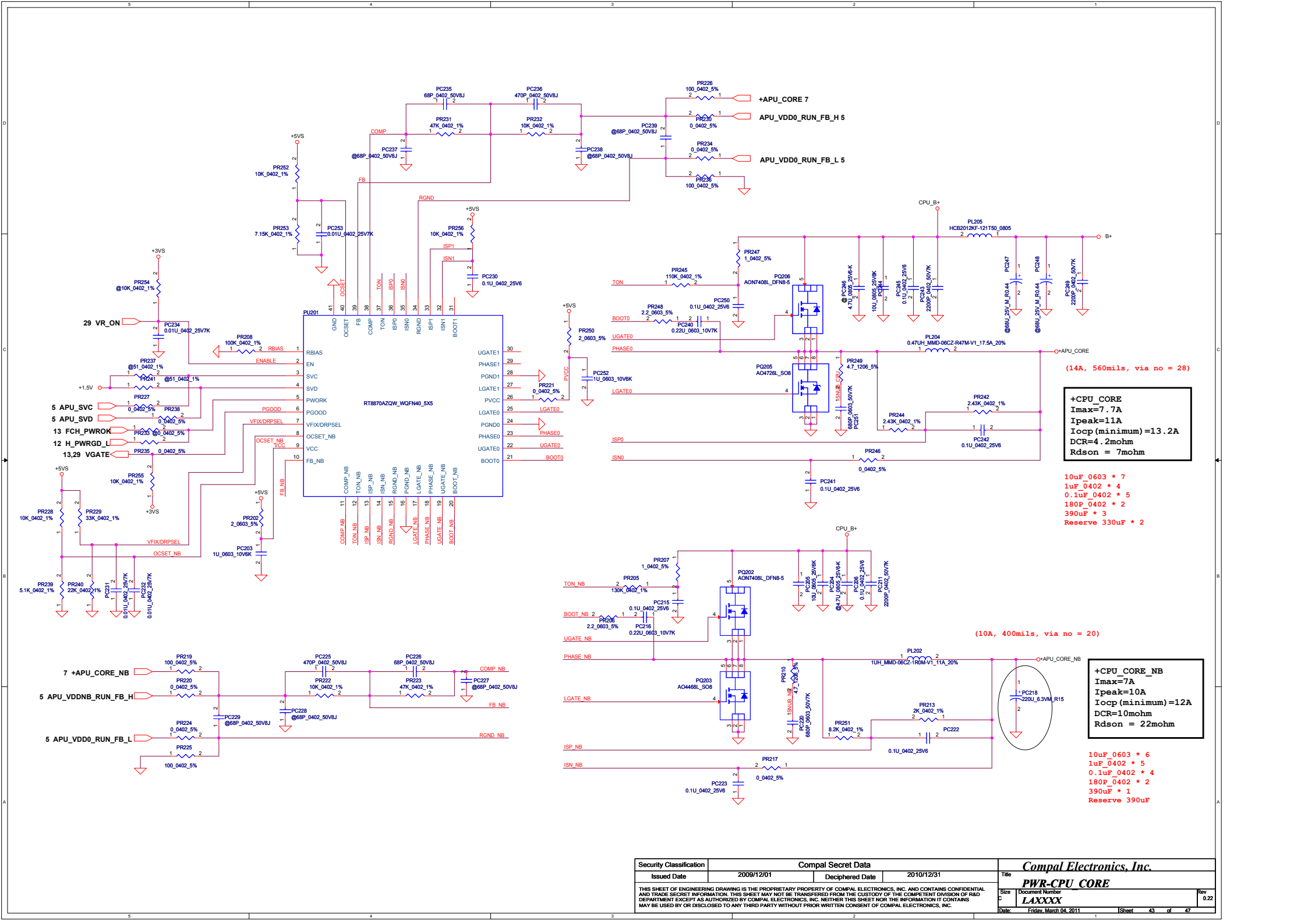

Security Classification	Compal Secret Data		
Issued Date	2009/12/01	Deciphered Date	2010/12/31

THIS SHEET OF ENGINEERING DRAWING IS THE PROPRIETARY PROPERTY OF COMPAL ELECTRONICS, INC. AND CONTAINS CONFIDENTIAL AND TRADE SECRET INFORMATION. THIS SHEET MAY NOT BE TRANSFERRED FROM THE CUSTODY OF THE COMPETENT DIVISION OF R&D DEPARTMENT EXCEPT AS AUTHORIZED BY COMPAL ELECTRONICS, INC. NEITHER THIS SHEET NOR THE INFORMATION IT CONTAINS MAY BE USED BY OR DISCLOSED TO ANY THIRD PARTY WITHOUT PRIOR WRITTEN CONSENT OF COMPAL ELECTRONICS, INC.

Compal Electronics, Inc.

Title: PWR-CPU_CORE

Size: C | Document Number: LAXXXX | Rev: 0.22

Date: Friday, March 04, 2011 | Sheet 43 of 47

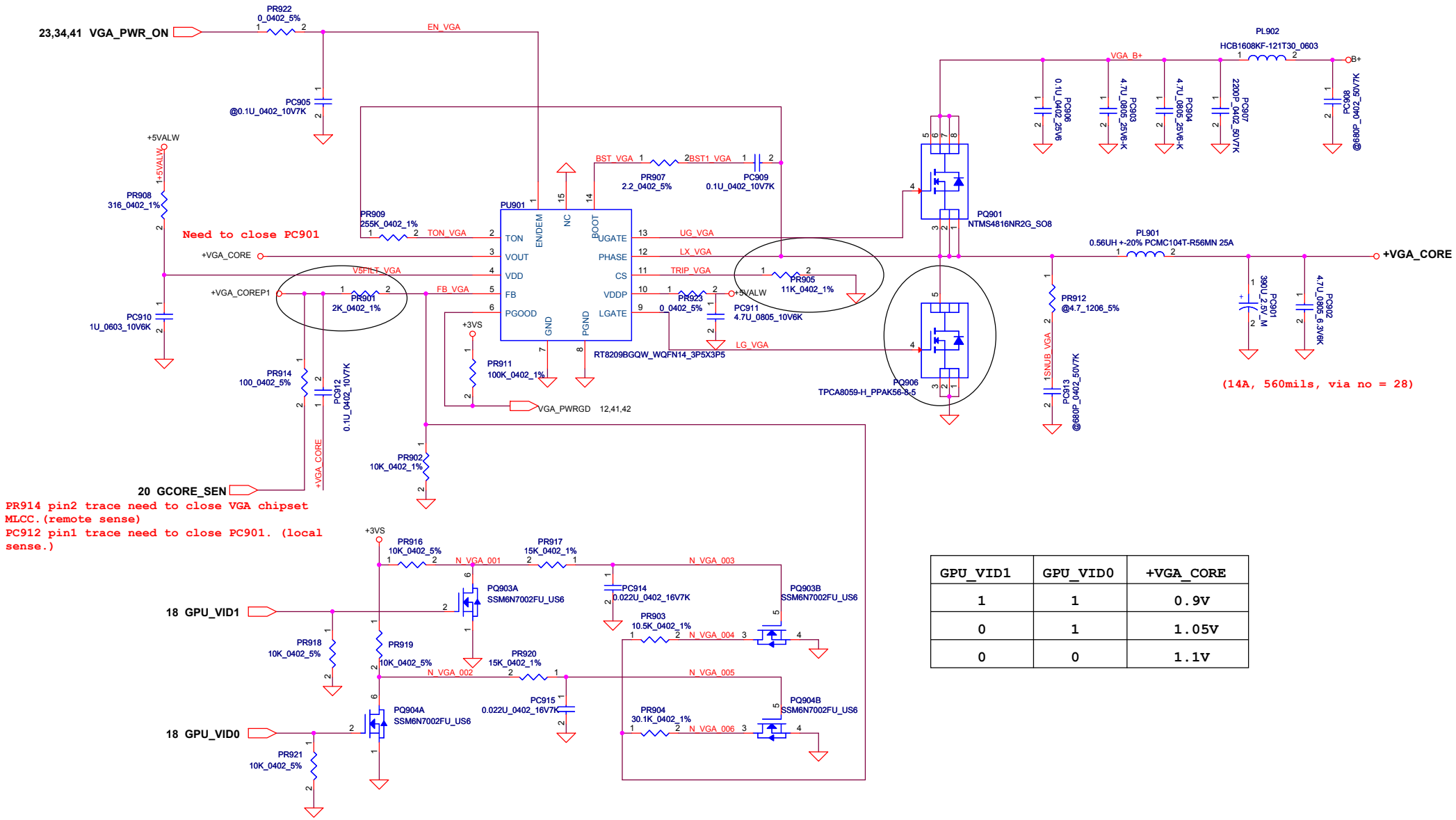

GPU_VID1	GPU_VID0	+VGA_CORE
1	1	0.9V
0	1	1.05V
0	0	1.1V

Security Classification	Compal Secret Data		
Issued Date	2007/05/29	Deciphered Date	200810/11

THIS SHEET OF ENGINEERING DRAWING IS THE PROPRIETARY PROPERTY OF COMPAL ELECTRONICS, INC. AND CONTAINS CONFIDENTIAL AND TRADE SECRET INFORMATION. THIS SHEET MAY NOT BE TRANSFERED FROM THE CUSTODY OF THE COMPETENT DIVISION OF R&D DEPARTMENT EXCEPT AS AUTHORIZED BY COMPAL ELECTRONICS, INC. NEITHER THIS SHEET NOR THE INFORMATION IT CONTAINS MAY BE USED BY OR DISCLOSED TO ANY THIRD PARTY WITHOUT PRIOR WRITTEN CONSENT OF COMPAL ELECTRONICS, INC.

Compal Electronics, Inc.

Title: **VGA_CORE**

Size | Document Number: LAXXXX | Rev: 0.22

Date: Friday, March 04, 2011 | Sheet 44 of 47

Item	Reason for change	PG#	Modify List	Date	Phase
1					
2					
3					
4					
5					
6					
7					

Security Classification: Compal Secret Data
Issued Date: 2008/09/15 Deciphered Date: 2010/12/31
THIS SHEET OF ENGINEERING DRAWING IS THE PROPRIETARY PROPERTY OF COMPAL ELECTRONICS, INC. AND CONTAINS CONFIDENTIAL AND TRADE SECRET INFORMATION. THIS SHEET MAY NOT BE TRANSFERED FROM THE CUSTODY OF THE COMPETENT DIVISION OF R&D DEPARTMENT EXCEPT AS AUTHORIZED BY COMPAL ELECTRONICS, INC. NEITHER THIS SHEET NOR THE INFORMATION IT CONTAINS MAY BE USED BY OR DISCLOSED TO ANY THIRD PARTY WITHOUT PRIOR WRITTEN CONSENT OF COMPAL ELECTRONICS, INC.

Compal Electronics, Inc.
Title: Changed-List History
Size: Document Number: LA-4902P Rev: 0.22
Date: Friday, March 04, 2011 Sheet 45 of 47

Version change list (P.I.R. List)

Item	Fixed Issue	Reason for change	Rev.	PG#	Modify List	Date	Phase
1		DFB request	0.11	PG#10	change JLVDS1 connector to 40 pin and add JCM1 6pin	12/17	ER
2		EC remove ext crystal	0.11	PG#29	Add R1787 and C1677	12/17	ER
3		DFB request for soldering	0.11	PG#30 PG#33	Change JTP1 and JBTN1 footprint	12/17	ER
4		JUSB2 no function	0.11	PG#31	Update JUSB2 symbol	12/17	ER
5		LID issue	0.11	PG#13	R930 change to pop	12/17	ER
6		LID issue	0.11	PG#29	LID_SW# added a pull up 10Kohm. (R35)	12/17	ER
7		Update Broad ID	0.11	PG#29	Change R1606 to 154Kohm	12/17	ER
8		for BIOS crisis	0.12	PG#14	Add U11	12/17	ER
9		DDR3 SPD	0.12	PG#8	Reserve R152 , R155	12/17	ER
10		For discharge spec	0.13	PG#24	Add R1788 and Q113 discharge schematic	12/17	ER
11		For EMI test	0.2	PG#11	Remove Level Shifter schematic	12/17	ER
12		BIOS change to share ROM	0.2	PG#16 PG#29	Pop R594 and R602 , unpop R601 and R550 change U48 meterial	12/17	ER
13		Fix S3 resume black screen	0.21	PG#6	Add R1790 , R1791 68ohm pull down	02/18	PR
14		DFX request	0.21	PG#11	Update JDIMM2 fooprint	02/18	PR
15		Fix S3 resume too long	0.21	PG#18	Add R1795 1M ohm	02/18	PR
16		Fix assembly issue	0.21	PG#29 PG#25	Update JKB1 and JAU1 footprint for ME connector	02/18	PR
17		EMI request	0.22	PG#11	pop L11~L14	02/22	PR
18							
19							
20							
21							
22							
23							
24							
25							
26							
27							

THIS SHEET OF ENGINEERING DRAWING IS THE PROPRIETARY PROPERTY OF COMPAL ELECTRONICS, INC. AND CONTAINS CONFIDENTIAL AND TRADE SECRET INFORMATION. THIS SHEET MAY NOT BE TRANSFERED FROM THE CUSTODY OF THE COMPETENT DIVISION OF R&D DEPARTMENT EXCEPT AS AUTHORIZED BY COMPAL ELECTRONICS, INC. NEITHER THIS SHEET NOR THE INFORMATION IT CONTAINS MAY BE USED BY OR DISCLOSED TO ANY THIRD PARTY WITHOUT PRIOR WRITTEN CONSENT OF COMPAL ELECTRONICS, INC.

Security Classification	Compal Secret Data		
Issued Date	2010/09/30	Deciphered Date	2010/12/31

Compal Electronics, Inc.

Title: **HW-PIR**

Size: Custom | Document Number: LA-7323P | Rev: 0.22

Date: Friday, March 04, 2011 | Sheet 46 of 47

POWER SEQUENCE

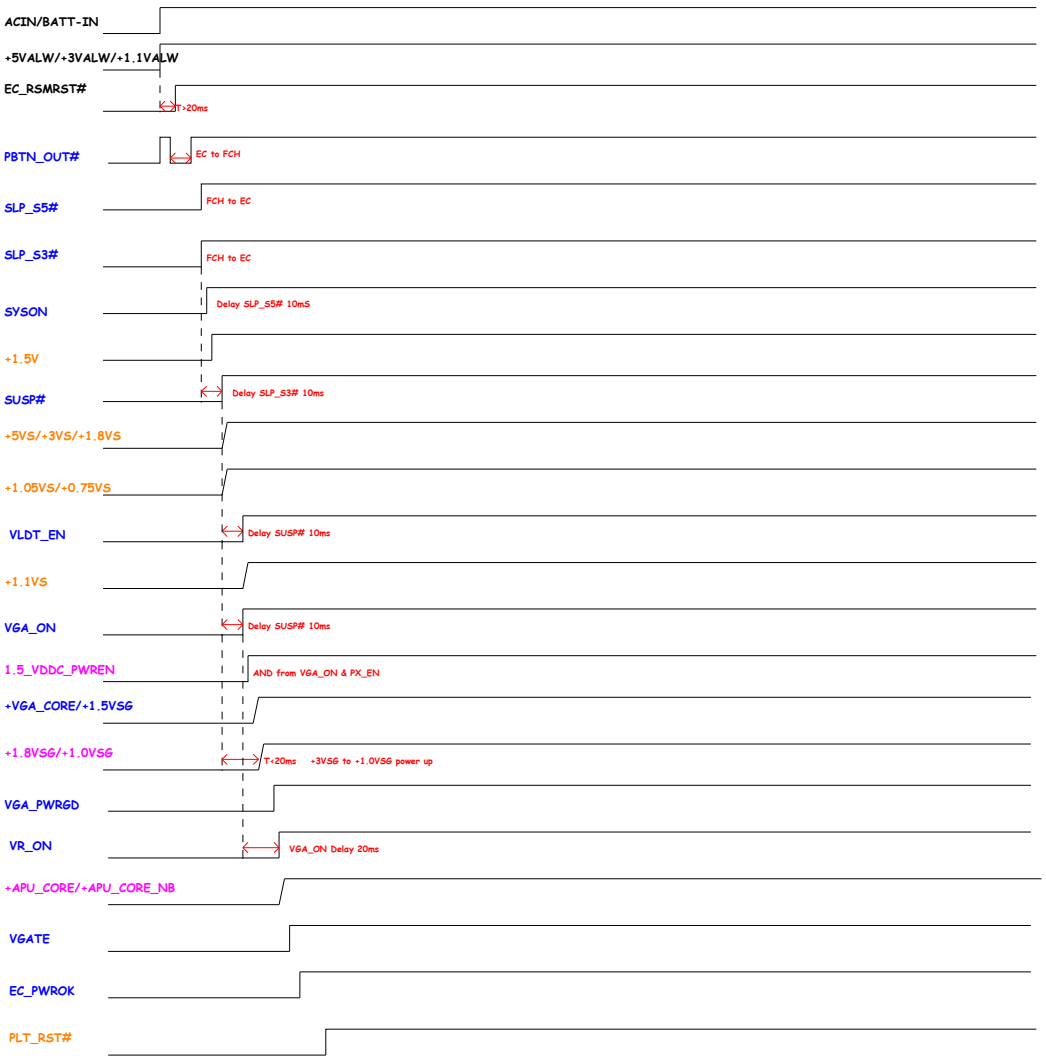

Security Classification	Compal Secret Data		
Issued Date	2010/09/30	Deciphered Date	2010/12/31

THIS SHEET OF ENGINEERING DRAWING IS THE PROPRIETARY PROPERTY OF COMPAL ELECTRONICS, INC. AND CONTAINS CONFIDENTIAL AND TRADE SECRET INFORMATION. THIS SHEET MAY NOT BE TRANSFERRED FROM THE CUSTODY OF THE COMPETENT DIVISION OF R&D DEPARTMENT EXCEPT AS AUTHORIZED BY COMPAL ELECTRONICS, INC. NEITHER THIS SHEET NOR THE INFORMATION IT CONTAINS MAY BE USED BY OR DISCLOSED TO ANY THIRD PARTY WITHOUT PRIOR WRITTEN CONSENT OF COMPAL ELECTRONICS, INC.

Title: Power Sequence

Size: | Document Number: LA-7323P | Rev: 0.4A

Date: Friday, March 04, 2011 | Sheet 47 of 47