SAMSUNG PROPRIETARY
THIS DOCUMENT CONTAINS CONFIDENTIAL PROPRIETARY INFORMATION THAT IS SAMSUNG ELECTRONICS CO'S PROPERTY. DO NOT DISCLOSE TO OR DUPLICATE FOR OTHERS EXCEPT AS AUTHORIZED BY SAMSUNG.

BREMEN-M 15"/17"

CPU : Intel Arrandale
Chip Set : Intel Ibex Peak(HM55)
GFX : N11P/ M-GE1(40nm)
Remarks : Calpella Platform

Model Name	: BREMEN-M
PBA Name	: MAIN
PCB Code	: BA41-01174A
Dev. Step	: PR
Revision	: 1.0
T.R. Date	: 2009.11.12

Design	CHECK	APPROVAL

■ *Owner : SEC Mobile R & D* *Signature :* *X*

Sheet 1. Cover
Sheet 2-6. Diagram (Block/Power) & Annotations
Sheet 7. Clock Generator -CK505 Shrink Version
Sheet 8 Thermal Sensor & FAN
Sheet 9-12 Arrandale CPU
Sheet 13. DDR3 SODIMM A
Sheet 14. DDR3 SODIMM B
Sheet 15-19. IBEX PEAK
Sheet 20-24. GFx_External_N11X
Sheet 25-28. Graphics_Memory_gDDR3 1g bit
Sheet 29. Graphic Strap
Sheet 30-32. Graphic Interface
Sheet 33-34. High Definition Audio (ALC269Q-GR)
Sheet 35. LAN_Marvell_88E8059
Sheet 36. Express_Card
Sheet 37. MultiCard_AU6336 (3 in 1)
Sheet 38. PCIE_Minicard_Slot (Half type only)
Sheet 39. SATA I/F CONN
Sheet 40. MICOM_MEC1308-NU
Sheet 41. Micom Glue Logic
Sheet 42. LED_Switch
Sheet 43. USB Port
Sheet 44. Touchpad LED
Sheet 45. USB Interface
Sheet 46. Charger
Sheet 47. PWR_3V_5V
Sheet 48. PWR_Calpella
Sheet 49. PWR_Memory
Sheet 50. PWR_CPU_VRM
Sheet 51. PWR_GFX_Ext
Sheet 52. PWR_MV_Switched
Sheet 53. PWR_MV_DisCharger
Sheet 54. 2 USB Port & Power S/W SUB B'D
Sheet 55. SATA ODD SUB B'D Battery IF B'D
Sheet 56. EMC Capacitor & ICT Port

Samsung Confidential

DRAW: MS YANG	DATE: 8/11/2009	TITLE: BREMEN-M MAIN COVER	SAMSUNG ELECTRONICS
CHECK: SE LEE	DEV. STEP: PV		
APPROVAL: MK KIM	REV: REV 0.9		PART NO.: BA41-01174A
MODULE CODE	LAST EDIT: October 20, 2009 21:30:55 PM	PAGE 1 OF 56	

SAMSUNG PROPRIETARY
THIS DOCUMENT CONTAINS CONFIDENTIAL PROPRIETARY INFORMATION THAT IS SAMSUNG ELECTRONICS CO'S PROPERTY. DO NOT DISCLOSE TO OR DUPLICATE FOR OTHERS EXCEPT AS AUTHORIZED BY SAMSUNG.

BLOCK DIAGRAM

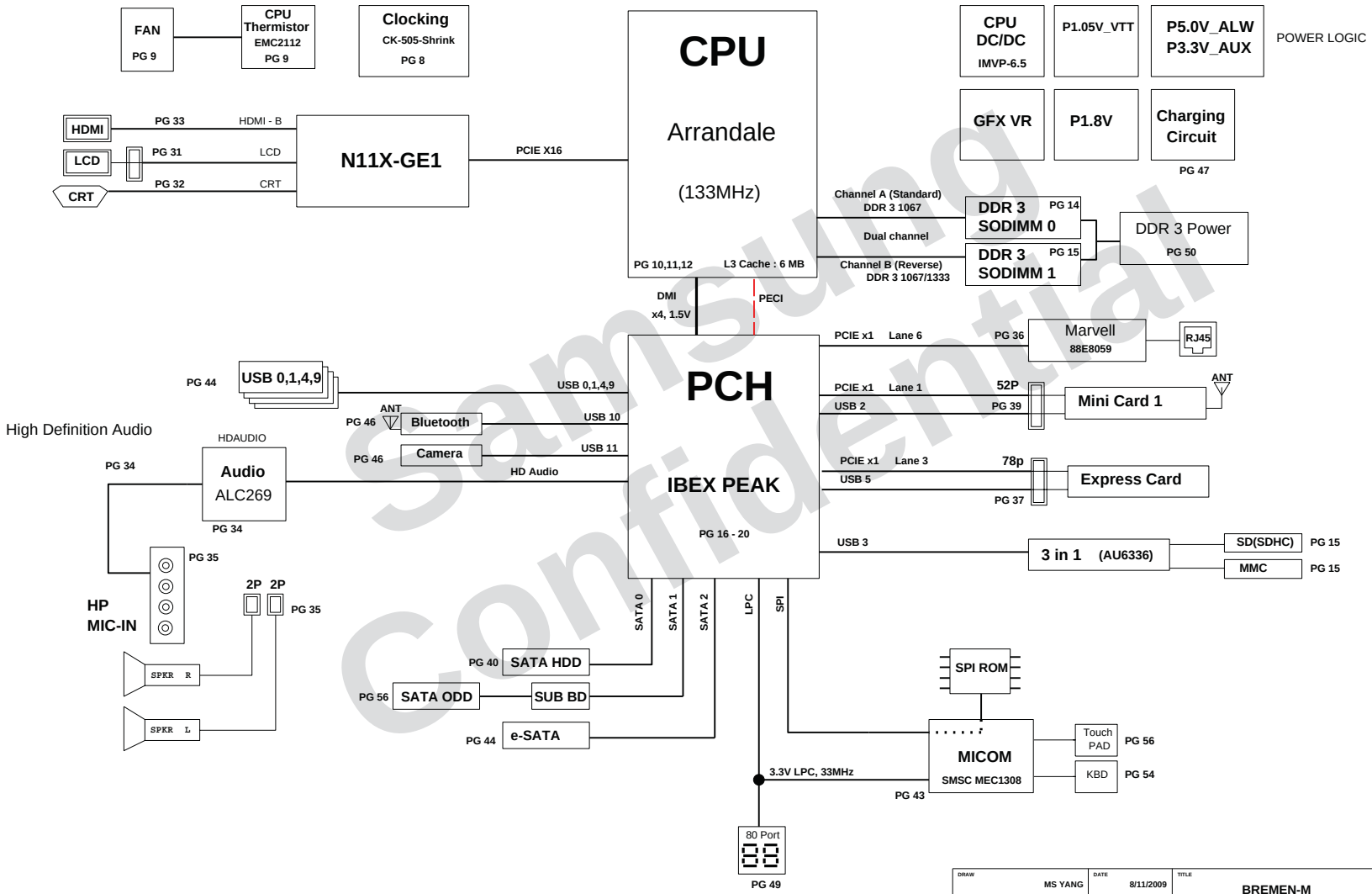

Samsung Confidential

DRAW: MS YANG	DATE: 8/11/2009	TITLE: BREMEN-M MAIN BLOCK DIAGRAM	SAMSUNG ELECTRONICS
CHECK: SE LEE	DEV. STEP: PV		
APPROVAL: MK KIM	REV: REV 0.9		PART NO.: BA41-01174A
MODULE CODE: undefined	LAST EDIT: October 20, 2009 21:30:55 PM		PAGE 2 OF 56

SAMSUNG PROPRIETARY
THIS DOCUMENT CONTAINS CONFIDENTIAL PROPRIETARY INFORMATION THAT IS SAMSUNG ELECTRONICS CO'S PROPERTY. DO NOT DISCLOSE TO OR DUPLICATE FOR OTHERS EXCEPT AS AUTHORIZED BY SAMSUNG.

POWER DIAGRAM

Rev 0.1

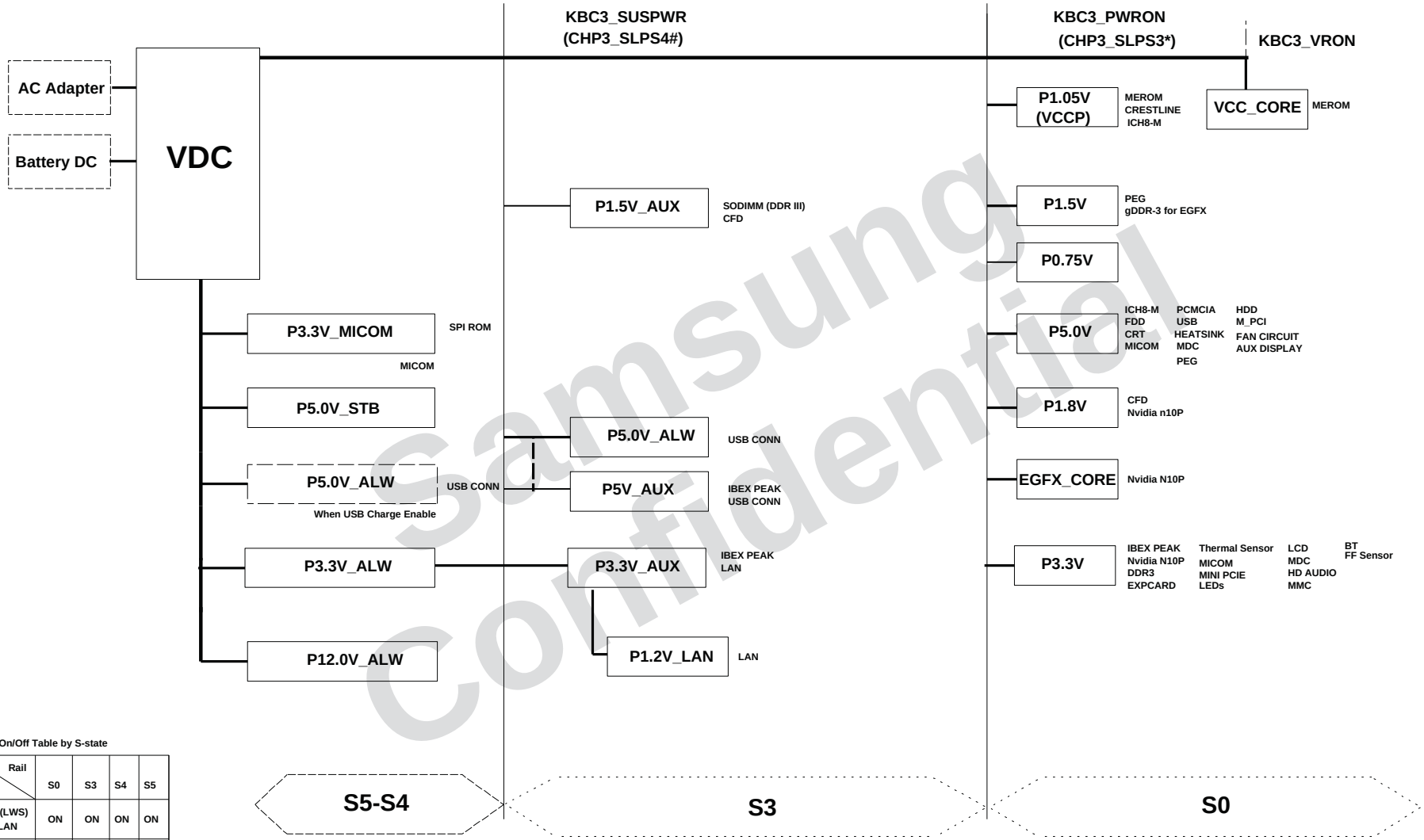

Samsung Confidential

Power On/Off Table by S-state

Rail / State	S0	S3	S4	S5
+V*A(LWS) +V*LAN	ON	ON	ON	ON
+1.8V_AUX +0.9V	ON	ON	—	—
+V*AUX	ON	ON	—	—
+V	ON	—	—	—
+V* (CORE)	ON	—	—	—

DRAW: MS YANG	DATE: 8/11/2009	TITLE: BREMEN-M MAIN POWER DIAGRAM	SAMSUNG ELECTRONICS
CHECK: SE LEE	DEV. STEP: PV		
APPROVAL: MK KIM	REV: REV 0.9		PART NO.: BA41-01174A
MODULE CODE: undefined	LAST EDIT: October 20, 2009 21:30:55 PM		PAGE 3 OF 56

SAMSUNG PROPRIETARY
THIS DOCUMENT CONTAINS CONFIDENTIAL PROPRIETARY INFORMATION THAT IS SAMSUNG ELECTRONICS CO'S PROPERTY. DO NOT DISCLOSE TO OR DUPLICATE FOR OTHERS EXCEPT AS AUTHORIZED BY SAMSUNG.

POWER RAILS ANALYSIS

Rev. 0.6 (060920)

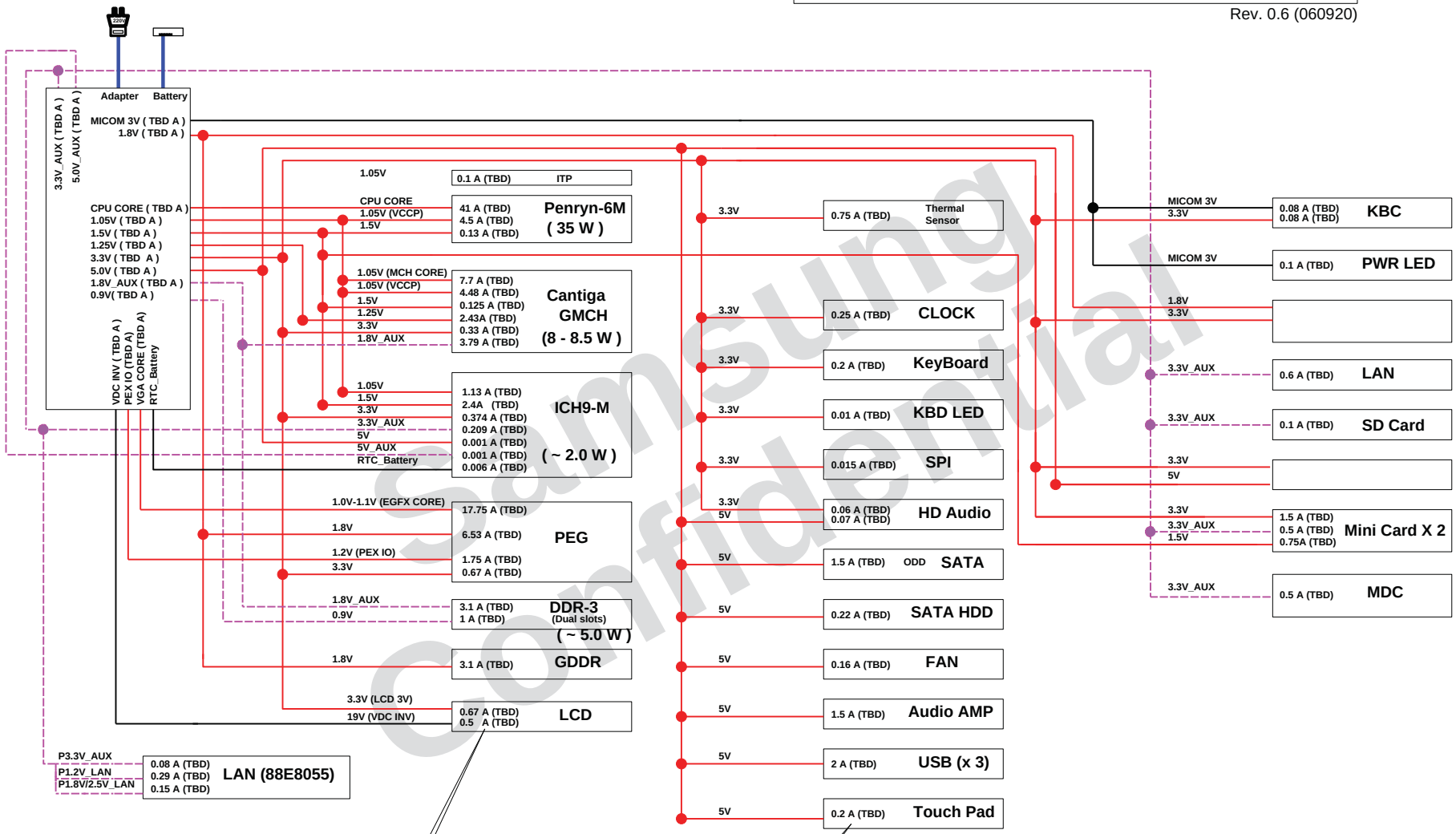

Value by Datasheet/Application notes (Value by measurement)

Samsung Confidential

DRAW: MS YANG	DATE: 8/11/2009	TITLE: BREMEN-M MAIN POWER RAILS	SAMSUNG ELECTRONICS
CHECK: SE LEE	DEV. STEP: PV		
APPROVAL: MK KIM	REV: REV 0.9		PART NO.: BA41-01174A
MODULE CODE: undefined	LAST EDIT: October 20, 2009 21:30:55 PM		PAGE 4 OF 56

SAMSUNG PROPRIETARY
THIS DOCUMENT CONTAINS CONFIDENTIAL PROPRIETARY INFORMATION THAT IS SAMSUNG ELECTRONICS CO'S PROPERTY. DO NOT DISCLOSE TO OR DUPLICATE FOR OTHERS EXCEPT AS AUTHORIZED BY SAMSUNG.

PRELIMINARY

POWER SEQUENCE

Rev. 0.5

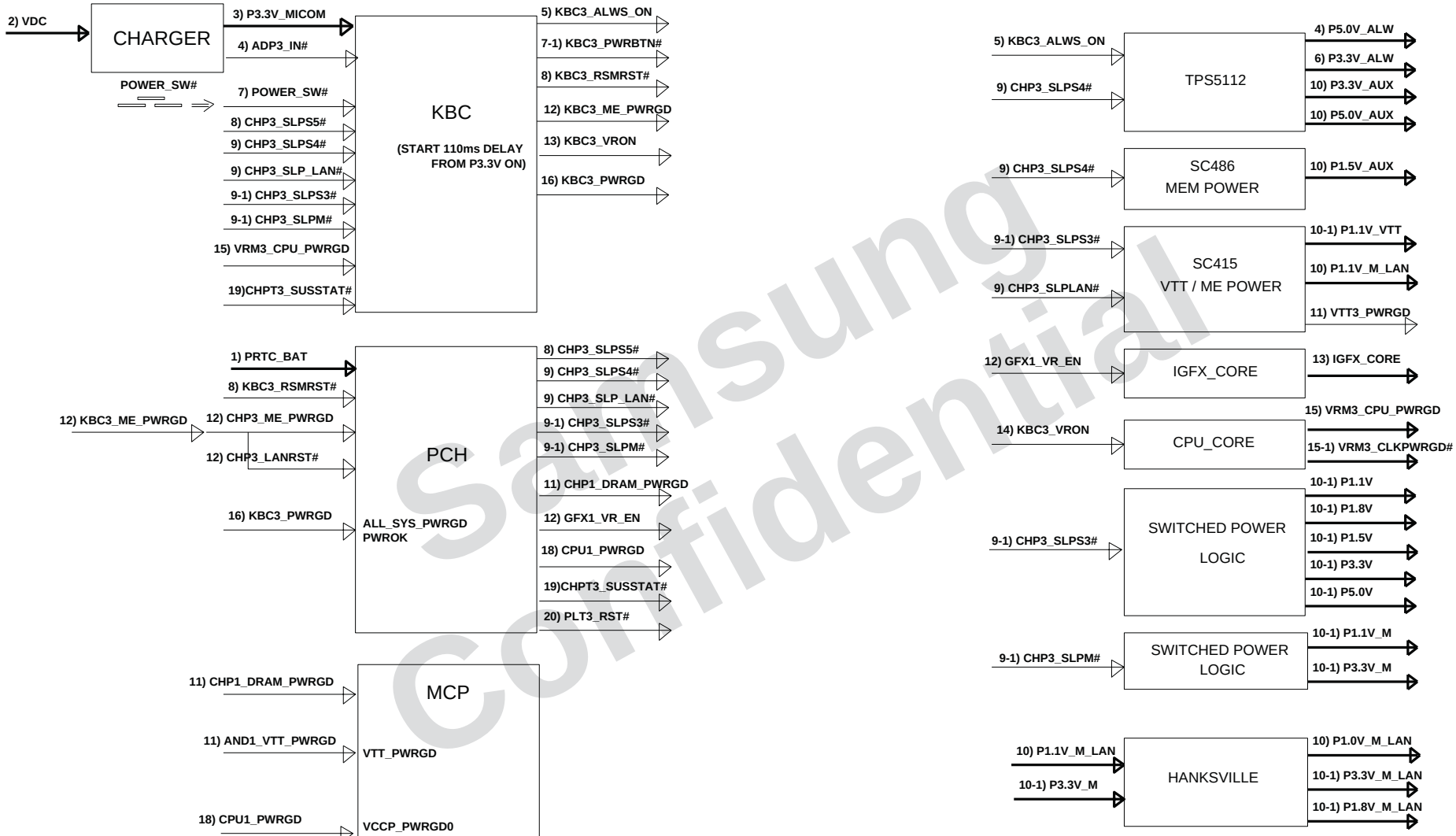

Samsung Confidential

DRAW: MS YANG	DATE: 8/11/2009	TITLE: BREMEN-M MAIN POWER SEQUENCE	SAMSUNG ELECTRONICS
CHECK: SE LEE	DEV. STEP: PV		
APPROVAL: MK KIM	REV: REV 0.9		PART NO. BA41-01174A
MODULE CODE: undefined	LAST EDIT: October 20, 2009 21:30:55 PM		PAGE 5 OF 56

SAMSUNG PROPRIETARY
THIS DOCUMENT CONTAINS CONFIDENTIAL
PROPRIETARY INFORMATION THAT IS
SAMSUNG ELECTRONICS CO'S PROPERTY.
DO NOT DISCLOSE TO OR DUPLICATE FOR OTHERS
EXCEPT AS AUTHORIZED BY SAMSUNG.

CLOCK DISTRIBUTION Rev. 0.1

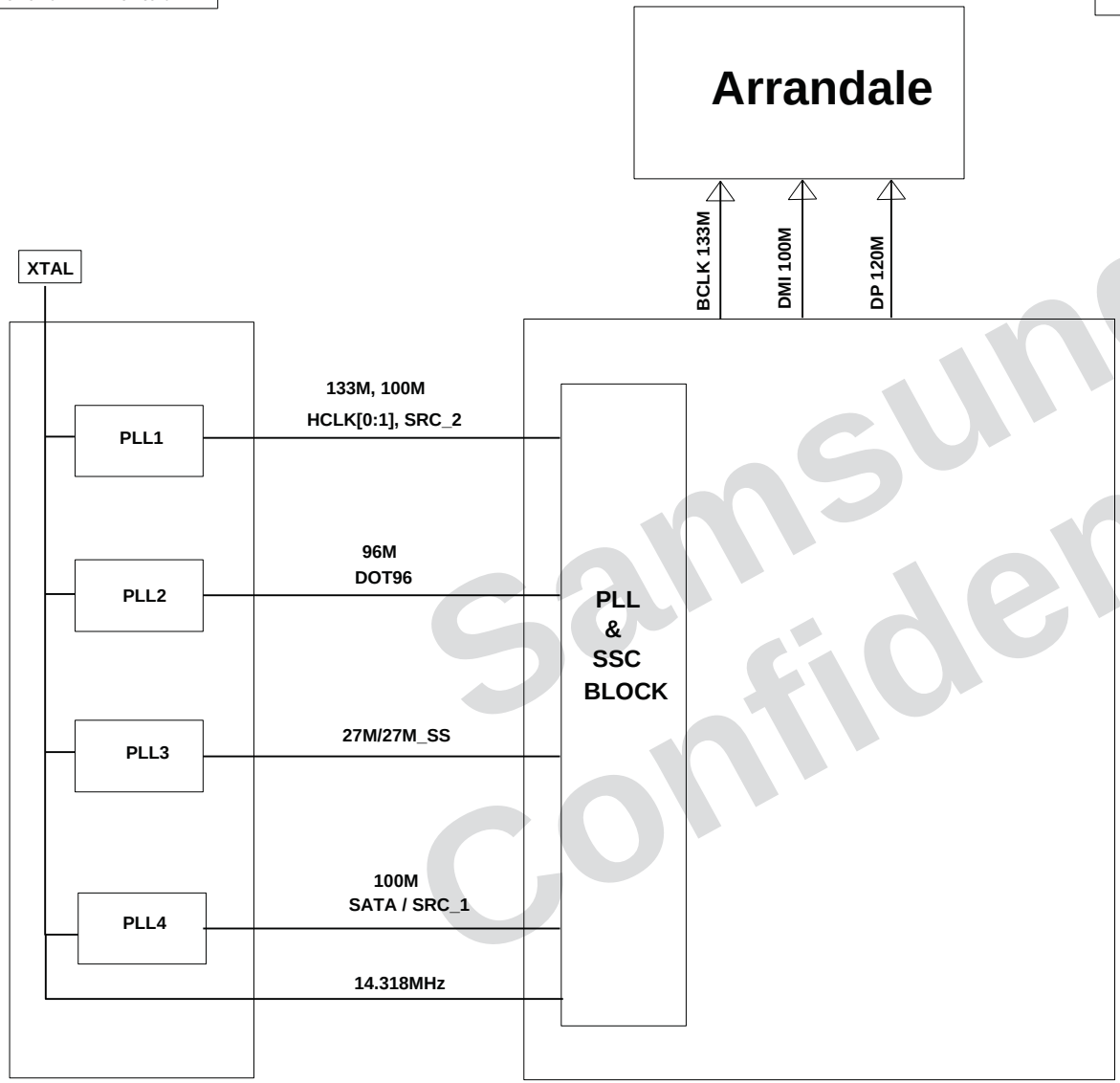

Samsung Confidential

DRAW: MS YANG	DATE: 8/11/2009	TITLE: BREMEN-M MAIN CLOCK DIAGRAM	SAMSUNG ELECTRONICS
CHECK: SE LEE	DEV. STEP: PV		
APPROVAL: MK KIM	REV: REV 0.9		PART NO.: BA41-01174A
MODULE CODE: undefined	LAST EDIT: October 20, 2009 21:30:55 PM	PAGE 6 OF 56	

SAMSUNG PROPRIETARY
THIS DOCUMENT CONTAINS CONFIDENTIAL PROPRIETARY INFORMATION THAT IS SAMSUNG ELECTRONICS CO'S PROPERTY. DO NOT DISCLOSE TO OR DUPLICATE FOR OTHERS EXCEPT AS AUTHORIZED BY SAMSUNG.

CK505M SHRINK VERSION

CPU_MODE SEL

Pin 30	CPU_0	CPU_1
CPU_SEL = 0	133MHz	133MHz

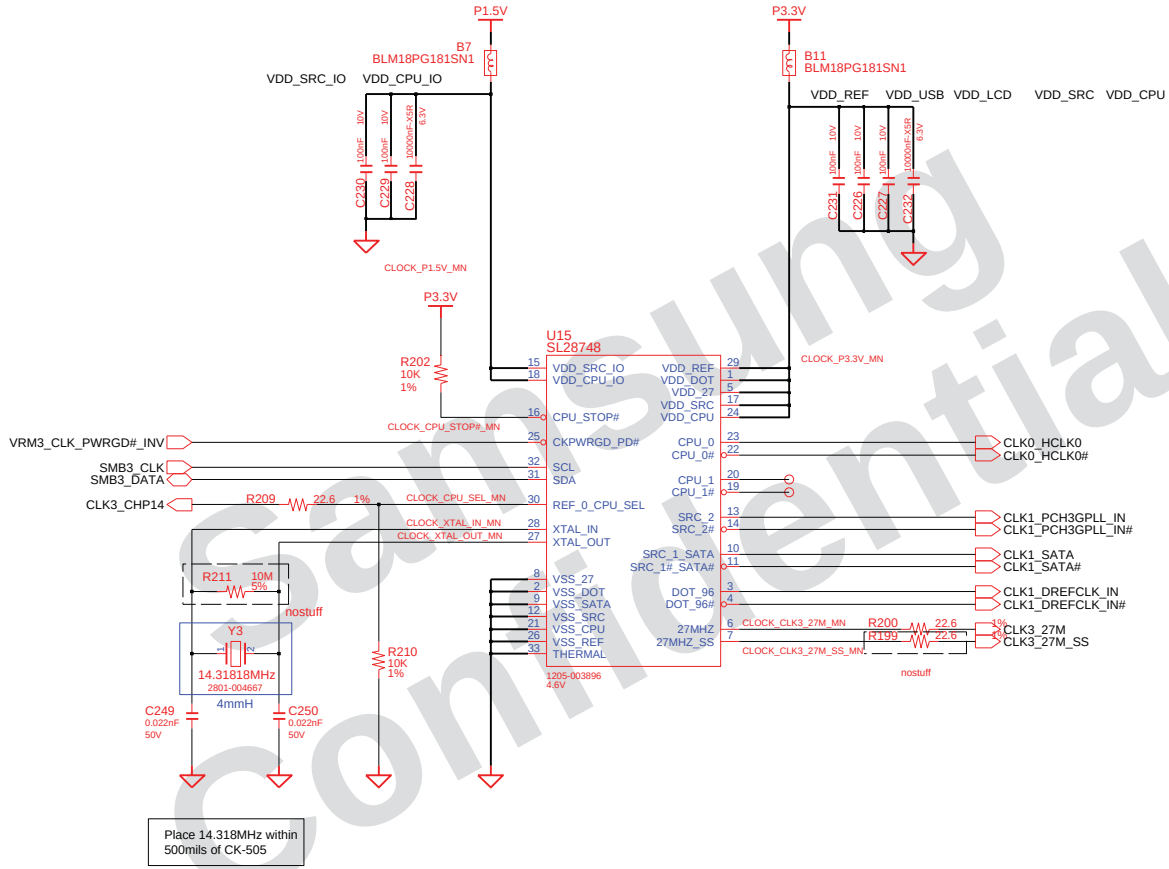

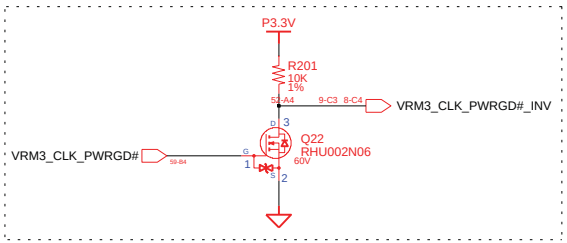

DESIGN: MS YANG	DATE: 8/11/2009	TITLE: BREMEN-M CLOCK CK505-SHRINK	SAMSUNG ELECTRONICS
CHECK: SE LEE	DEV. STEP: PV		
APPROVAL: MK KIM	REV: REV 0.9		PART NO. BA41-01174A
MODULE CODE	LAST EDIT: October 20, 2009 21:30:55 PM		PAGE 7 OF 56

Samsung Confidential

SAMSUNG PROPRIETARY
THIS DOCUMENT CONTAINS CONFIDENTIAL PROPRIETARY INFORMATION THAT IS SAMSUNG ELECTRONICS CO'S PROPERTY. DO NOT DISCLOSE TO OR DUPLICATE FOR OTHERS EXCEPT AS AUTHORIZED BY SAMSUNG.

THERMAL SENSOR & FAN CONTROL

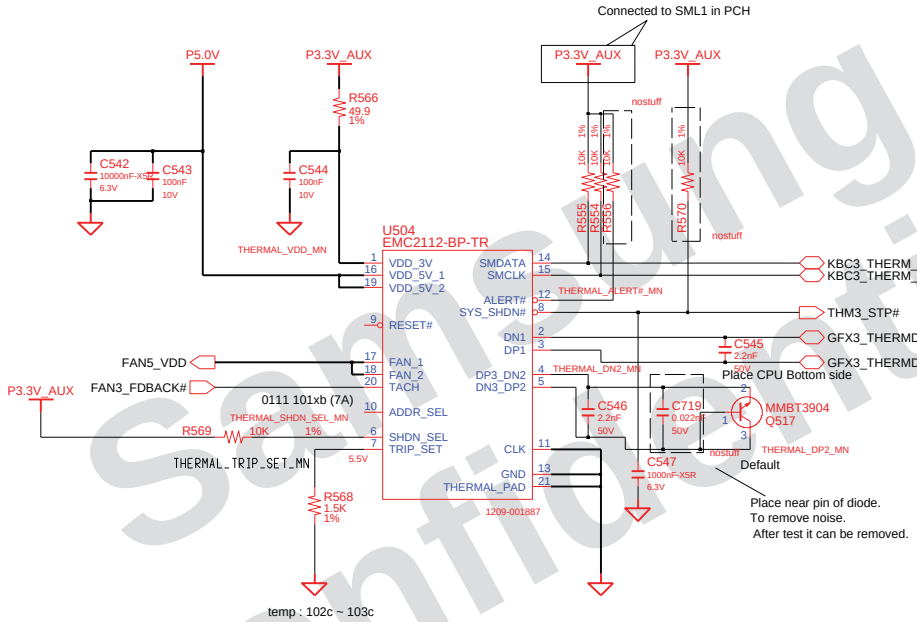

ADDRESSS_SEL MODE	
0	0101 111xb
✓ HIGH Z	0111 101xb (7A)
1	0101 110xb

SHDN_SEL MODE	
0	INTEL TR MODE
HIGH Z	AMD CPU/DIODE MODE
✓ 1	EXT.DIODE 2 MODE

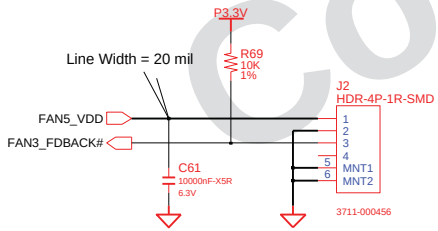

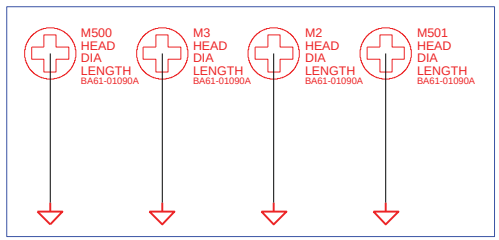

To support heatsink

DESIGN: MS YANG	DATE: 8/11/2009	TITLE: BREMEN-M THERMAL SENSOR THERMAL SENSOR EMC2112	SAMSUNG ELECTRONICS
CHECK: SE LEE	DEV. STEP: PV		
APPROVAL: MK KIM	REV: REV 0.9		PART NO.: BA41-01174A
MODULE CODE	LAST EDIT: October 20, 2009 21:30:55 PM	PAGE 8 OF 56	

Samsung Confidential

SAMSUNG PROPRIETARY
THIS DOCUMENT CONTAINS CONFIDENTIAL PROPRIETARY INFORMATION THAT IS SAMSUNG ELECTRONICS CO'S PROPERTY. DO NOT DISCLOSE TO OR DUPLICATE FOR OTHERS EXCEPT AS AUTHORIZED BY SAMSUNG.

ARRANDALE PROCESSOR (DMI,PEG, FDI)

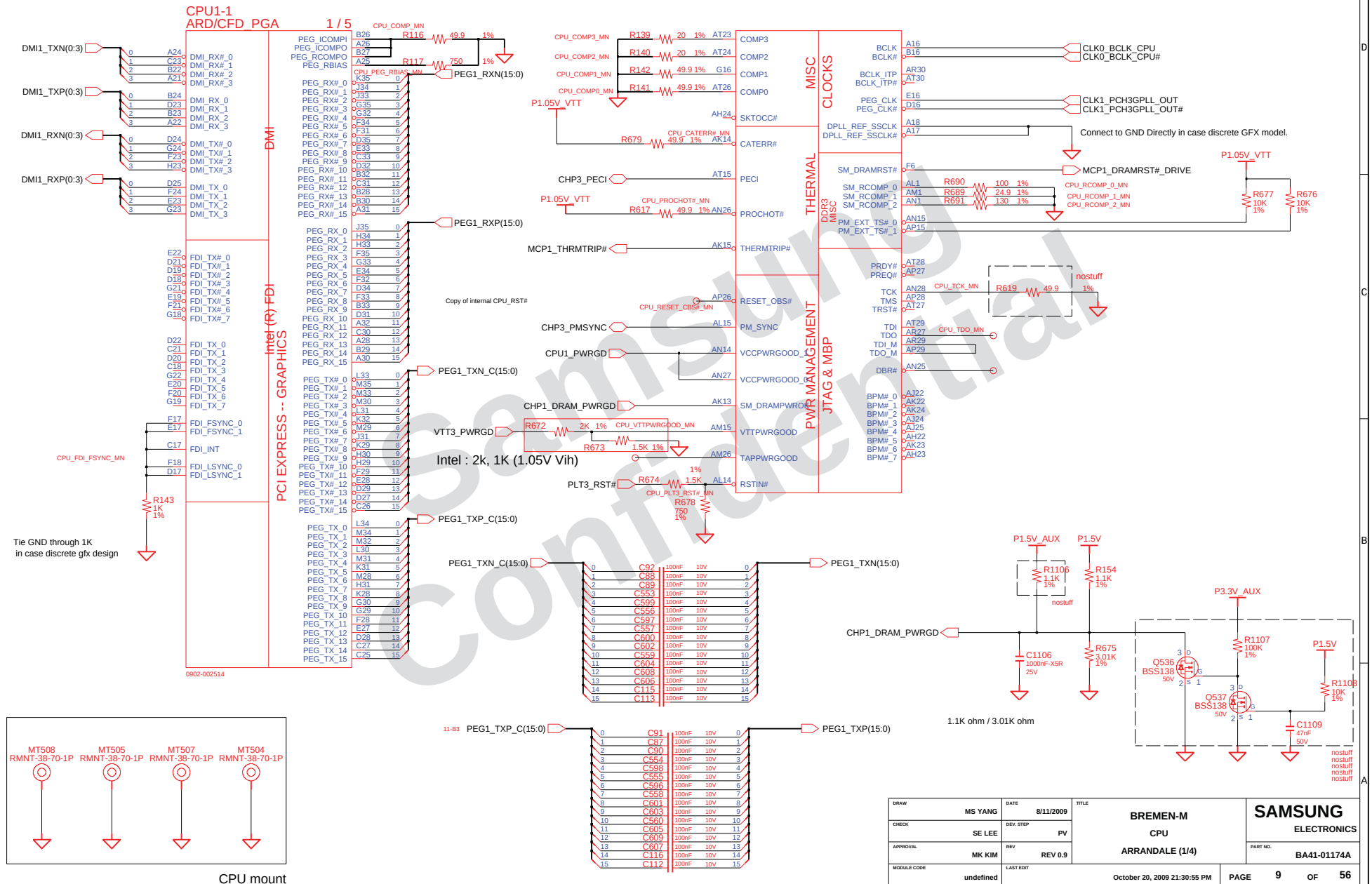

Samsung Confidential

DRAW: MS YANG	DATE: 8/11/2009	TITLE: BREMEN-M CPU ARRANDALE (1/4)	SAMSUNG ELECTRONICS
CHECK: SE LEE	DEV. STEP: PV		PART NO.: BA41-01174A
APPROVAL: MK KIM	REV: REV 0.9		
MODULE CODE: undefined	LAST EDIT: October 20, 2009 21:30:55 PM		PAGE 9 OF 56

SAMSUNG PROPRIETARY
THIS DOCUMENT CONTAINS CONFIDENTIAL PROPRIETARY INFORMATION THAT IS SAMSUNG ELECTRONICS CO'S PROPERTY. DO NOT DISCLOSE TO OR DUPLICATE FOR OTHERS EXCEPT AS AUTHORIZED BY SAMSUNG.

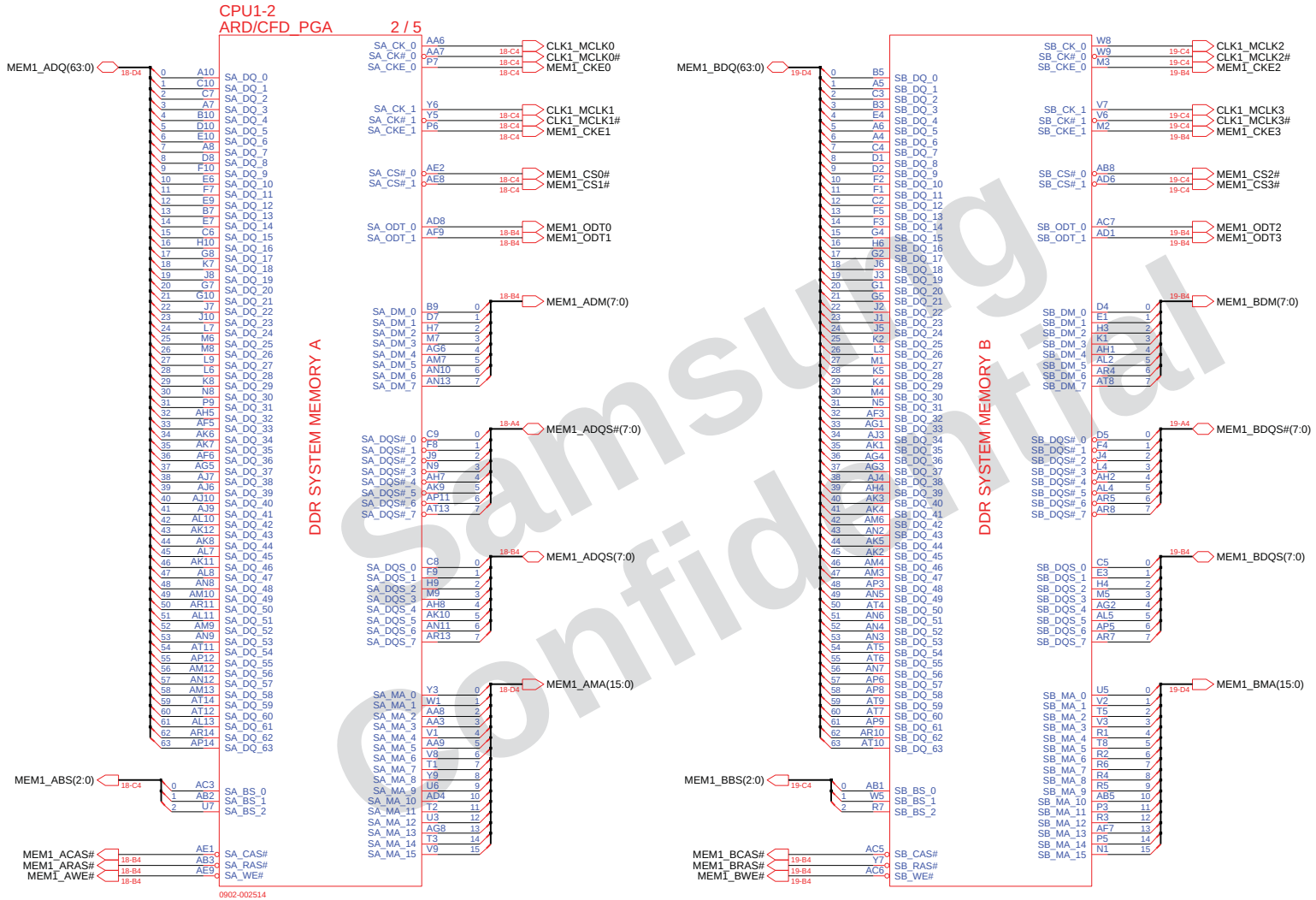

Samsung Confidential

DRAW: MS YANG	DATE: 8/11/2009	TITLE: BREMEN-M CPU ARRANDALE (2/4)	SAMSUNG ELECTRONICS
CHECK: SE LEE	DEV. STEP: PV		PART NO.: BA41-01174A
APPROVAL: MK KIM	REV: REV 0.9		
MODULE CODE: undefined	LAST EDIT: October 20, 2009 21:30:55 PM		PAGE 10 OF 56

SAMSUNG PROPRIETARY
THIS DOCUMENT CONTAINS CONFIDENTIAL PROPRIETARY INFORMATION THAT IS SAMSUNG ELECTRONICS CO'S PROPERTY. DO NOT DISCLOSE TO OR DUPLICATE FOR OTHERS EXCEPT AS AUTHORIZED BY SAMSUNG.

4x 470 uF : CPU VR side

ALL VTT DECAP IS SHARED

CPU_CORE

CPU1-3
ARD/CFD_PGA 3 / 5

P1.05V_VTT

C782 10000nF-X5R 6.3V
C170 10000nF-X5R 6.3V
C168 10000nF-X5R 6.3V
C781 10000nF-X5R 6.3V
C727 10000nF-X5R 6.3V

C154 10000nF-X5R 6.3V
C783 10000nF-X5R 6.3V
C779 10000nF-X5R 6.3V
C780 10000nF-X5R 6.3V
C772 22000nF-X5R 20% 6.3V

nostuff nostuff nostuff nostuff nostuff

C139 22000nF-X5R 20% 6.3V
C145 22000nF-X5R 20% 6.3V
C149 22000nF-X5R 20% 6.3V
C144 22000nF-X5R 20% 6.3V
C148 22000nF-X5R 20% 6.3V
C147 22000nF-X5R 20% 6.3V

C143 22000nF-X5R 20% 6.3V
C142 22000nF-X5R 20% 6.3V
C141 22000nF-X5R 20% 6.3V
C139 22000nF-X5R 20% 6.3V
C140 22000nF-X5R 20% 6.3V
C146 22000nF-X5R 20% 6.3V

nostuff nostuff nostuff nostuff nostuff nostuff

C725 10000nF-X5R 6.3V
C78 10000nF-X5R 6.3V
C85 10000nF-X5R 6.3V
C721 10000nF-X5R 6.3V
C84 10000nF-X5R 6.3V
C723 10000nF-X5R 6.3V

C720 10000nF-X5R 6.3V
C724 10000nF-X5R 6.3V
C722 10000nF-X5R 6.3V
C83 10000nF-X5R 6.3V
C726 10000nF-X5R 6.3V
C86 10000nF-X5R 6.3V

nostuff nostuff nostuff nostuff nostuff nostuff

C82 10000nF-X5R 6.3V
C80 10000nF-X5R 6.3V
C81 10000nF-X5R 6.3V
C79 10000nF-X5R 6.3V

Stuff/NoStuff Check ?

(depends on placement)

CPU CORE SUPPLY

POWER

1.1V RAIL POWER

C773 22000nF-X5R 20% 6.3V
C774 22000nF-X5R 20% 6.3V

CPU VIDS

PSI# — CPU1_PSI#
VID_0, VID_1, VID_2, VID_3, VID_4, VID_5, VID_6 — CPU1_VID(6:0)
PROC_DPRSLPVR — CPU1_DPRSLPVR
VTT_SELECT

VTT_SEL	VOLTAGE	CPU
1	**P1.05V**	**ARRANDALE**
0	P1.1V	CLARKS FIELD

VTT_SEL signal (for CFD/ARD shared)

SENSE LINES

ISENSE — VRM3_IMVP_IMON
VCC_SENSE — CPU1_VCCSENSE
VSS_SENSE — CPU1_VSSSENSE
VTT_SENSE
VSS_SENSE_VTT

CPU_CORE
R577 100 1%
R575 100 1%

0902-002514

CPU1-4
ARD/CFD_PGA 4 / 5

SENSE LINES: VAXG_SENSE, VSSAXG_SENSE

GRAPHICS VIDs: GFX_VID_0, GFX_VID_1, GFX_VID_2, GFX_VID_3, GFX_VID_4, GFX_VID_5, GFX_VID_6

GFX_VR_EN, GFX_DPRSLPVR, GFX_IMON

R618 1% 1K — CPU_GFX_IMON_MN

ADD 1K PD in discrete GFX design

P1.5V_AUX, P1.5V

R701 0, R703 0, R702 0, R723 0, R690 0 (nostuff)

GRAPHICS

DDR3 - 1.5V RAILS

C792 22000nF-X5R 20% 6.3V
C813 22000nF-X5R 20% 6.3V
C797 1000nF-X5R 6.3V
C795 1000nF-X5R 6.3V
C793 1000nF-X5R 6.3V
C796 1000nF-X5R 6.3V
C794 1000nF-X5R 6.3V
C791 100nF 10V

P1.05V_VTT

C778 22000nF-X5R 20% 6.3V
C777 22000nF-X5R 20% 6.3V
C776 22000nF-X5R 20% 6.3V

2A ROUTING NEEDED.

FDI

PEG & DMI

1.1V

C775 22000nF-X5R 20% 6.3V
C169 10000nF-X5R 6.3V

1.8V

P1.8V

C114 1000nF-X5R 6.3V
C150 1000nF-X5R 6.3V
C152 2200nF-X5R 10V
C151 4700nF-X5R 10V
C153 22000nF-X5R 20% 6.3V

0902-002514

Samsung Confidential

DESIGN: MS YANG	DATE: 8/11/2009	TITLE: BREMEN-M CPU ARRANDALE (3/4)	SAMSUNG ELECTRONICS
CHECK: SE LEE	DEV. STEP: PV		
APPROVAL: MK KIM	REV: REV 0.9		PART NO. BA41-01174A
MODULE CODE	LAST EDIT: October 20, 2009 21:30:55 PM		PAGE 11 OF 56

SAMSUNG PROPRIETARY
THIS DOCUMENT CONTAINS CONFIDENTIAL PROPRIETARY INFORMATION THAT IS SAMSUNG ELECTRONICS CO'S PROPERTY. DO NOT DISCLOSE TO OR DUPLICATE FOR OTHERS EXCEPT AS AUTHORIZED BY SAMSUNG.

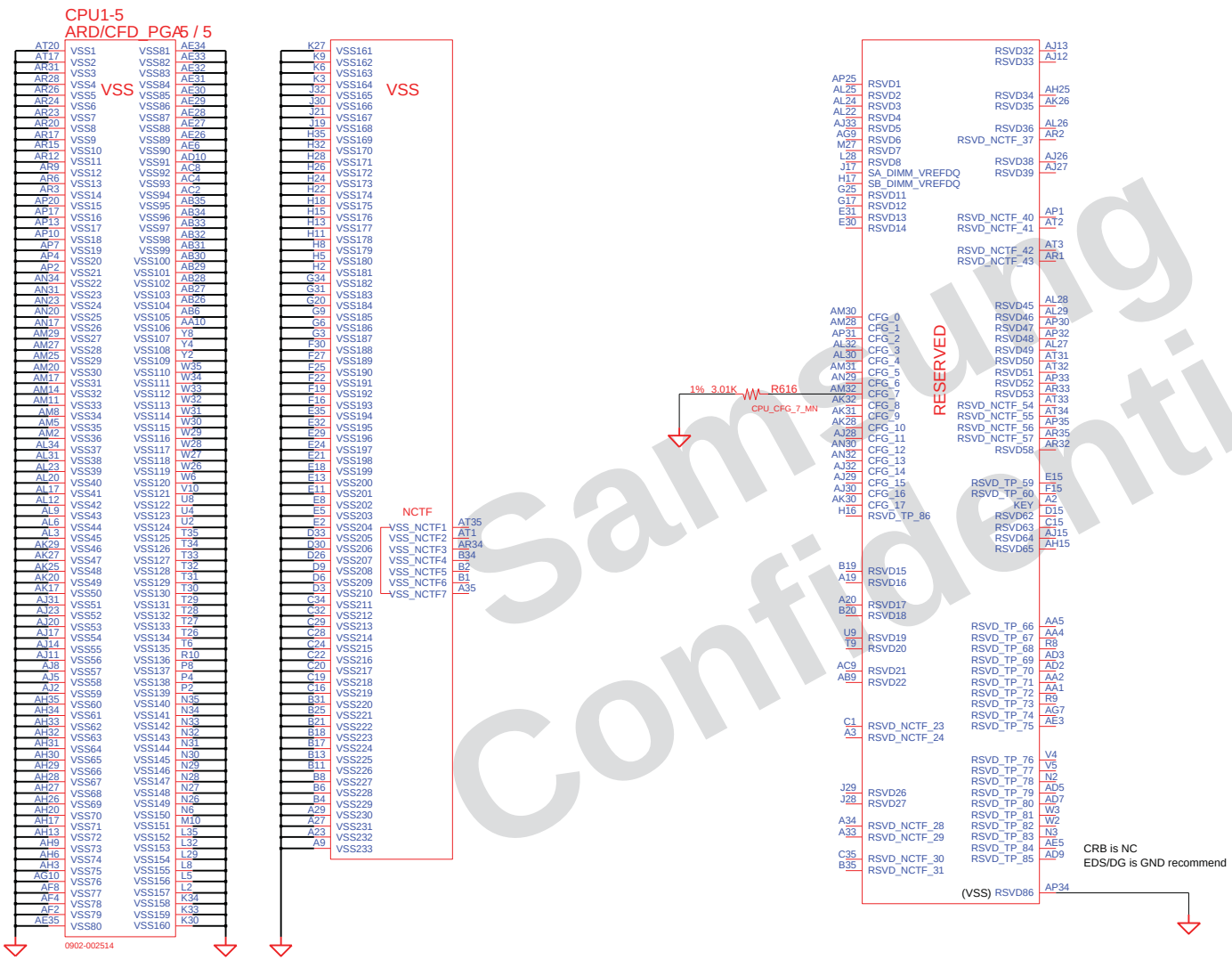

CFG Straps for Processor

PCI Express Configuration Select	
CFG0	1 : Single PEG 0 : Bifunction enabled

PCI Express Static Lane Reversal	
CFG3	1 : Normal operation 0 : Lane Reversed

Display Port Presence	
CFG4	1 : Disabled - No DP device is connected to eDP 0 : Enabled - (DP device is connected to eDP

PCIE 2.O SUPPORT	
CFG7	1 : Normal operation 0 : PCIE2.0 Jitter support

Samsung Confidential

DRAW: MS YANG	DATE: 8/11/2009	TITLE: BREMEN-M CPU ARRANDALE (4/4)	SAMSUNG ELECTRONICS
CHECK: SE LEE	DEV. STEP: PV		
APPROVAL: MK KIM	REV: REV 0.9		PART NO.: BA41-01174A
MODULE CODE: undefined	LAST EDIT: October 20, 2009 21:30:55 PM		PAGE 12 OF 56

SAMSUNG PROPRIETARY
THIS DOCUMENT CONTAINS CONFIDENTIAL PROPRIETARY INFORMATION THAT IS SAMSUNG ELECTRONICS CO'S PROPERTY. DO NOT DISCLOSE TO OR DUPLICATE FOR OTHERS EXCEPT AS AUTHORIZED BY SAMSUNG.

DDR SO-DIMM #0

Height : 4 mm (STANDARD)

P/N : 3709-001532 (Molex)
P/N : 3709-001560 (Foxconn)

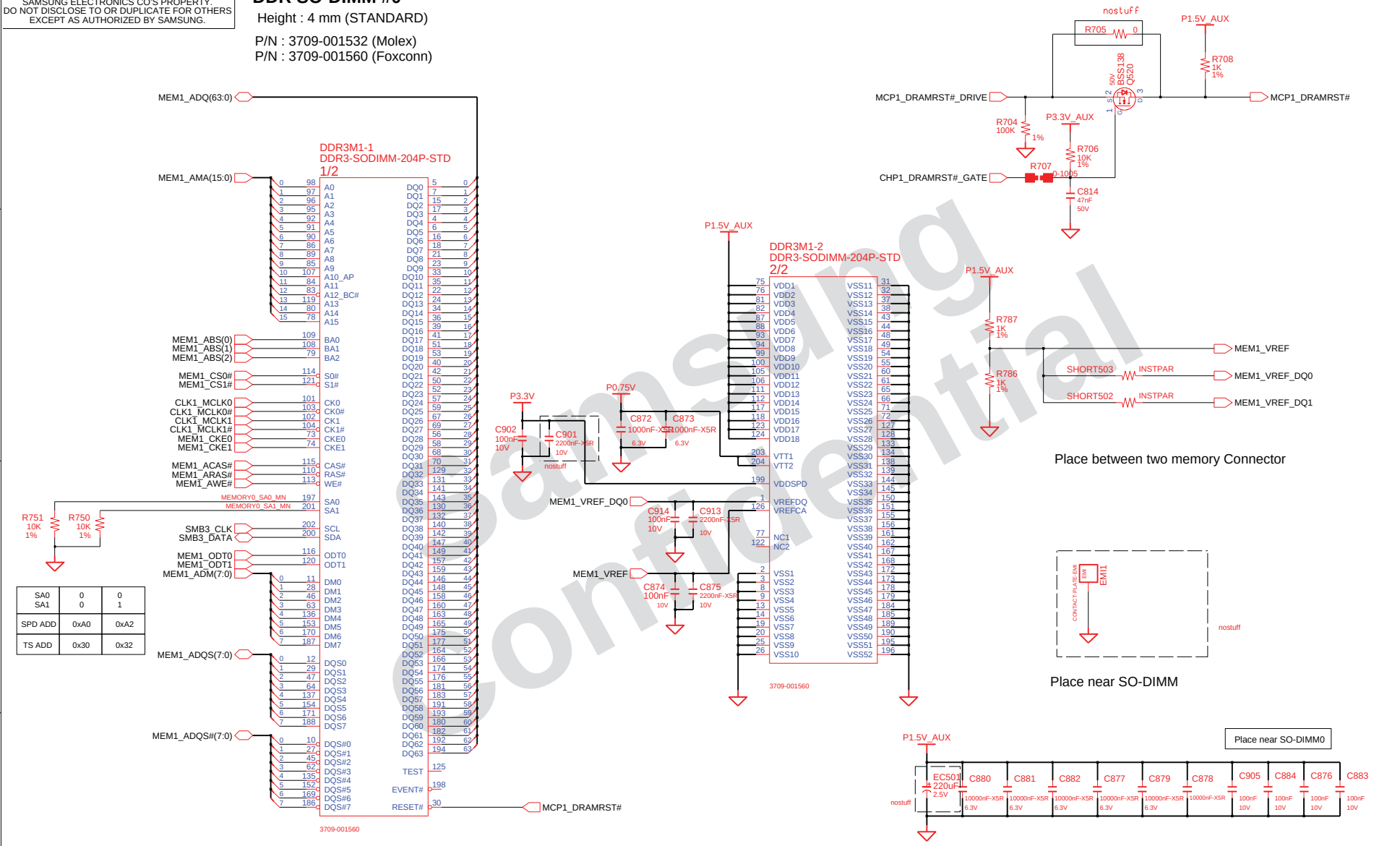

SA0	0	0
SA1	0	1
SPD ADD	0xA0	0xA2
TS ADD	0x30	0x32

Samsung Confidential

DRAW: MS YANG	DATE: 8/11/2009	TITLE: BREMEN-M SODIMM A DDR3	SAMSUNG ELECTRONICS
CHECK: SE LEE	DEV. STEP: PV		PART NO. BA41-01174A
APPROVAL: MK KIM	REV: REV 0.9		
MODULE CODE	LAST EDIT: October 20, 2009 21:30:55 PM	PAGE 13 OF 56	

SAMSUNG PROPRIETARY
THIS DOCUMENT CONTAINS CONFIDENTIAL PROPRIETARY INFORMATION THAT IS SAMSUNG ELECTRONICS CO'S PROPERTY. DO NOT DISCLOSE TO OR DUPLICATE FOR OTHERS EXCEPT AS AUTHORIZED BY SAMSUNG.

DDR SO-DIMM #1

Height : 4 mm (REVERSE)

P/N : 3709-001533 (Molex)
P/N : 3709-001559 (Foxconn)

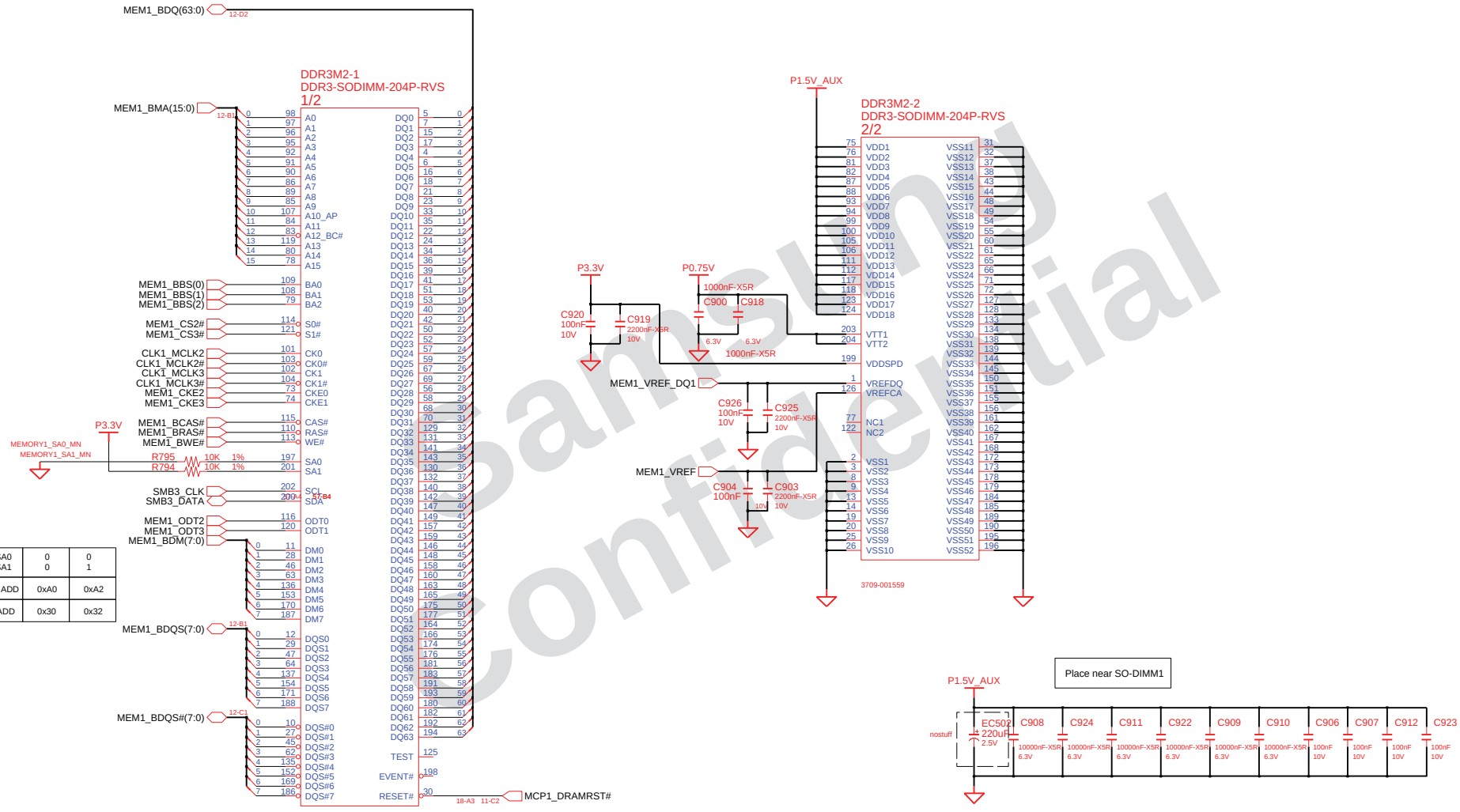

SA0 SA1	0 0	0 1
SPD ADD	0xA0	0xA2
TS ADD	0x30	0x32

Samsung Confidential

DRAW: MS YANG	DATE: 8/11/2009	TITLE: BREMEN-M SODIMM B DDR3	SAMSUNG ELECTRONICS
CHECK: SE LEE	DEV. STEP: PV		PART NO. BA41-01174A
APPROVAL: MK KIM	REV: REV 0.9		
MODULE CODE	LAST EDIT: October 20, 2009 21:30:55 PM	PAGE 14 OF 56	

SAMSUNG PROPRIETARY
THIS DOCUMENT CONTAINS CONFIDENTIAL PROPRIETARY INFORMATION THAT IS SAMSUNG ELECTRONICS CO'S PROPERTY. DO NOT DISCLOSE TO OR DUPLICATE FOR OTHERS EXCEPT AS AUTHORIZED BY SAMSUNG.

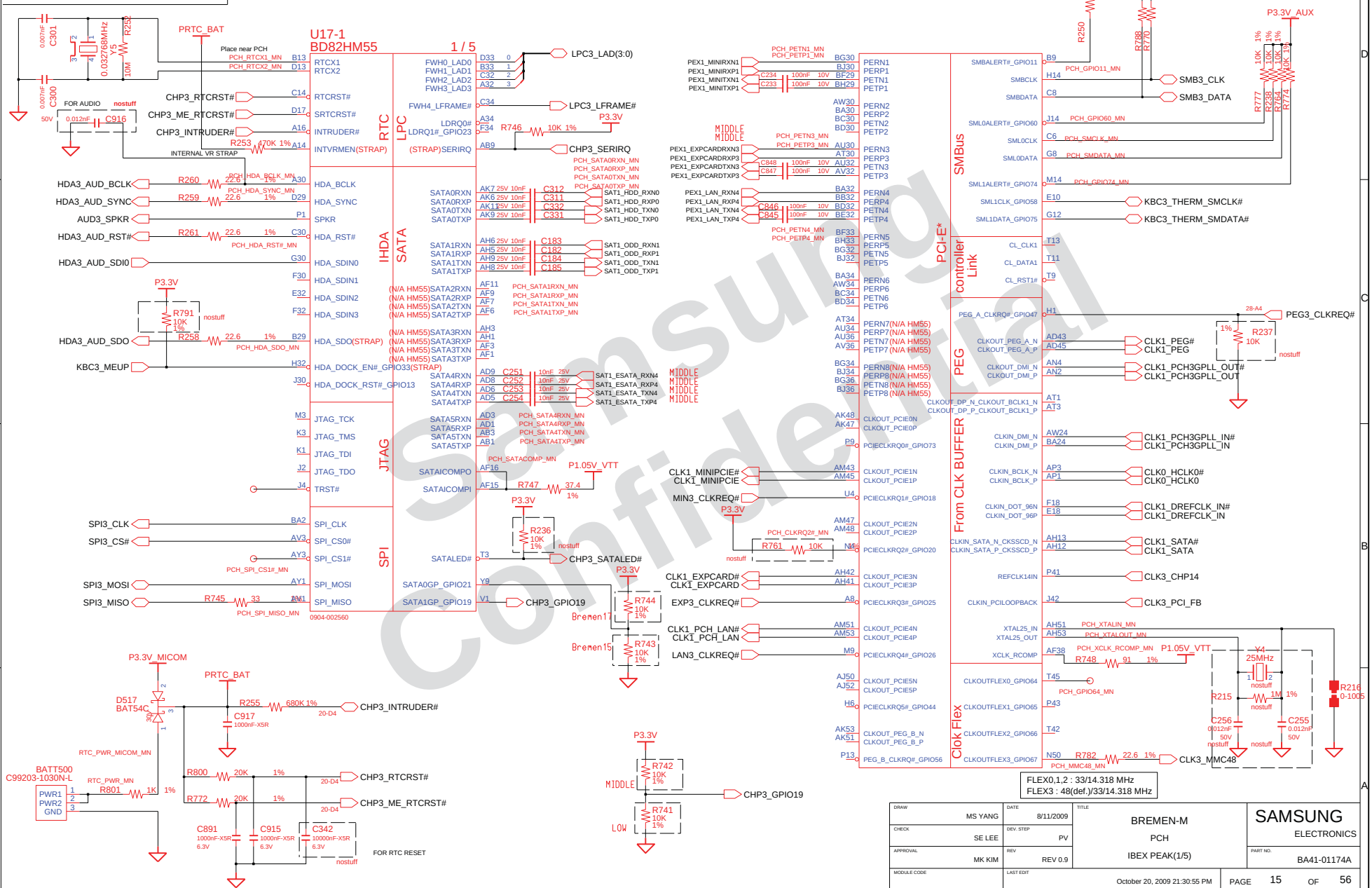

DRAW: MS YANG	DATE: 8/11/2009	TITLE: BREMEN-M PCH IBEX PEAK(1/5)	SAMSUNG ELECTRONICS
CHECK: SE LEE	DEV. STEP: PV		PART NO. BA41-01174A
APPROVAL: MK KIM	REV: REV 0.9		
MODULE CODE	LAST EDIT: October 20, 2009 21:30:55 PM	PAGE 15 OF 56	

SAMSUNG PROPRIETARY
THIS DOCUMENT CONTAINS CONFIDENTIAL PROPRIETARY INFORMATION THAT IS SAMSUNG ELECTRONICS CO'S PROPERTY. DO NOT DISCLOSE TO OR DUPLICATE FOR OTHERS EXCEPT AS AUTHORIZED BY SAMSUNG.

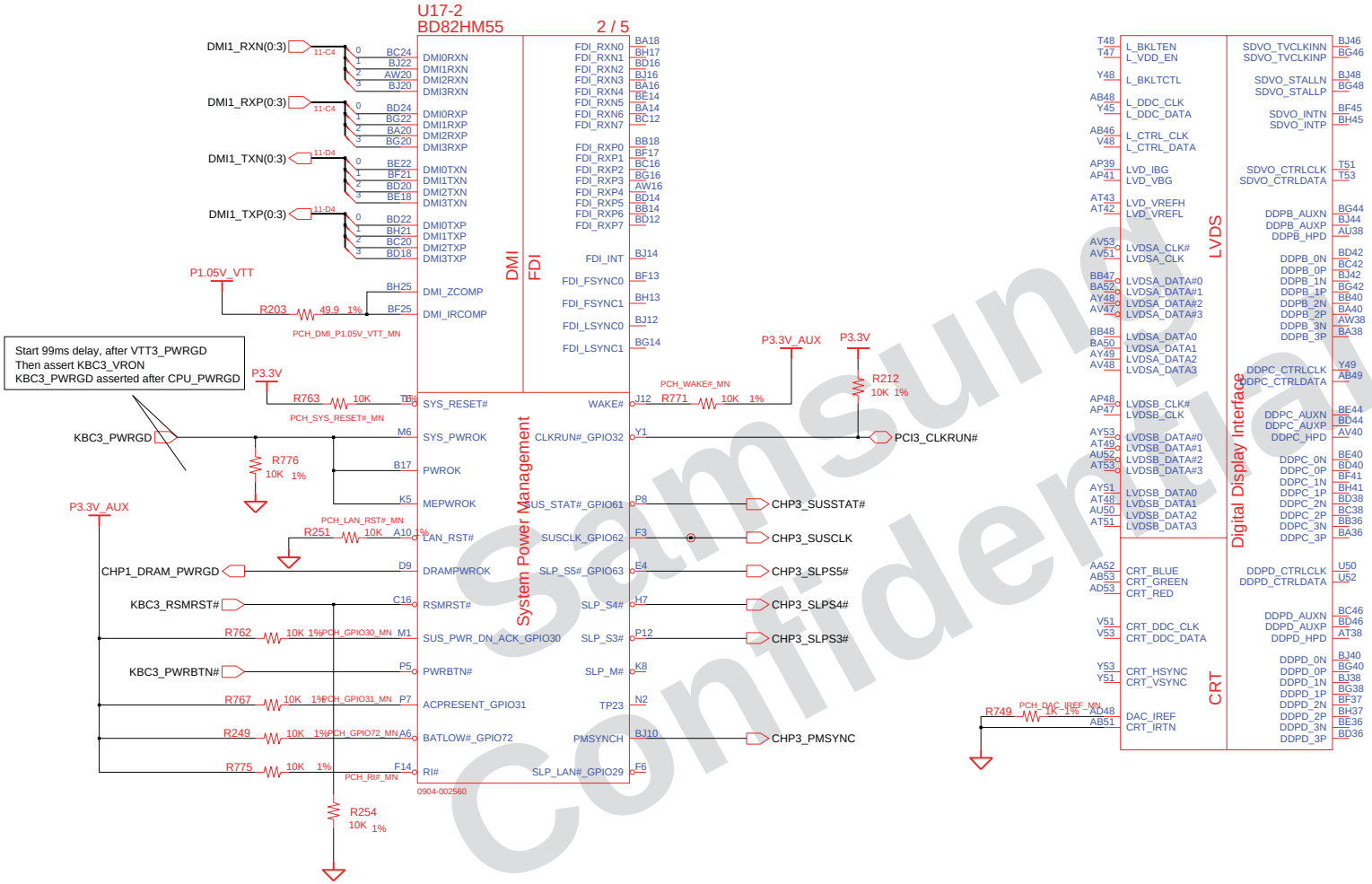

Samsung Confidential

DRAW: MS YANG	DATE: 8/11/2009	TITLE: BREMEN-M PCH IBEX PEAK(2/5)	SAMSUNG ELECTRONICS
CHECK: SE LEE	DEV. STEP: PV		PART NO. BA41-01174A
APPROVAL: MK KIM	REV: REV 0.9		
MODULE CODE	LAST EDIT: October 20, 2009 21:30:55 PM		PAGE 16 OF 56

SAMSUNG PROPRIETARY
THIS DOCUMENT CONTAINS CONFIDENTIAL PROPRIETARY INFORMATION THAT IS SAMSUNG ELECTRONICS CO'S PROPERTY. DO NOT DISCLOSE TO OR DUPLICATE FOR OTHERS EXCEPT AS AUTHORIZED BY SAMSUNG.

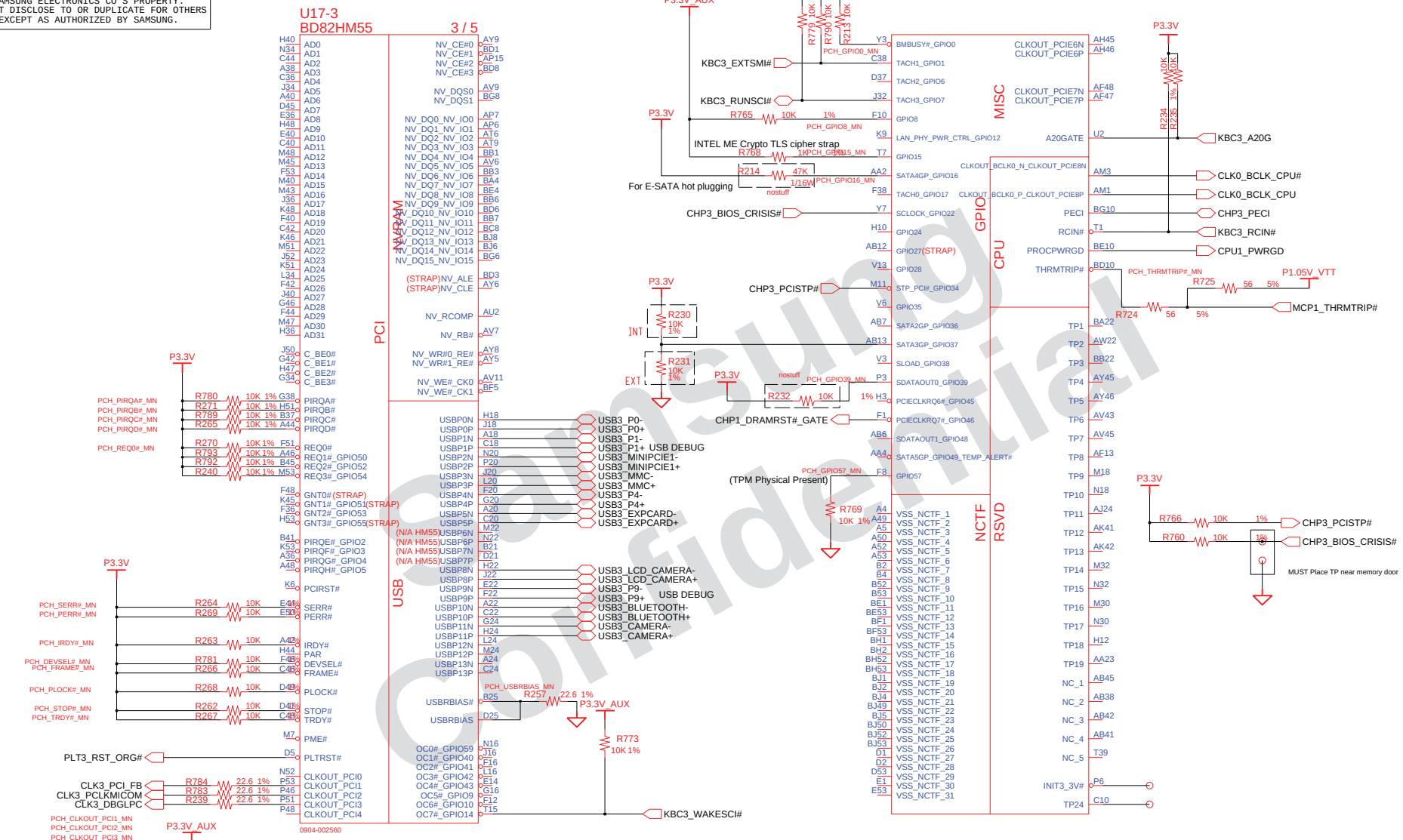

DRAW: MS YANG	DATE: 8/11/2009	TITLE: BREMEN-M PCH IBEX PEAK(3/5)	SAMSUNG ELECTRONICS
CHECK: SE LEE	DEV. STEP: PV		PART NO. BA41-01174A
APPROVAL: MK KIM	REV: REV 0.9		
MODULE CODE	LAST EDIT: October 20, 2009 21:30:55 PM		PAGE 17 OF 56

SAMSUNG PROPRIETARY
THIS DOCUMENT CONTAINS CONFIDENTIAL PROPRIETARY INFORMATION THAT IS SAMSUNG ELECTRONICS CO'S PROPERTY. DO NOT DISCLOSE TO OR DUPLICATE FOR OTHERS EXCEPT AS AUTHORIZED BY SAMSUNG.

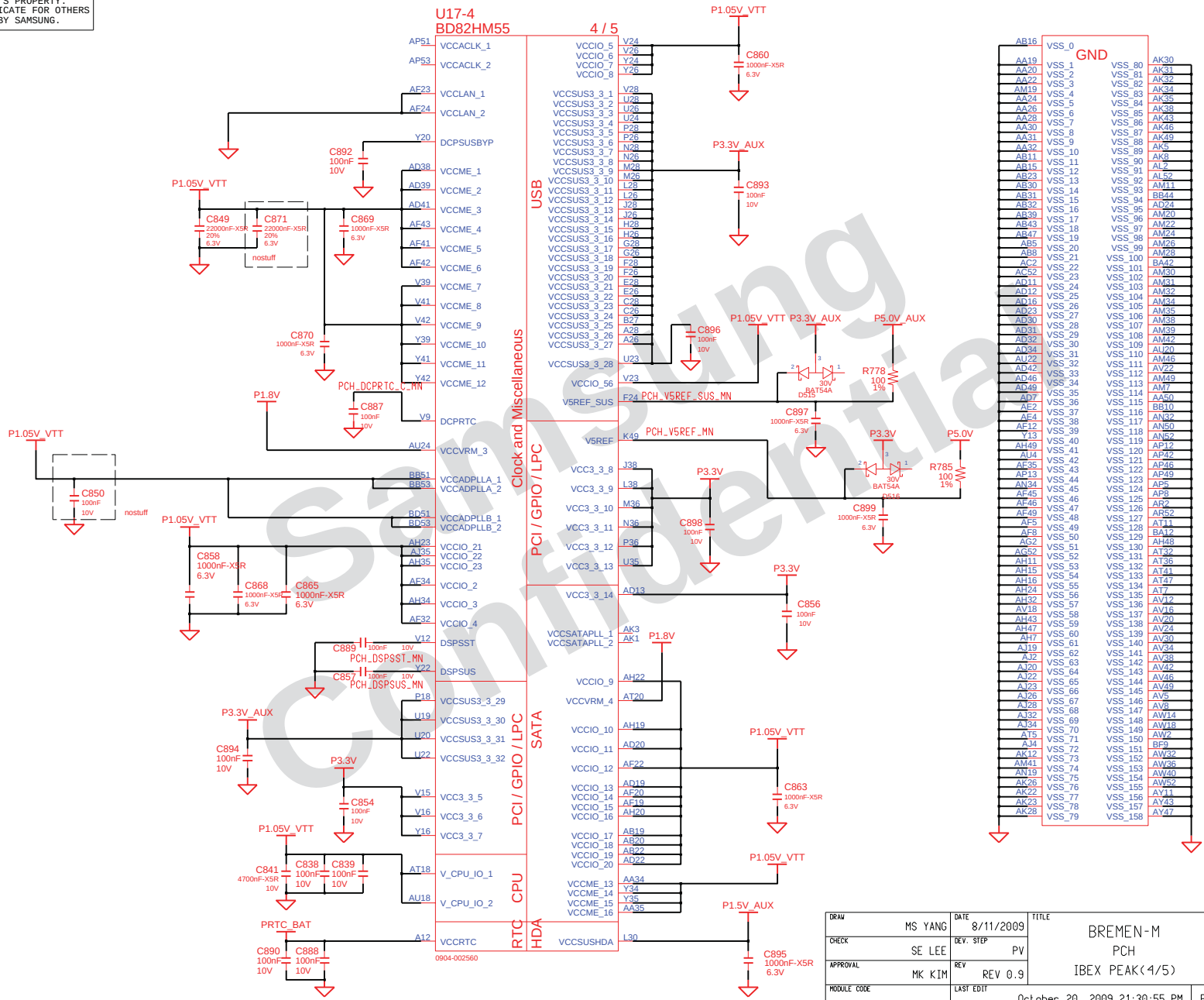

DRAW: MS YANG	DATE: 8/11/2009	TITLE: BREMEN-M PCH IBEX PEAK(4/5)	SAMSUNG ELECTRONICS
CHECK: SE LEE	DEV. STEP: PV		PART NO. BA41-01174A
APPROVAL: MK KIM	REV: REV 0.9		
MODULE CODE	LAST EDIT: October 20, 2009 21:30:55 PM	PAGE 18 OF 66	

SAMSUNG PROPRIETARY
THIS DOCUMENT CONTAINS CONFIDENTIAL PROPRIETARY INFORMATION THAT IS SAMSUNG ELECTRONICS CO'S PROPERTY. DO NOT DISCLOSE TO OR DUPLICATE FOR OTHERS EXCEPT AS AUTHORIZED BY SAMSUNG.

This power share with thermal sensor

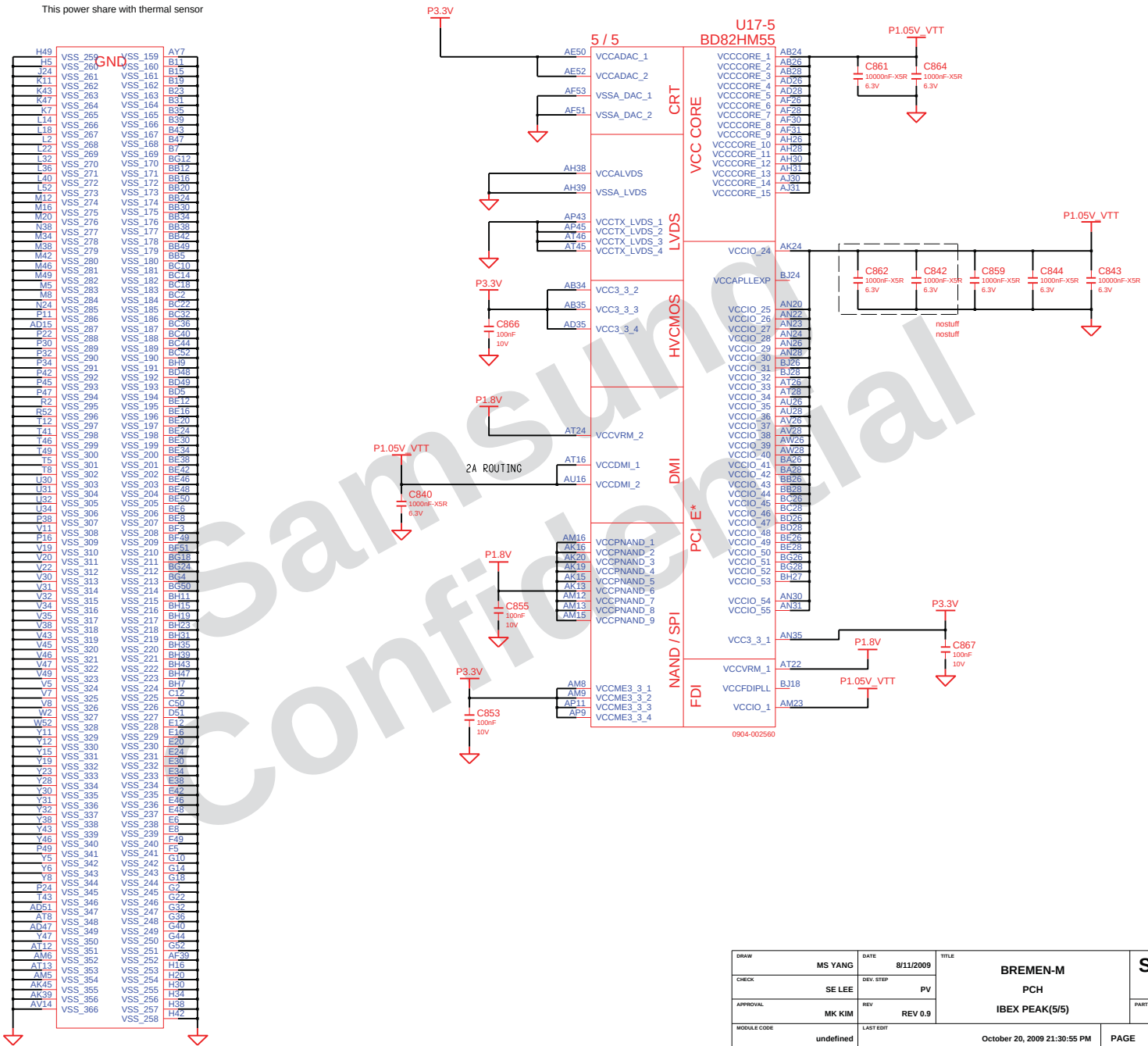

Samsung Confidential

DRAW: MS YANG	DATE: 8/11/2009	TITLE: BREMEN-M PCH IBEX PEAK(5/5)	SAMSUNG ELECTRONICS
CHECK: SE LEE	DEV. STEP: PV		PART NO.: BA41-01174A
APPROVAL: MK KIM	REV: REV 0.9		
MODULE CODE: undefined	LAST EDIT: October 20, 2009 21:30:55 PM		PAGE 19 OF 56

SAMSUNG PROPRIETARY
THIS DOCUMENT CONTAINS CONFIDENTIAL PROPRIETARY INFORMATION THAT IS SAMSUNG ELECTRONICS CO'S PROPERTY. DO NOT DISCLOSE TO OR DUPLICATE FOR OTHERS EXCEPT AS AUTHORIZED BY SAMSUNG.

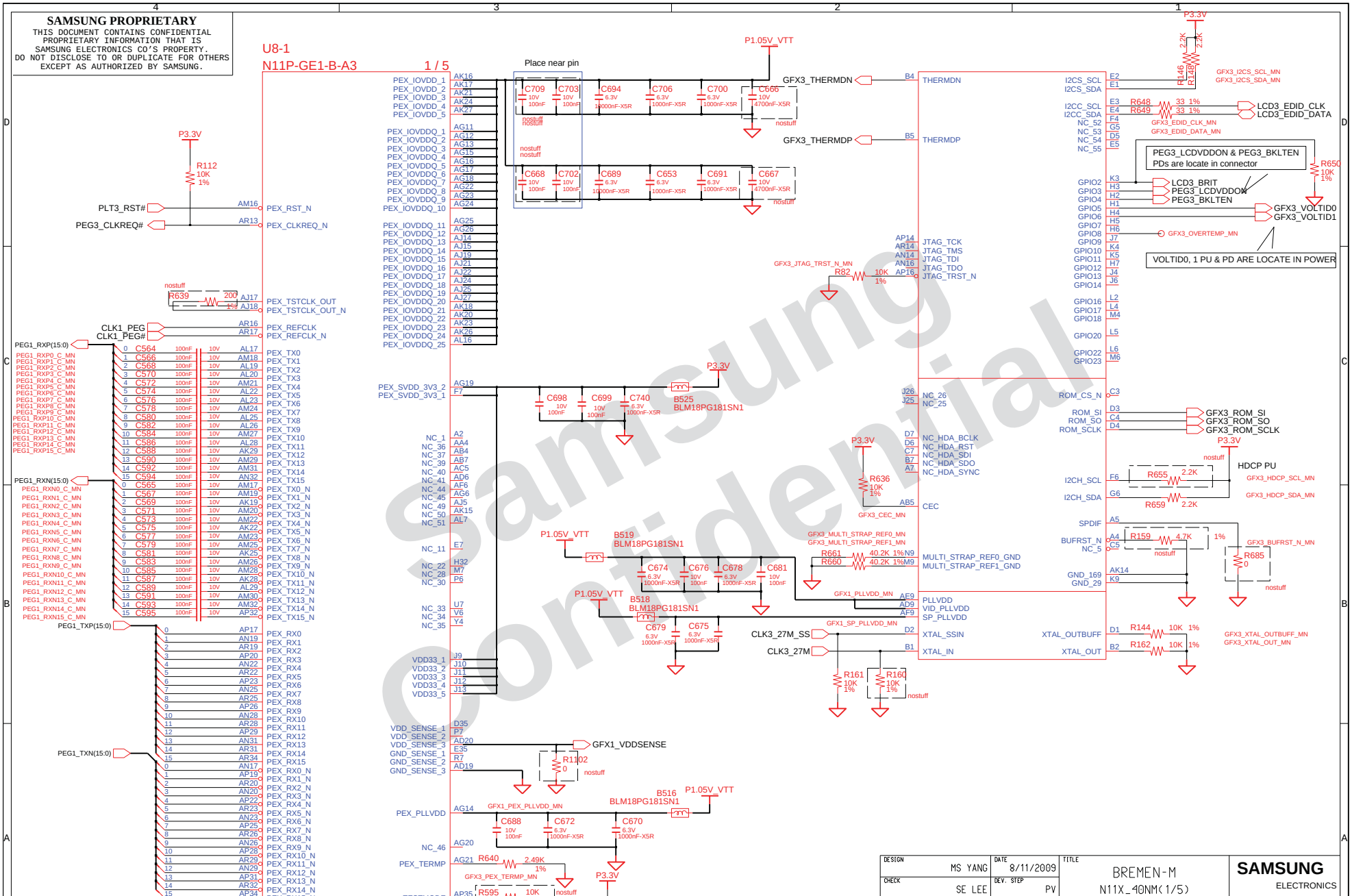

DESIGN: MS YANG	DATE: 8/11/2009	TITLE: BREMEN-M N11X_40NM(1/5) N11X_40NM(1/5)	SAMSUNG ELECTRONICS
CHECK: SE LEE	DEV. STEP: PV		
APPROVAL: MK KIM	REV: REV 0.9		PART NO. BA41-01174A
MODULE CODE	LAST EDIT: October 20, 2009 21:30:55 PM		PAGE 20 OF 56

SAMSUNG PROPRIETARY
THIS DOCUMENT CONTAINS CONFIDENTIAL PROPRIETARY INFORMATION THAT IS SAMSUNG ELECTRONICS CO'S PROPERTY. DO NOT DISCLOSE TO OR DUPLICATE FOR OTHERS EXCEPT AS AUTHORIZED BY SAMSUNG.

U8-2
N11P-GE1-B-A3 2 / 5

PEG1_DQA(63:0)
PEG1_DQC(63:0)
PEG1_DQMA(7:0)
PEG1_DQMC(7:0)
PEG1_WDQSA(0:7)
PEG1_WDQSC(0:7)
PEG1_RDQSA(0:7)
PEG1_RDQSC(0:7)

FB_DQS_WP must be connected to DQSU/DQSL @ gDDR3 component
FB_DQS_RN must be connected to DQSU#/DQSL# @ gDDR3 component

P1.5V
P1.05V_VTT

C760 10nF, C761 10V 10nF, C756 4.7nF 25V, C754 4.7nF 25V, C745 100nF 10V, C744 100nF 10V, C757 10V 4700nF-X5R
nostuff nostuff nostuff nostuff

C807 1nF 50V, C211 1nF 50V, C196 1nF 50V, C134 1nF 50V, C161 1nF 50V, C764 1nF 50V
For EMI

C711 4.7nF 25V, C707 4.7nF 25V, C758 100nF 10V, C710 100nF 10V, C759 10V 4700nF-X5R
nostuff nostuff

CMD MODE A

PEG1_CKEC1, PEG1_MAC(9), PEG1_MABC(2), PEG1_MAC(12), PEG1_MAC(10), PEG1_MABC(3), PEG1_MAC(13), PEG1_BAC1, PEG1_RASC#, PEG1_CASC#, PEG1_MAC(6), PEG1_MABC(4), PEG1_MAC(2), PEG1_CKEC0, PEG1_CSC00#, PEG1_ODTC0, PEG1_MAC(4), PEG1_MAC(7), PEG1_BAC0, PEG1_MAC(11), PEG1_MABC(5), PEG1_MAC(5), PEG1_WEC#, PEG1_MAC(8), PEG1_DRAMRST_C#, PEG1_MAC(3), PEG1_CSC10#, PEG1_MAC(0), PEG1_MAC(1), PEG1_BAC2, PEG1_ODTC1

PEG1_CKEA1, PEG1_MAA(9), PEG1_MABA(2), PEG1_MAA(12), PEG1_MAA(10), PEG1_MABA(3), PEG1_MAA(13), PEG1_BAA1, PEG1_RASA#, PEG1_CASA#, PEG1_MAA(6), PEG1_MABA(4), PEG1_MAA(2), PEG1_CKEA0, PEG1_CSA00#, PEG1_ODTA0, PEG1_MAA(4), PEG1_MAA(7), PEG1_BAA0, PEG1_MAA(11), PEG1_MABA(5), PEG1_MAA(5), PEG1_WEA#, PEG1_MAA(8), PEG1_DRAMRST_A#, PEG1_MAA(3), PEG1_CSA10#, PEG1_MAA(0), PEG1_MAA(1), PEG1_BAA2, PEG1_ODTA1

PEG1_CLKA0, PEG1_CLKA0#, PEG1_CLKA1, PEG1_CLKA1#

PEG1_CLKC0, PEG1_CLKC0#, PEG1_CLKC1, PEG1_CLKC1#

GFX1_FBC_DEBUG_MN
R662 60.4 1%

GFX1_FBA_DEBUG_MN
R641 60.4 1%

GFX3_NC_FBAC_PLLAVDD1_MN
C750 100nF 10V, C747 100nF 10V
nostuff nostuff

R664 40.2 1%, R663 40.2 1%, R666 40.2 1%
N11P
R665 60.4 1%
N11M
GFX1_FB_CAL_PD_VDDQ_MN
GFX3_FB_CAL_PD_VDDQ_MN
GFX3_FB_CAL_TERM_GND_MN

GFX1_FB_PLLAVDD_MN
B520 BLM18PG181SN1
C708 4700nF-X5R 10V, C712 100nF 10V

N1X MEMORY TERMI	N11P, gDDR3	N11M, gDDR3
FB_CAL_PD_VDDQ	40.2 ohm	40.2 ohm
FB_CAL_PU_GND	40.2 ohm	40.2 ohm
FB_CAL_TERM_GND	40.2 ohm	60.4 ohm

0904-002552

DESIGN: MS YANG	DATE: 8/11/2009	TITLE: BREMEN-M N11X_40NM(2/5) N11X_40NM(2/5)	SAMSUNG ELECTRONICS
CHECK: SE LEE	DEV. STEP: PV		
APPROVAL: MK KIM	REV: REV 0.9		PART NO. BA41-01174A
MODULE CODE	LAST EDIT: October 20, 2009 21:30:55 PM		PAGE 21 OF 56

Samsung Confidential

SAMSUNG PROPRIETARY
THIS DOCUMENT CONTAINS CONFIDENTIAL PROPRIETARY INFORMATION THAT IS SAMSUNG ELECTRONICS CO'S PROPERTY. DO NOT DISCLOSE TO OR DUPLICATE FOR OTHERS EXCEPT AS AUTHORIZED BY SAMSUNG.

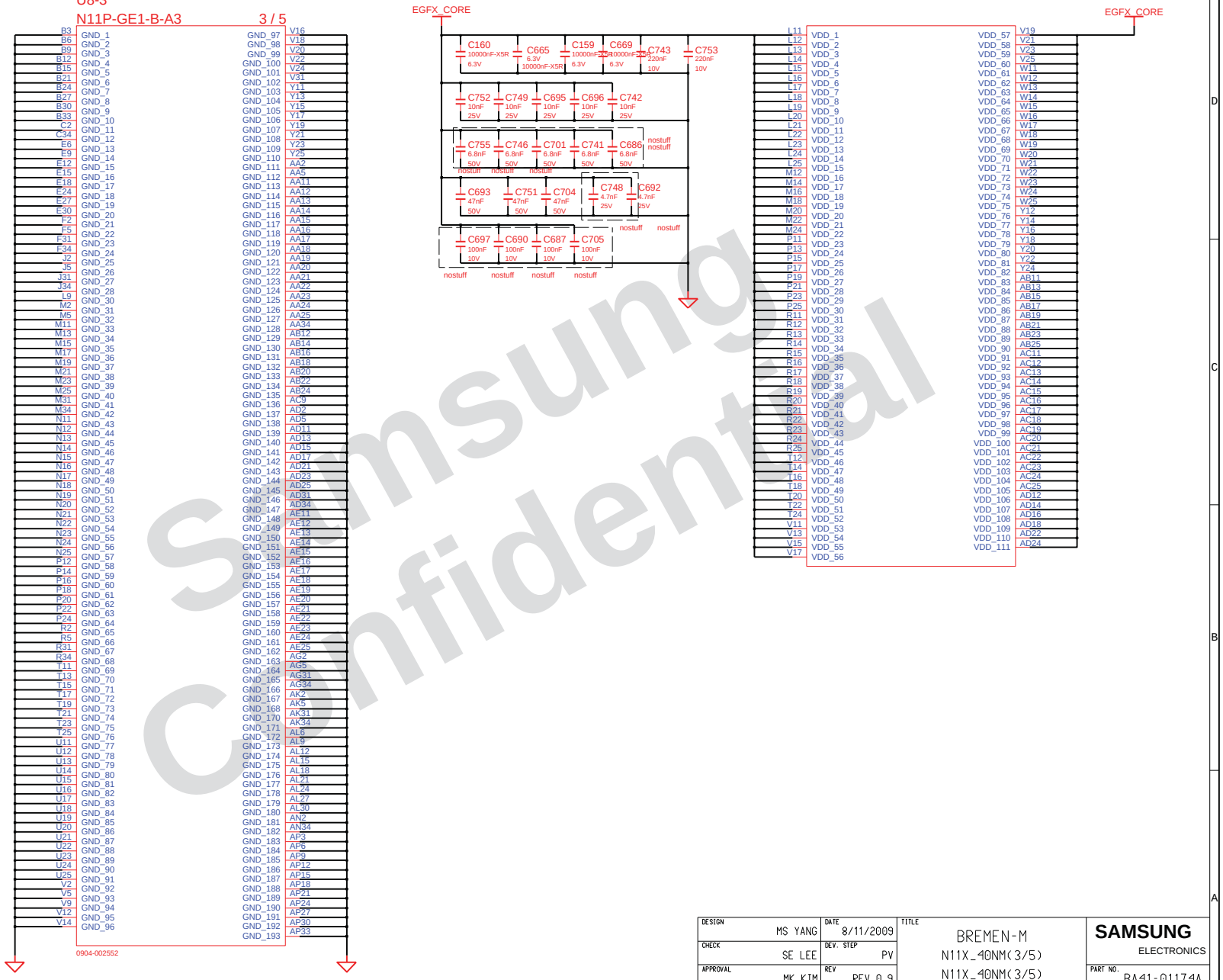

Samsung Confidential

DESIGN	MS YANG	DATE	8/11/2009	TITLE	BREMEN-M N11X_40NM(3/5) N11X_40NM(3/5)	SAMSUNG ELECTRONICS
CHECK	SE LEE	DEV. STEP	PV			
APPROVAL	MK KIM	REV	REV 0.9			PART NO. BA41-01174A
MODULE CODE		LAST EDIT	October 20, 2009 21:30:55 PM	PAGE 22 OF 56		

SAMSUNG PROPRIETARY
THIS DOCUMENT CONTAINS CONFIDENTIAL PROPRIETARY INFORMATION THAT IS SAMSUNG ELECTRONICS CO'S PROPERTY. DO NOT DISCLOSE TO OR DUPLICATE FOR OTHERS EXCEPT AS AUTHORIZED BY SAMSUNG.

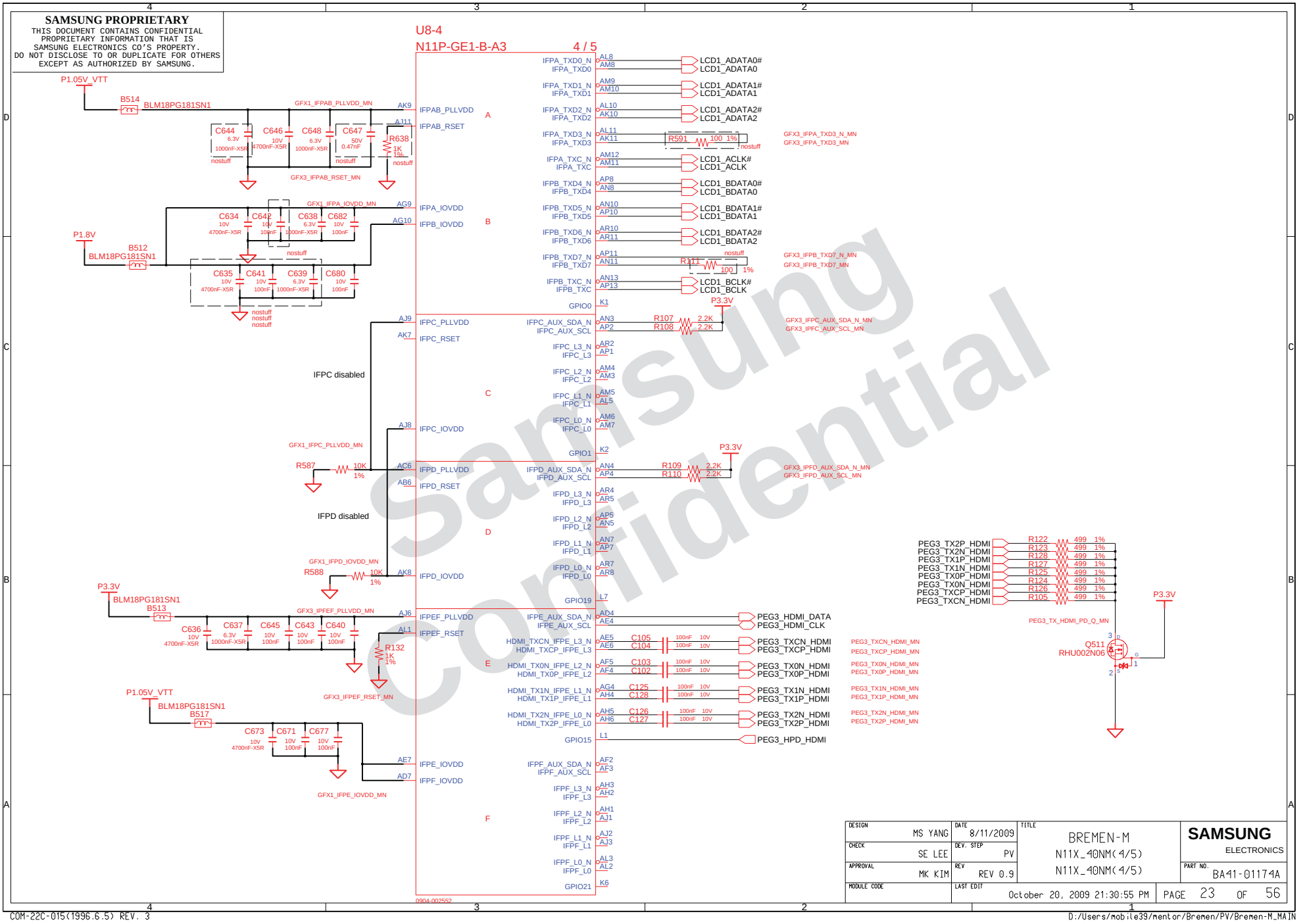

Samsung Confidential

SAMSUNG PROPRIETARY
THIS DOCUMENT CONTAINS CONFIDENTIAL PROPRIETARY INFORMATION THAT IS SAMSUNG ELECTRONICS CO'S PROPERTY. DO NOT DISCLOSE TO OR DUPLICATE FOR OTHERS EXCEPT AS AUTHORIZED BY SAMSUNG.

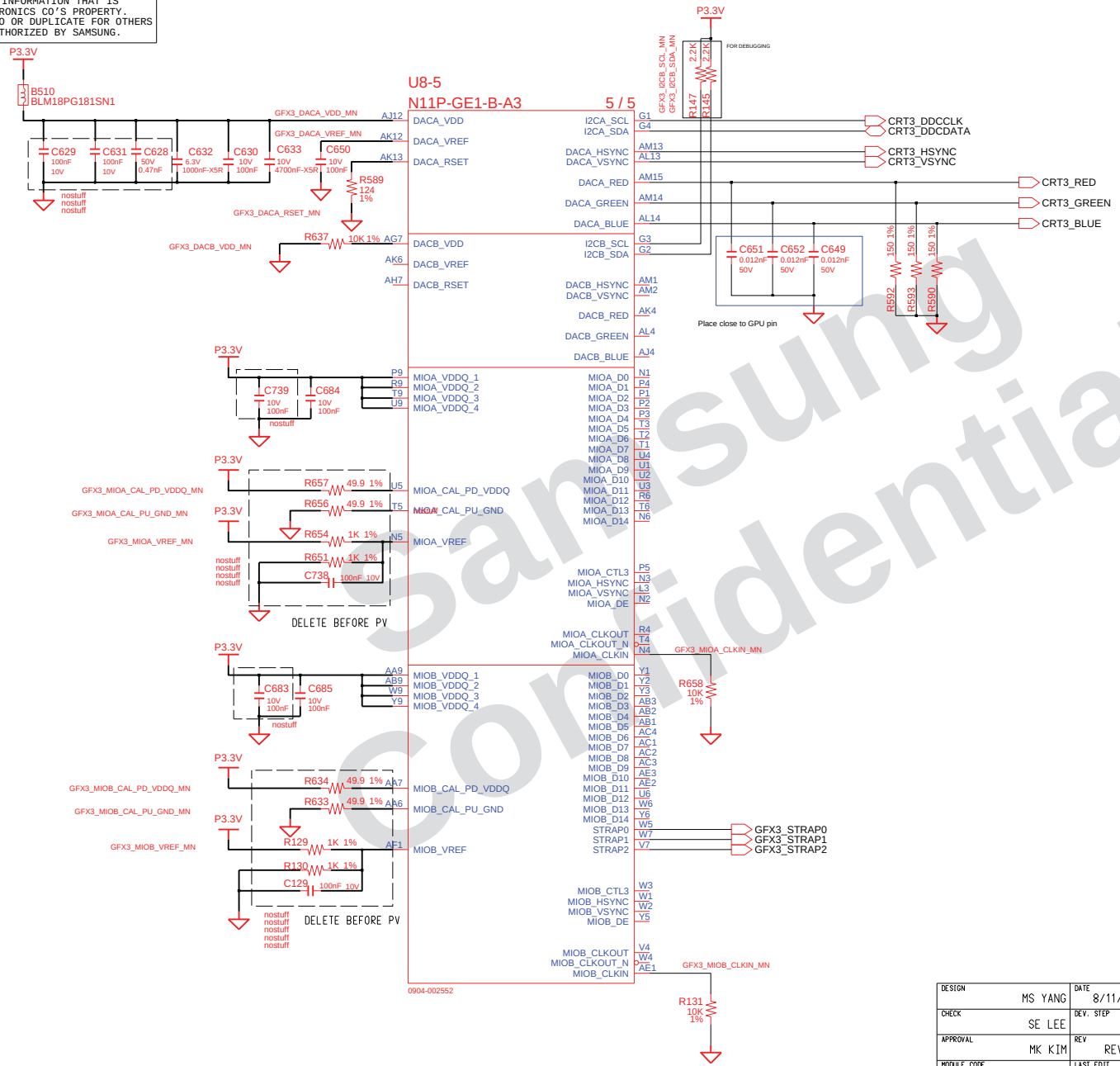

DESIGN: MS YANG	DATE: 8/11/2009	TITLE: BREMEN-M N11X_40NM(5/5) N11X_40NM(5/5)	SAMSUNG ELECTRONICS
CHECK: SE LEE	DEV. STEP: PV		
APPROVAL: MK KIM	REV: REV 0.9		PART NO. BA41-01174A
MODULE CODE	LAST EDIT: October 20, 2009 21:30:55 PM		PAGE 24 OF 56

SAMSUNG PROPRIETARY
THIS DOCUMENT CONTAINS CONFIDENTIAL PROPRIETARY INFORMATION THAT IS SAMSUNG ELECTRONICS CO'S PROPERTY. DO NOT DISCLOSE TO OR DUPLICATE FOR OTHERS EXCEPT AS AUTHORIZED BY SAMSUNG.

A-Channel #0

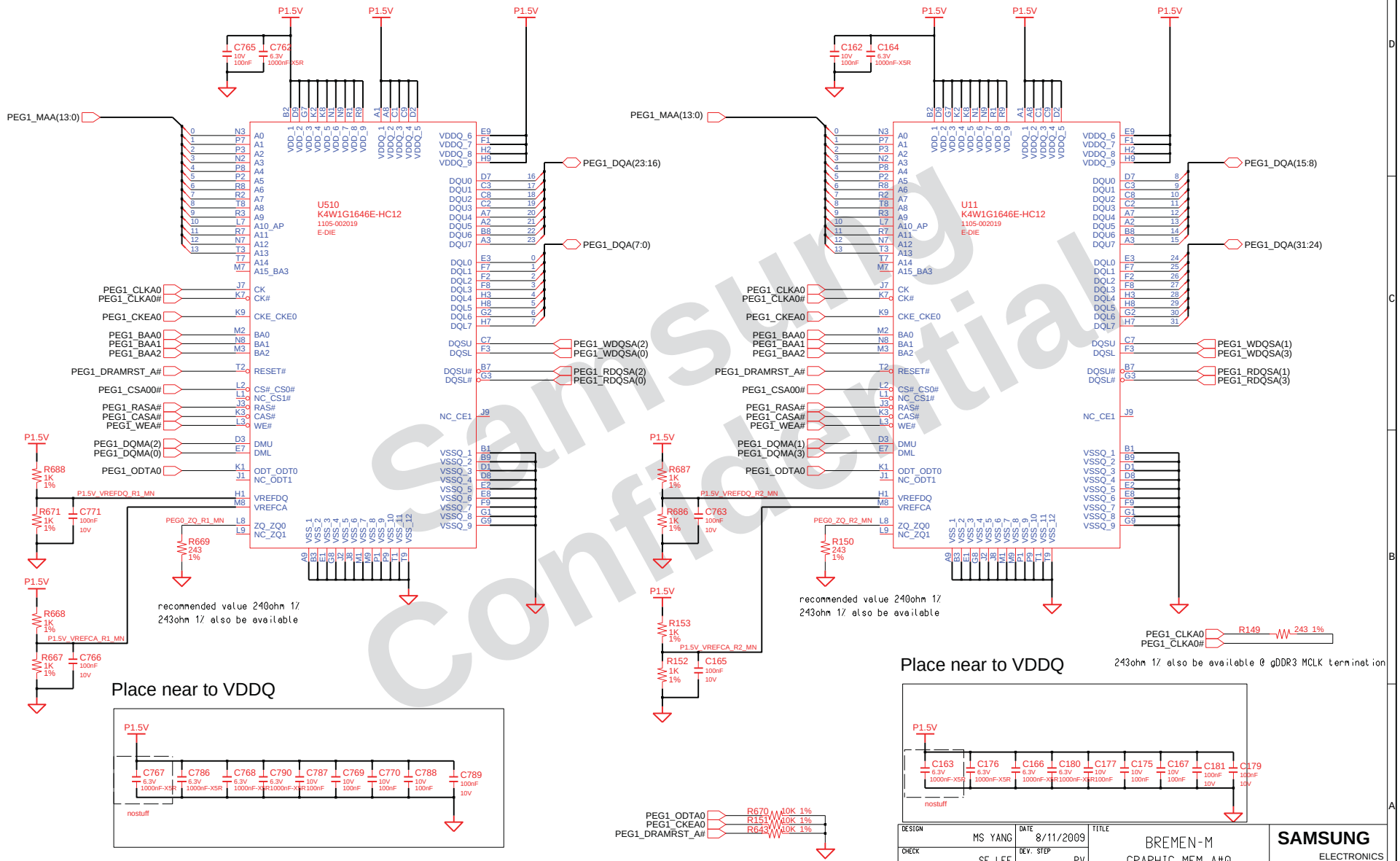

DESIGN: MS YANG	DATE: 8/11/2009	TITLE: BREMEN-M GRAPHIC_MEM A#0 GRAPHIC_MEM A#0	SAMSUNG ELECTRONICS
CHECK: SE LEE	DEV. STEP: PV		
APPROVAL: MK KIM	REV: REV 0.9		PART NO. BA41-01174A
MODULE CODE	LAST EDIT: October 20, 2009 21:30:55 PM		PAGE 25 OF 56

SAMSUNG PROPRIETARY
THIS DOCUMENT CONTAINS CONFIDENTIAL PROPRIETARY INFORMATION THAT IS SAMSUNG ELECTRONICS CO'S PROPERTY. DO NOT DISCLOSE TO OR DUPLICATE FOR OTHERS EXCEPT AS AUTHORIZED BY SAMSUNG.

A-Channel #1

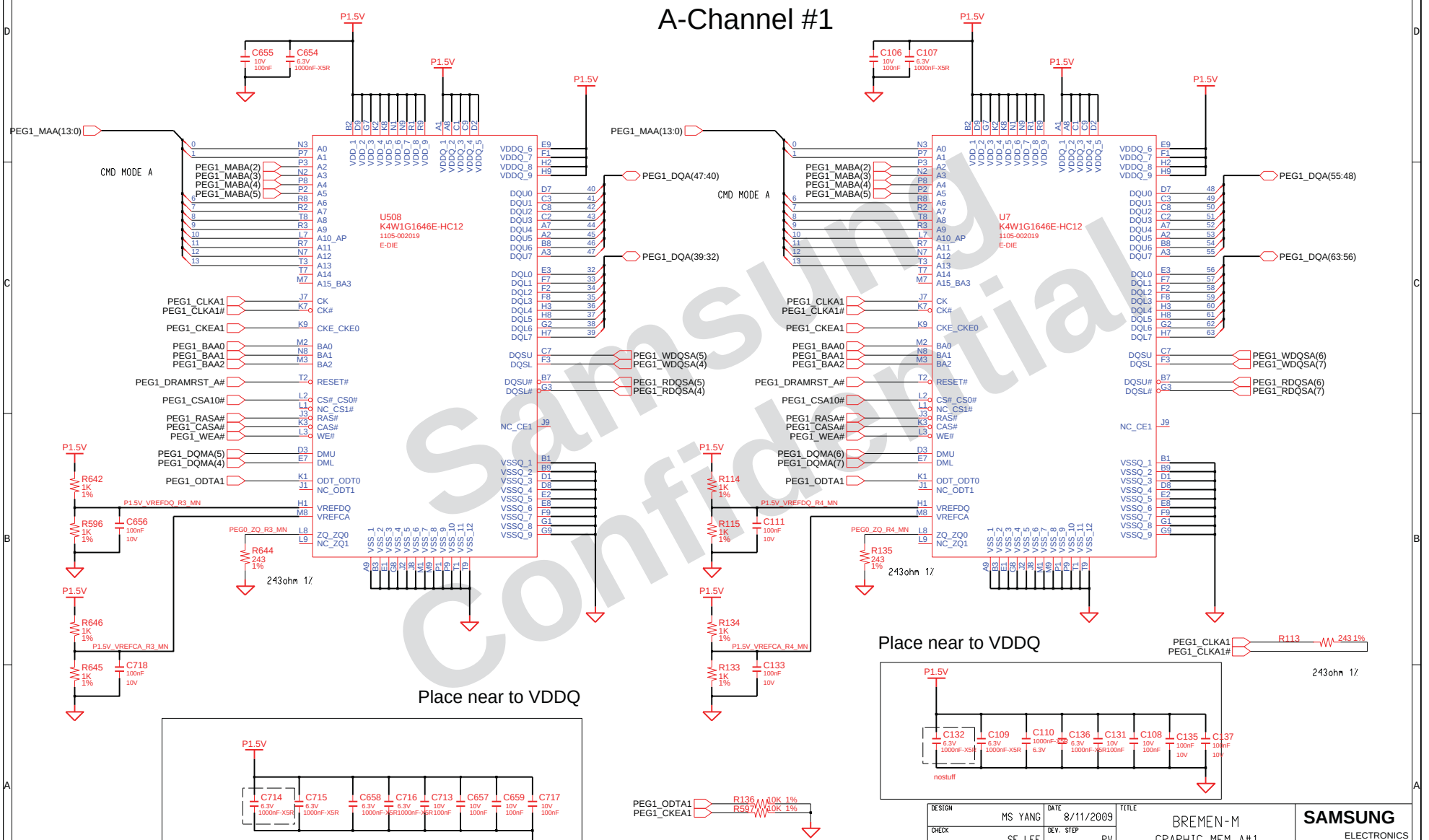

Samsung Confidential

DESIGN: MS YANG	DATE: 8/11/2009	TITLE: BREMEN-M GRAPHIC_MEM A#1 GRAPHIC_MEM A#1	SAMSUNG ELECTRONICS
CHECK: SE LEE	DEV. STEP: PV		
APPROVAL: MK KIM	REV: REV 0.9		PART NO. BA41-01174A
MODULE CODE	LAST EDIT: October 20, 2009 21:30:55 PM		PAGE 26 OF 56

SAMSUNG PROPRIETARY
THIS DOCUMENT CONTAINS CONFIDENTIAL PROPRIETARY INFORMATION THAT IS SAMSUNG ELECTRONICS CO'S PROPERTY. DO NOT DISCLOSE TO OR DUPLICATE FOR OTHERS EXCEPT AS AUTHORIZED BY SAMSUNG.

C-Channel #0

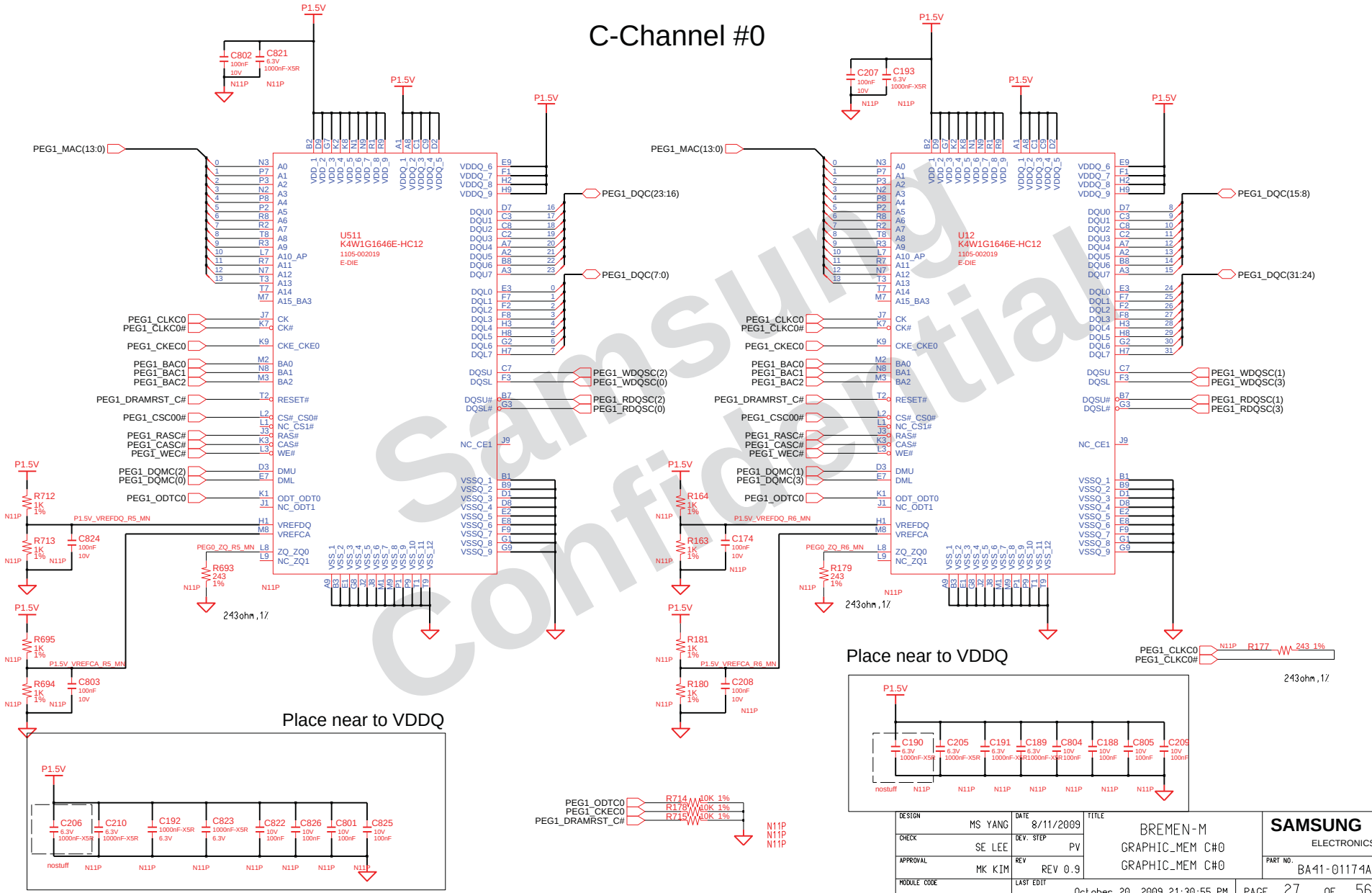

Samsung Confidential

DESIGN: MS YANG	DATE: 8/11/2009	TITLE: BREMEN-M GRAPHIC_MEM C#0 GRAPHIC_MEM C#0	SAMSUNG ELECTRONICS
CHECK: SE LEE	DEV. STEP: PV		PART NO. BA41-01174A
APPROVAL: MK KIM	REV: REV 0.9		
MODULE CODE	LAST EDIT: October 20, 2009 21:30:55 PM		PAGE 27 OF 56

SAMSUNG PROPRIETARY
THIS DOCUMENT CONTAINS CONFIDENTIAL PROPRIETARY INFORMATION THAT IS SAMSUNG ELECTRONICS CO'S PROPERTY. DO NOT DISCLOSE TO OR DUPLICATE FOR OTHERS EXCEPT AS AUTHORIZED BY SAMSUNG.

C-Channel #1

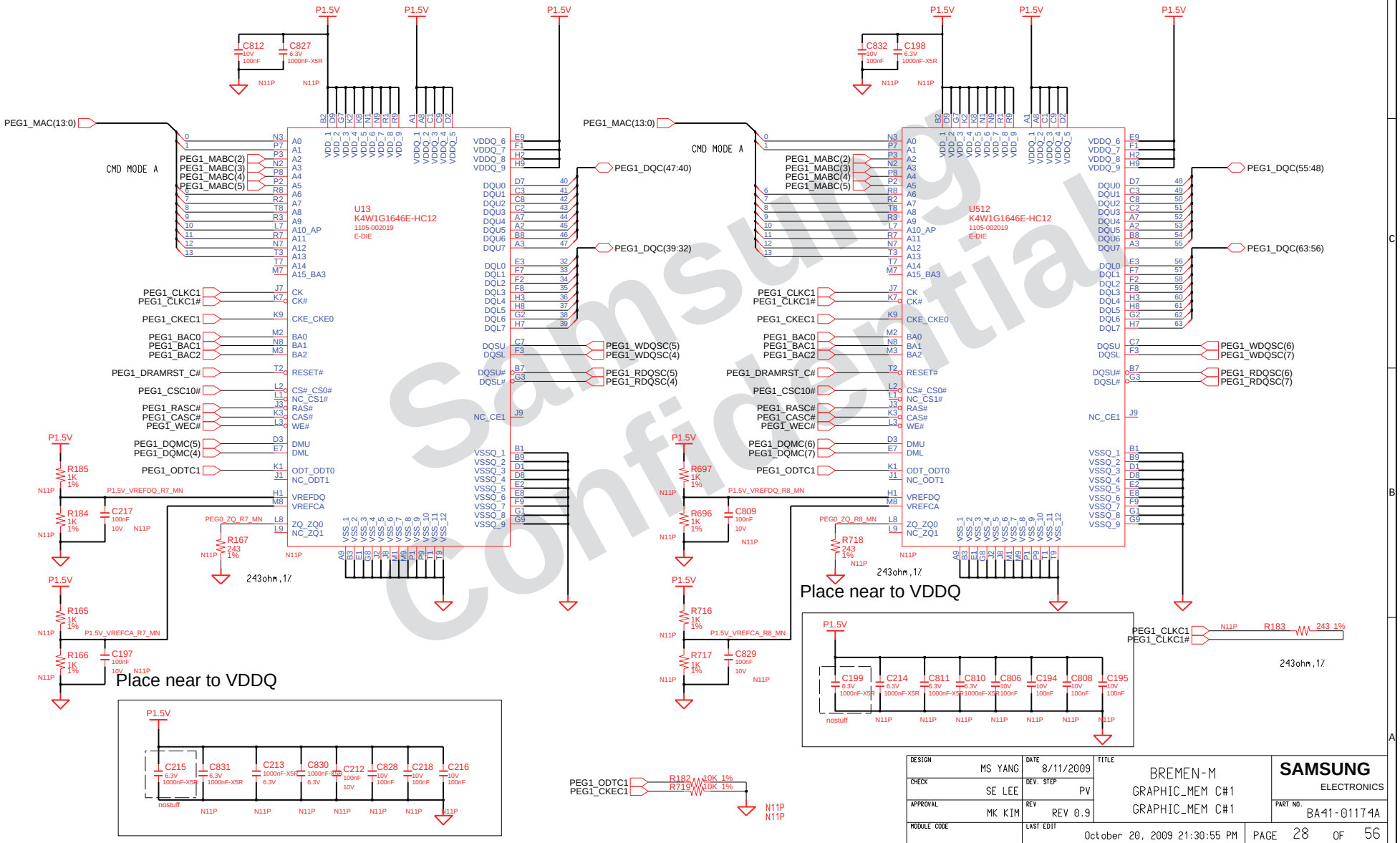

Samsung Confidential

DESIGN: MS YANG	DATE: 8/11/2009	TITLE: BREMEN-M GRAPHIC_MEM C#1 GRAPHIC_MEM C#1	SAMSUNG ELECTRONICS
CHECK: SE LEE	DEV. STEP: PV		
APPROVAL: MK KIM	REV: REV 0.9		PART NO. BA41-01174A
MODULE CODE	LAST EDIT: October 20, 2009 21:30:55 PM		PAGE 28 OF 56

SAMSUNG PROPRIETARY
THIS DOCUMENT CONTAINS CONFIDENTIAL PROPRIETARY INFORMATION THAT IS SAMSUNG ELECTRONICS CO'S PROPERTY. DO NOT DISCLOSE TO OR DUPLICATE FOR OTHERS EXCEPT AS AUTHORIZED BY SAMSUNG.

N11x_40nm STRAP

STRAP PIN	BIT 3	BIT 2	BIT 1	BIT0
ROM_SO	XCLK_417	FB_0_BAR_SIZE	SMB_ALT_ADDR	VGA_DEVICE
ROM_SCLK	PCI_DEVID[4]	SUB_VENDOR	SLOT_CLK_CFG	PEX_PLL_EN_TERM
ROM_SI	RAMCFG[3]	RAMCFG[2]	RAMCFG[1]	RAMCFG[0]
STRAP2	PCI_DEVID[3]	PCI_DEVID[2]	PCI_DEVID[1]	PCI_DEVID[0]
STRAP1	3GIO_PADCFG[3]	3GIO_PADCFG[2]	3GIO_PADCFG[1]	3GIO_PADCFG[0]
STRAP0	USER[3]	USER[2]	USER[1]	USER[0]

RESISTOR	PULL UP	PULL DOWN
5K	1000	0000
10K	1001	0001
15K	1010	0010
20K	1011	0011
25K	1100	0100
30K	1101	0101
35K	1110	0110
45K	1111	0111

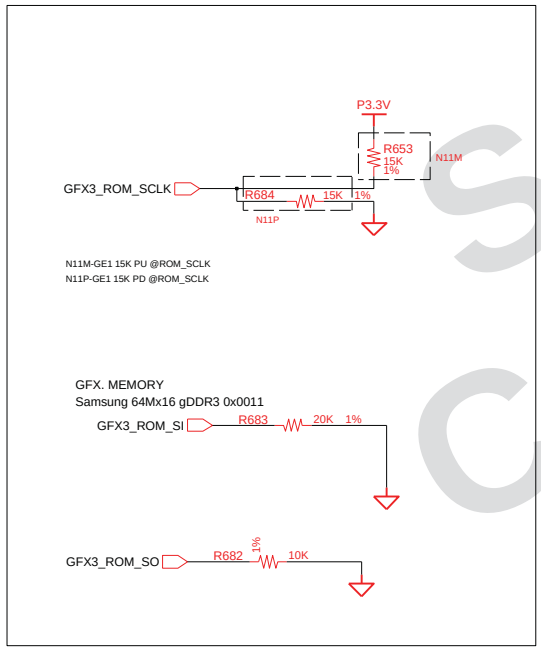

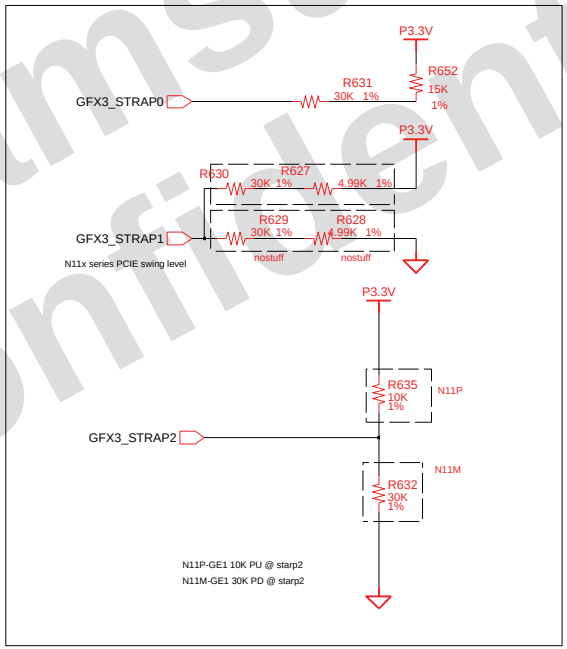

Samsung Confidential

DESIGN: MS YANG	DATE: 8/11/2009	TITLE: BREMEN-M N11X_40NM STRAP N11X_40NM STRAP	SAMSUNG ELECTRONICS
CHECK: SE LEE	DEV. STEP: PV		
APPROVAL: MK KIM	REV: REV 0.9		PART NO. BA41-01174A
MODULE CODE	LAST EDIT: October 20, 2009 21:30:55 PM		PAGE 29 OF 56

SAMSUNG PROPRIETARY
THIS DOCUMENT CONTAINS CONFIDENTIAL PROPRIETARY INFORMATION THAT IS SAMSUNG ELECTRONICS CO'S PROPERTY. DO NOT DISCLOSE TO OR DUPLICATE FOR OTHERS EXCEPT AS AUTHORIZED BY SAMSUNG.

LVDS

Backlight On

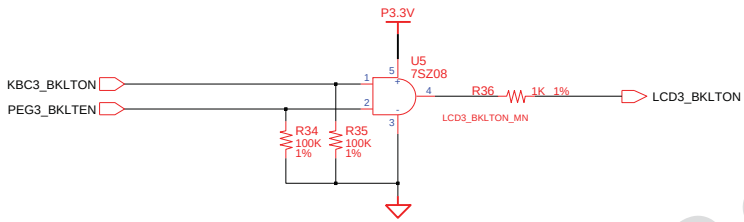

LCD Power

EBL Purpose

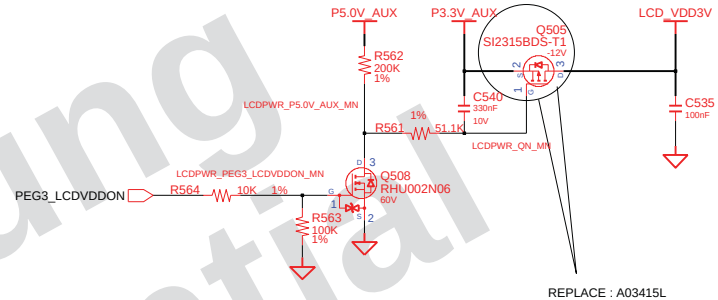

LED Power

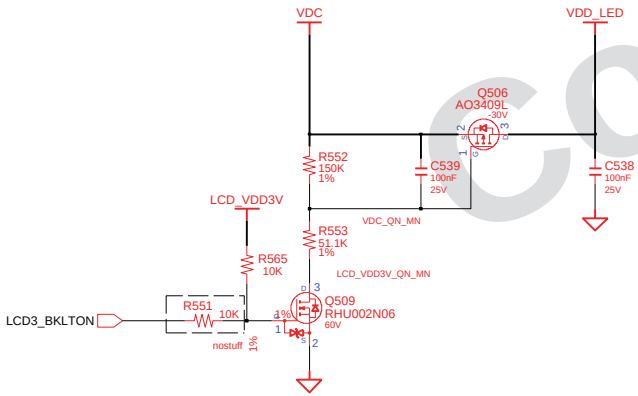

Camera + LCD Connector

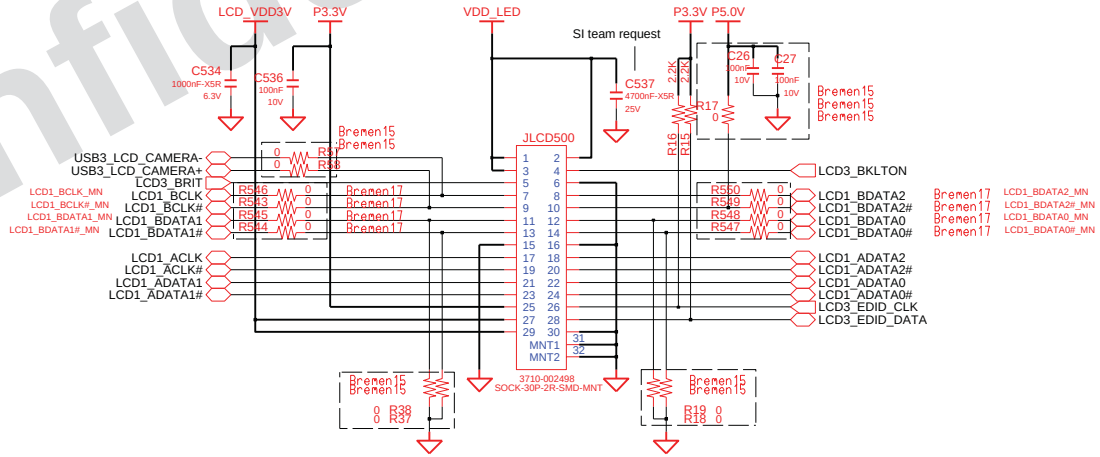

DESIGN: MS YANG	DATE: 8/11/2009	TITLE: BREMEN-M GRAPHICS_IF LVDS	SAMSUNG ELECTRONICS
CHECK: SE LEE	DEV. STEP: PV		
APPROVAL: MK KIM	REV: REV 0.9		PART NO. BA41-01174A
MODULE CODE	LAST EDIT: October 20, 2009 21:30:55 PM		PAGE 30 OF 56

Samsung Confidential

SAMSUNG PROPRIETARY
THIS DOCUMENT CONTAINS CONFIDENTIAL PROPRIETARY INFORMATION THAT IS SAMSUNG ELECTRONICS CO'S PROPERTY. DO NOT DISCLOSE TO OR DUPLICATE FOR OTHERS EXCEPT AS AUTHORIZED BY SAMSUNG.

CRT

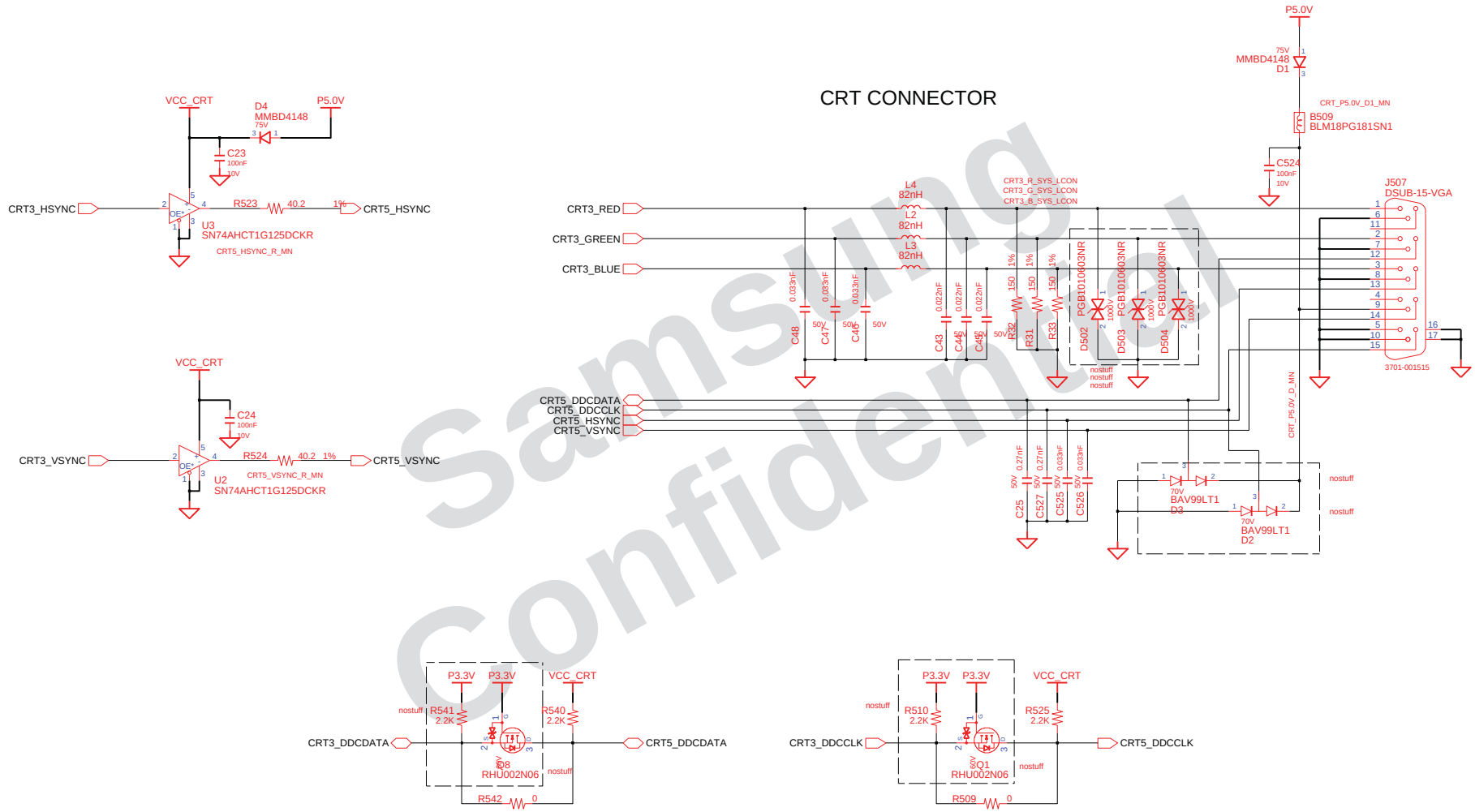

Samsung Confidential

DESIGN: MS YANG	DATE: 8/11/2009	TITLE: BREMEN-M GRAPHICS_IF CRT	SAMSUNG ELECTRONICS
CHECK: SE LEE	DEV. STEP: PV		PART NO. BA41-01174A
APPROVAL: MK KIM	REV: REV 0.9		
MODULE CODE	LAST EDIT: October 20, 2009 21:30:55 PM		PAGE 31 OF 56

SAMSUNG PROPRIETARY
THIS DOCUMENT CONTAINS CONFIDENTIAL PROPRIETARY INFORMATION THAT IS SAMSUNG ELECTRONICS CO'S PROPERTY. DO NOT DISCLOSE TO OR DUPLICATE FOR OTHERS EXCEPT AS AUTHORIZED BY SAMSUNG.

HDMI

FOR HDMI VERIFICATION TEST

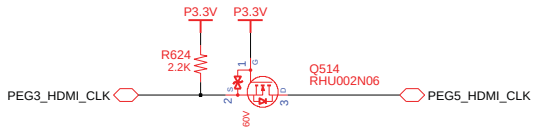

N10x/N11x_40nm HDMI/DP/LVDS support only 3.3V voltage tolerance

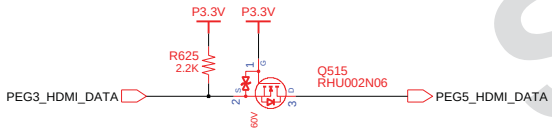

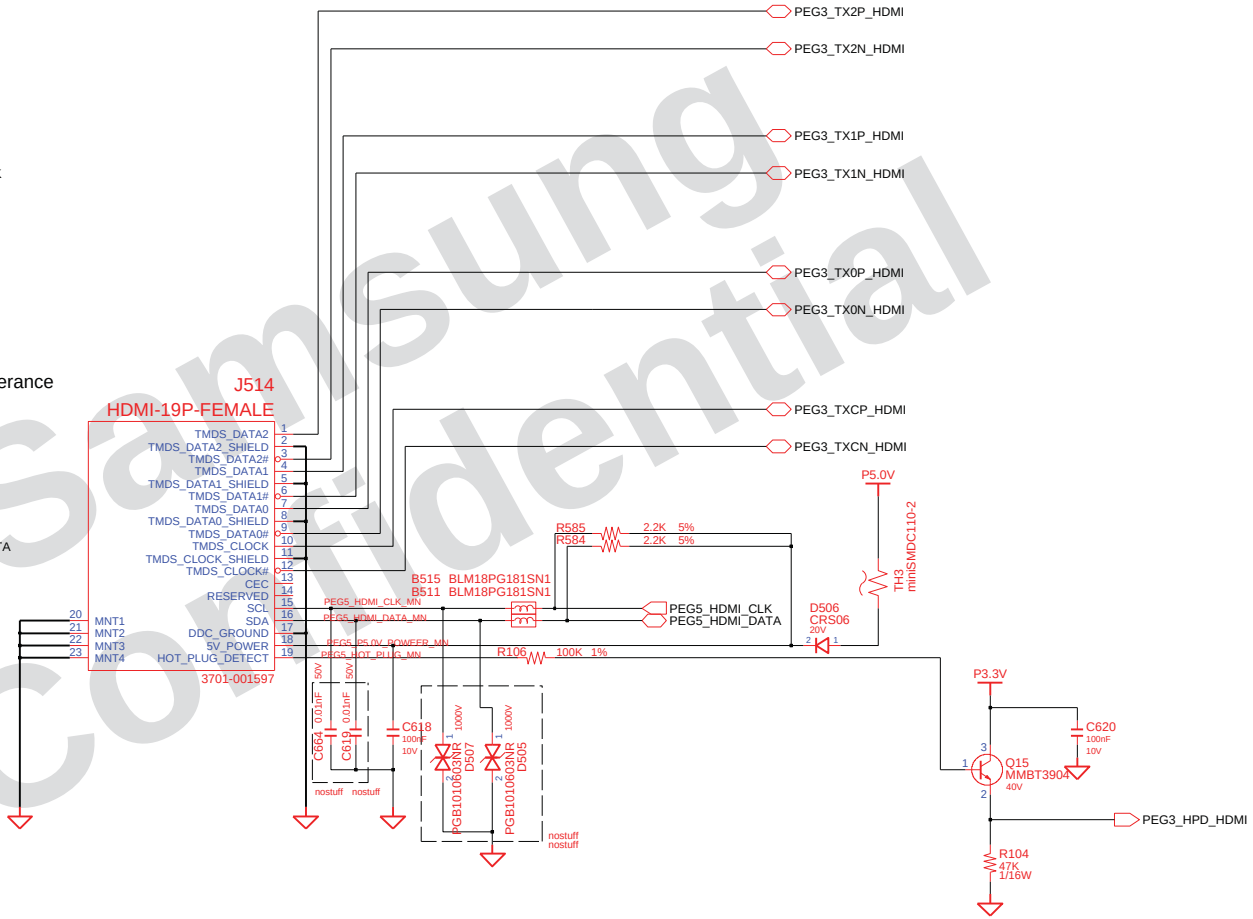

Samsung Confidential

DESIGN: MS YANG	DATE: 8/11/2009	TITLE: BREMEN-M GRAPHICS_IF HDMI	SAMSUNG ELECTRONICS
CHECK: SE LEE	DEV. STEP: PV		PART NO.: BA41-01174A
APPROVAL: MK KIM	REV: REV 0.9		
MODULE CODE	LAST EDIT: October 20, 2009 21:30:55 PM		PAGE 32 OF 56

SAMSUNG PROPRIETARY
THIS DOCUMENT CONTAINS CONFIDENTIAL PROPRIETARY INFORMATION THAT IS SAMSUNG ELECTRONICS CO'S PROPERTY. DO NOT DISCLOSE TO OR DUPLICATE FOR OTHERS EXCEPT AS AUTHORIZED BY SAMSUNG.

HD AUDIO

Codec Pin9 Setting	
S/B with Low Voltage IO	S/B without Low Voltage IO
Pin9 : 1.5V	Pin9 : 3.3V

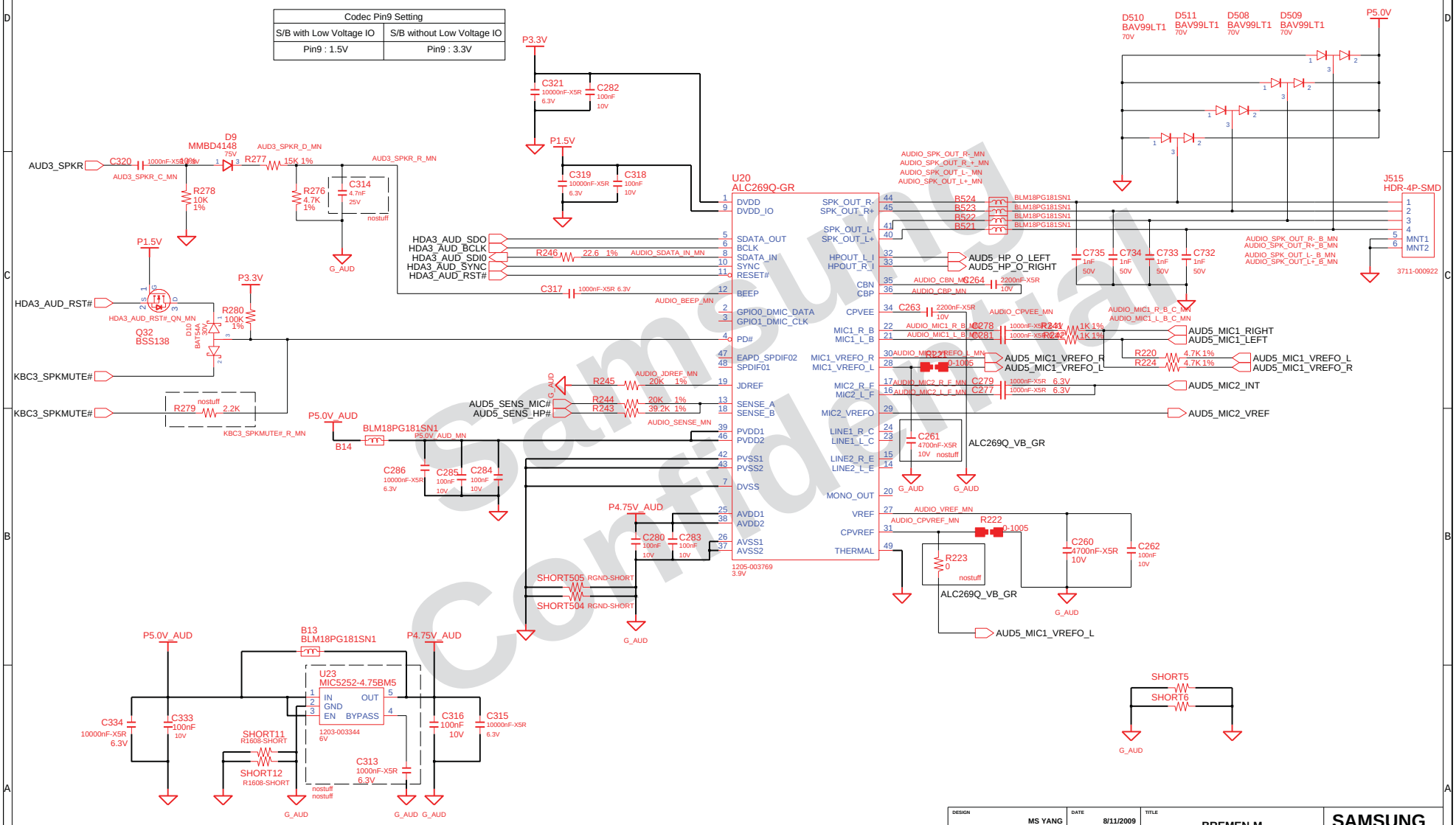

GMT : 1203-005579

DESIGN: MS YANG	DATE: 8/11/2009	TITLE: BREMEN-M / HDA_CODEC / AUDIO CODEC ALC269	SAMSUNG ELECTRONICS
CHECK: SE LEE	DEV. STEP: PV		
APPROVAL: MK KIM	REV: REV 0.9		PART NO.: BA41-01174A
MODULE CODE	LAST EDIT: October 20, 2009 21:30:55 PM	PAGE 33 OF 56	

SAMSUNG PROPRIETARY
THIS DOCUMENT CONTAINS CONFIDENTIAL PROPRIETARY INFORMATION THAT IS SAMSUNG ELECTRONICS CO'S PROPERTY. DO NOT DISCLOSE TO OR DUPLICATE FOR OTHERS EXCEPT AS AUTHORIZED BY SAMSUNG.

HEADPHONE(BLACK)

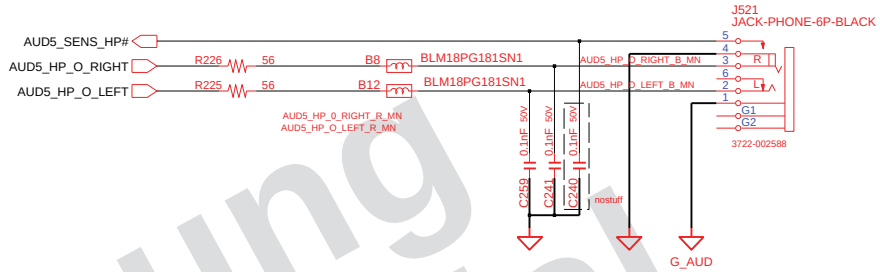

MIC JACK(BLACK)

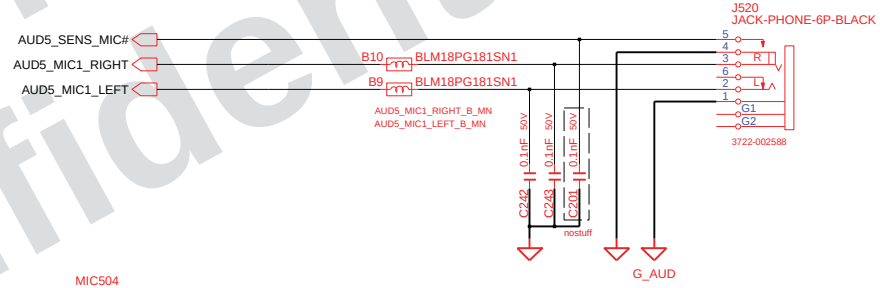

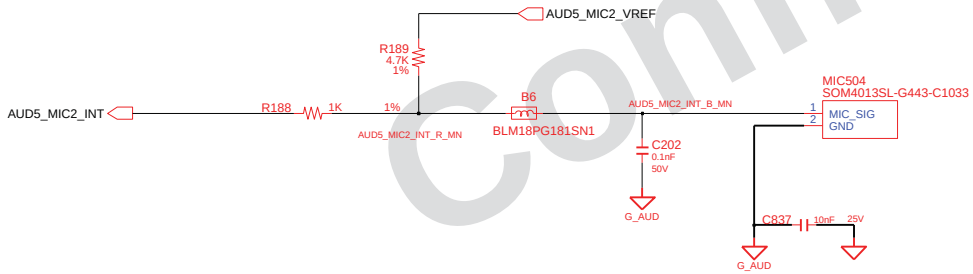

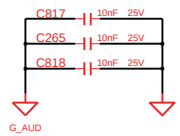

Samsung Confidential

DESIGN: MS YANG	DATE: 8/11/2009	TITLE: BREMEN-M HDA_CODEC AUDIO JACK	SAMSUNG ELECTRONICS
CHECK: SE LEE	DEV. STEP: PV		
APPROVAL: MK KIM	REV: REV 0.9		PART NO. BA41-01174A
MODULE CODE	LAST EDIT: October 20, 2009 21:30:55 PM		PAGE 34 OF 56

SAMSUNG PROPRIETARY
THIS DOCUMENT CONTAINS CONFIDENTIAL PROPRIETARY INFORMATION THAT IS SAMSUNG ELECTRONICS CO'S PROPERTY. DO NOT DISCLOSE TO OR DUPLICATE FOR OTHERS EXCEPT AS AUTHORIZED BY SAMSUNG.

Marvell 88E8059(48pin, QFN,no LED)

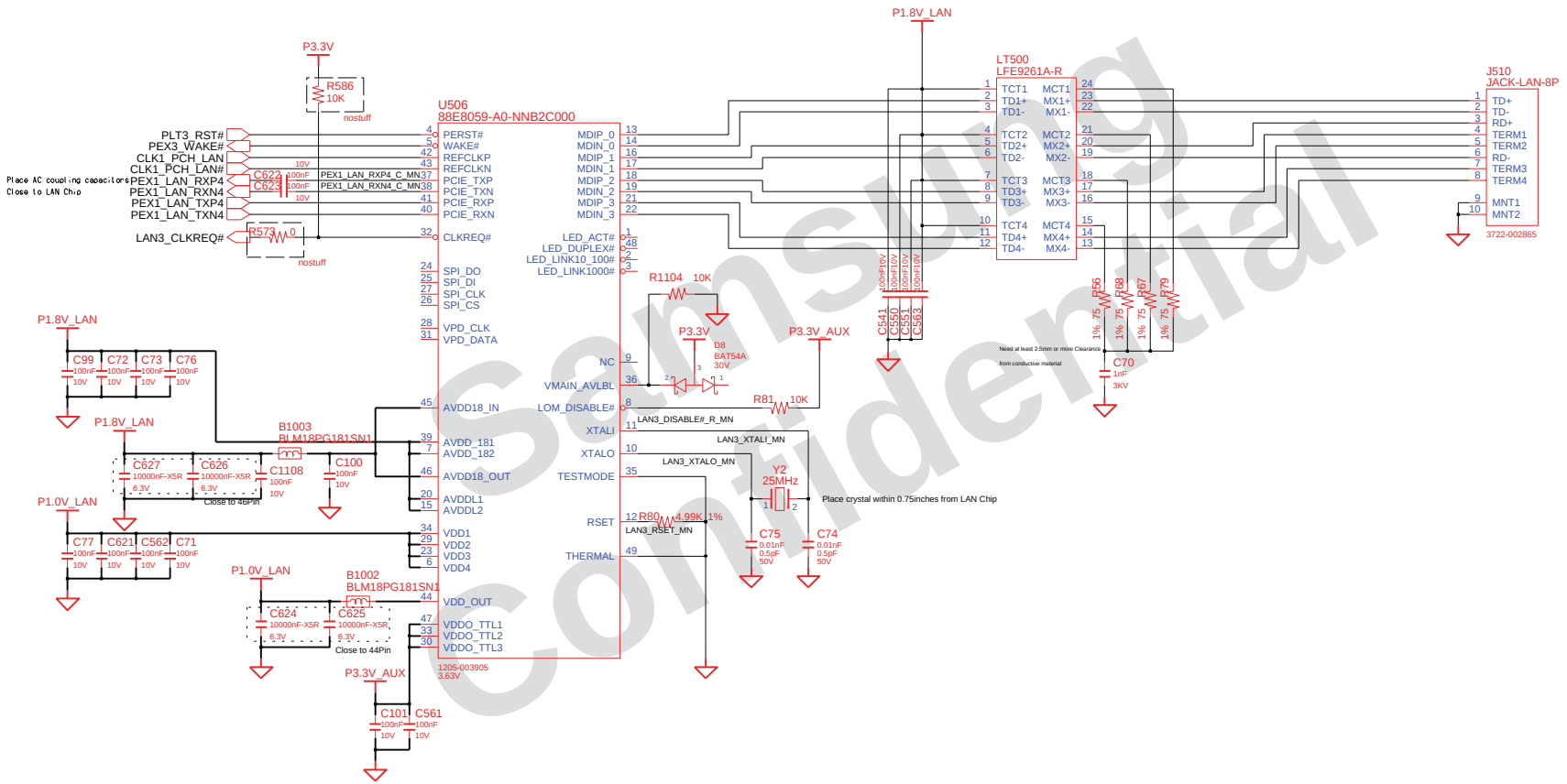

Samsung Confidential

DESIGN: MS YANG	DATE: 8/11/2009	TITLE: BREMEN-M LAN LAN_Realtek_RTL8103EL	SAMSUNG ELECTRONICS
CHECK: SE LEE	DEV. STEP: PV		
APPROVAL: MK KIM	REV: REV 0.9		PART NO.: BA41-01174A
MODULE CODE	LAST EDIT: October 20, 2009 21:30:55 PM		PAGE 35 OF 56

SAMSUNG PROPRIETARY
THIS DOCUMENT CONTAINS CONFIDENTIAL PROPRIETARY INFORMATION THAT IS SAMSUNG ELECTRONICS CO'S PROPERTY. DO NOT DISCLOSE TO OR DUPLICATE FOR OTHERS EXCEPT AS AUTHORIZED BY SAMSUNG.

Express Card

Express Card Power Switch

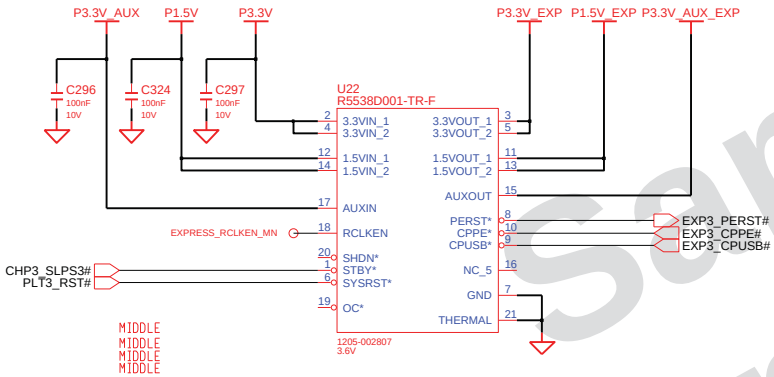

GMT : 1205-003667

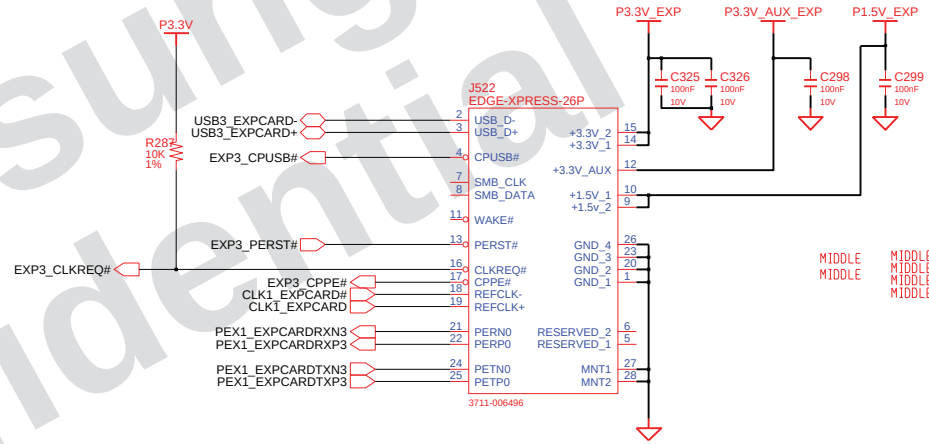

TYPE - I

Samsung Confidential

DESIGN: MS YANG	DATE: 8/11/2009	TITLE: BREMEN-M EXPRESS CARD EXPRESS CARD	SAMSUNG ELECTRONICS
CHECK: SE LEE	DEV. STEP: PV		PART NO.: BA41-01174A
APPROVAL: MK KIM	REV: REV 0.9		
MODULE CODE:	LAST EDIT: October 20, 2009 21:30:55 PM		PAGE 36 OF 56

SAMSUNG PROPRIETARY
THIS DOCUMENT CONTAINS CONFIDENTIAL PROPRIETARY INFORMATION THAT IS SAMSUNG ELECTRONICS CO'S PROPERTY. DO NOT DISCLOSE TO OR DUPLICATE FOR OTHERS EXCEPT AS AUTHORIZED BY SAMSUNG.

3 IN 1 CARD (AU6336)

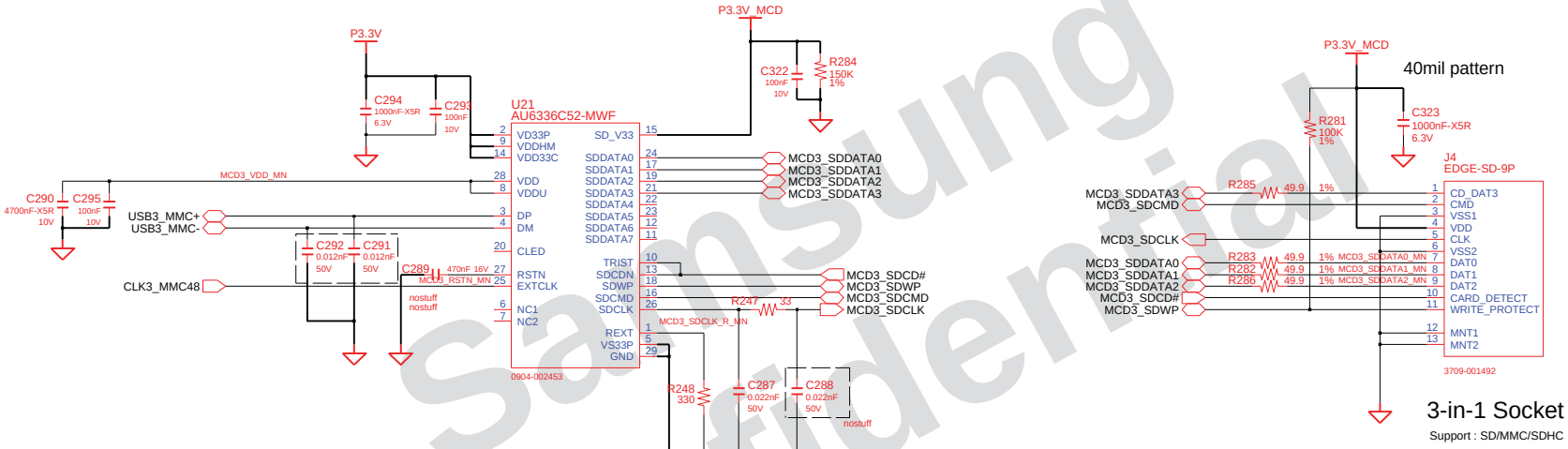

Samsung Confidential

DESIGN: MS YANG	DATE: 8/11/2009	TITLE: BREMEN-M MULTICARD 3 IN 1 CARD(GL827S)	SAMSUNG ELECTRONICS
CHECK: SE LEE	DEV. STEP: PV		
APPROVAL: MK KIM	REV: REV 0.9		PART NO.: BA41-01174A
MODULE CODE	LAST EDIT: October 20, 2009 21:30:55 PM		PAGE 37 OF 56

SAMSUNG PROPRIETARY
THIS DOCUMENT CONTAINS CONFIDENTIAL PROPRIETARY INFORMATION THAT IS SAMSUNG ELECTRONICS CO'S PROPERTY. DO NOT DISCLOSE TO OR DUPLICATE FOR OTHERS EXCEPT AS AUTHORIZED BY SAMSUNG.

AMT 6.0 : P3.3V = P3.3V_ALW (Check?)
wakeup pull-up power rail ?
Puma Peak -WiFi (AMT 6.0)
Kilmer Peak - WiFi/WiMax

WLAN, 4mm

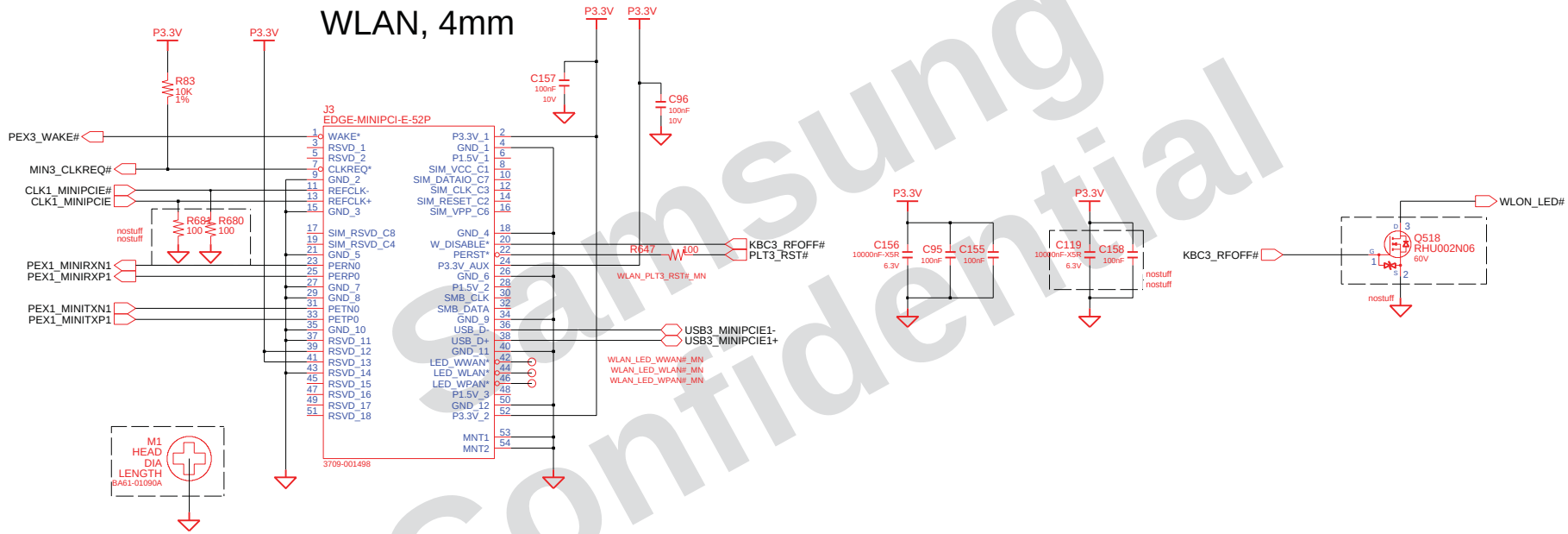

PEM : WLAN minicard (half type only)

Samsung Confidential

DESIGN: MS YANG	DATE: 8/11/2009	TITLE: BREMEN-M MINI_PCIE_CONN WLAN	SAMSUNG ELECTRONICS
CHECK: SE LEE	DEV. STEP: PV		
APPROVAL: MK KIM	REV: REV 0.9		PART NO.: BA41-01174A
MODULE CODE	LAST EDIT: October 20, 2009 21:30:55 PM		PAGE 38 OF 56

SAMSUNG PROPRIETARY
THIS DOCUMENT CONTAINS CONFIDENTIAL PROPRIETARY INFORMATION THAT IS SAMSUNG ELECTRONICS CO'S PROPERTY. DO NOT DISCLOSE TO OR DUPLICATE FOR OTHERS EXCEPT AS AUTHORIZED BY SAMSUNG.

SATA I/F CONN

SATA HDD CONN

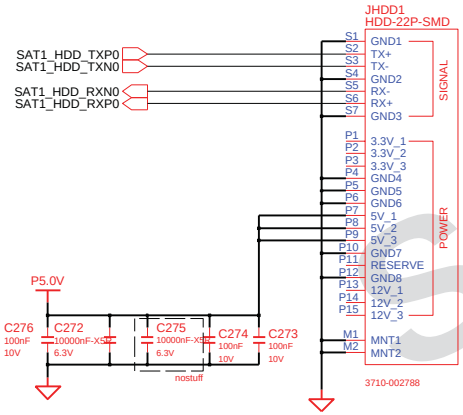

MAIN TO SUB SATA ODD CONN

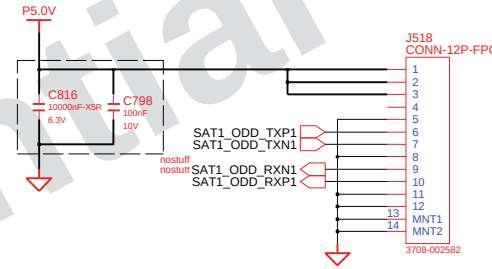

Samsung Confidential

DESIGN: MS YANG	DATE: 8/11/2009	TITLE: BREMEN-M SATA_DEVICES HDD & ODD SUB CONNECTOR	SAMSUNG ELECTRONICS
CHECK: SE LEE	DEV. STEP: PV		
APPROVAL: MK KIM	REV: REV 0.9		PART NO.: BA41-01174A
MODULE CODE	LAST EDIT: October 20, 2009 21:30:55 PM		PAGE 39 OF 56

SAMSUNG PROPRIETARY
THIS DOCUMENT CONTAINS CONFIDENTIAL PROPRIETARY INFORMATION THAT IS SAMSUNG ELECTRONICS CO'S PROPERTY. DO NOT DISCLOSE TO OR DUPLICATE FOR OTHERS EXCEPT AS AUTHORIZED BY SAMSUNG.

MAIN BOARD (MICOM)

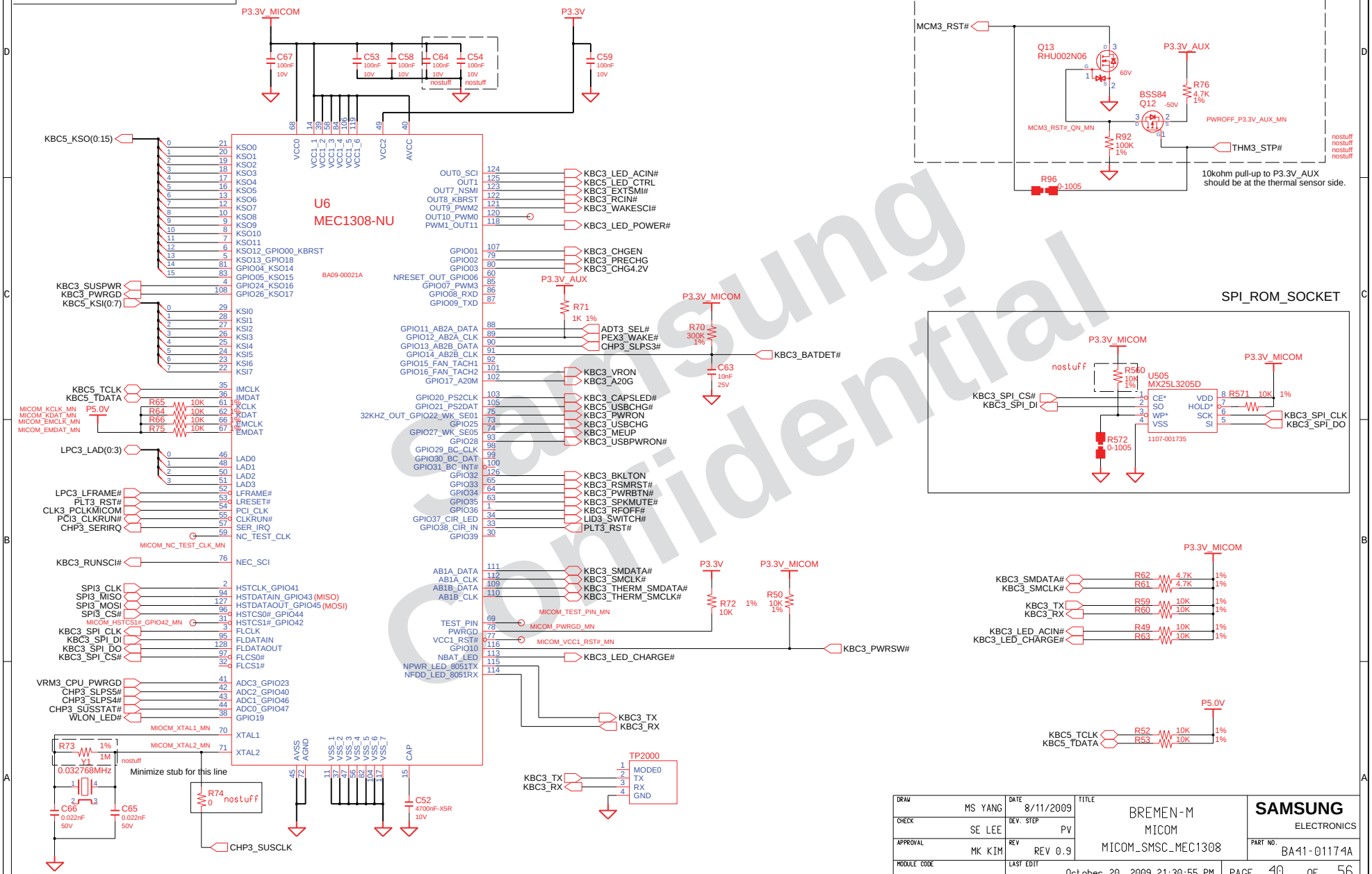

Samsung Confidential

DRAW: MS YANG	DATE: 8/11/2009	TITLE: BREMEN-M MICOM MICOM_SMSC_MEC1308	SAMSUNG ELECTRONICS
CHECK: SE LEE	DEV. STEP: PV		
APPROVAL: MK KIM	REV: REV 0.9		PART NO. BA41-01174A
MODULE CODE	LAST EDIT: October 20, 2009 21:30:55 PM		PAGE 40 OF 56

SAMSUNG PROPRIETARY
THIS DOCUMENT CONTAINS CONFIDENTIAL PROPRIETARY INFORMATION THAT IS SAMSUNG ELECTRONICS CO'S PROPERTY. DO NOT DISCLOSE TO OR DUPLICATE FOR OTHERS EXCEPT AS AUTHORIZED BY SAMSUNG.

Micom Glue Logic

KEYBOARD

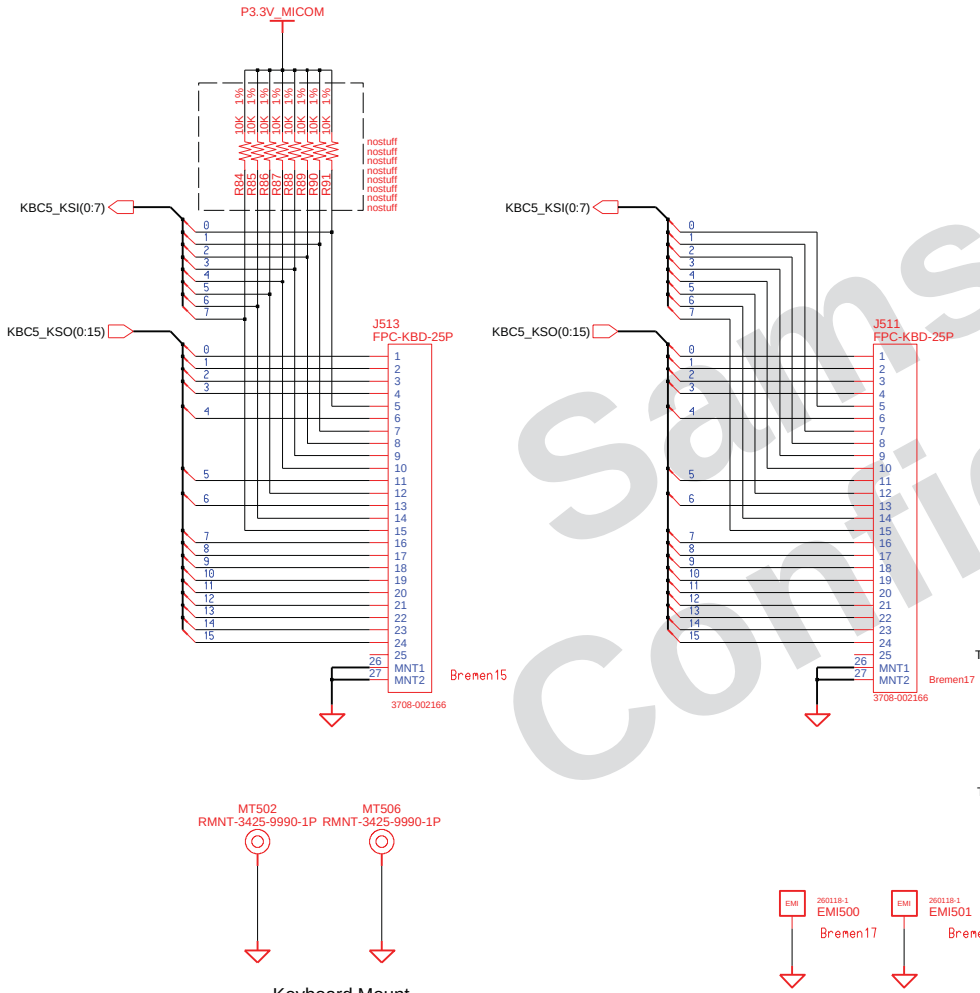

LID_SWITCH

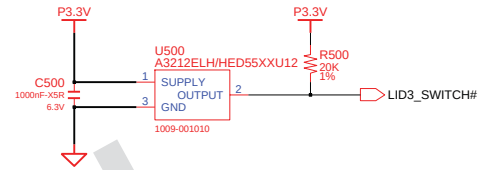

TOUCHPAD

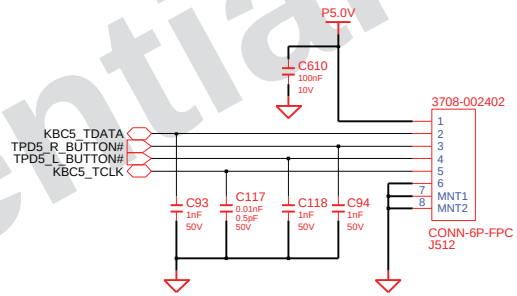

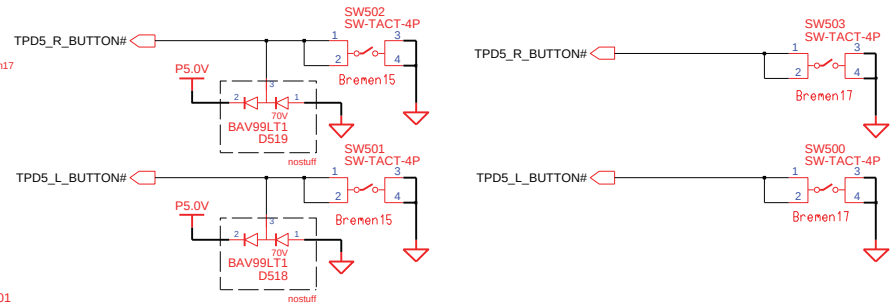

Samsung Confidential

DESIGN: MS YANG	DATE: 8/11/2009	TITLE: BREMEN-M MICOM GLUE LOGIC KETBOARD & TOUCHPAD	SAMSUNG ELECTRONICS
CHECK: SE LEE	DEV. STEP: PV		
APPROVAL: MK KIM	REV: REV 0.9		PART NO.: BA41-01174A
MODULE CODE	LAST EDIT: October 20, 2009 21:30:55 PM		PAGE 41 OF 56

SAMSUNG PROPRIETARY
THIS DOCUMENT CONTAINS CONFIDENTIAL
PROPRIETARY INFORMATION THAT IS
SAMSUNG ELECTRONICS CO'S PROPERTY.
DO NOT DISCLOSE TO OR DUPLICATE FOR OTHERS
EXCEPT AS AUTHORIZED BY SAMSUNG.

FUNCTION KEY LED

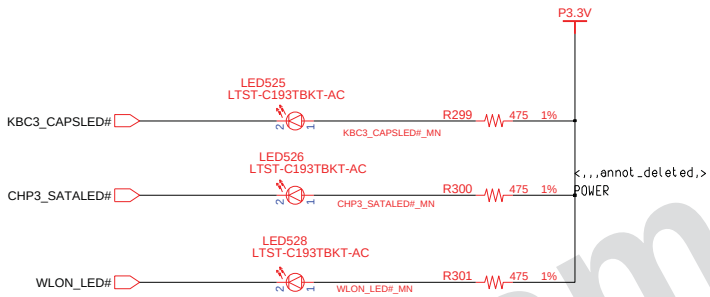

ADAPTERIN/CHARGING LED

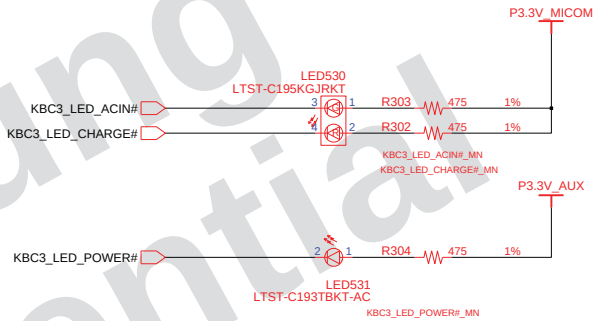

Samsung Confidential

DRAW: MS YANG	DATE: 8/11/2009	TITLE: BREMEN-M LED_SWITCH LED_SWITCH	SAMSUNG ELECTRONICS
CHECK: SE LEE	DEV. STEP: PV		
APPROVAL: MK KIM	REV: REV 0.9		PART NO.: BA41-01174A
MODULE CODE	LAST EDIT: October 20, 2009 21:30:55 PM		PAGE 42 OF 56

SAMSUNG PROPRIETARY
THIS DOCUMENT CONTAINS CONFIDENTIAL PROPRIETARY INFORMATION THAT IS SAMSUNG ELECTRONICS CO'S PROPERTY. DO NOT DISCLOSE TO OR DUPLICATE FOR OTHERS EXCEPT AS AUTHORIZED BY SAMSUNG.

USB + eSATA CONNECTOR

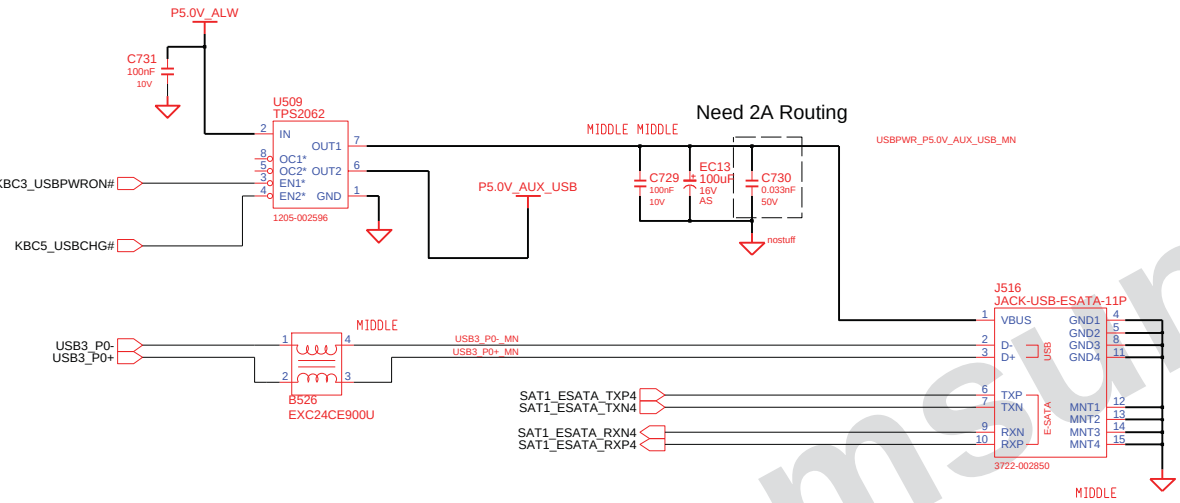

USB Single connector

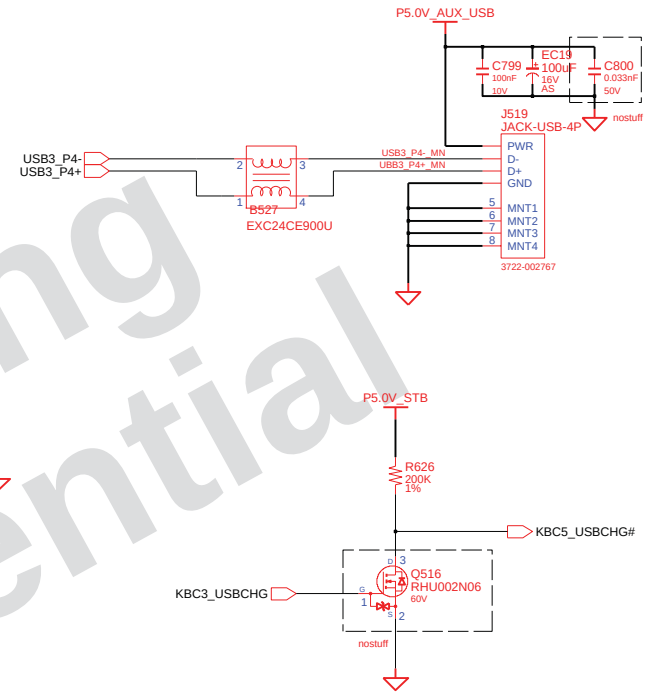

for sleep in charge

USB SUB B'D CONNECTOR

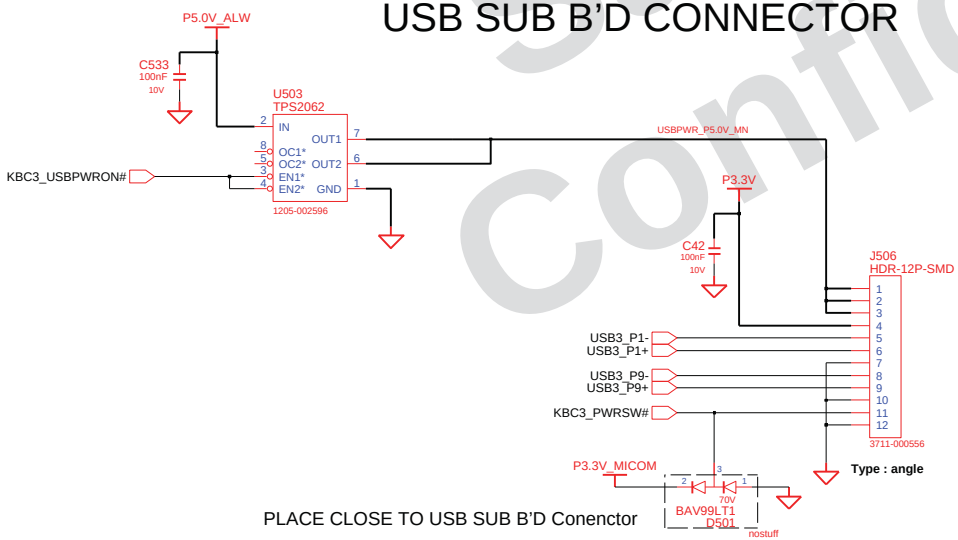

PLACE CLOSE TO USB SUB B'D Conenctor

Samsung Confidential

DESIGN: MS YANG	DATE: 8/11/2009	TITLE: BREMEN-M USB_CONN USB & eSATA	SAMSUNG ELECTRONICS
CHECK: SE LEE	DEV. STEP: PV		PART NO. BA41-01174A
APPROVAL: MK KIM	REV: REV 0.9		
MODULE CODE	LAST EDIT: October 20, 2009 21:30:55 PM		PAGE 43 OF 56

SAMSUNG PROPRIETARY
THIS DOCUMENT CONTAINS CONFIDENTIAL PROPRIETARY INFORMATION THAT IS SAMSUNG ELECTRONICS CO'S PROPERTY. DO NOT DISCLOSE TO OR DUPLICATE FOR OTHERS EXCEPT AS AUTHORIZED BY SAMSUNG.

Touchpad LED

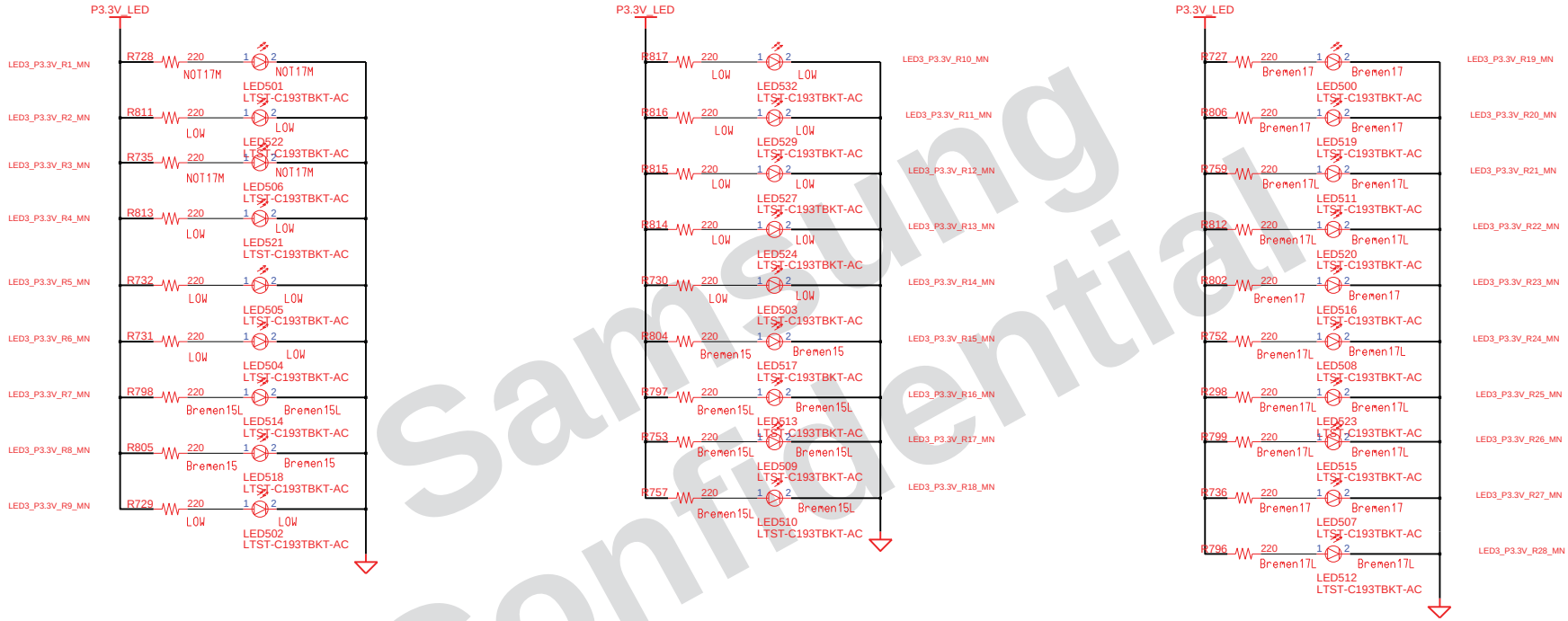

Samsung Confidential

DESIGN: MS YANG	DATE: 8/11/2009	TITLE: BREMEN-M TOUCHPAD LED TOUCHPAD LED	SAMSUNG ELECTRONICS
CHECK: SE LEE	DEV. STEP: PV		
APPROVAL: MK KIM	REV: REV 0.9		PART NO.: BA41-01174A
MODULE CODE	LAST EDIT: October 20, 2009 21:30:55 PM		PAGE 44 OF 56

SAMSUNG PROPRIETARY
THIS DOCUMENT CONTAINS CONFIDENTIAL PROPRIETARY INFORMATION THAT IS SAMSUNG ELECTRONICS CO'S PROPERTY. DO NOT DISCLOSE TO OR DUPLICATE FOR OTHERS EXCEPT AS AUTHORIZED BY SAMSUNG.

USB I/F Devices

Bluetooth Interface

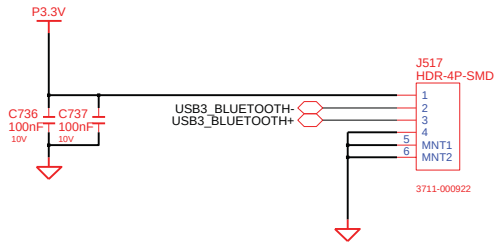

CAMERA (17Inch)

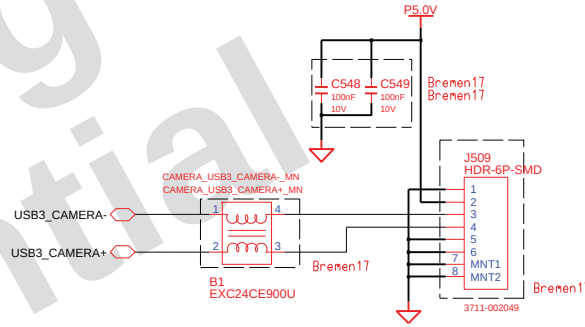

80h PORT DEBUG

For MICOM 80H Debug Port Test

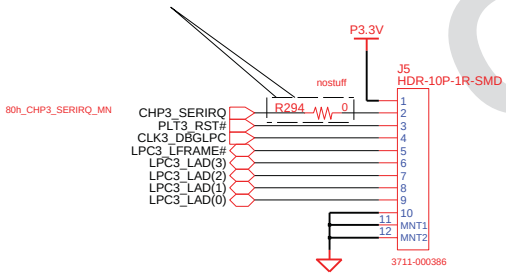

Samsung Confidential

DESIGN: MS YANG	DATE: 8/11/2009	TITLE: BREMEN-M USB_DEVICES BLUETOOTH & CAMERA	SAMSUNG ELECTRONICS
CHECK: SE LEE	DEV. STEP: PV		
APPROVAL: MK KIM	REV: REV 0.9		PART NO.: BA41-01174A
MODULE CODE	LAST EDIT: October 20, 2009 21:30:55 PM		PAGE 45 OF 56

SAMSUNG PROPRIETARY
THIS DOCUMENT CONTAINS CONFIDENTIAL PROPRIETARY INFORMATION THAT IS SAMSUNG ELECTRONICS CO'S PROPERTY. DO NOT DISCLOSE TO OR DUPLICATE FOR OTHERS EXCEPT AS AUTHORIZED BY SAMSUNG.

CHARGER & POWER MANAGEMENT

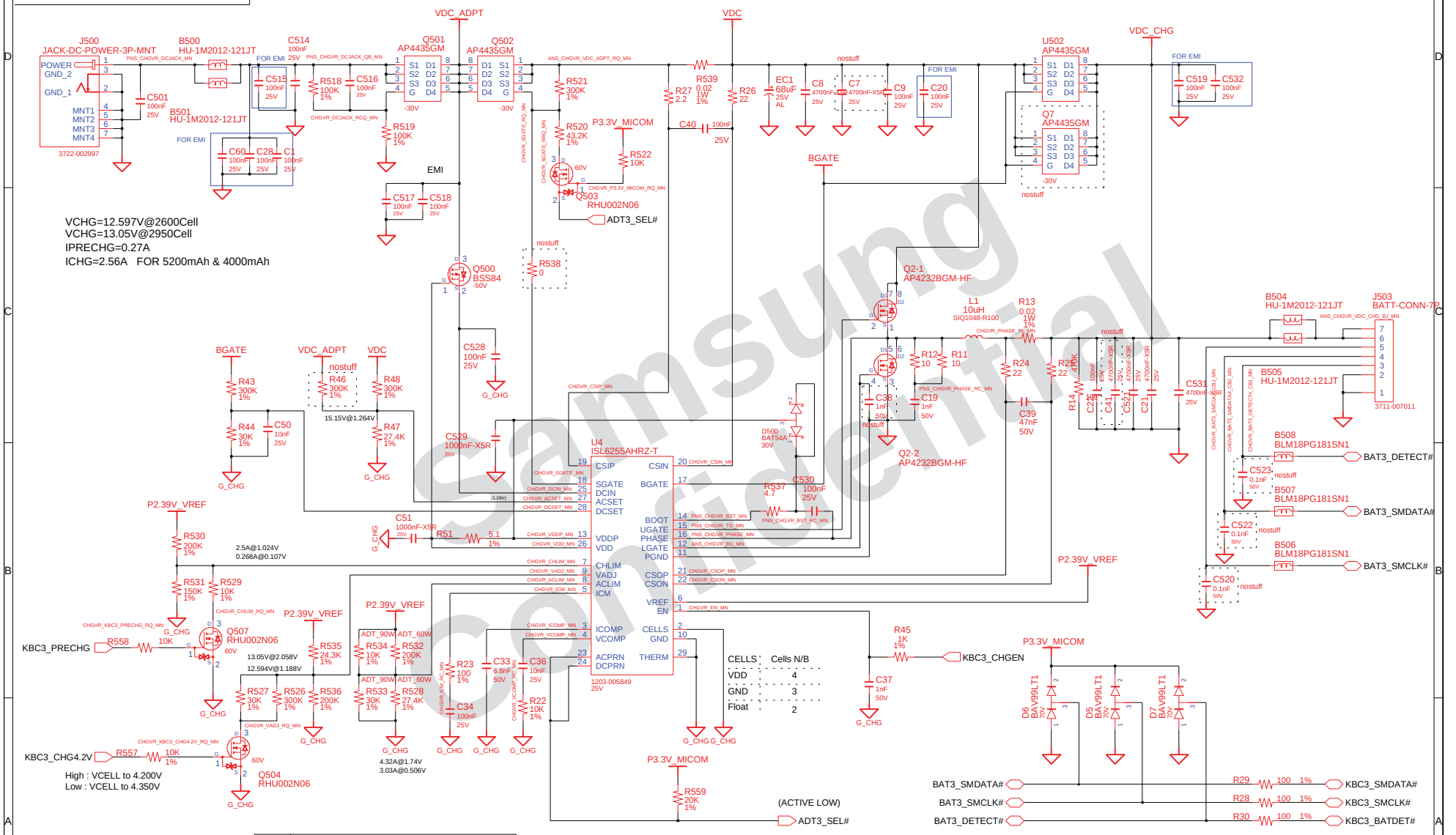

	Adapter configuration			
	60W / 3.03A / 96%		90W / 4.32A / 91.2%	
	Value	SEC Code	Value	SEC Code
Rtop	200K	2007-007334	10K	2007-007142
Rbot	27.4K	2007-007274	30K	2007-008275

DRAW: MS YANG	DATE: 8/11/2009	TITLE: BREMEN-M CHARGER Charger	SAMSUNG ELECTRONICS
CHECK: SE LEE	DEV. STEP: PV		PART NO. BA41-01174A
APPROVAL: MK KIM	REV: REV 0.9		
MODULE CODE: undefined	LAST EDIT: October 20, 2009 21:30:55 PM	PAGE 46 OF 56	

SAMSUNG PROPRIETARY
THIS DOCUMENT CONTAINS CONFIDENTIAL PROPRIETARY INFORMATION THAT IS SAMSUNG ELECTRONICS CO'S PROPERTY. DO NOT DISCLOSE TO OR DUPLICATE FOR OTHERS EXCEPT AS AUTHORIZED BY SAMSUNG.

P3.3V_AUX & P5.0V_AUX

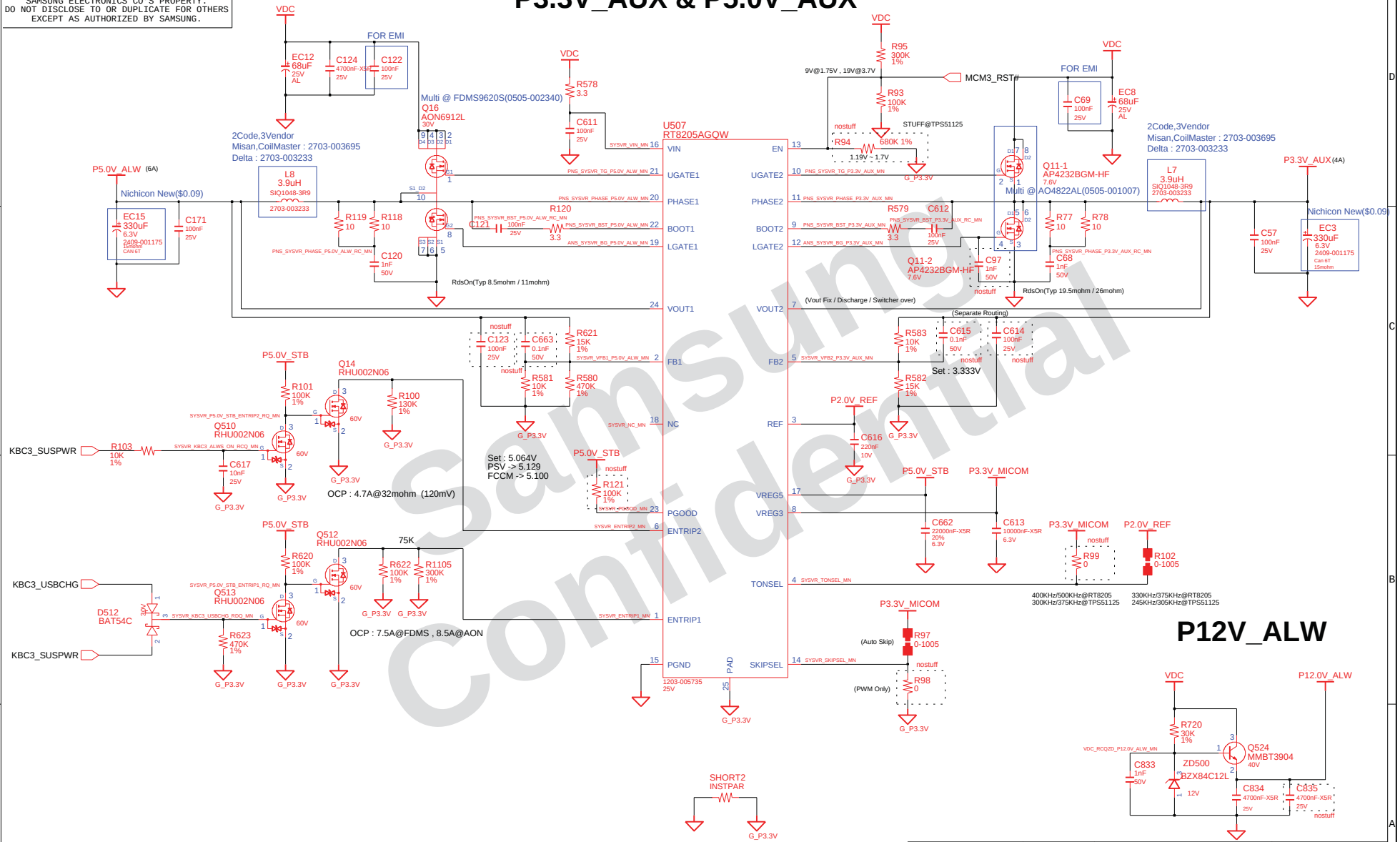

DESIGN: MS YANG	DATE: 8/11/2009	TITLE: BREMEN-M P3.3V_ALW / P5.0V_ALW P3.3V_AUX & P5.0V_AUX	SAMSUNG ELECTRONICS
CHECK: SE LEE	DEV. STEP: PV		
APPROVAL: MK KIM	REV: REV 0.9		PART NO. BA41-01174A
MODULE CODE	LAST EDIT: October 20, 2009 21:30:55 PM		PAGE 47 OF 56

Samsung Confidential

SAMSUNG PROPRIETARY
THIS DOCUMENT CONTAINS CONFIDENTIAL PROPRIETARY INFORMATION THAT IS SAMSUNG ELECTRONICS CO'S PROPERTY. DO NOT DISCLOSE TO OR DUPLICATE FOR OTHERS EXCEPT AS AUTHORIZED BY SAMSUNG.

CHIPSET POWER(P1.05V_VTT)

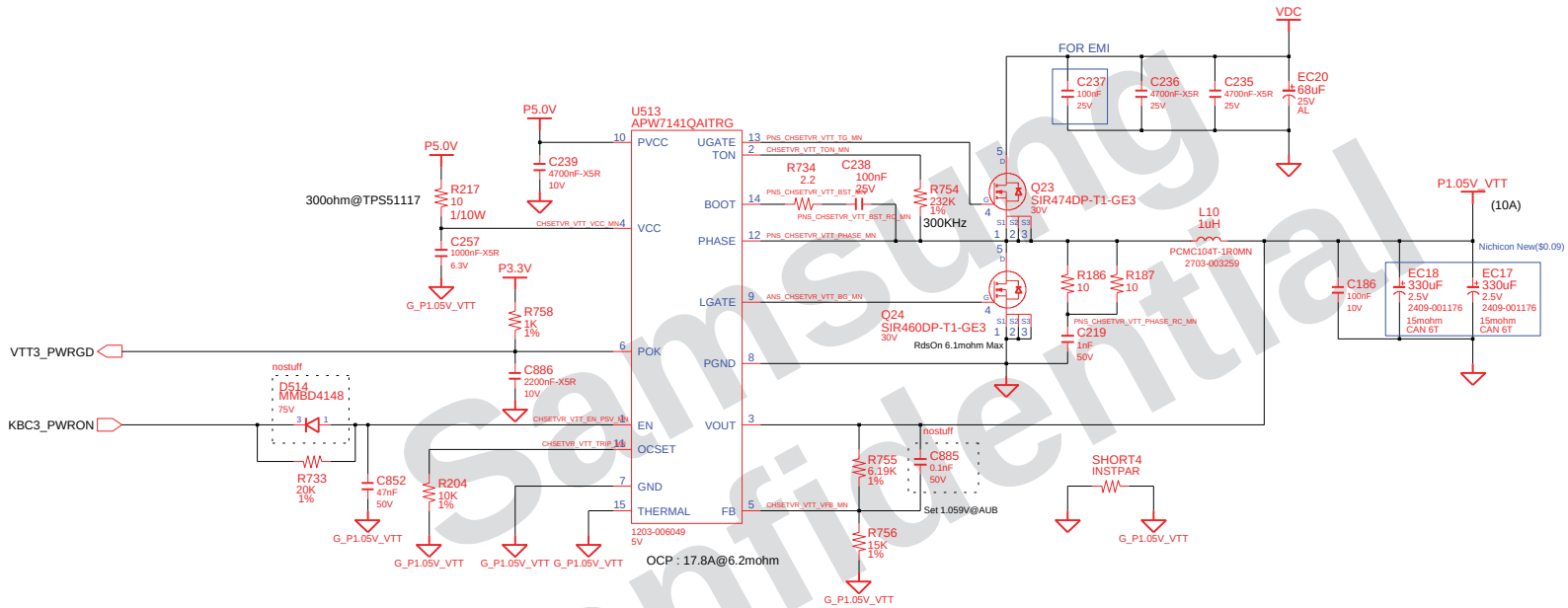

Samsung Confidential

DRAW: MS YANG	DATE: 8/11/2009	TITLE: BREMEN-M Chipset Power Chipset Power (P1.05VTT)	SAMSUNG ELECTRONICS
CHECK: SE LEE	DEV. STEP: PV		
APPROVAL: MK KIM	REV: REV 0.9		PART NO. BA41-01174A
MODULE CODE: undefined	LAST EDIT: October 20, 2009 21:30:55 PM		PAGE 48 OF 56

SAMSUNG PROPRIETARY
THIS DOCUMENT CONTAINS CONFIDENTIAL PROPRIETARY INFORMATION THAT IS SAMSUNG ELECTRONICS CO'S PROPERTY. DO NOT DISCLOSE TO OR DUPLICATE FOR OTHERS EXCEPT AS AUTHORIZED BY SAMSUNG.

DDR3 Power

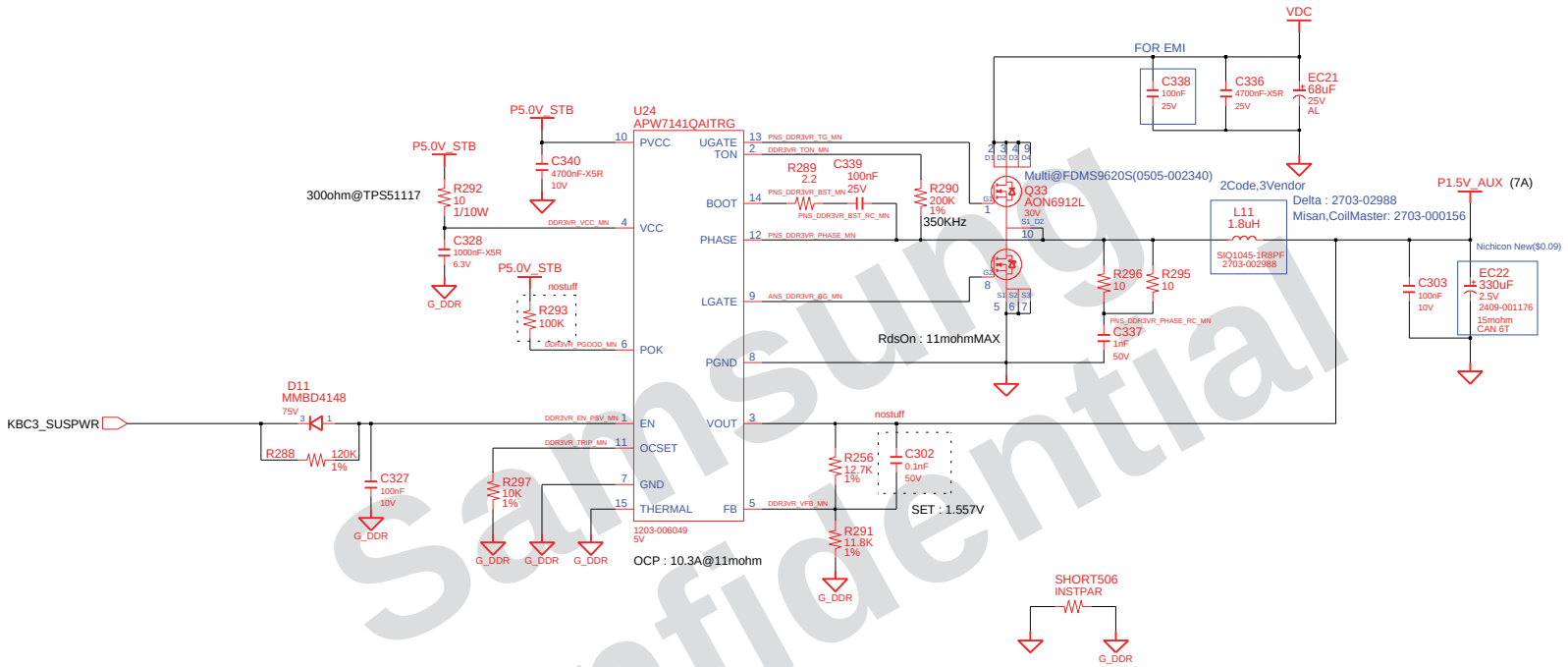

DDR3 VTT(0.75V)

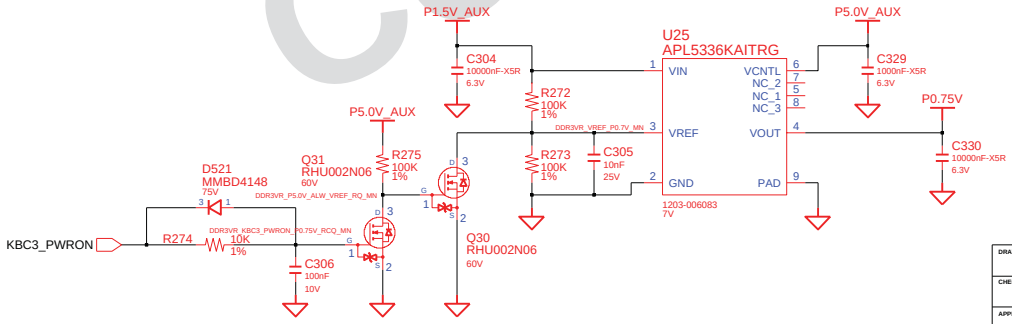

DRAW: MS YANG	DATE: 8/11/2009	TITLE: BREMEN-M PWR_MEMORY DDR3 POWER	SAMSUNG ELECTRONICS
CHECK: SE LEE	DEV. STEP: PV		PART NO.: BA41-01174A
APPROVAL: MK KIM	REV: REV 0.9		
MODULE CODE: undefined	LAST EDIT: October 20, 2009 21:30:55 PM	PAGE 49 OF 56	

Samsung Confidential

SAMSUNG PROPRIETARY
THIS DOCUMENT CONTAINS CONFIDENTIAL PROPRIETARY INFORMATION THAT IS SAMSUNG ELECTRONICS CO'S PROPERTY. DO NOT DISCLOSE TO OR DUPLICATE FOR OTHERS EXCEPT AS AUTHORIZED BY SAMSUNG.

CPU VRM (IMVP-6.5)

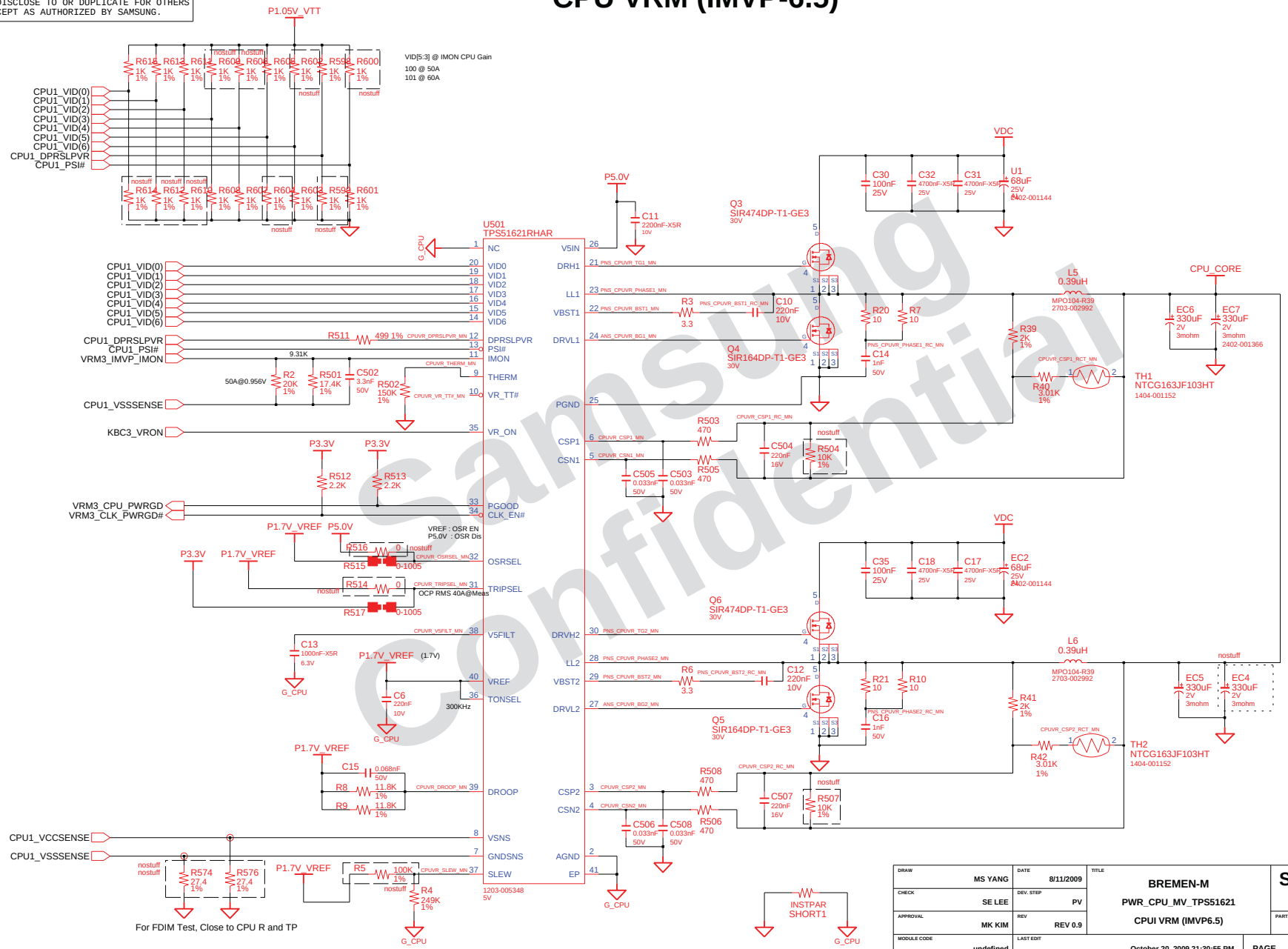

DRAW: MS YANG	DATE: 8/11/2009	TITLE: BREMEN-M PWR_CPU_MV_TPS51621 CPUI VRM (IMVP6.5)	SAMSUNG ELECTRONICS
CHECK: SE LEE	DEV. STEP: PV		PART NO. BA41-01174A
APPROVAL: MK KIM	REV: REV 0.9		
MODULE CODE: undefined	LAST EDIT: October 20, 2009 21:30:55 PM		PAGE 50 OF 56

SAMSUNG PROPRIETARY
THIS DOCUMENT CONTAINS CONFIDENTIAL PROPRIETARY INFORMATION THAT IS SAMSUNG ELECTRONICS CO'S PROPERTY. DO NOT DISCLOSE TO OR DUPLICATE FOR OTHERS EXCEPT AS AUTHORIZED BY SAMSUNG.

External Graphic Core Power

31.66A @N11P-GE1&gDDR3
16.77A @N11M-GE1&gDDR3
29.48A @N10P-GE&gDDR3
14.72A @N10M-GE&gDDR3

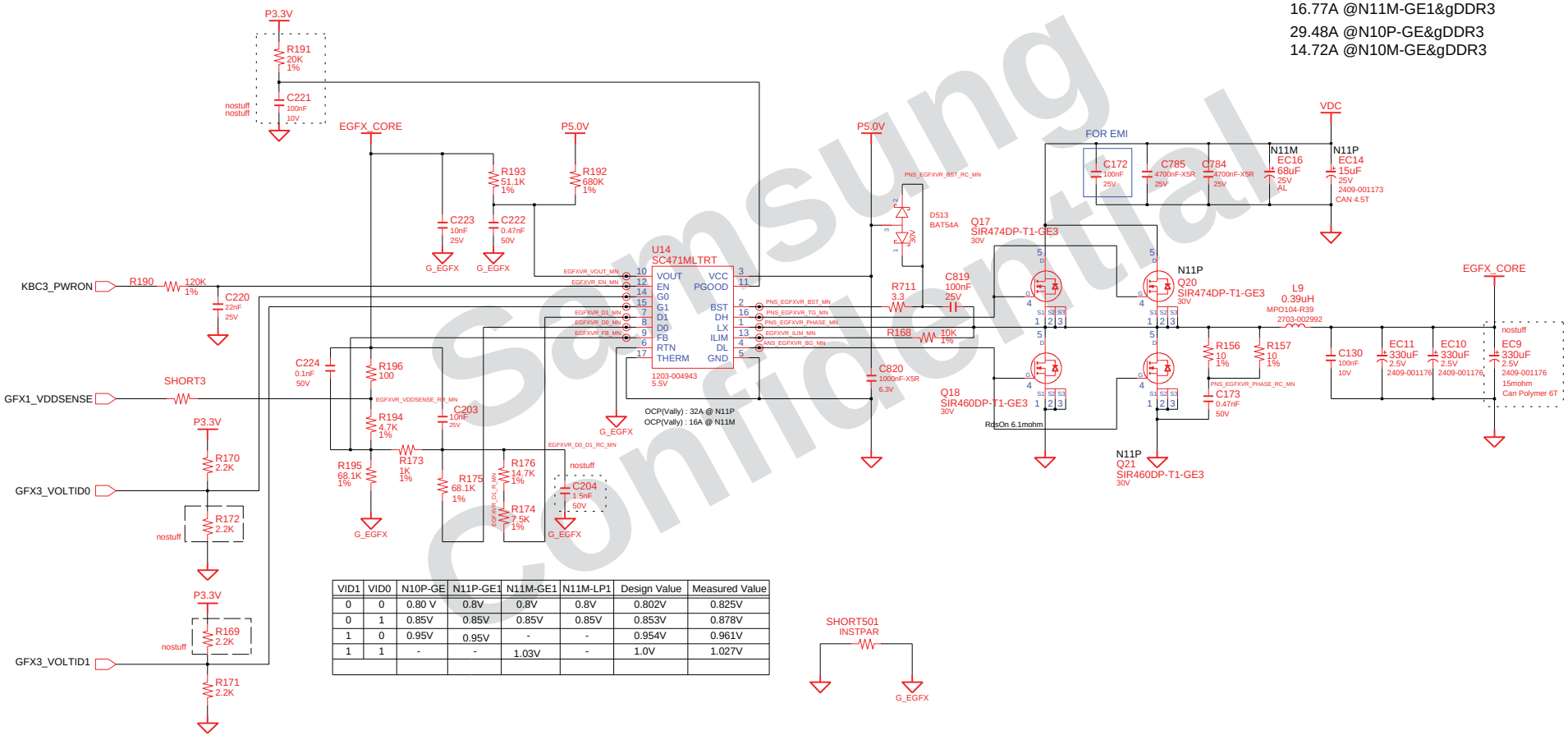

VID1	VID0	N10P-GE	N11P-GE1	N11M-GE1	N11M-LP1	Design Value	Measured Value
0	0	0.80 V	0.8V	0.8V	0.8V	0.802V	0.825V
0	1	0.85V	0.85V	0.85V	0.85V	0.853V	0.878V
1	0	0.95V	0.95V	-	-	0.954V	0.961V
1	1	-	-	1.03V	-	1.0V	1.027V

DESIGN: MS YANG	DATE: 8/11/2009	TITLE: BREMEN-M PWR_GFX_MV_EXT External Graphic Power	SAMSUNG ELECTRONICS
CHECK: SE LEE	DEV. STEP: PV		
APPROVAL: MK KIM	REV: REV 0.9		PART NO. BA41-01174A
MODULE CODE	LAST EDIT: October 20, 2009 21:30:55 PM		PAGE 51 OF 56

SAMSUNG PROPRIETARY
THIS DOCUMENT CONTAINS CONFIDENTIAL PROPRIETARY INFORMATION THAT IS SAMSUNG ELECTRONICS CO'S PROPERTY. DO NOT DISCLOSE TO OR DUPLICATE FOR OTHERS EXCEPT AS AUTHORIZED BY SAMSUNG.

Switched Power

Switched Power On (P3.3V)

Multi@AP2607GY,Si3433BDV

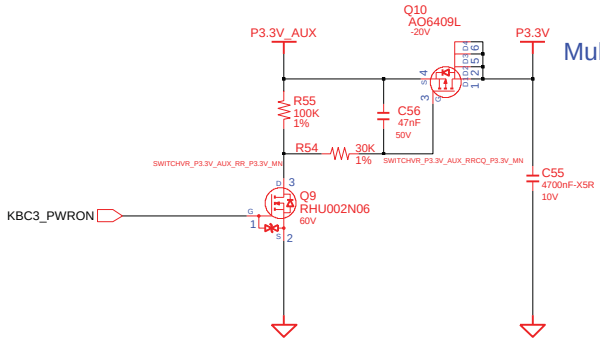

Sleep'n Charger

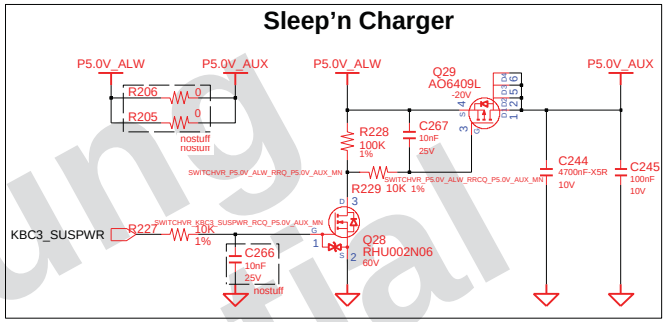

Switched Power On (P1.5V)

Multi@AP6680BGM,AO4476L

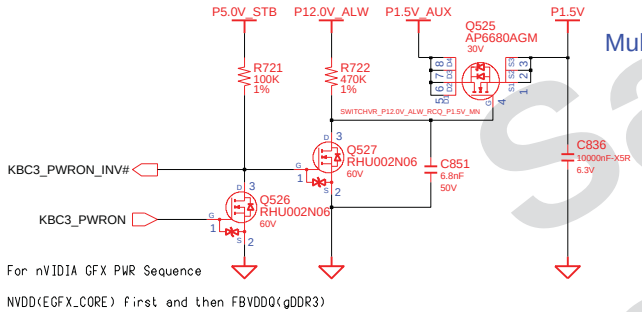

P1.8V(LDO)

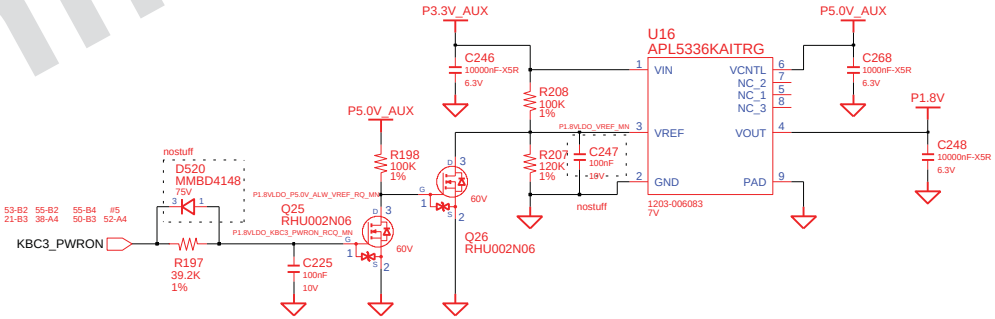

Switched Power On (P5.0V)

Multi@Si443DDY

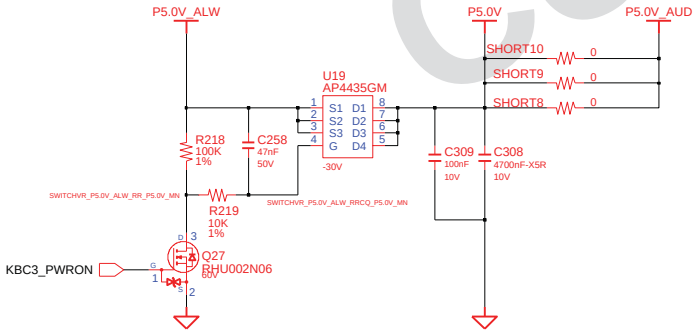

Samsung Confidential

DRAW: MS YANG	DATE: 8/11/2009	TITLE: BREMEN-M PWR_MV_SWITCHED SWITCHED POWER	SAMSUNG ELECTRONICS
CHECK: SE LEE	DEV. STEP: PV		
APPROVAL: MK KIM	REV: REV 0.9		PART NO.: BA41-01174A
MODULE CODE	LAST EDIT: October 20, 2009 21:30:55 PM		PAGE 52 OF 56

SAMSUNG PROPRIETARY
THIS DOCUMENT CONTAINS CONFIDENTIAL PROPRIETARY INFORMATION THAT IS SAMSUNG ELECTRONICS CO'S PROPERTY. DO NOT DISCLOSE TO OR DUPLICATE FOR OTHERS EXCEPT AS AUTHORIZED BY SAMSUNG.

POWER DISCHARGER

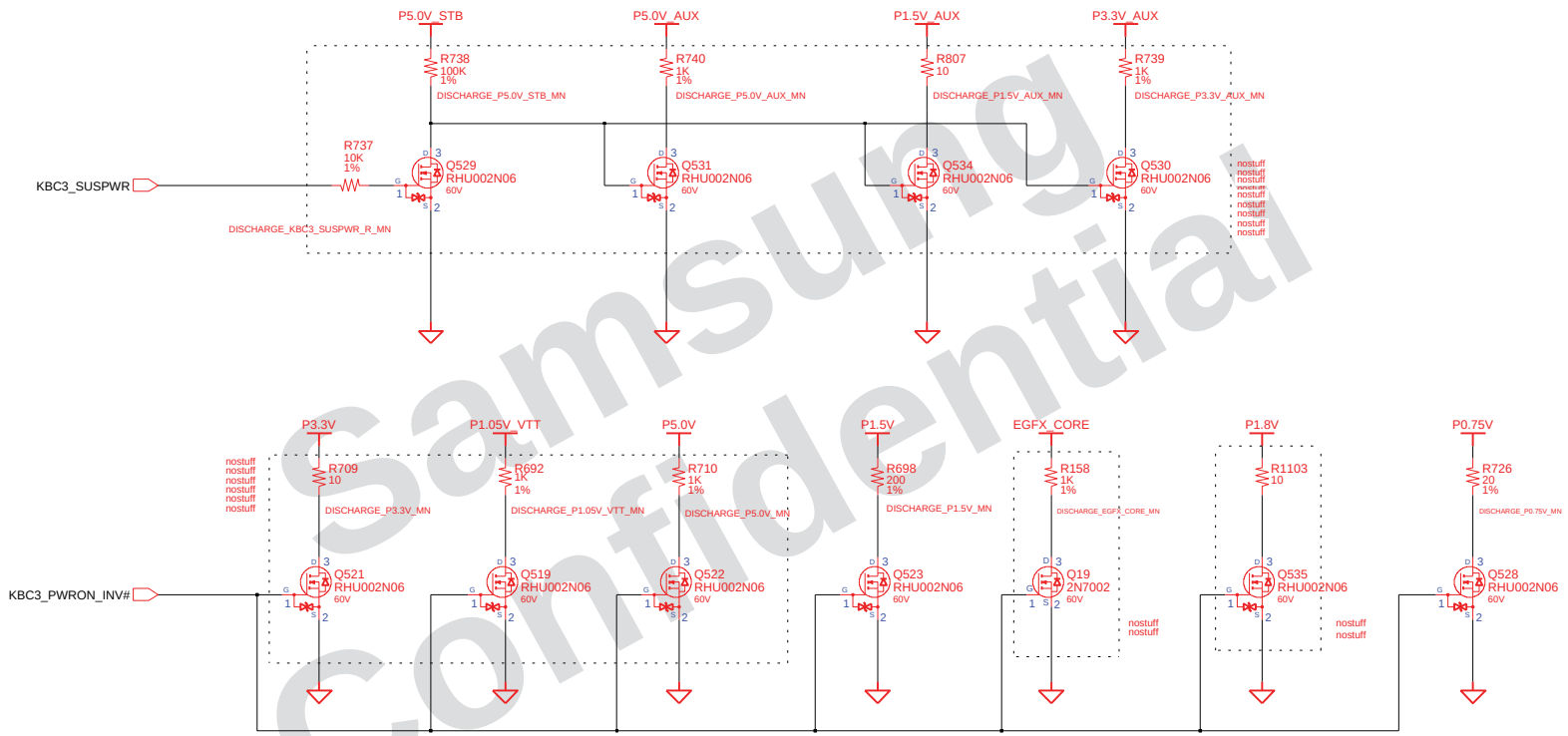

Samsung Confidential

DRAW: MS YANG	DATE: 8/11/2009	TITLE: BREMEN-M	SAMSUNG ELECTRONICS
CHECK: SE LEE	DEV. STEP: PV	PWR_MV_DISCHARGER	
APPROVAL: MK KIM	REV: REV 0.9	DISCHARGING LOGIC	PART NO.: BA41-01174A
MODULE CODE: undefined	LAST EDIT: October 20, 2009 21:30:55 PM		PAGE 53 OF 56

SAMSUNG PROPRIETARY
THIS DOCUMENT CONTAINS CONFIDENTIAL PROPRIETARY INFORMATION THAT IS SAMSUNG ELECTRONICS CO'S PROPERTY. DO NOT DISCLOSE TO OR DUPLICATE FOR OTHERS EXCEPT AS AUTHORIZED BY SAMSUNG.

2 USB PORT & POWER S/W SUB B'D

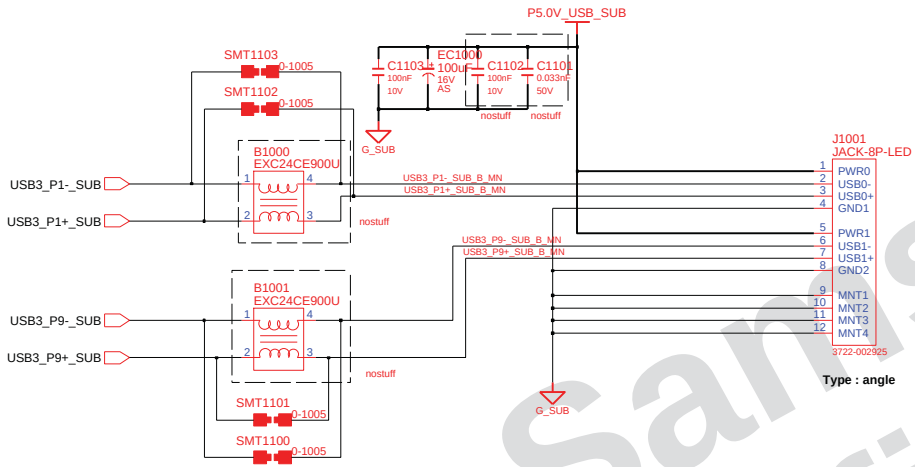

SUB TO MAIN USB CONN

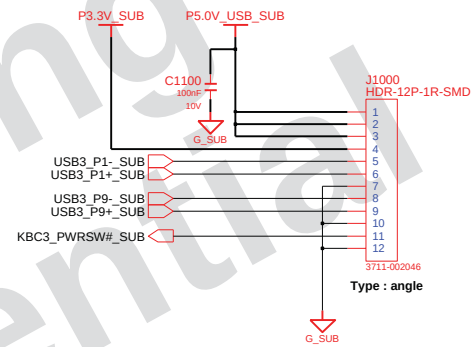

Power ON LED

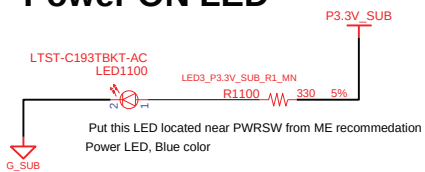

Put this LED located near PWRSW from ME recommedation
Power LED, Blue color

Power Button

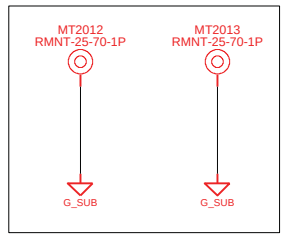

USB sub board mount hole

Samsung Confidential

DESIGN: MS YANG	DATE: 8/11/2009	TITLE: BREMEN-M SUB BOARD1 2 USB & POWER SW	SAMSUNG ELECTRONICS
CHECK: SE LEE	DEV. STEP: PV		
APPROVAL: MK KIM	REV: REV 0.9		PART NO.: BA41-01174A
MODULE CODE	LAST EDIT: October 20, 2009 21:30:55 PM		PAGE 54 OF 56

SAMSUNG PROPRIETARY
THIS DOCUMENT CONTAINS CONFIDENTIAL PROPRIETARY INFORMATION THAT IS SAMSUNG ELECTRONICS CO'S PROPERTY. DO NOT DISCLOSE TO OR DUPLICATE FOR OTHERS EXCEPT AS AUTHORIZED BY SAMSUNG.

SATA ODD SUB BOARD

SATA ODD SUB BOARD

SATA ODD CONN

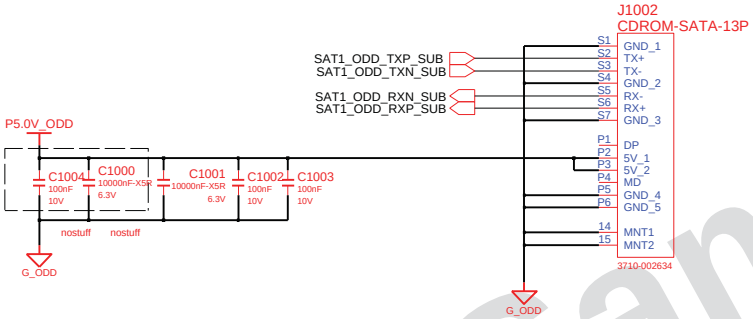

SUB TO MAIN SATA ODD CONN

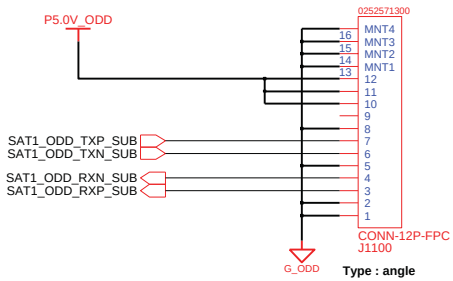

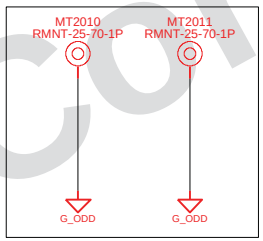

ODD sub board mount hole

17" BATTERY SUBBOARD

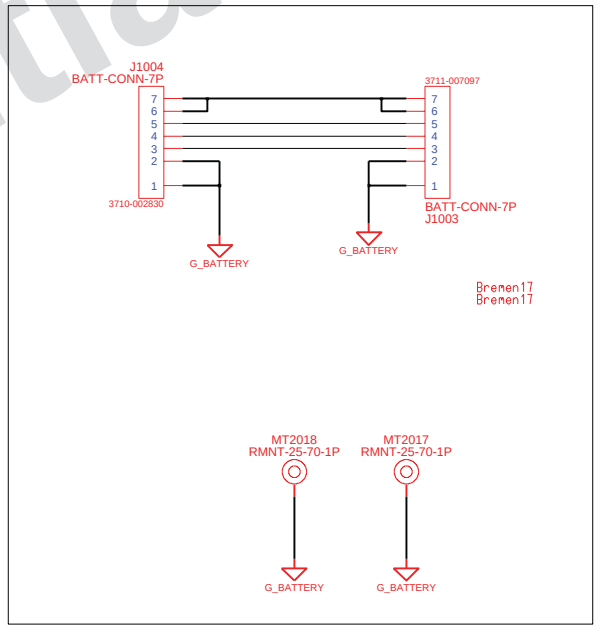

Samsung Confidential

DRAW: MS YANG	DATE: 8/11/2009	TITLE: BREMEN-M SUB BOARD2 SATA ODD SUB BOARD	SAMSUNG ELECTRONICS
CHECK: SE LEE	DEV. STEP: PV		
APPROVAL: MK KIM	REV: REV 0.9		PART NO.: BA41-01174A
MODULE CODE: undefined	LAST EDIT: October 20, 2009 21:30:55 PM		PAGE 55 OF 56

SAMSUNG PROPRIETARY
THIS DOCUMENT CONTAINS CONFIDENTIAL
PROPRIETARY INFORMATION THAT IS
SAMSUNG ELECTRONICS CO'S PROPERTY.
DO NOT DISCLOSE TO OR DUPLICATE FOR OTHERS
EXCEPT AS AUTHORIZED BY SAMSUNG.

ICT PORT

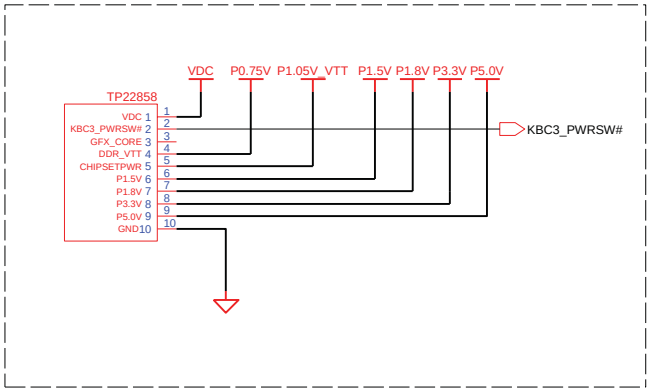

Mainboard Mount ((30,80)x9), (30,90)x9), (25,70)x1))

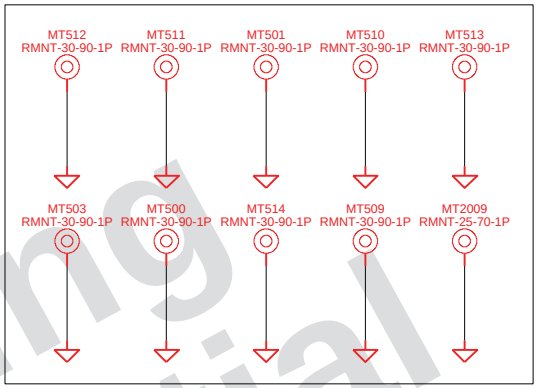

Top : (30,80) x 9
Bot : (30,90) x 9

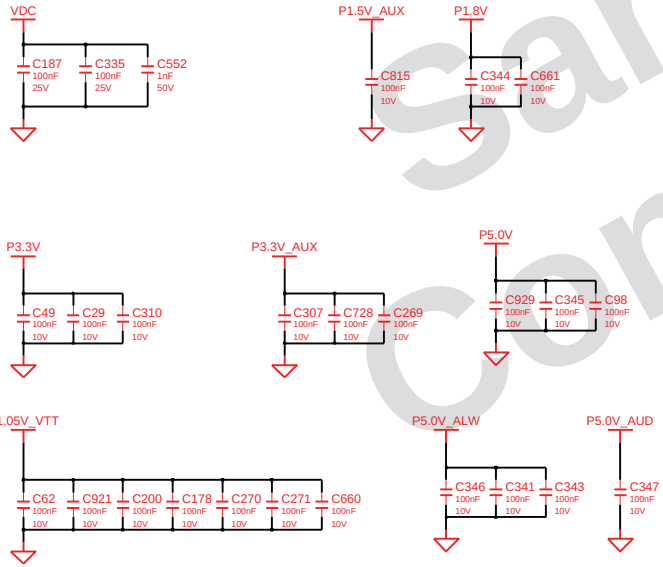

Samsung Confidential

DRAW: MS YANG	DATE: 8/11/2009	TITLE: BREMEN-M ICT PORT ICT PORT	SAMSUNG ELECTRONICS
CHECK: SE LEE	DEV. STEP: PV		
APPROVAL: MK KIM	REV: REV 0.9		PART NO. BA41-01174A
MODULE CODE	LAST EDIT: October 20, 2009 21:30:55 PM		PAGE 56 OF 56