Schematics Page Index (Title / Revision / Change Date)

Page	Title of Schematics Page	Rev.	Date
01	Schematics Page Index	SC	20070316
02	Block Diagram		
03	Merom(HOST BUS) 1/2		
04	Merom(HOST BUS) 2/3		
05	Merom(Power/Gnd) 3/3		
06	CLOCK GEN		
07	Crestline (HOST) 1/7		
08	Crestline (DMI) 2/7		
09	Crestline (GRAPHIC) 3/7		
10	Crestline (DDRII) 4/7		
11	Crestline (POWER,VCC) 5/7		
12	Crestline (VCC CORE) 6/7		
13	Crestline (VSS) 7/7		
14	DDRII(SO-DIMM_0) 1/3		
15	DDRII(SO-DIMM_1) 2/3		
16	DDRII(Termination) 3/3		
17	LVDS		
18	ICH8-M(PCI/USB) 1/5		
19	ICH8-M(LPC,IDE,SATA)2/5		
20	ICH8-M(GPIO) 3/5		
21	ICH8-M(POWER) 4/5		
22	ICH8-M(GND) 5/5		
23	SATA HDD/CD-ROM		
24	EC+KBC(ENE3910C)		
25	Flash ROM/XBUS		
26	Mini-PCIE Card		
27	FAN/HW THERMAL PROTECT		
28	EXPRESS/CAM/OIDE		
29	PCI (PCI BUS) / TV-Tuner		
30	PCI (ILINK)		
31	PCI (MS-DUO/MDC)		
32	PCI (PCMCIA)		
33	USB2.0		
34	LAN (1/2)		
35	LAN (2/2)		

Page	Title of Schematics Page	Rev.	Date
36	Power Design Diagram		
37	Charger (MAX1909)		
38	DCIN		
39	SYSPWR(+3VALW/+5VALW)		
40	SYSPWR(+1_5VRUN/+1_05VRUN)		
41	DDR2PWR(+1_8V_SUS/+0_9VRUN)		
42	VHCORE(ISL6262A)		
43	Others power plan		
44	OVP protection		
45	GMCH POWER		
46	HOLE/DB CONNS		
47	Audio Board /Audio Jack		
48	CRT		
49	History (EVT)		
50	History (EVT2)		
51	History (DVT)		
52	History (PVT)		

Value	M620GM	M620GML
NC_		

P. Leader	Check by	Design by

PCB P/N: 1P-0075503-6010
1P-0075103-6010

Project Code & Schematics Subject: M620 Main Board

FOXCONN HON HAI PRECISION IND. CO., LTD.
CPBG - R&D Division

Title: ***Index Page***

Size: Custom | Document Number: **M620-L** | Rev: 1.0

Date: Friday, June 08, 2007 | Sheet 1 of 52

MBX-178 M620 Block Diagram (15.4" Wide Screen)

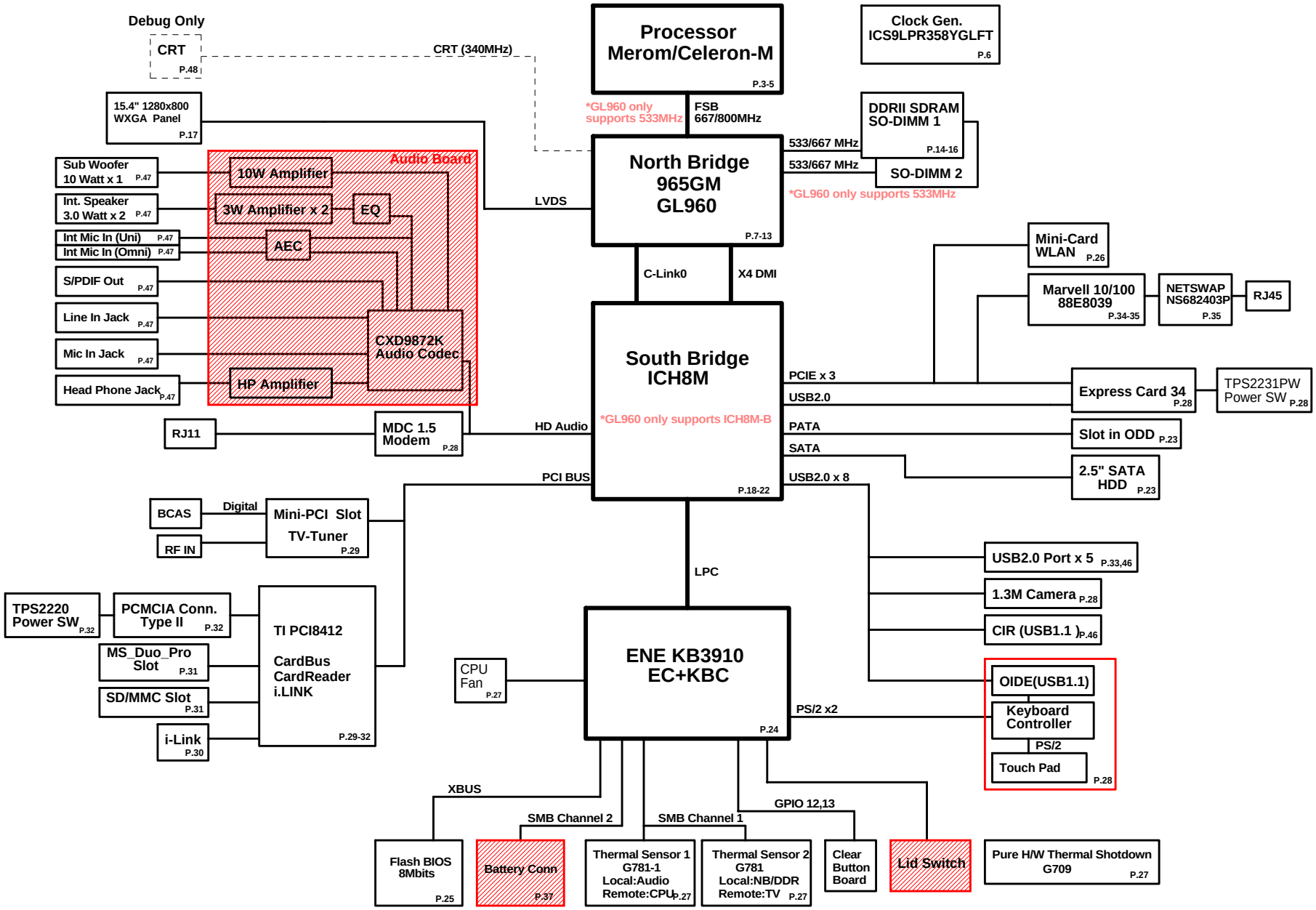

MAXIM CHARGER MAX1909	
INPUTS	OUTPUTS
DC_IN	BT+ DCBATOUT

SYSTEM DC/DC MAX8734A P.39	
INPUTS	OUTPUTS
DCBATOUT	+5VALW +5VALW_LDO +3VALW +ECVCC

SYSTEM DC/DC SC339/OZ811 P.40	
INPUTS	OUTPUTS
+1_8V_S3_SUS DCBATOUT	+1_5VRUN +1_05VRUN

SYSTEM DC/DC SC486 P.41	
DCBATOUT	+1_8V_S3_SUS +0_9VSUS

CPU DC/DC ISL6262A P.42	
INPUTS	OUTPUTS
DCBATOUT	VHCORE

SYSTEM DC/DC GMT966 P.43	
INPUTS	OUTPUTS
+1_8V_S3_SUS	+1_25VRUN

SYSTEM DC/DC SC472B GMCH core power P.45	
INPUTS	OUTPUTS
DCBATOUT	+VGFX_CORE

FOXCONN HON HAI PRECISION IND. CO., LTD.
CPBG - R&D Division

Title: *Block Diagram (All)*

Size: Custom | Document Number: M620-L | Rev: 1.0

Date: Friday, June 08, 2007 | Sheet 2 of 52

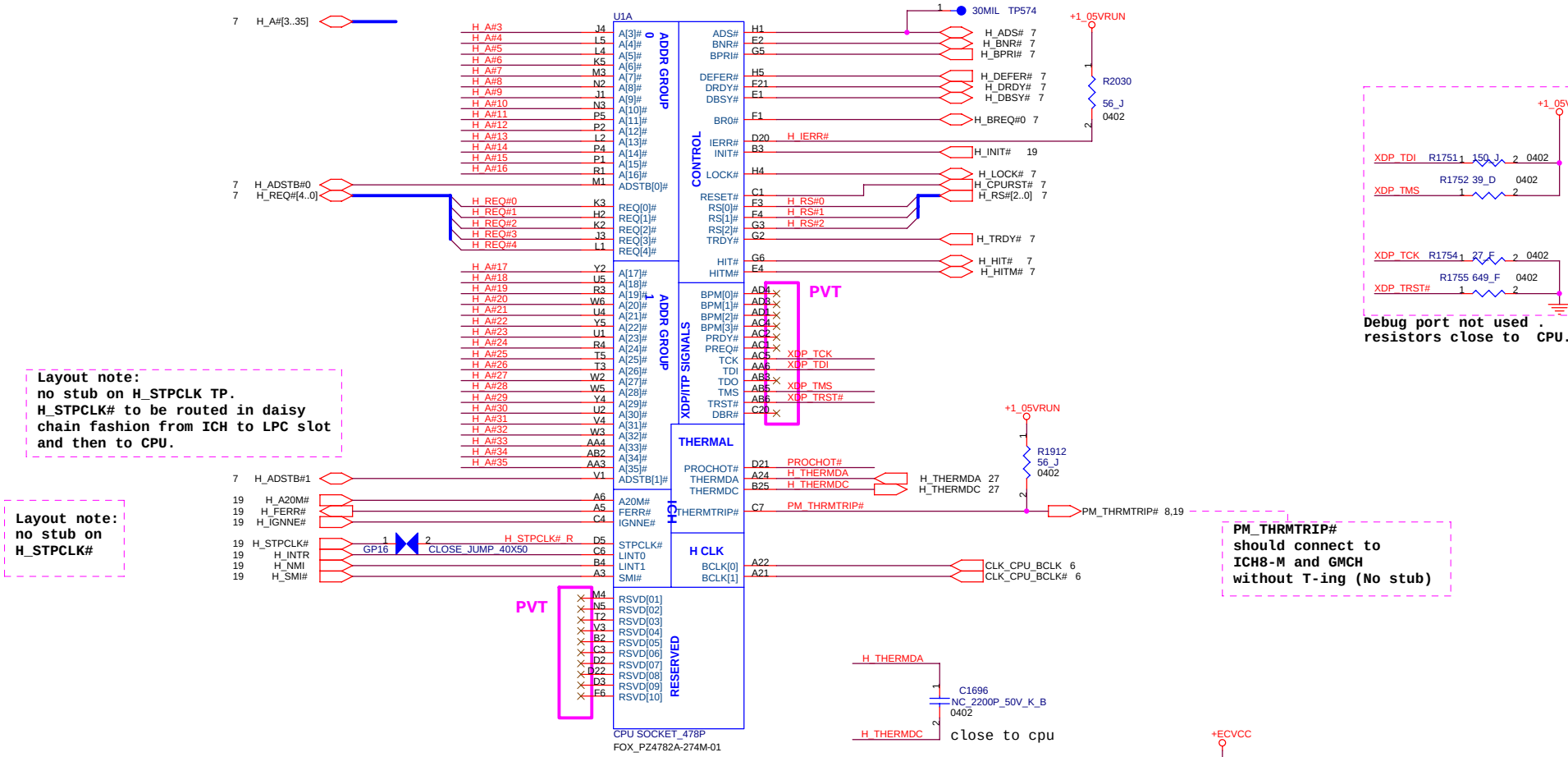

FOXCONN	HON HAI PRECISION IND. CO., LTD. CPBG - R&D Division
Title	*Merom (HOST BUS) 1/3*
Size A3	Document Number **M620-L** Rev 1.0
Date: Friday, June 08, 2007	Sheet 3 of 52

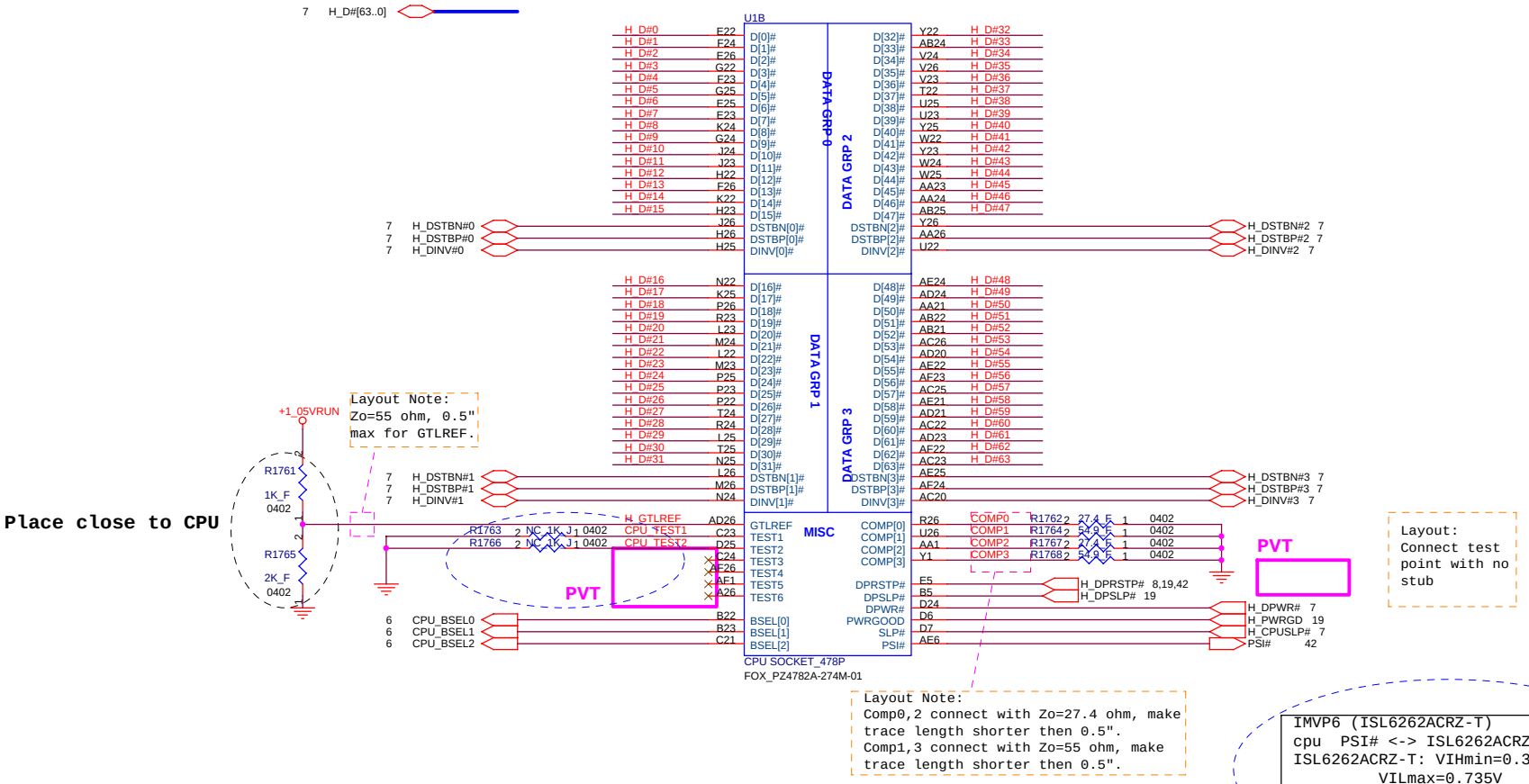

FSB Frequency Table:

BSEL[2:0]	Freq.(MHz)
L L L	266MHz
L L H	133MHz
L H H	166MHz
L H L	200MHz
H H L	400MHz
H H H	Reserve
H L H	100MHz
H L L	333MHz

FOXCONN HON HAI PRECISION IND. CO., LTD.
CPBG - R&D Division

Title: *Merom (HOST BUS) 2/3*

Size: A3 | Document Number: **M620-L** | Rev: 1.0

Date: Friday, June 08, 2007 | Sheet 4 of 52

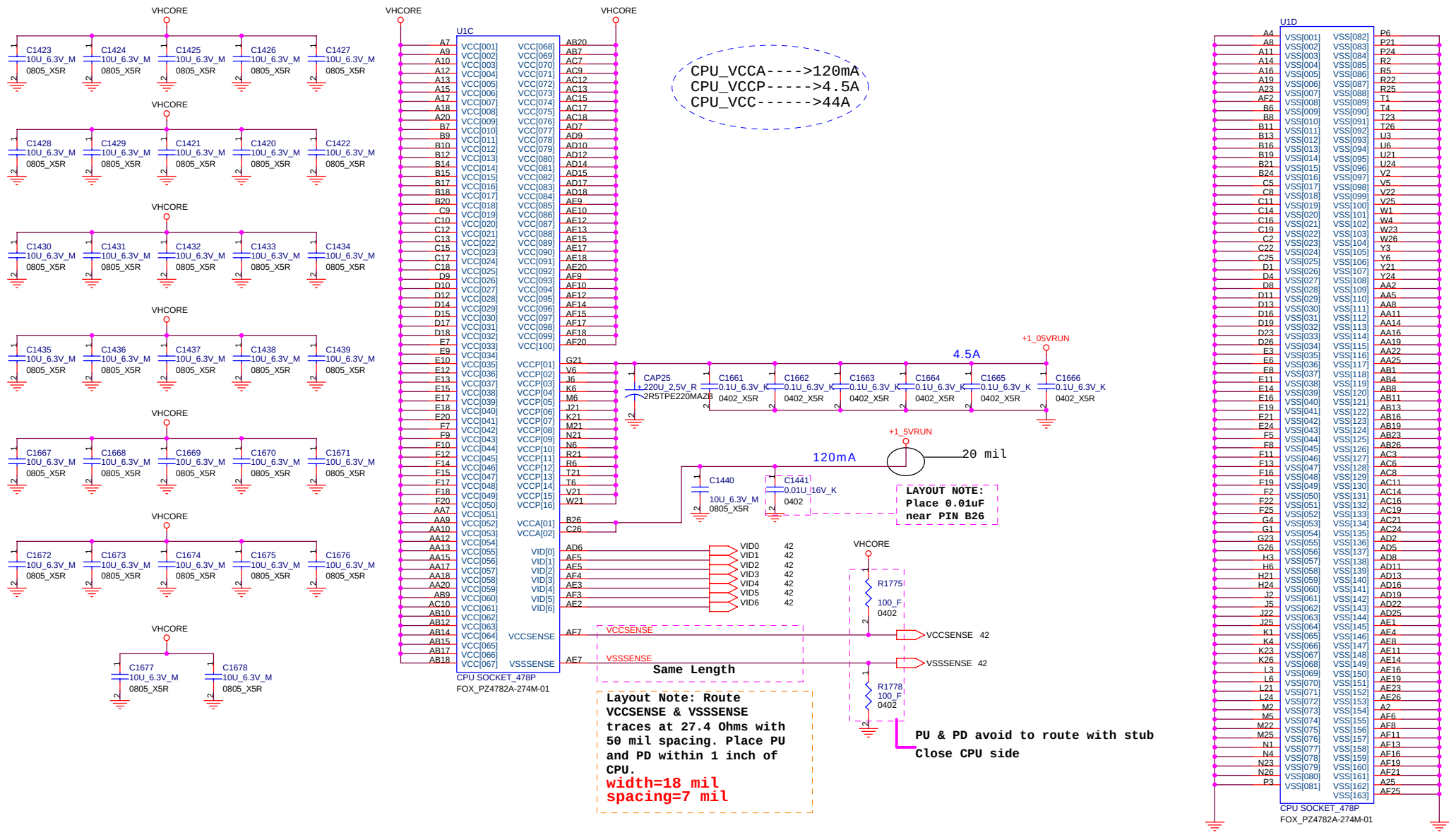

FOXCONN	HON HAI PRECISION IND. CO., LTD. CPBG - R&D Division	
Title	*Merom (POWER/GROUND) 3/3*	
Size A3	Document Number **M620-L**	Rev 1.0
Date: Friday, June 08, 2007	Sheet 5 of 52	

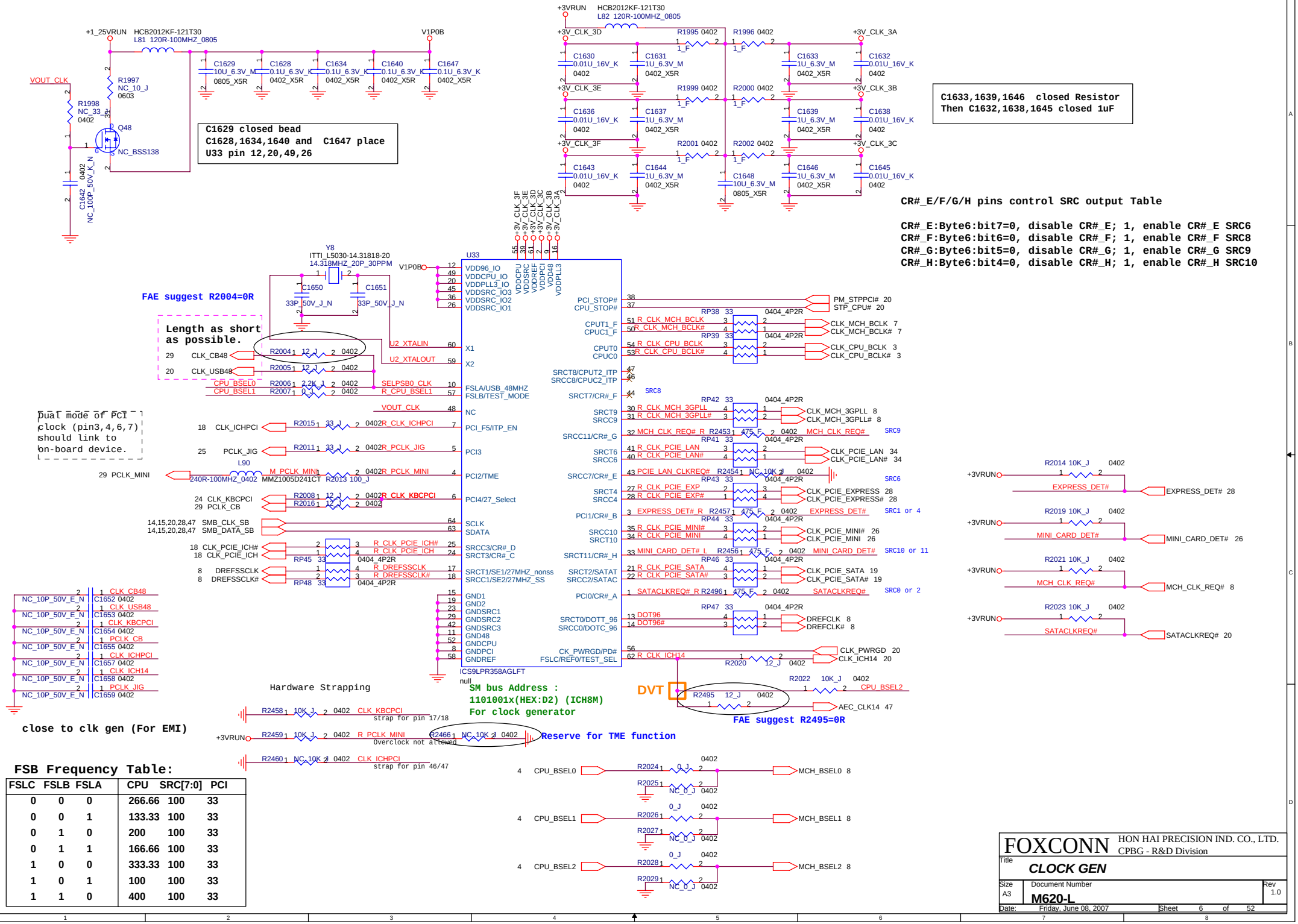
+1_25VRUN HCB2012KF-121T30 L81 120R-100MHZ_0805
V1P0B
VOUT_CLK
R1997 NC_10_J 0603
R1998 NC_33_J 0402
Q48 NC_BSS138
C1642 0402 NC_100P_50V_K_N
C1629 10U_6.3V_M 0805_X5R
C1628 0.1U_6.3V_K 0402_X5R
C1634 0.1U_6.3V_K 0402_X5R
C1640 0.1U_6.3V_K 0402_X5R
C1647 0.1U_6.3V_K 0402_X5R
C1629 closed bead
C1628,1634,1640 and C1647 place
U33 pin 12,20,49,26
+3VRUN HCB2012KF-121T30 L82 120R-100MHZ_0805
+3V_CLK_3D
+3V_CLK_3A
+3V_CLK_3E
+3V_CLK_3B
+3V_CLK_3F
+3V_CLK_3C
R1995 0402 1_F
R1996 0402 1_F
R1999 0402 1_F
R2000 0402 1_F
R2001 0402 1_F
R2002 0402 1_F
C1630 0.01U_16V_K 0402
C1631 1U_6.3V_M 0402_X5R
C1633 1U_6.3V_M 0402_X5R
C1632 0.01U_16V_K 0402
C1636 0.01U_16V_K 0402
C1637 1U_6.3V_M 0402_X5R
C1639 1U_6.3V_M 0402_X5R
C1638 0.01U_16V_K 0402
C1643 0.01U_16V_K 0402
C1644 1U_6.3V_M 0402_X5R
C1648 10U_6.3V_M 0805_X5R
C1646 1U_6.3V_M 0402_X5R
C1645 0.01U_16V_K 0402
C1633,1639,1646 closed Resistor
Then C1632,1638,1645 closed 1uF
CR#_E/F/G/H pins control SRC output Table
CR#_E:Byte6:bit7=0, disable CR#_E; 1, enable CR#_E SRC6
CR#_F:Byte6:bit6=0, disable CR#_F; 1, enable CR#_F SRC8
CR#_G:Byte6:bit5=0, disable CR#_G; 1, enable CR#_G SRC9
CR#_H:Byte6:bit4=0, disable CR#_H; 1, enable CR#_H SRC10
Y8 ITTI_L5030-14.31818-20 14.318MHZ_20P_30PPM
C1650 33P_50V_J_N
C1651 33P_50V_J_N
FAE suggest R2004=0R
Length as short as possible.
R2004 12_J 0402
R2005 12_J 0402
R2006 2.2K_J 0402
R2007 0_J 0402
U2_XTALIN
U2_XTALOUT
CPU_BSEL0
CPU_BSEL1
SELPSB0_CLK
R_CPU_BSEL1
VOUT_CLK
Dual mode of PCI clock (pin3,4,6,7) should link to on-board device.
R2015 33_J 0402 R_CLK_ICHPCI
R2011 33_J 0402 R_PCLK_JIG
L90 240R-100MHZ_0402
M_PCLK_MINI R2013 100_J 0402 R_PCLK_MINI
R2008 12_J 0402 R_CLK_KBCPCI
R2016 12_J 0402
SMB_CLK_SB
SMB_DATA_SB
RP45 33 0404_4P2R
R_CLK_PCIE_ICH#
R_CLK_PCIE_ICH
RP48 33 0404_4P2R
R_DREFSSCLK
R_DREFSSCLK#
U33
VDD96_IO
VDDCPU_IO
VDDPLL3_IO
VDDSRC_IO3
VDDSRC_IO2
VDDSRC_IO1
X1
X2
FSLA/USB_48MHZ
FSLB/TEST_MODE
NC
PCI_F5/ITP_EN
PCI3
PCI2/TME
PCI4/27_Select
SCLK
SDATA
SRCC3/CR#_D
SRCT3/CR#_C
SRCT1/SE1/27MHZ_nonss
SRCC1/SE2/27MHZ_SS
GND1
GND2
GNDSRC1
GNDSRC2
GNDSRC3
GND48
GNDCPU
GNDPCI
GNDREF
ICS9LPR358AGLFT
null
PCI_STOP#
CPU_STOP#
CPUT1_F
CPUC1_F
CPUT0
CPUC0
SRCT8/CPUT2_ITP
SRCC8/CPUC2_ITP
SRCT7/CR#_F
SRCT9
SRCC9
SRCC11/CR#_G
SRCT6
SRCC6
SRCC7/CR#_E
SRCT4
SRCC4
PCI1/CR#_B
SRCC10
SRCT10
SRCT11/CR#_H
SRCT2/SATAT
SRCC2/SATAC
PCI0/CR#_A
SRCT0/DOTT_96
SRCC0/DOTC_96
CK_PWRGD/PD#
FSLC/REF0/TEST_SEL
PM_STPPCI# 20
STP_CPU# 20
RP38 33 0404_4P2R
R_CLK_MCH_BCLK
R_CLK_MCH_BCLK#
CLK_MCH_BCLK 7
CLK_MCH_BCLK# 7
RP39 33 0404_4P2R
R_CLK_CPU_BCLK
R_CLK_CPU_BCLK#
CLK_CPU_BCLK 3
CLK_CPU_BCLK# 3
SRC8
RP42 33 0404_4P2R
R_CLK_MCH_3GPLL
R_CLK_MCH_3GPLL#
CLK_MCH_3GPLL 8
CLK_MCH_3GPLL# 8
MCH_CLK_REQ# R2453 475_F 0402 MCH_CLK_REQ#
SRC9
RP41 33 0404_4P2R
R_CLK_PCIE_LAN
R_CLK_PCIE_LAN#
CLK_PCIE_LAN 34
CLK_PCIE_LAN# 34
PCIE_LAN_CLKREQ# R2454 NC_10K_J 0402
SRC6
RP43 33 0404_4P2R
R_CLK_PCIE_EXP
R_CLK_PCIE_EXP#
CLK_PCIE_EXPRESS 28
CLK_PCIE_EXPRESS# 28
EXPRESS_DET# R2457 475_F 0402 EXPRESS_DET#
SRC1 or 4
RP44 33 0404_4P2R
R_CLK_PCIE_MINI#
R_CLK_PCIE_MINI
CLK_PCIE_MINI# 26
CLK_PCIE_MINI 26
MINI_CARD_DET# R2456 475_F 0402 MINI_CARD_DET#
SRC10 or 11
RP46 33 0404_4P2R
R_CLK_PCIE_SATA
R_CLK_PCIE_SATA#
CLK_PCIE_SATA 19
CLK_PCIE_SATA# 19
SATACLKREQ# R2496 475_F 0402 SATACLKREQ#
SRC0 or 2
RP47 33 0404_4P2R
DOT96
DOT96#
DREFCLK 8
DREFCLK# 8
R_CLK_ICH14
R2020 12_J 0402
CLK_PWRGD 20
CLK_ICH14 20
R2014 10K_J 0402
EXPRESS_DET#
EXPRESS_DET# 28
R2019 10K_J 0402
MINI_CARD_DET#
MINI_CARD_DET# 26
R2021 10K_J 0402
MCH_CLK_REQ#
MCH_CLK_REQ# 8
R2023 10K_J 0402
SATACLKREQ#
SATACLKREQ# 20
+3VRUN
DVT
R2495 12_J 0402
R2022 10K_J 0402
CPU_BSEL2
AEC_CLK14 47
FAE suggest R2495=0R
CLK_CB48
CLK_USB48
CLK_KBCPCI
PCLK_CB
CLK_ICHPCI
CLK_ICH14
PCLK_JIG
NC_10P_50V_E_N
C1652 0402
C1653 0402
C1654 0402
C1655 0402
C1657 0402
C1658 0402
C1659 0402
close to clk gen (For EMI)
Hardware Strapping
R2458 10K_J 0402 CLK_KBCPCI
strap for pin 17/18
R2459 10K_J 0402 R_PCLK_MINI
Overclock not allowed
R2466 NC_10K_J 0402
Reserve for TME function
R2460 NC_10K_J 0402 CLK_ICHPCI
strap for pin 46/47
SM bus Address :
1101001x(HEX:D2) (ICH8M)
For clock generator
CPU_BSEL0
CPU_BSEL1
CPU_BSEL2
R2024 0_J 0402
R2025 NC_0_J 0402
R2026 0_J 0402
R2027 NC_0_J 0402
R2028 0_J 0402
R2029 NC_0_J 0402
MCH_BSEL0 8
MCH_BSEL1 8
MCH_BSEL2 8
FSB Frequency Table:
FSLC FSLB FSLA CPU SRC[7:0] PCI
0 0 0 266.66 100 33
0 0 1 133.33 100 33
0 1 0 200 100 33
0 1 1 166.66 100 33
1 0 0 333.33 100 33
1 0 1 100 100 33
1 1 0 400 100 33
FOXCONN
HON HAI PRECISION IND. CO., LTD.
CPBG - R&D Division
Title
CLOCK GEN
Size A3
Document Number
M620-L
Rev 1.0
Date: Friday, June 08, 2007
Sheet 6 of 52

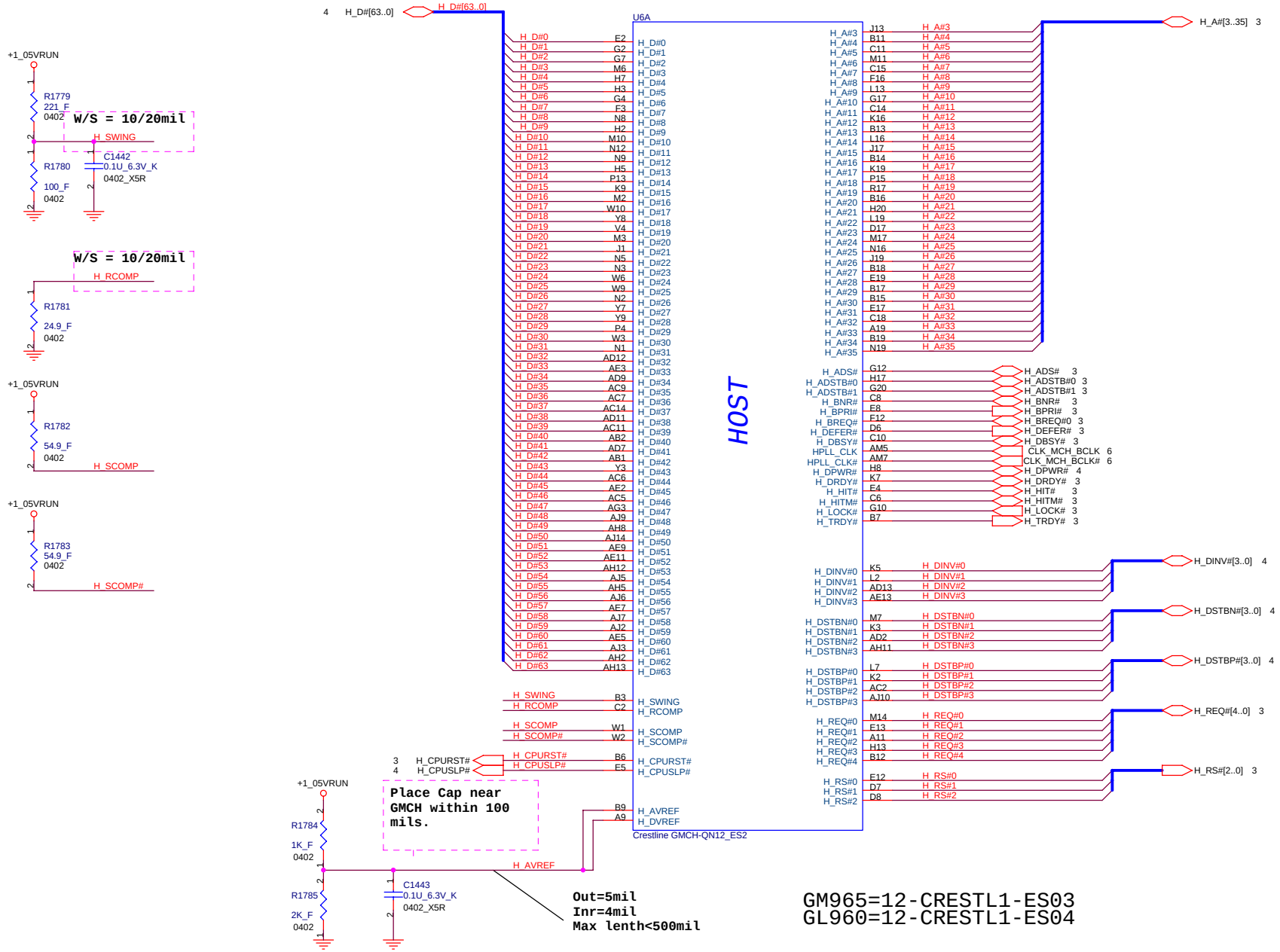

FOXCONN	HON HAI PRECISION IND. CO., LTD. CPBG - R&D Division	
Title	*Crestline (HOST) 1/of 7*	
Size A3	Document Number **M620-L**	Rev 1.0
Date: Friday, June 08, 2007	Sheet 7 of 52	

Notes:
CFG[17:3] = Internal Pull-ups
CFG[19:18] = Internal Pull-downs

MCH_CFG_[2:0] (FSB Frequency)	[2:0] = 010 = 800MT/s [2:0] = 011 = 667MT/s [2:0] = 001 = 533MT/s
MCH_CFG_5 (DMI Type)	Low = DMIx2 High = DMIx4 (Default)
MCH_CFG_7 (Intel Management Engine Crypto Strap)	Low = Intel Management Engine Crypto Transport Layer Security (TLS cipher suite with no confidentiality High = Intel Management Engine Crypto TLS cipher suite with confidentiality(Default)
MCH_CFG_9 (PCIE Graphics Lane)	Low = Reverse Lane High = Normal operation (Default)
MCH_CFG_[13:12] (Test Mode Type)	[13:12] = 11 = Normal Operating (Default) [13:12] = 10 = All Z Mode [13:12] = 01 = XOR Mode [13:12] = 00 = Reserved
MCH_CFG_16 (FSB Dynamic ODT)	Low = Dynamic ODT Disabled High = Dynamic ODT Enable (Default)
MCH_CFG_19 (DMI Lane Reversal)	Low = Normal operation (Default) High = Lane Reversed
MCH_CFG_20 (Concurrent SDVO/PCIe)	Low = Only SDVO or PCIe is operational (Default) High = SDVO & PCIe operate simultaneously through the PCI Express Graphics attach port

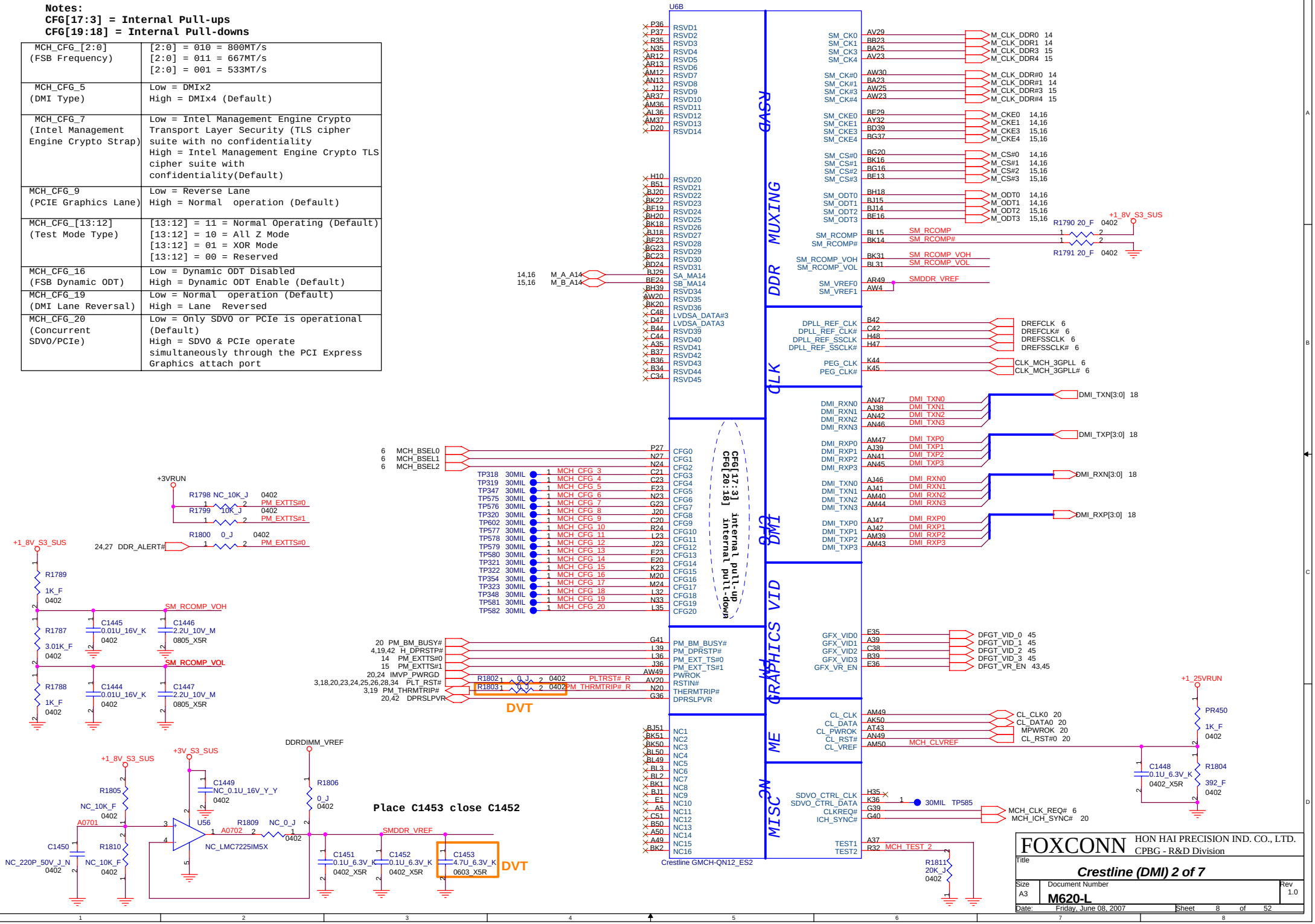

FOXCONN HON HAI PRECISION IND. CO., LTD.
CPBG - R&D Division

Title: **Crestline (DMI) 2 of 7**

Size: A3 | Document Number: **M620-L** | Rev: 1.0

Date: Friday, June 08, 2007 | Sheet 8 of 52

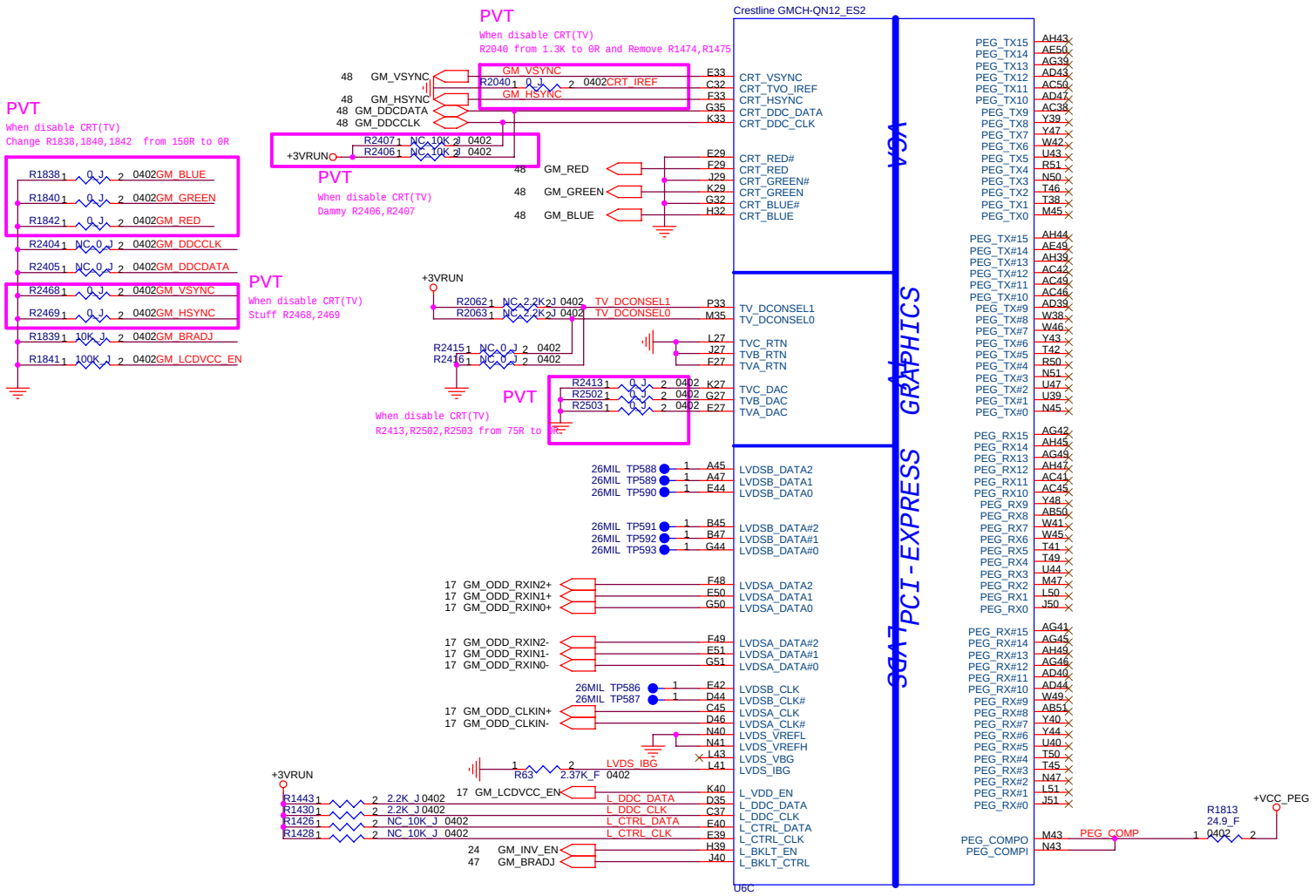

FOXCONN HON HAI PRECISION IND. CO., LTD.
CPBG - R&D Division

Title: **Crestline (DMI) 3 of 7**

Size: A3 | Document Number: **M620-L** | Rev: 1.0

Date: Friday, June 08, 2007 | Sheet 9 of 52

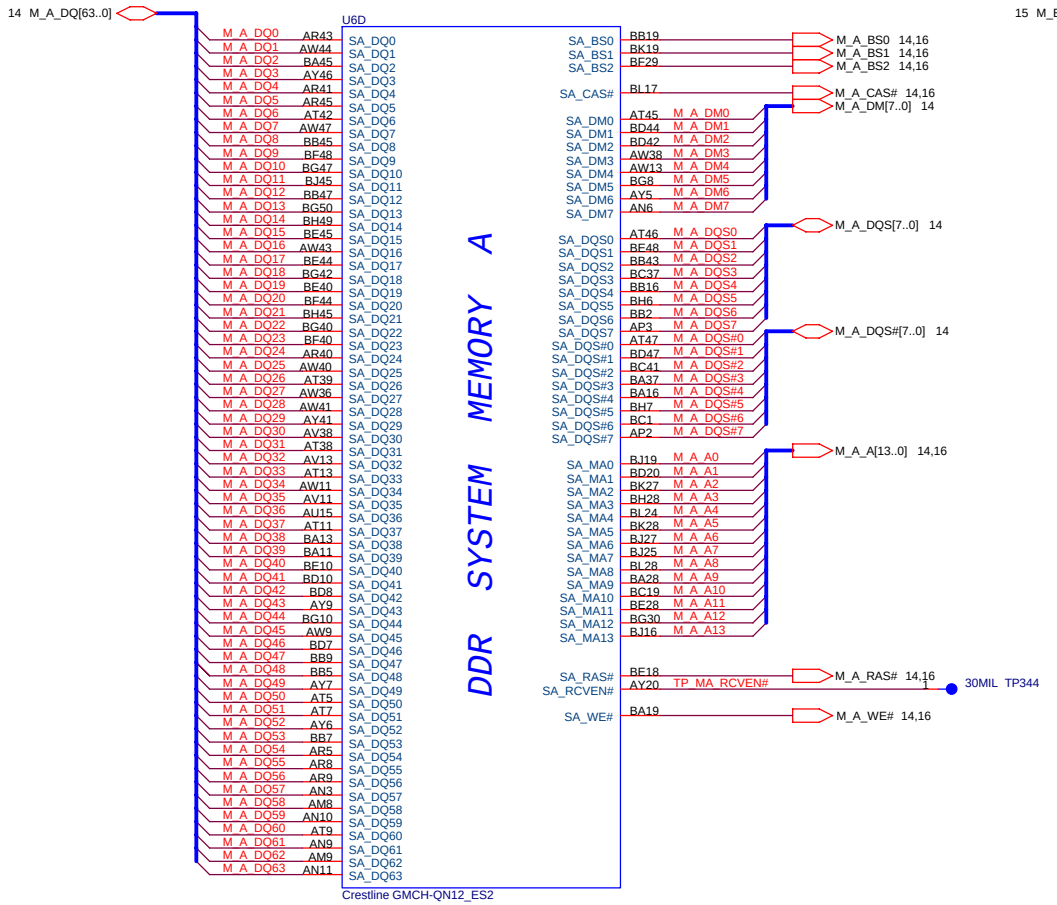

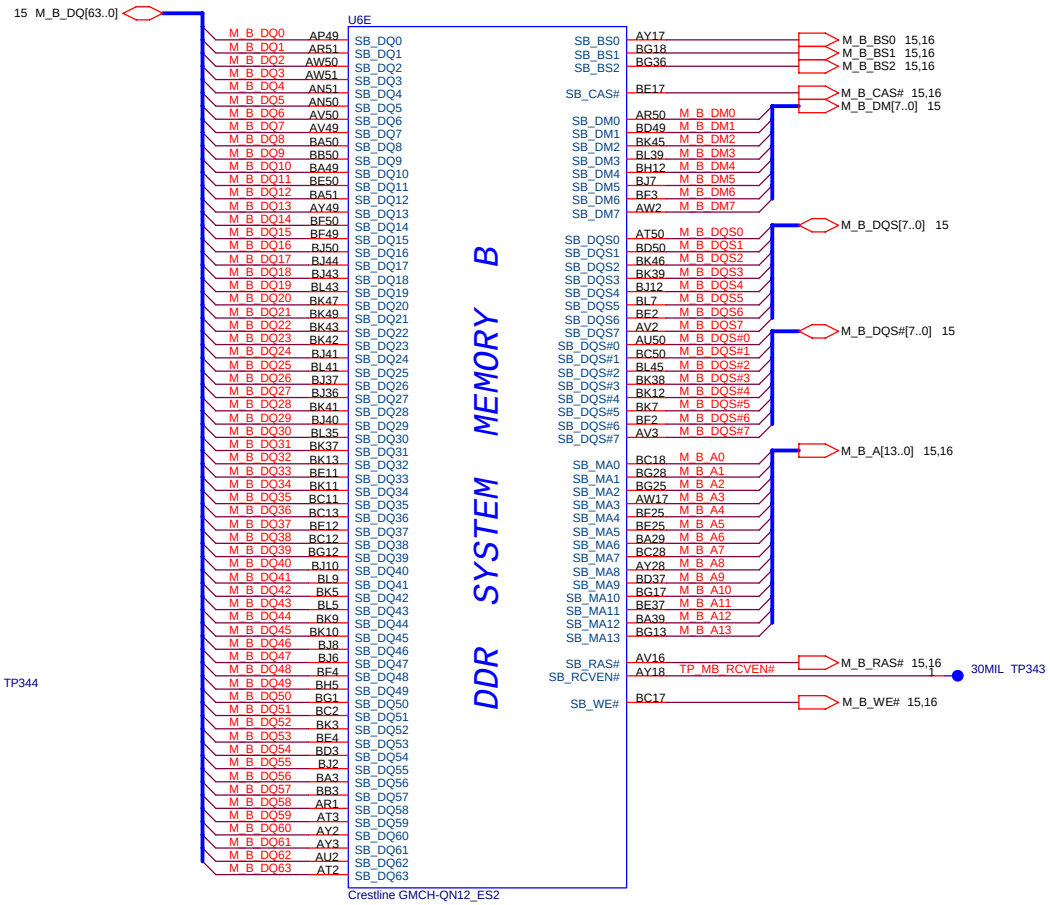

FOXCONN	HON HAI PRECISION IND. CO., LTD. CPBG - R&D Division	
Title	**Crestline (DDRII) 4 of 7**	
Size A3	Document Number **M620-L**	Rev 1.0
Date: Friday, June 08, 2007	Sheet 10 of 52	

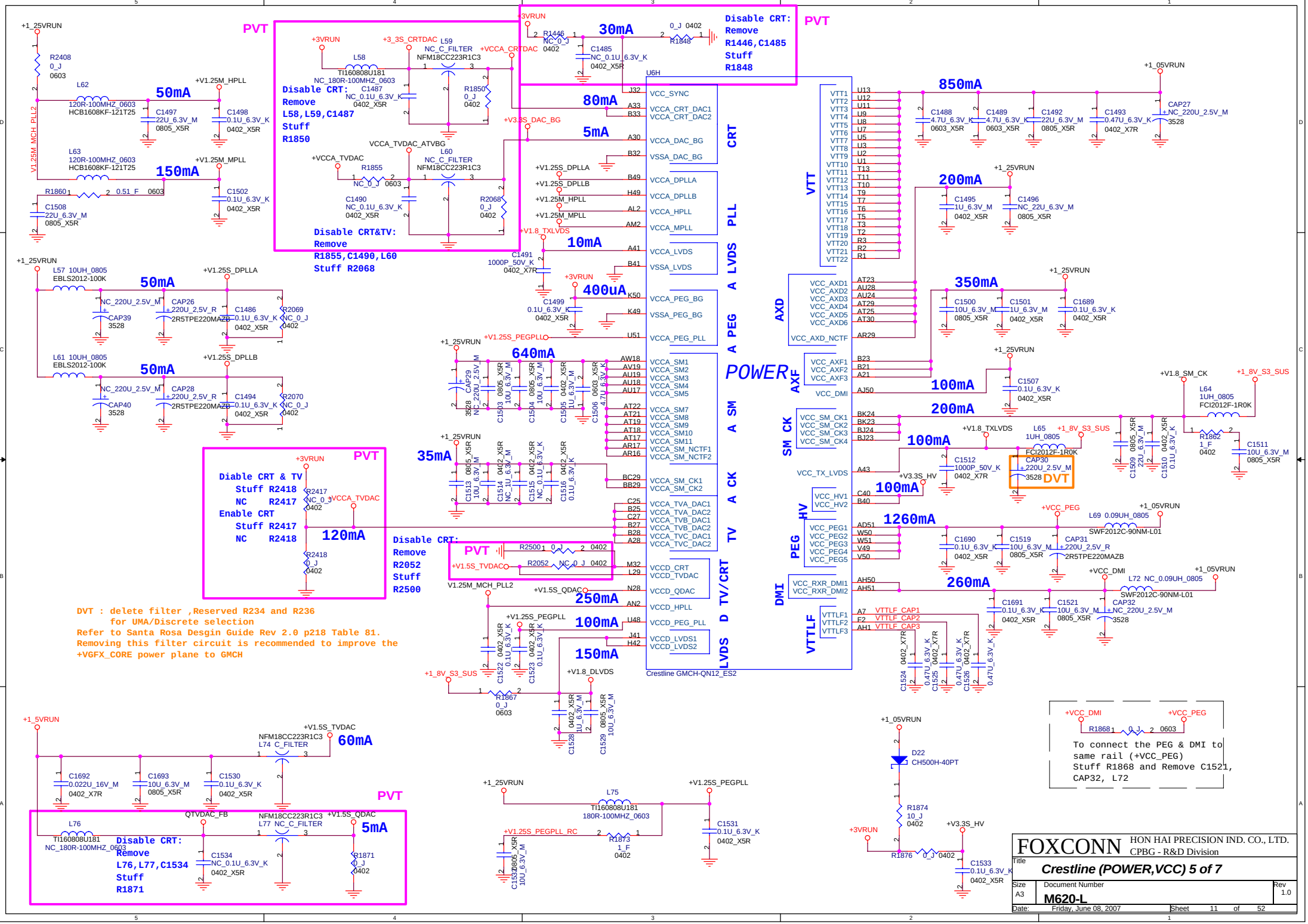
PVT
Disable CRT:
Remove
R1446,C1485
Stuff
R1848
Disable CRT:
Remove
L58,L59,C1487
Stuff
R1850
Disable CRT&TV:
Remove
R1855,C1490,L60
Stuff R2068
Diable CRT & TV
Stuff R2418
NC R2417
Enable CRT
Stuff R2417
NC R2418
Disable CRT:
Remove
R2052
Stuff
R2500
DVT : delete filter ,Reserved R234 and R236
for UMA/Discrete selection
Refer to Santa Rosa Desgin Guide Rev 2.0 p218 Table 81.
Removing this filter circuit is recommended to improve the
+VGFX_CORE power plane to GMCH
Disable CRT:
Remove
L76,L77,C1534
Stuff
R1871
To connect the PEG & DMI to
same rail (+VCC_PEG)
Stuff R1868 and Remove C1521,
CAP32, L72
POWER
Crestline GMCH-QN12_ES2
FOXCONN
HON HAI PRECISION IND. CO., LTD.
CPBG - R&D Division
Crestline (POWER,VCC) 5 of 7
M620-L
Size A3
Rev 1.0
Date: Friday, June 08, 2007
Sheet 11 of 52

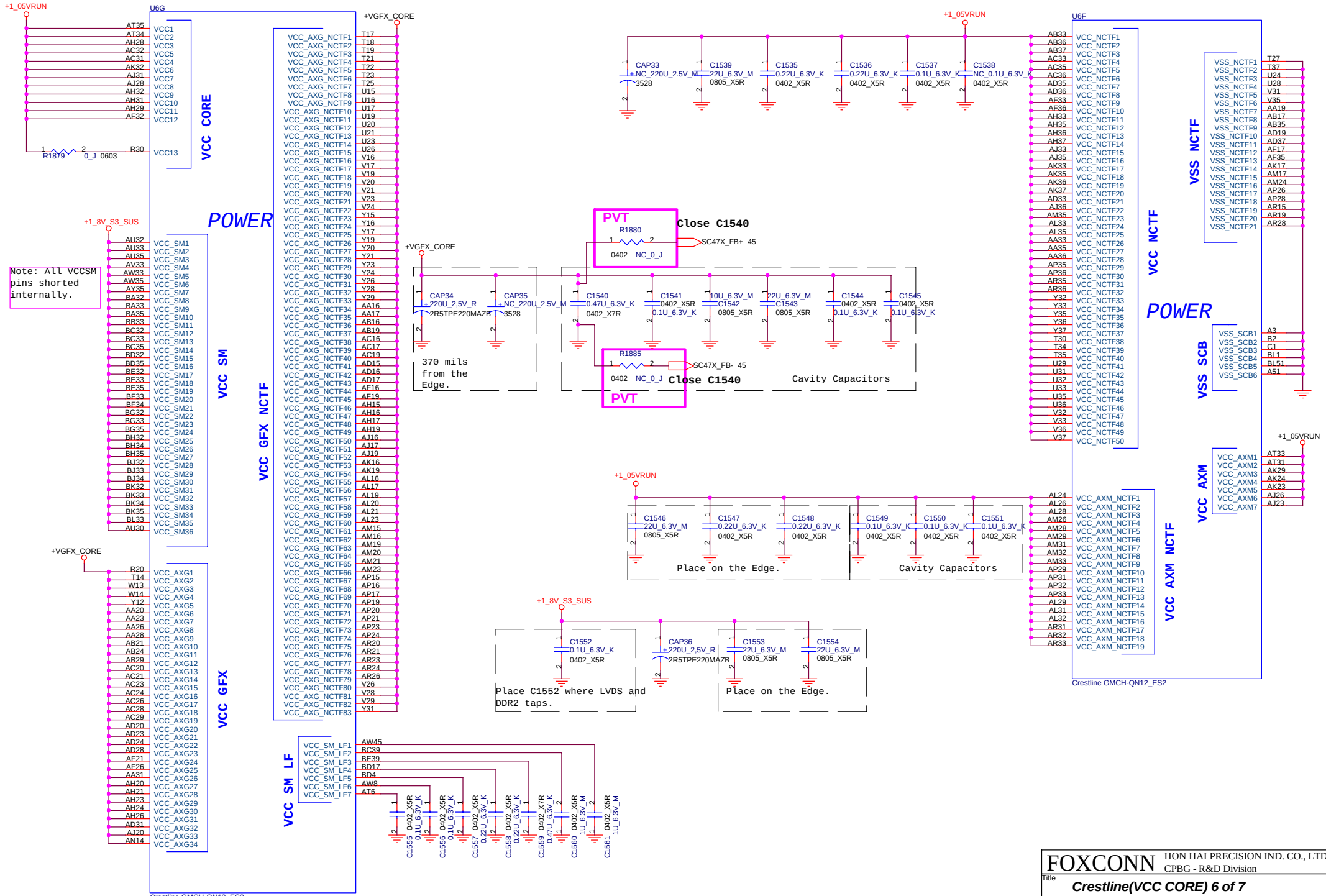

FOXCONN HON HAI PRECISION IND. CO., LTD.
CPBG - R&D Division

Title: **Crestline(VCC CORE) 6 of 7**

Size: A3 | Document Number: **M620-L** | Rev: 1.0

Date: Friday, June 08, 2007 | Sheet 12 of 52

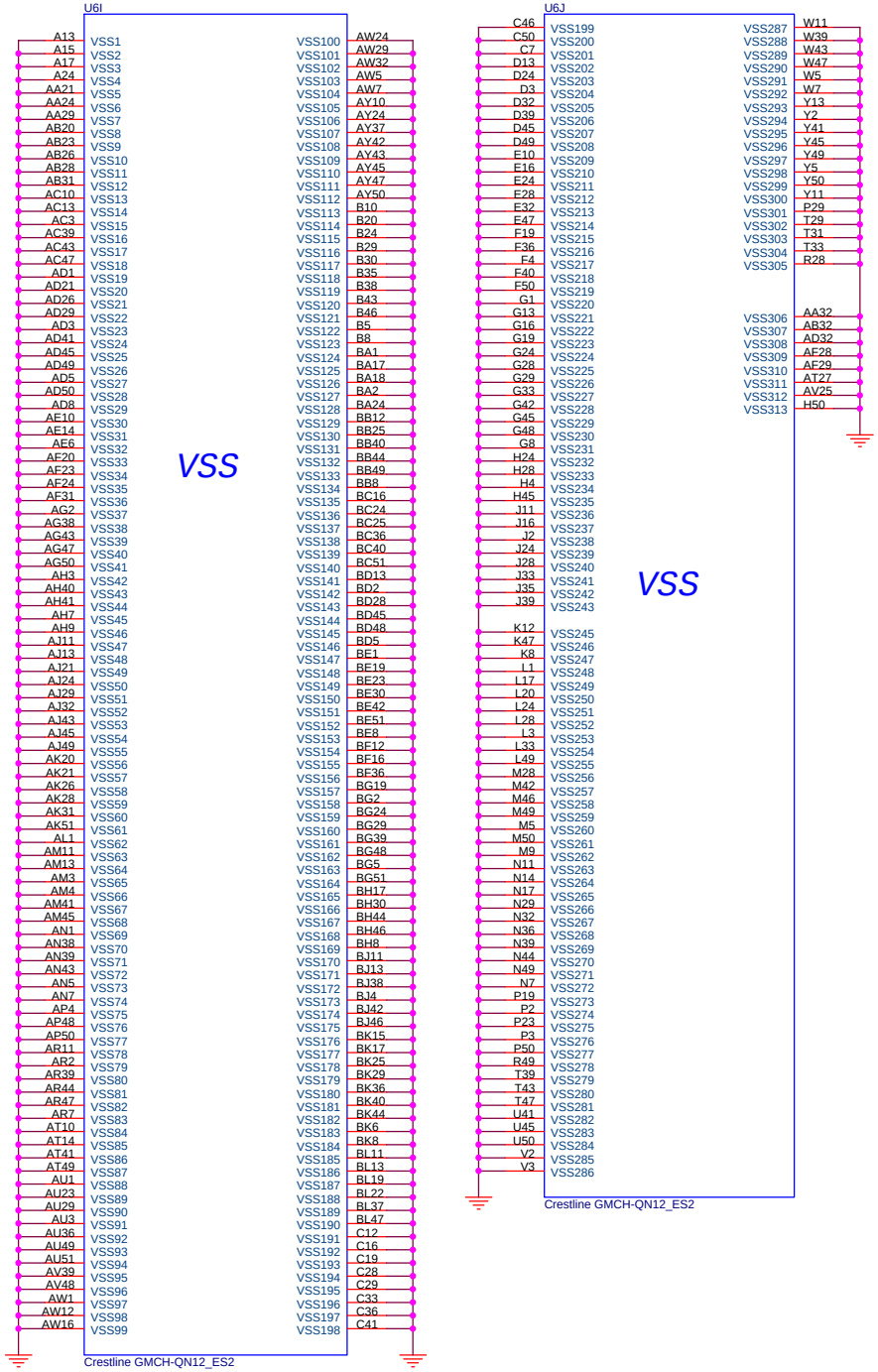

FOXCONN	HON HAI PRECISION IND. CO., LTD. CPBG - R&D Division		
Title	***Crestline (VSS) 7 of 7***		
Size A3	Document Number **M620-L**		Rev 1.0
Date: Friday, June 08, 2007		Sheet 13 of 52	

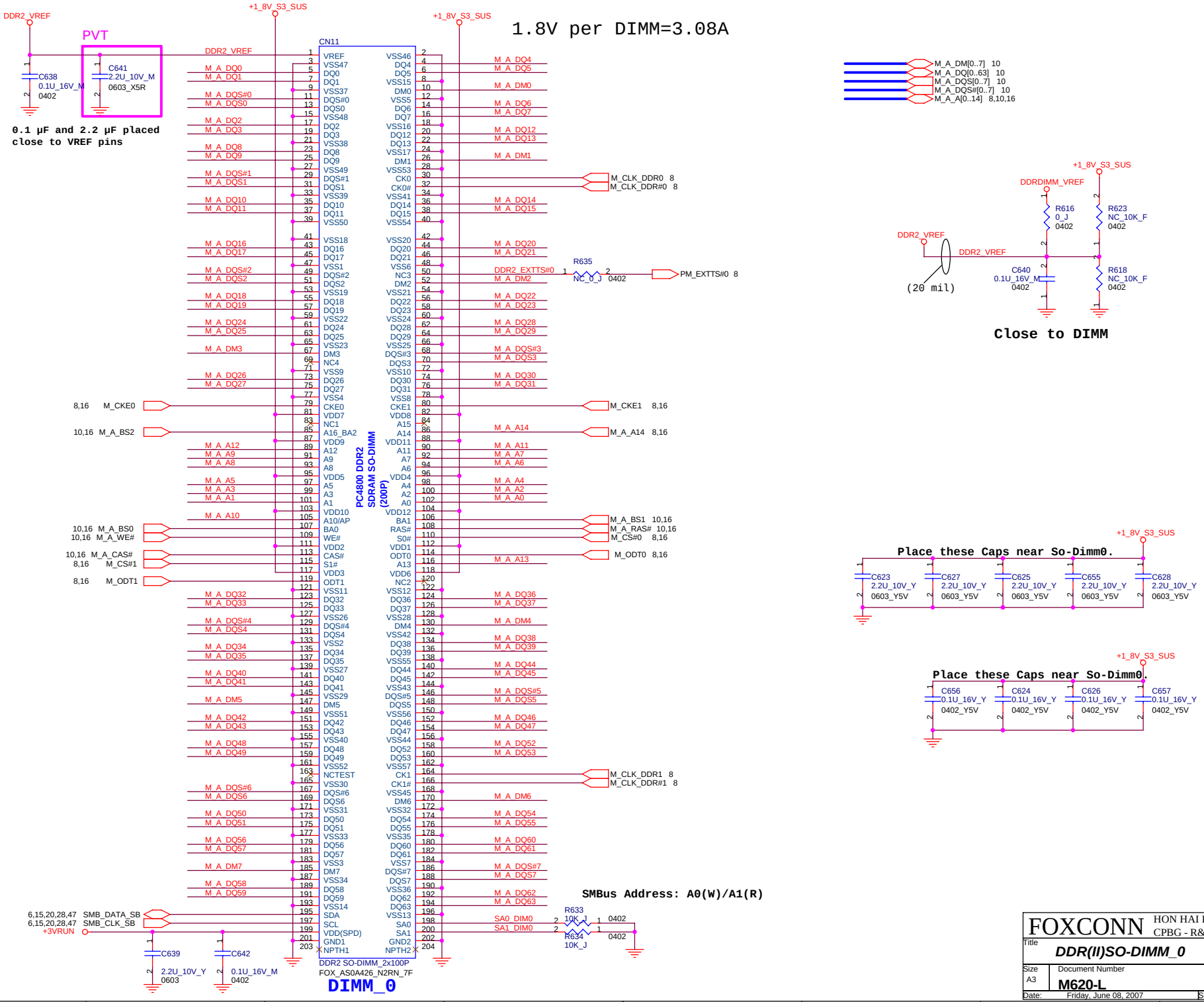
1.8V per DIMM=3.08A
DDR2_VREF
PVT
C638
0.1U_16V_M
0402
C641
2.2U_10V_M
0603_X5R
0.1 µF and 2.2 µF placed close to VREF pins
+1_8V_S3_SUS
CN11
PC4800 DDR2 SDRAM SO-DIMM (200P)
DDR2 SO-DIMM_2x100P
FOX_AS0A426_N2RN_7F
DIMM_0
M_A_DM[0..7] 10
M_A_DQ[0..63] 10
M_A_DQS[0..7] 10
M_A_DQS#[0..7] 10
M_A_A[0..14] 8,10,16
M_CLK_DDR0 8
M_CLK_DDR#0 8
M_CLK_DDR1 8
M_CLK_DDR#1 8
R635
NC_0_J
0402
DDR2_EXTTS#0
PM_EXTTS#0 8
M_CKE0 8,16
M_CKE1 8,16
M_A_BS2 10,16
M_A_A14 8,16
M_A_BS0 10,16
M_A_WE# 10,16
M_A_CAS# 10,16
M_CS#1 8,16
M_ODT1 8,16
M_A_BS1 10,16
M_A_RAS# 10,16
M_CS#0 8,16
M_ODT0 8,16
SMB_DATA_SB 6,15,20,28,47
SMB_CLK_SB 6,15,20,28,47
+3VRUN
C639
2.2U_10V_Y
0603
C642
0.1U_16V_M
0402
SMBus Address: A0(W)/A1(R)
R633
10K_J
0402
R634
10K_J
0402
SA0_DIM0
SA1_DIM0
+1_8V_S3_SUS
DDRDIMM_VREF
R616
0_J
0402
R623
NC_10K_F
0402
DDR2_VREF
(20 mil)
C640
0.1U_16V_M
0402
R618
NC_10K_F
0402
Close to DIMM
Place these Caps near So-Dimm0.
C623
2.2U_10V_Y
0603_Y5V
C627
2.2U_10V_Y
0603_Y5V
C625
2.2U_10V_Y
0603_Y5V
C655
2.2U_10V_Y
0603_Y5V
C628
2.2U_10V_Y
0603_Y5V
Place these Caps near So-Dimm0.
C656
0.1U_16V_Y
0402_Y5V
C624
0.1U_16V_Y
0402_Y5V
C626
0.1U_16V_Y
0402_Y5V
C657
0.1U_16V_Y
0402_Y5V
FOXCONN
HON HAI PRECISION IND. CO., LTD.
CPBG - R&D Division
Title
DDR(II)SO-DIMM_0
Size
A3
Document Number
M620-L
Rev
1.0
Date: Friday, June 08, 2007
Sheet 14 of 52

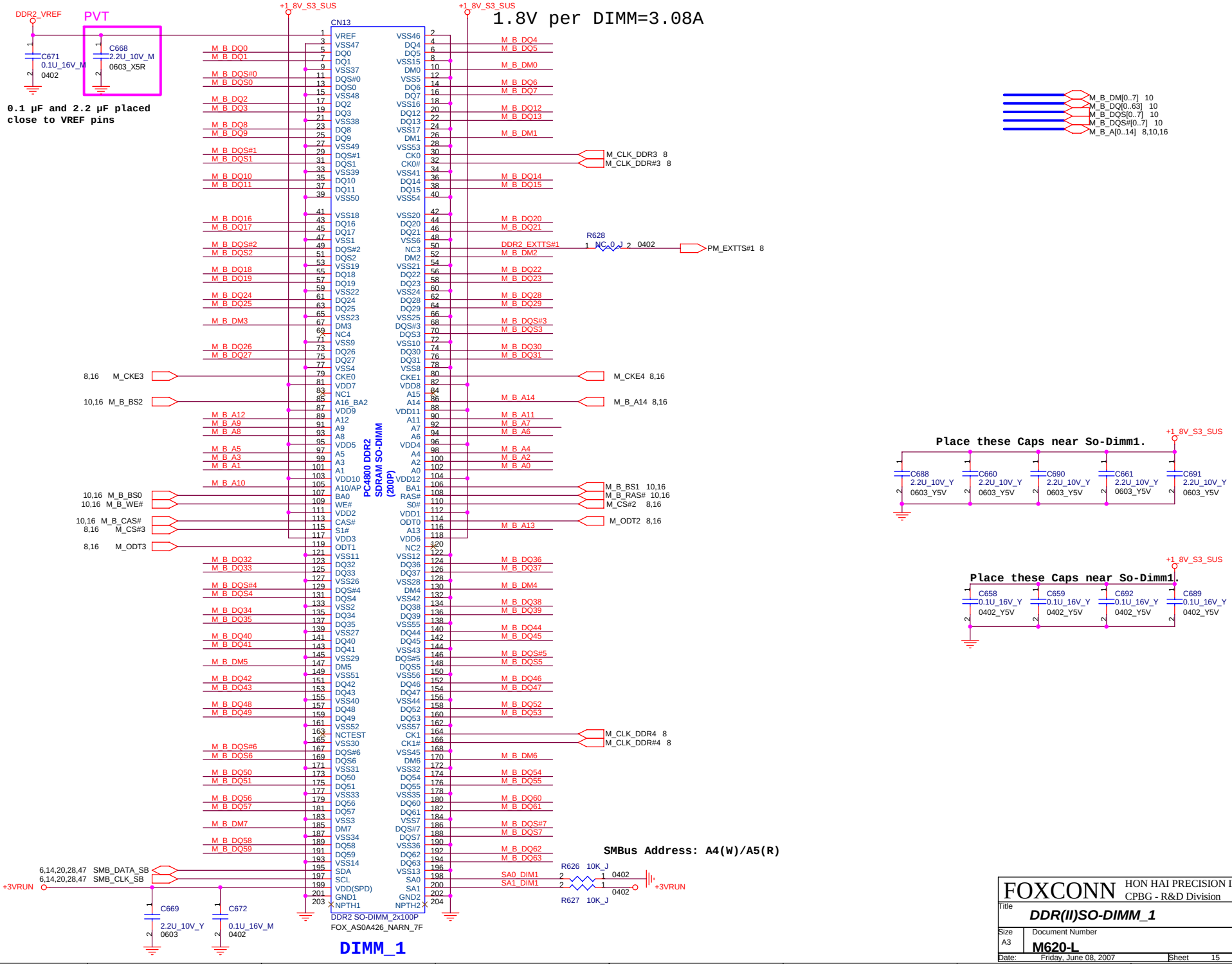

FOXCONN HON HAI PRECISION IND. CO., LTD.
CPBG - R&D Division

Title: DDR(II)SO-DIMM_1

Size: A3 | Document Number: M620-L | Rev: 1.0

Date: Friday, June 08, 2007 | Sheet 15 of 52

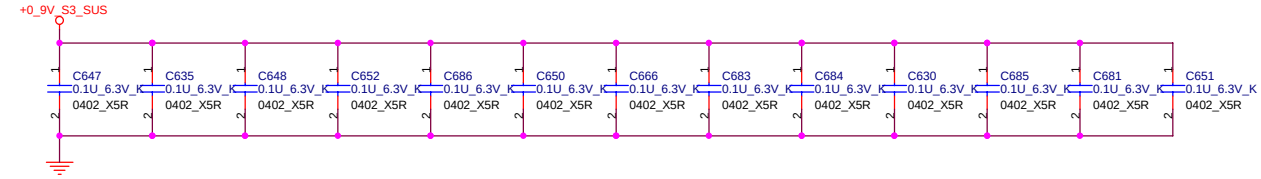

Layout note: Place 1 cap close to every 1 R-pack terminated to +0_9V_S3_SUS

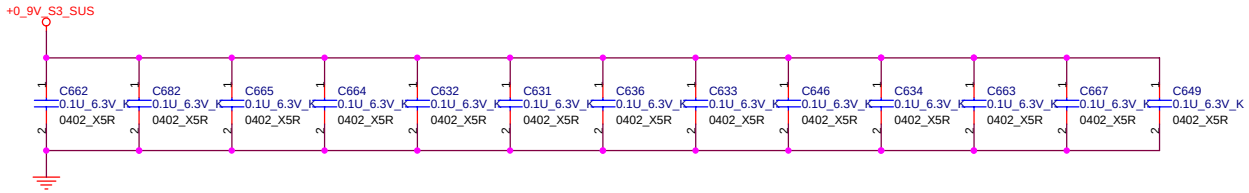

Layout note: Place 1 cap close to every 1 R-pack terminated to +0_9V_S3_SUS

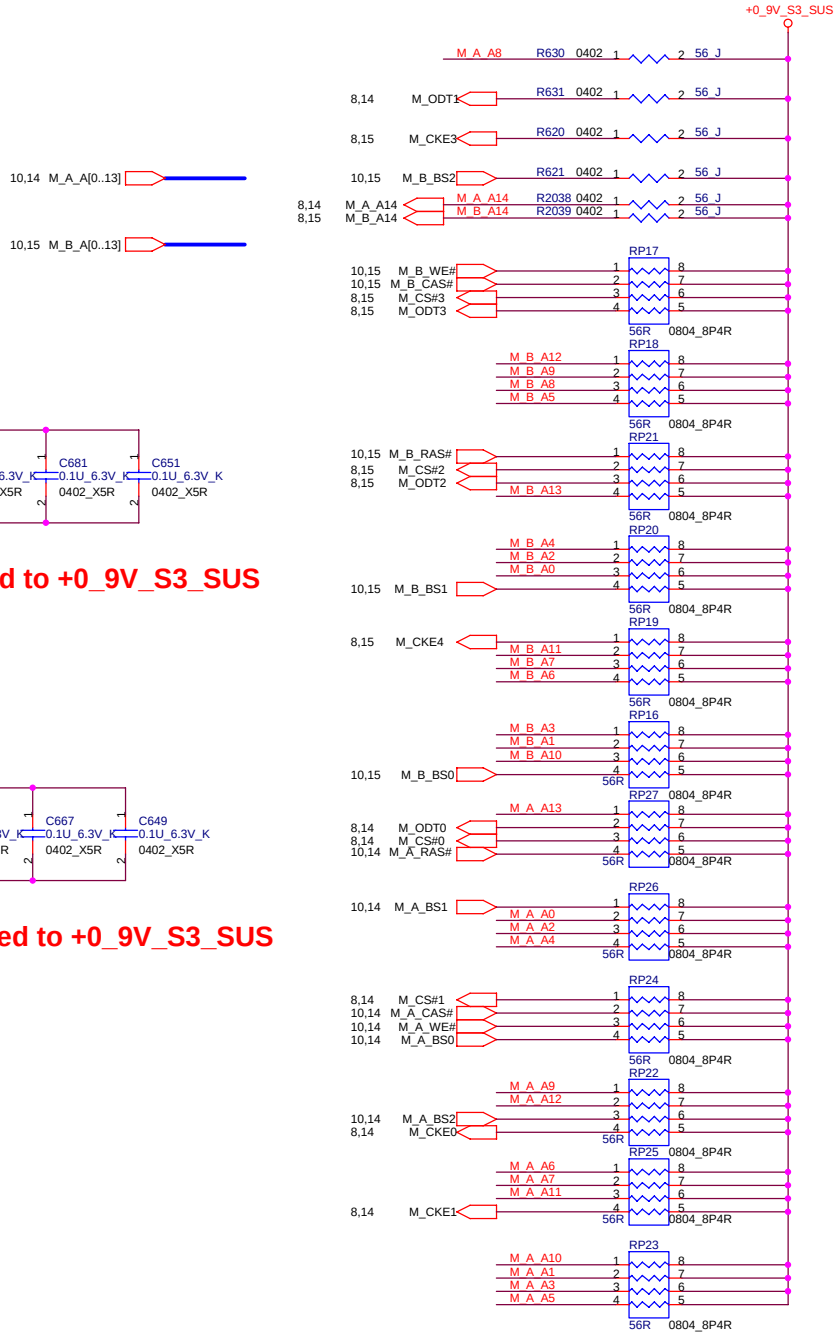

FOXCONN	HON HAI PRECISION IND. CO., LTD. CPBG - R&D Division	
Title	***DDR(II)Termination***	
Size A3	Document Number **M620-L**	Rev 1.0
Date: Friday, June 08, 2007	Sheet 16 of 52	

LVDS CONNECTOR

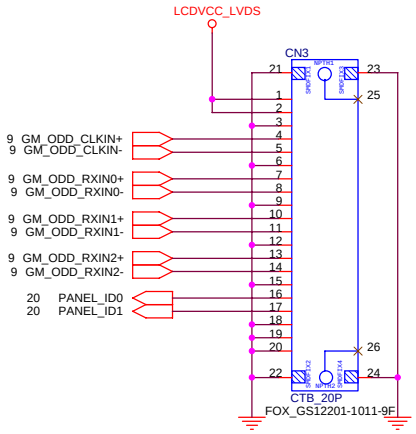

For EMI

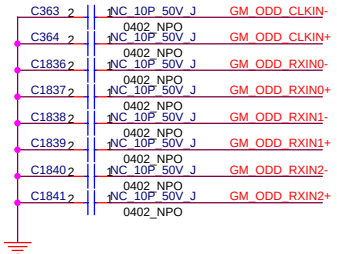

Place C363,364,1836~1841 close to CN3

Cable ID(1:0)	0 0	0 1	1 0	1 1
Vendor	CPT			
Type				
Model Name	CLAA154WA05AN			
Size	15.4"	15.4"	15.4"	15.4"

LCD POWER

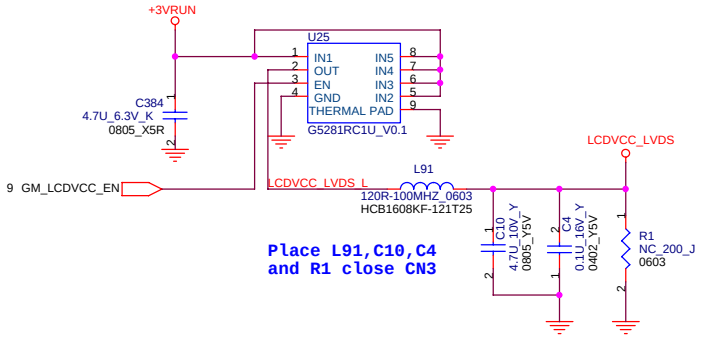

Place L91,C10,C4 and R1 close CN3

DISCHARGE

DISCHARGE

The R1 will consume about 0.054 Watt (3.3x3.3/200 = 0.054W). We changed resistor to 0603 size (1/8 Watt)

FOXCONN	HON HAI PRECISION IND. CO., LTD. CPBG - R&D Division	
Title	***LVDS***	
Size A3	Document Number **M620-L**	Rev 1.0
Date: Friday, June 08, 2007	Sheet 17 of 52	

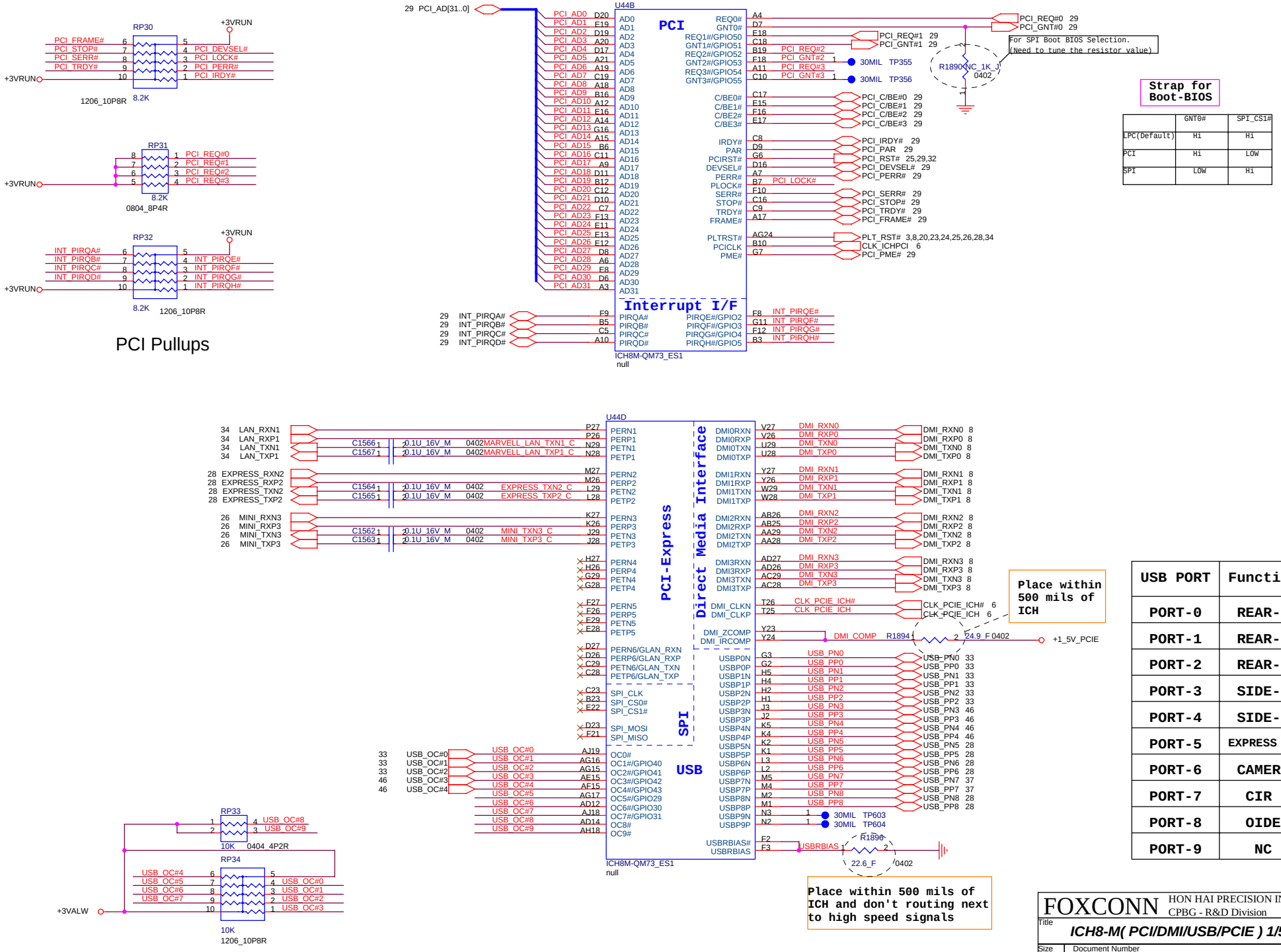

USB PORT	Function
PORT-0	REAR-1
PORT-1	REAR-2
PORT-2	REAR-3
PORT-3	SIDE-1
PORT-4	SIDE-2
PORT-5	EXPRESS CARD
PORT-6	CAMERA
PORT-7	CIR
PORT-8	OIDE
PORT-9	NC

FOXCONN HON HAI PRECISION IND. CO., LTD.
CPBG - R&D Division

Title: ICH8-M(PCI/DMI/USB/PCIE) 1/5

Size: A3 | Document Number: M620-L | Rev: 1.0

Date: Friday, June 08, 2007 | Sheet 18 of 52

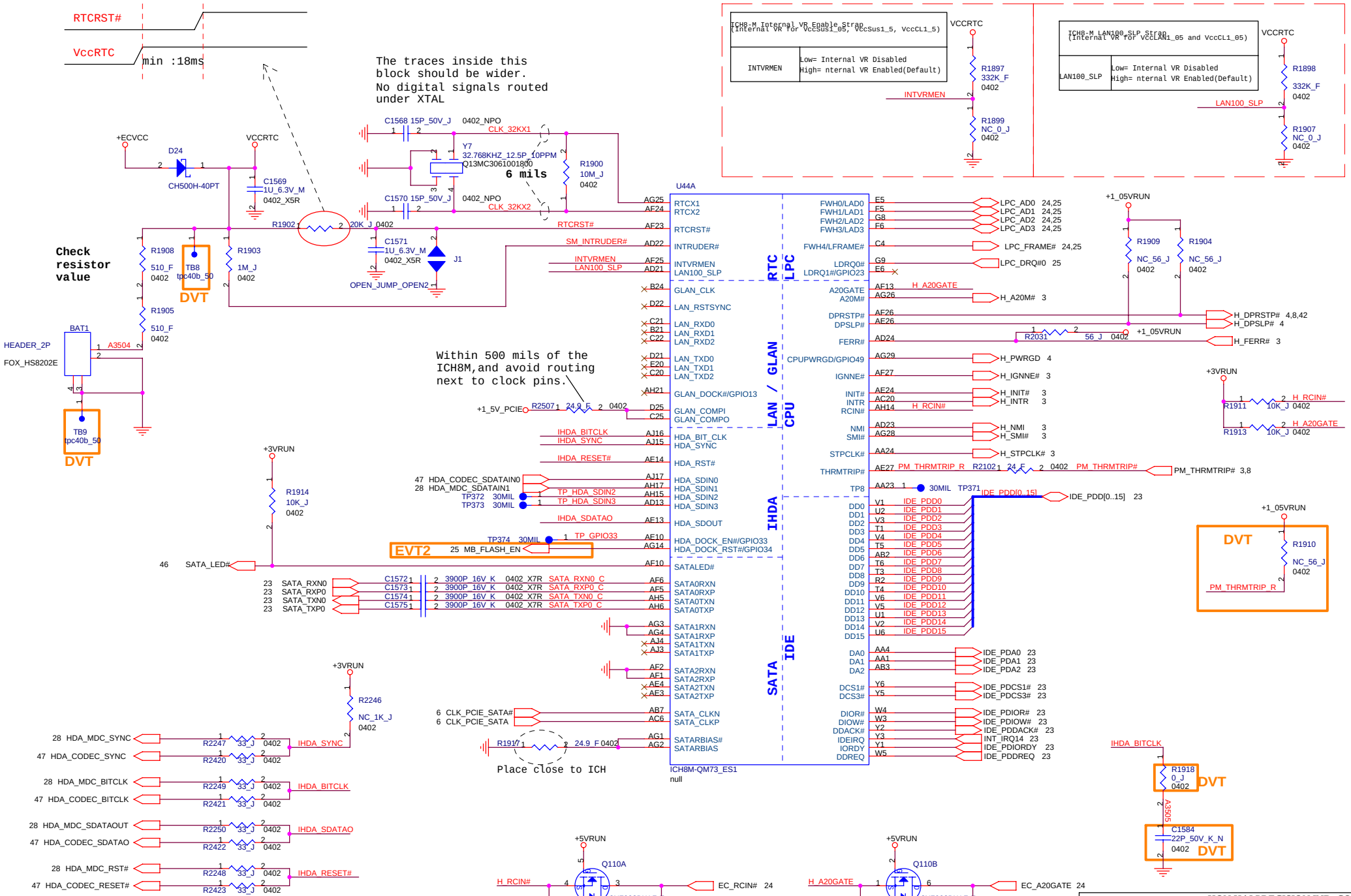

FOXCONN HON HAI PRECISION IND. CO., LTD.
CPBG - R&D Division

Title: ICH8-M(LPC,IDE,SATA) 2/5

Size: A3 | Document Number: M620-L | Rev: 1.0

Date: Friday, June 08, 2007 | Sheet 19 of 52

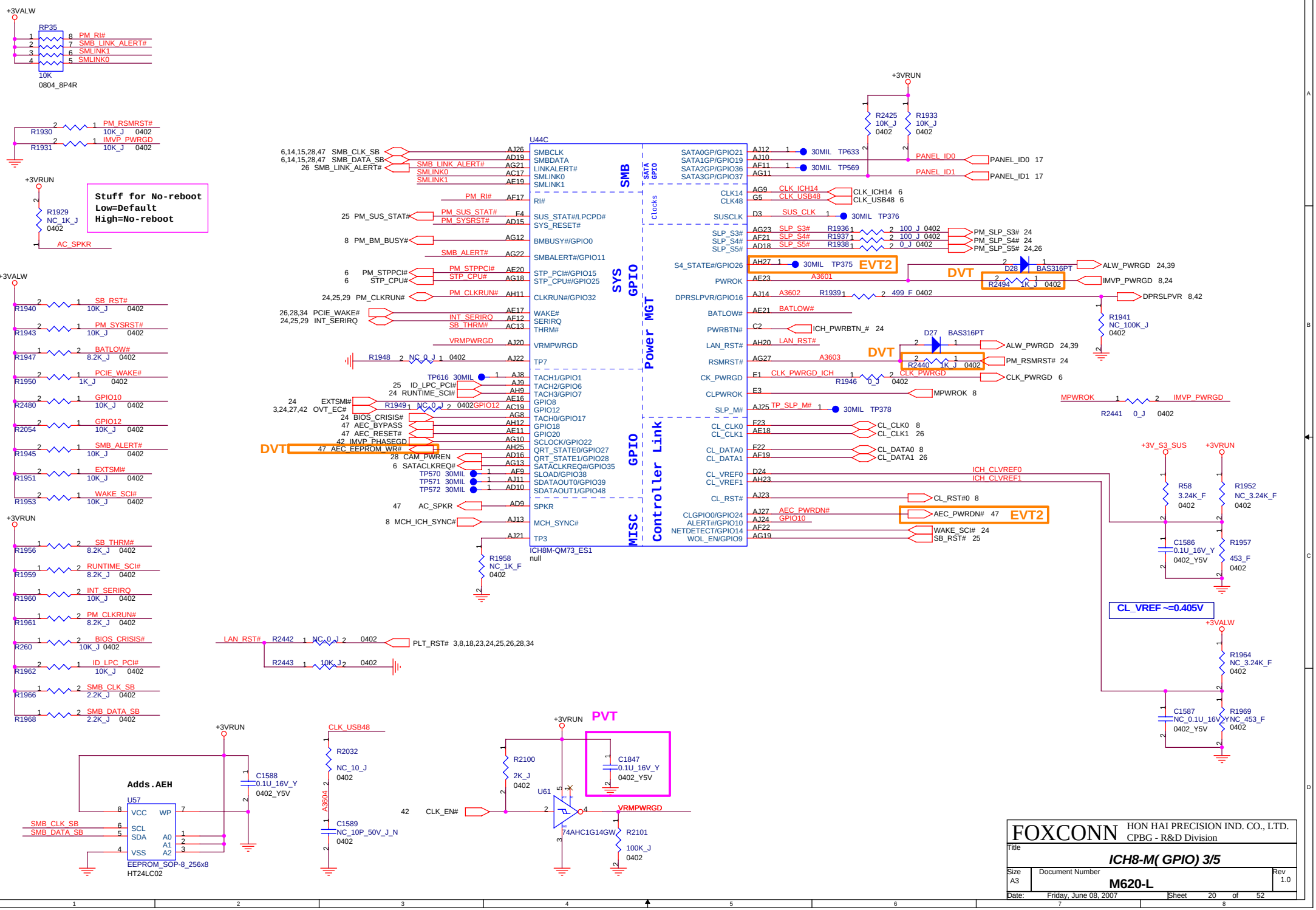
U44C
ICH8M-QM73_ES1
null
SMB
SYS GPIO
Power MGT
GPIO
Controller Link
MISC
Clocks
SATA GPIO
Stuff for No-reboot
Low=Default
High=No-reboot
EVT2
DVT
PVT
CL_VREF =0.405V
Adds.AEH
EEPROM_SOP-8_256x8
HT24LC02
74AHC1G14GW
FOXCONN
HON HAI PRECISION IND. CO., LTD.
CPBG - R&D Division
Title
ICH8-M(GPIO) 3/5
Size
A3
Document Number
M620-L
Rev
1.0
Date: Friday, June 08, 2007
Sheet 20 of 52

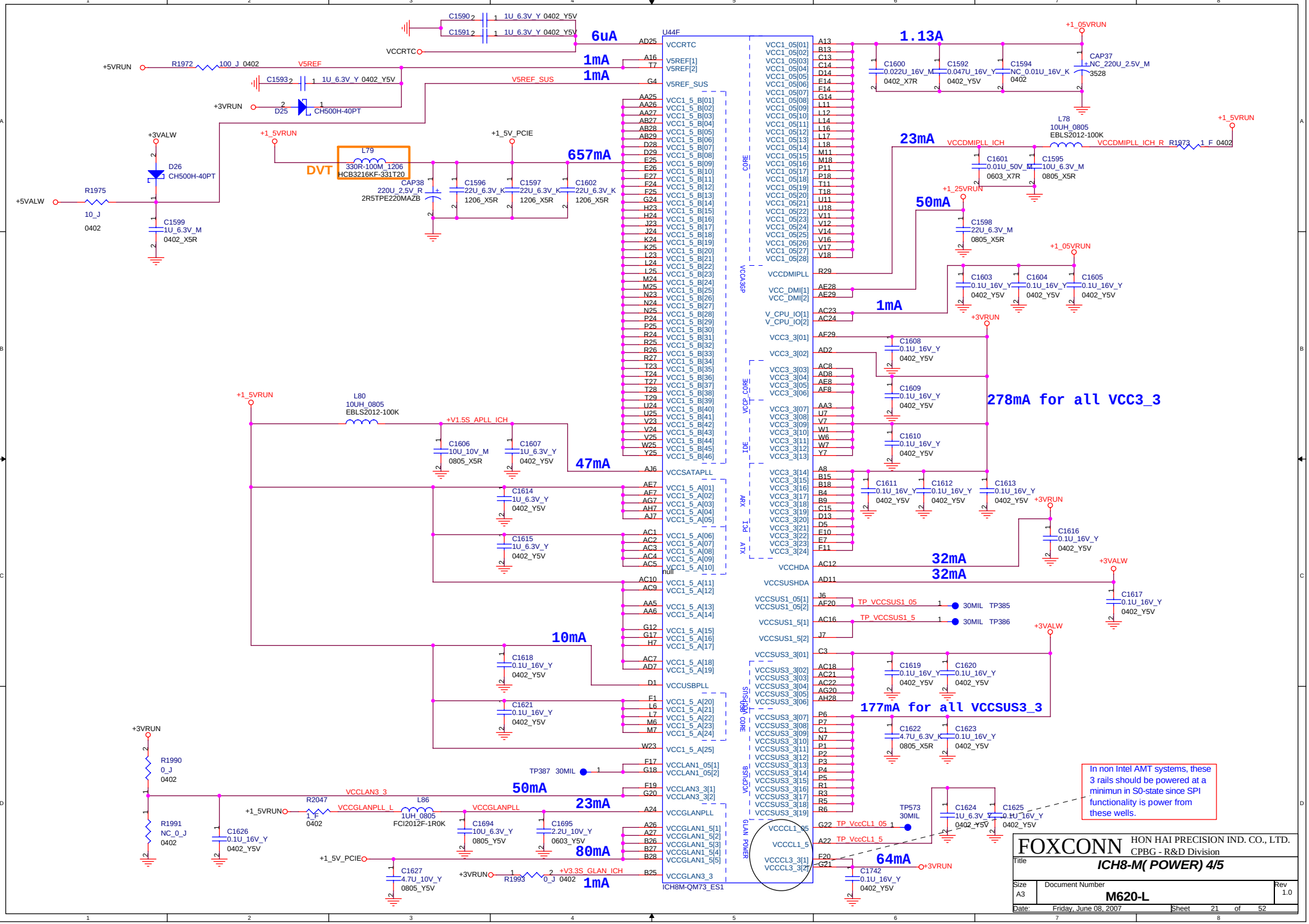
U44F
ICH8M-QM73_ES1
6uA
1mA
1mA
657mA
47mA
10mA
50mA
23mA
80mA
1mA
1.13A
23mA
50mA
1mA
278mA for all VCC3_3
32mA
32mA
177mA for all VCCSUS3_3
64mA
DVT
L79
330R-100M_1206
HCB3216KF-331T20
L80
10UH_0805
EBLS2012-100K
L78
10UH_0805
EBLS2012-100K
L86
1UH_0805
FCI2012F-1R0K
R1972
100_J_0402
R1975
10_J
0402
R1990
0_J
0402
R1991
NC_0_J
0402
R2047
1_F
0402
R1993
0_J_0402
R1973
1_F_0402
D25
CH500H-40PT
D26
CH500H-40PT
CAP38
220U_2.5V_R
2R5TPE220MAZB
CAP37
NC_220U_2.5V_M
3528
+5VRUN
+5VALW
+3VALW
+3VRUN
+1_5VRUN
+1_5V_PCIE
+1_05VRUN
+1_25VRUN
+V1.5S_APLL_ICH
+V3.3S_GLAN_ICH
VCCRTC
V5REF
V5REF_SUS
VCCDMIPLL_ICH
VCCDMIPLL_ICH_R
TP_VCCSUS1_05
TP_VCCSUS1_5
TP_VccCL1_05
TP_VccCL1_5
TP385
TP386
TP387
TP573
30MIL
In non Intel AMT systems, these 3 rails should be powered at a minimun in S0-state since SPI functionality is power from these wells.
FOXCONN
HON HAI PRECISION IND. CO., LTD.
CPBG - R&D Division
Title
ICH8-M(POWER) 4/5
Size
A3
Document Number
M620-L
Rev
1.0
Date: Friday, June 08, 2007
Sheet 21 of 52

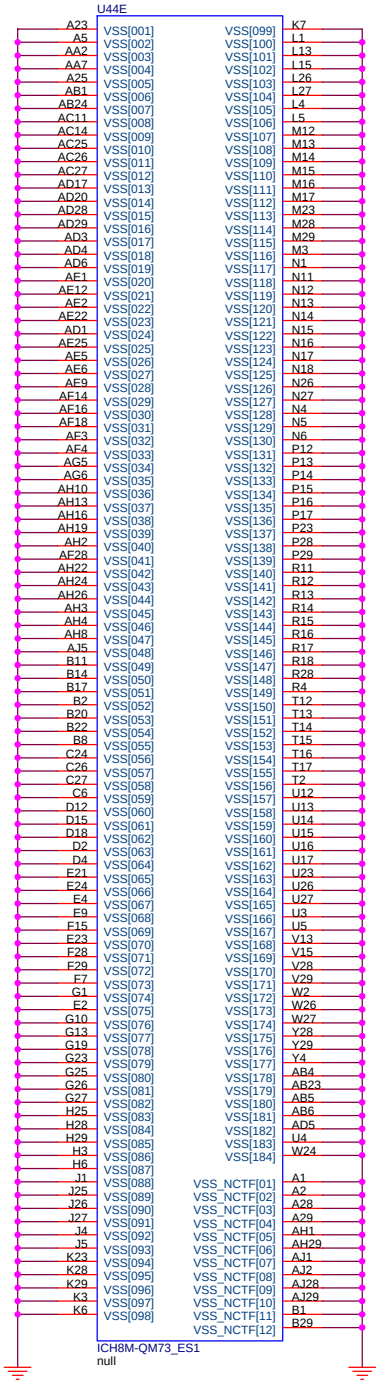

FOXCONN	HON HAI PRECISION IND. CO., LTD. CPBG - R&D Division	
Title	***ICH8-M(GND) 5/5***	
Size A3	Document Number **M620-L**	Rev 1.0
Date: Friday, June 08, 2007	Sheet 22 of 52	

SATA HDD CONN

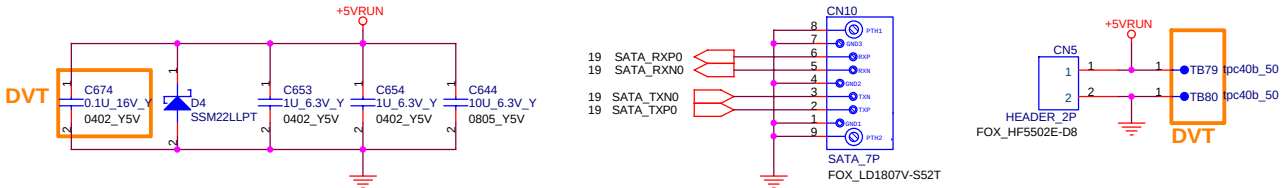

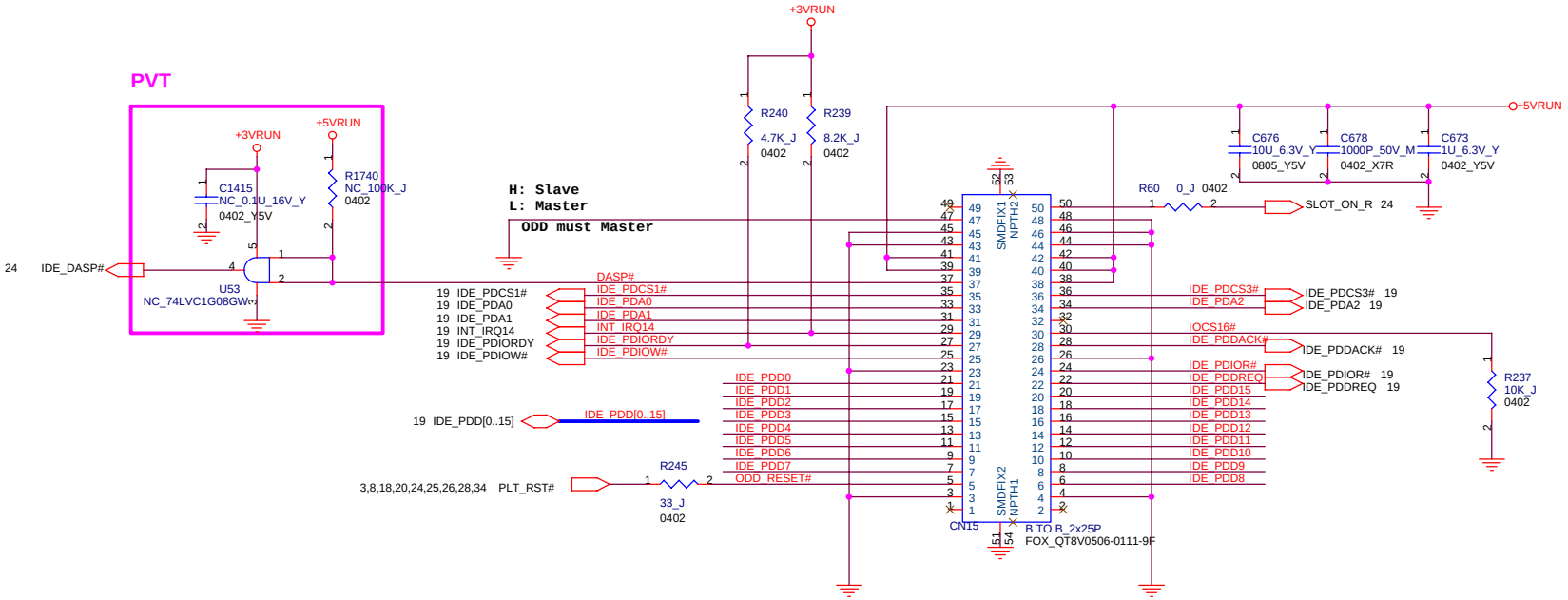

CD-ROM CONN

FOXCONN	HON HAI PRECISION IND. CO., LTD. CPBG - R&D Division	
Title	***SATA HDD/CD-ROM***	
Size A3	Document Number **M620-L**	Rev 1.0
Date: Friday, June 08, 2007	Sheet 23 of 52	

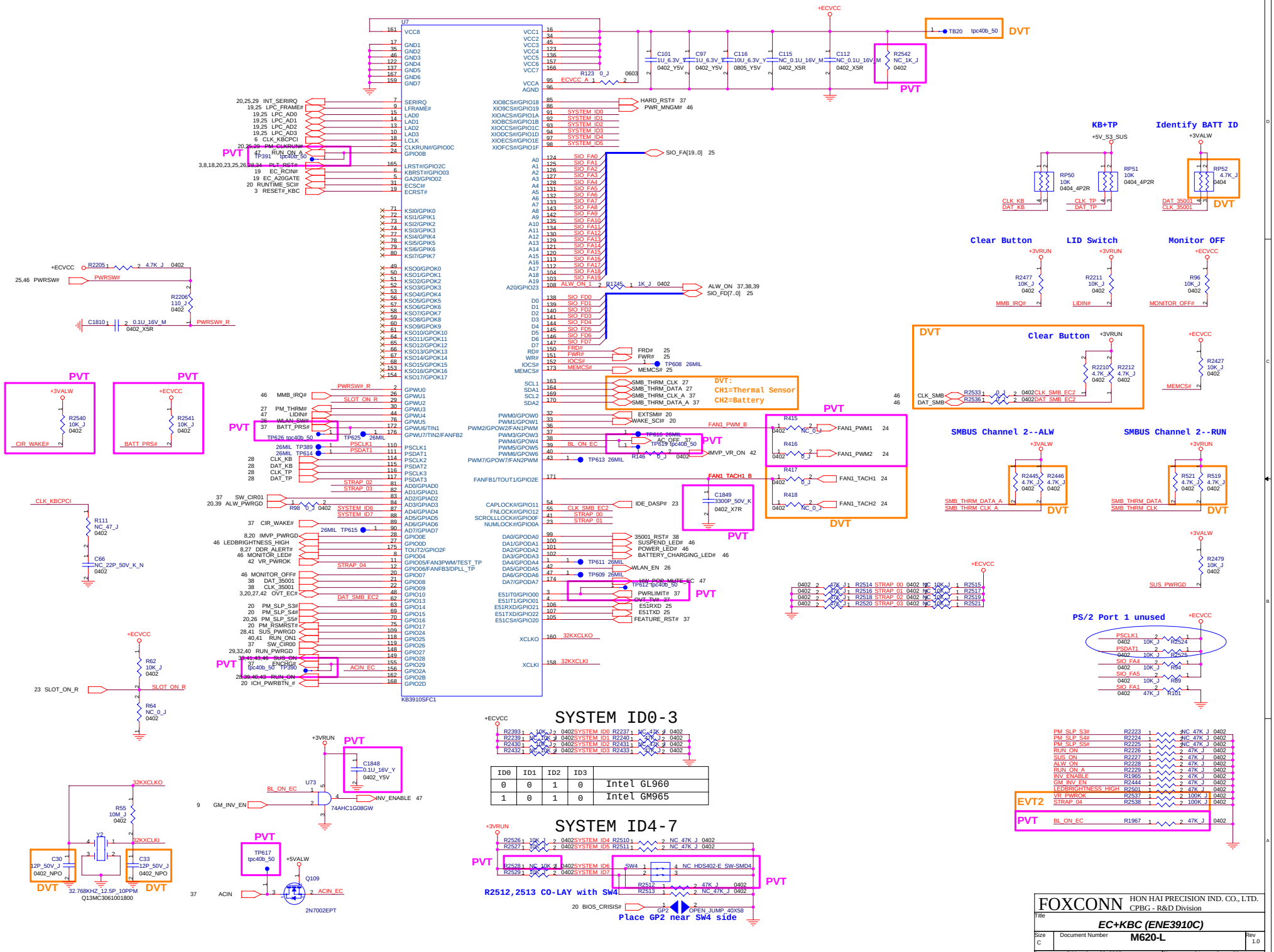

ID0	ID1	ID2	ID3	
0	0	1	0	Intel GL960
1	0	1	0	Intel GM965

FOXCONN HON HAI PRECISION IND. CO., LTD.
CPBG - R&D Division

Title: EC+KBC (ENE3910C)

Size C | Document Number M620-L | Rev 1.0

Date: Friday, June 08, 2007 | Sheet 24 of 52

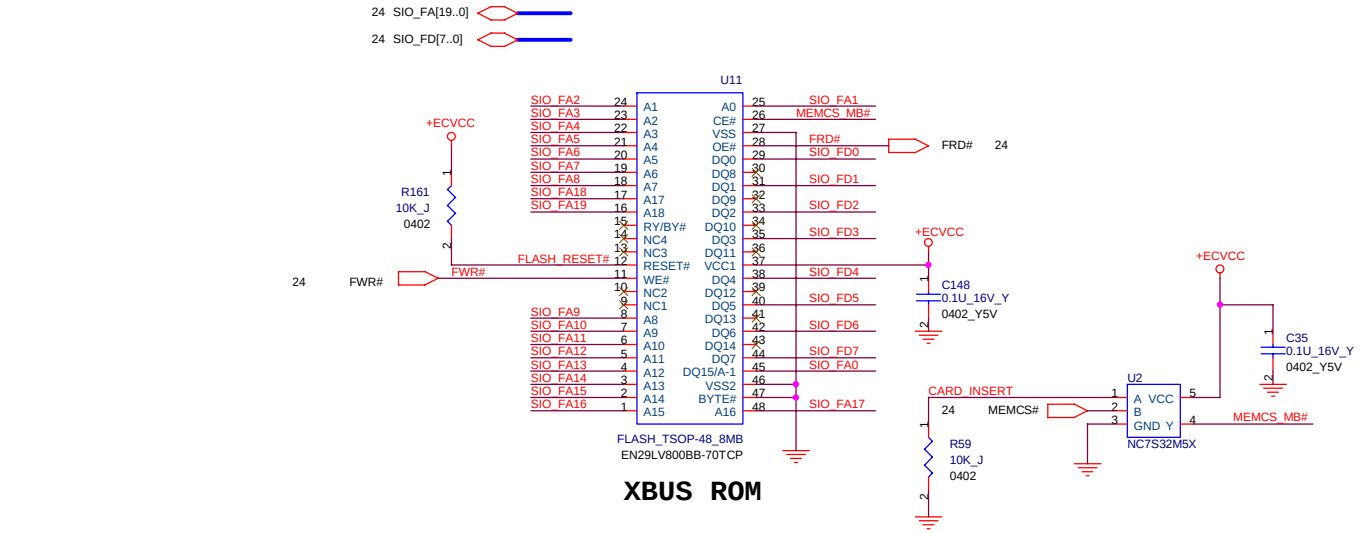

XBUS ROM

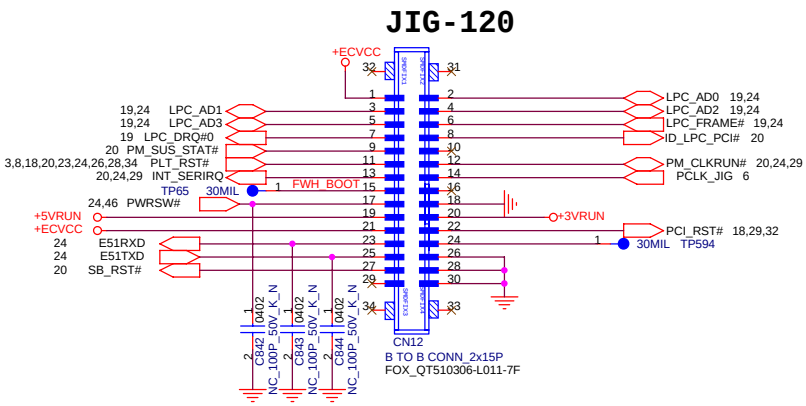

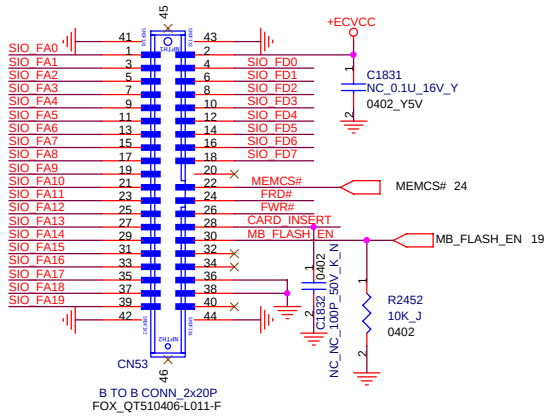

EXTERNAL XBUS ROM INTERFACE

FOXCONN	HON HAI PRECISION IND. CO., LTD. CPBG - R&D Division	
Title	***Flash ROM/X-Bus CONN***	
Size A3	Document Number **M620-L**	Rev 1.0
Date: Friday, June 08, 2007	Sheet 25 of 52	

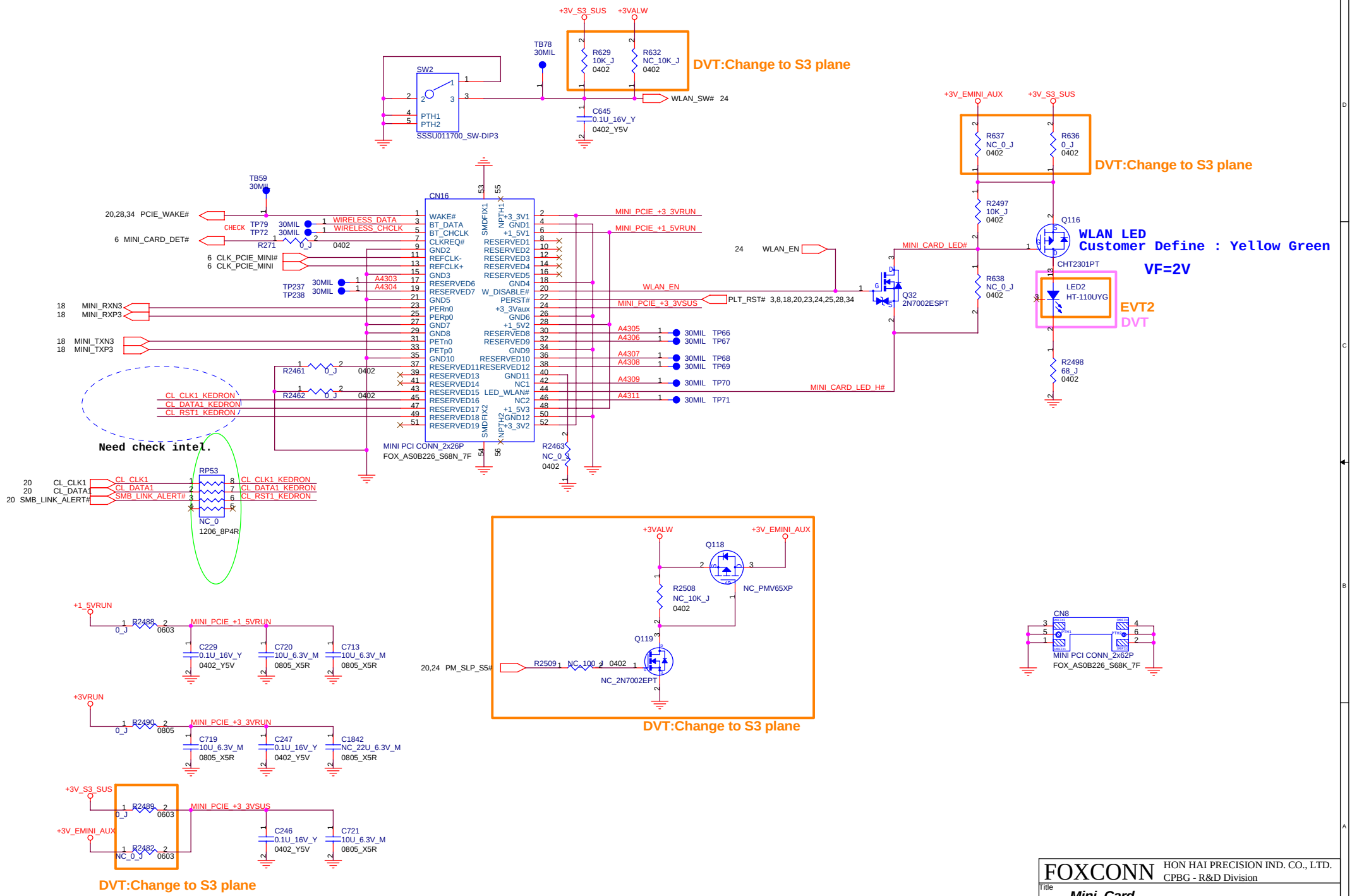

FOXCONN	HON HAI PRECISION IND. CO., LTD. CPBG - R&D Division	
Title	***Mini_Card***	
Size A3	Document Number **M620-L**	Rev 1.0
Date: Friday, June 08, 2007	Sheet 26 of 52	

FAN

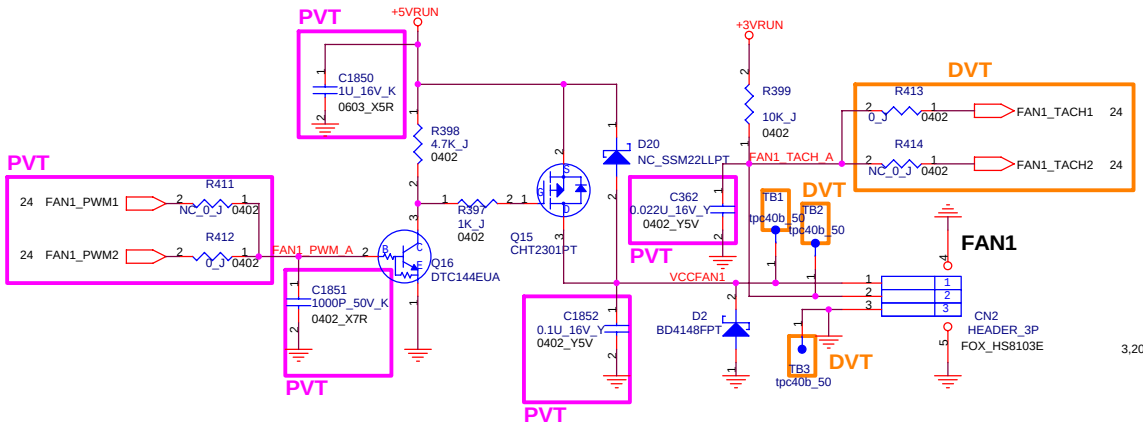

CPU/AUDIO SENSOR G781-1

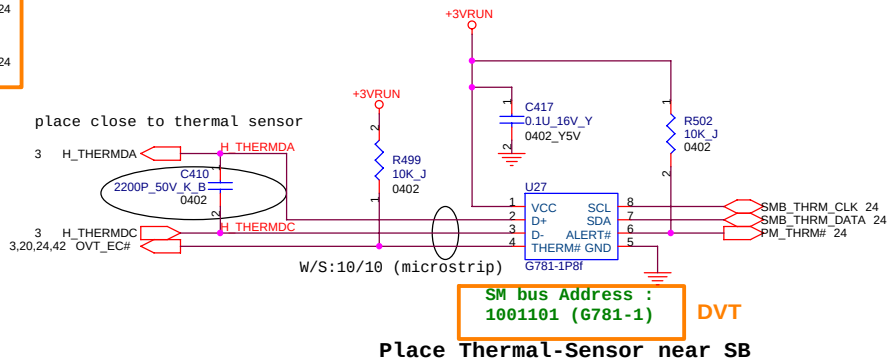

Place Thermal-Sensor near SB

HW THERMAL PROTECTION

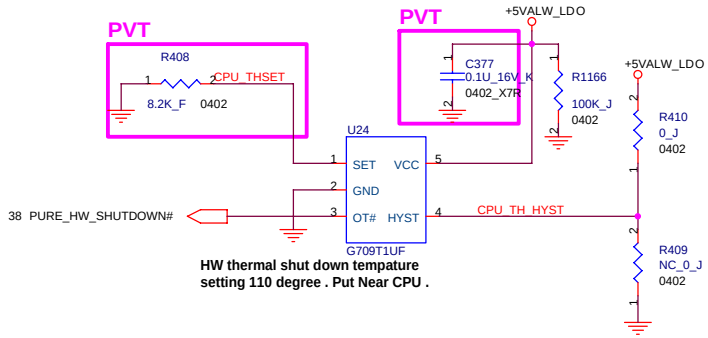

HW thermal shut down tempature
setting 110 degree . Put Near CPU .

GMCH/DDR/TV SENSOR G781

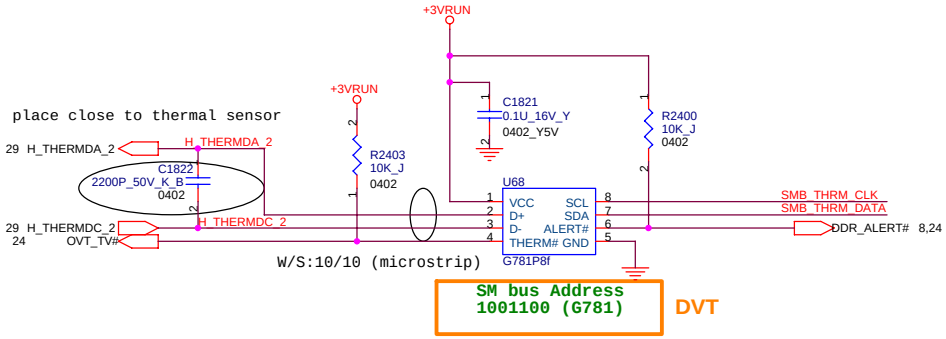

Place Thermal-Sensor near between NB & DDR

FOXCONN	HON HAI PRECISION IND. CO., LTD. CPBG - R&D Division	
Title	FAN/HW THERMAL PROTECT	
Size A3	Document Number M620-L	Rev 1.0
Date: Friday, June 08, 2007	Sheet 27 of 52	

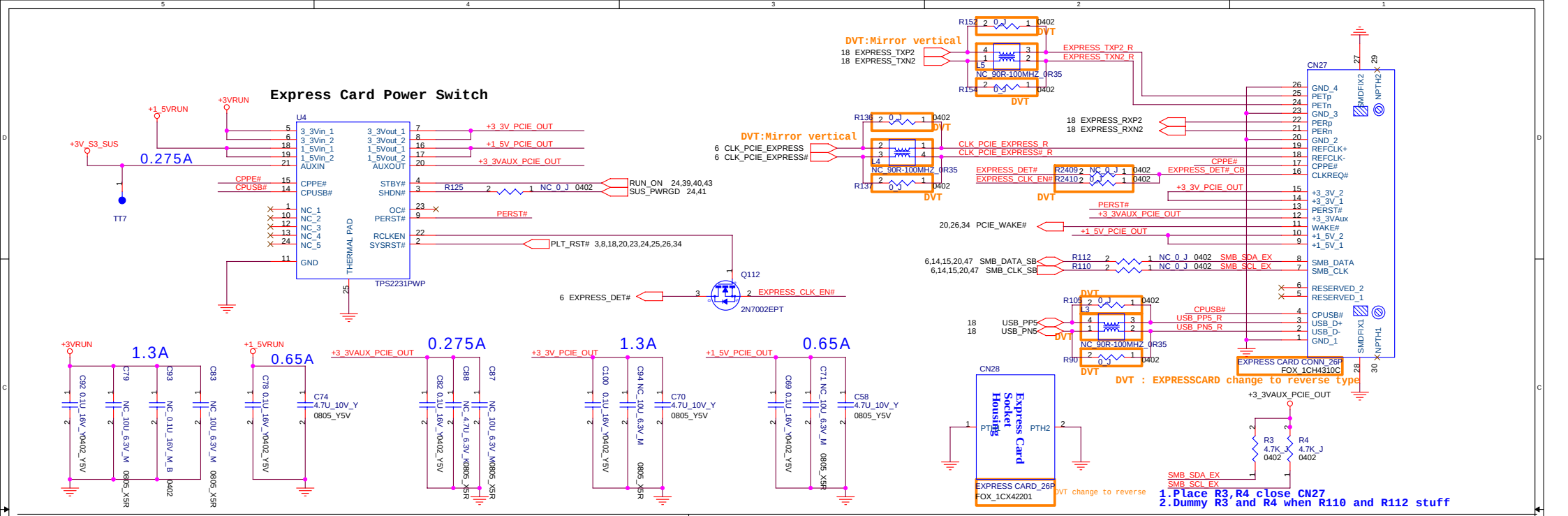

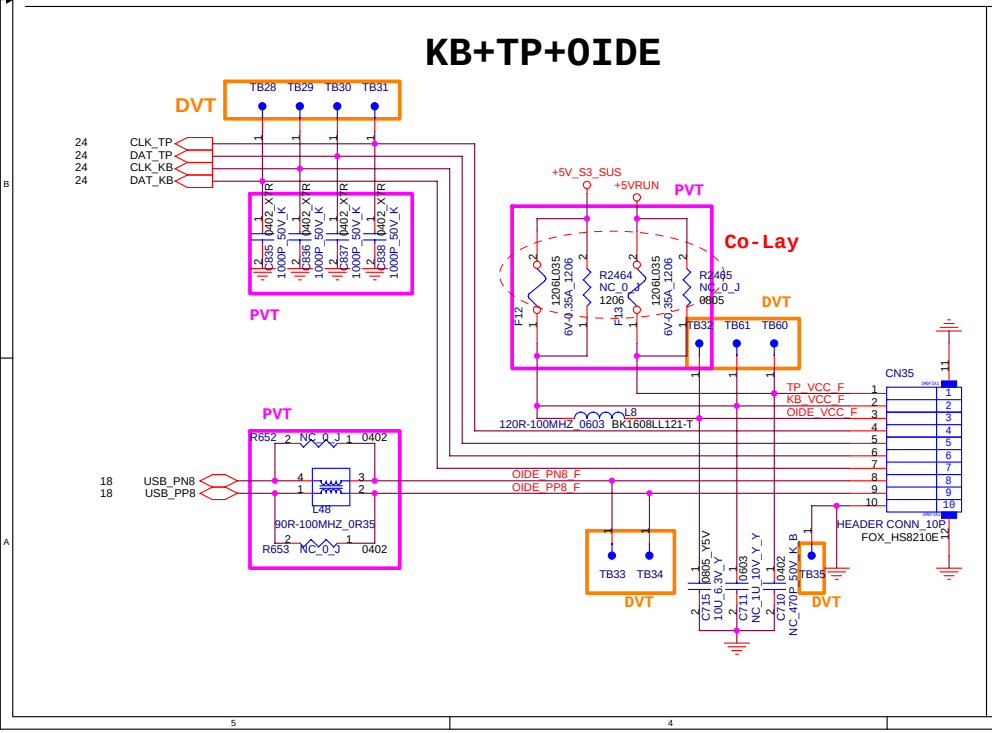

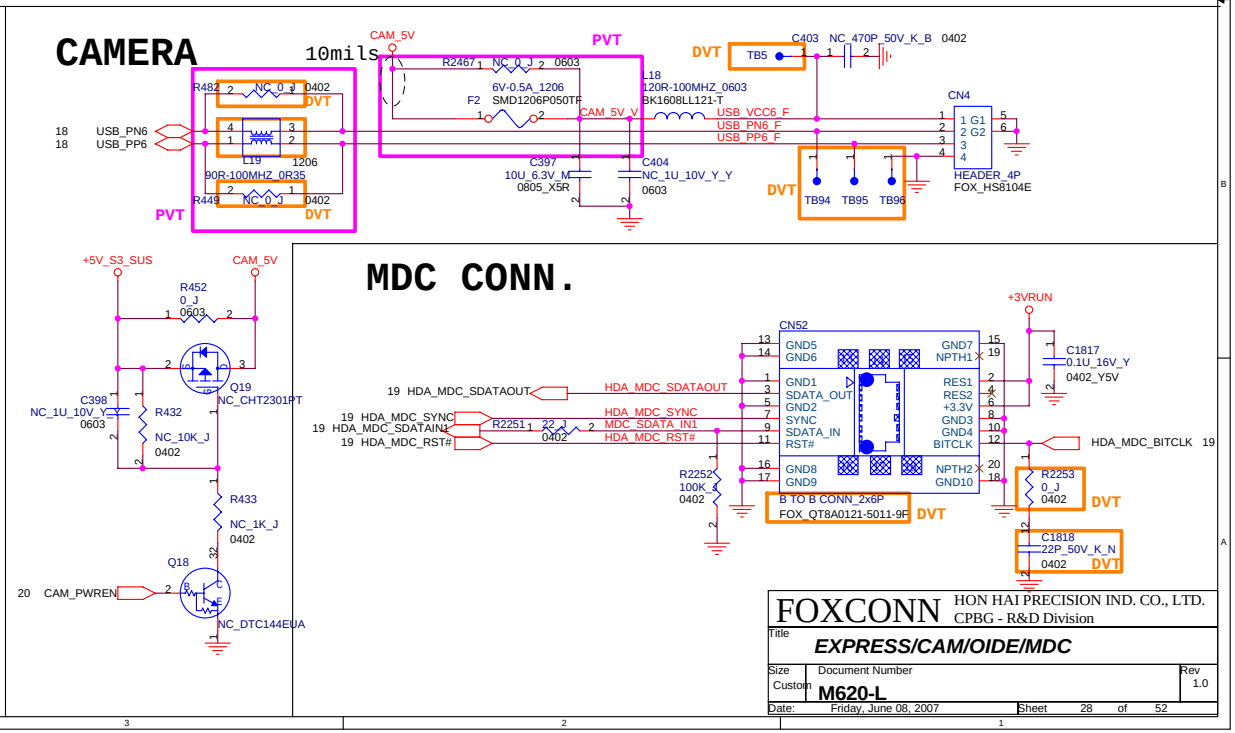

FOXCONN HON HAI PRECISION IND. CO., LTD.
CPBG - R&D Division

Title: EXPRESS/CAM/OIDE/MDC

Size	Document Number	Rev
Custom	M620-L	1.0

Date: Friday, June 08, 2007 Sheet 28 of 52

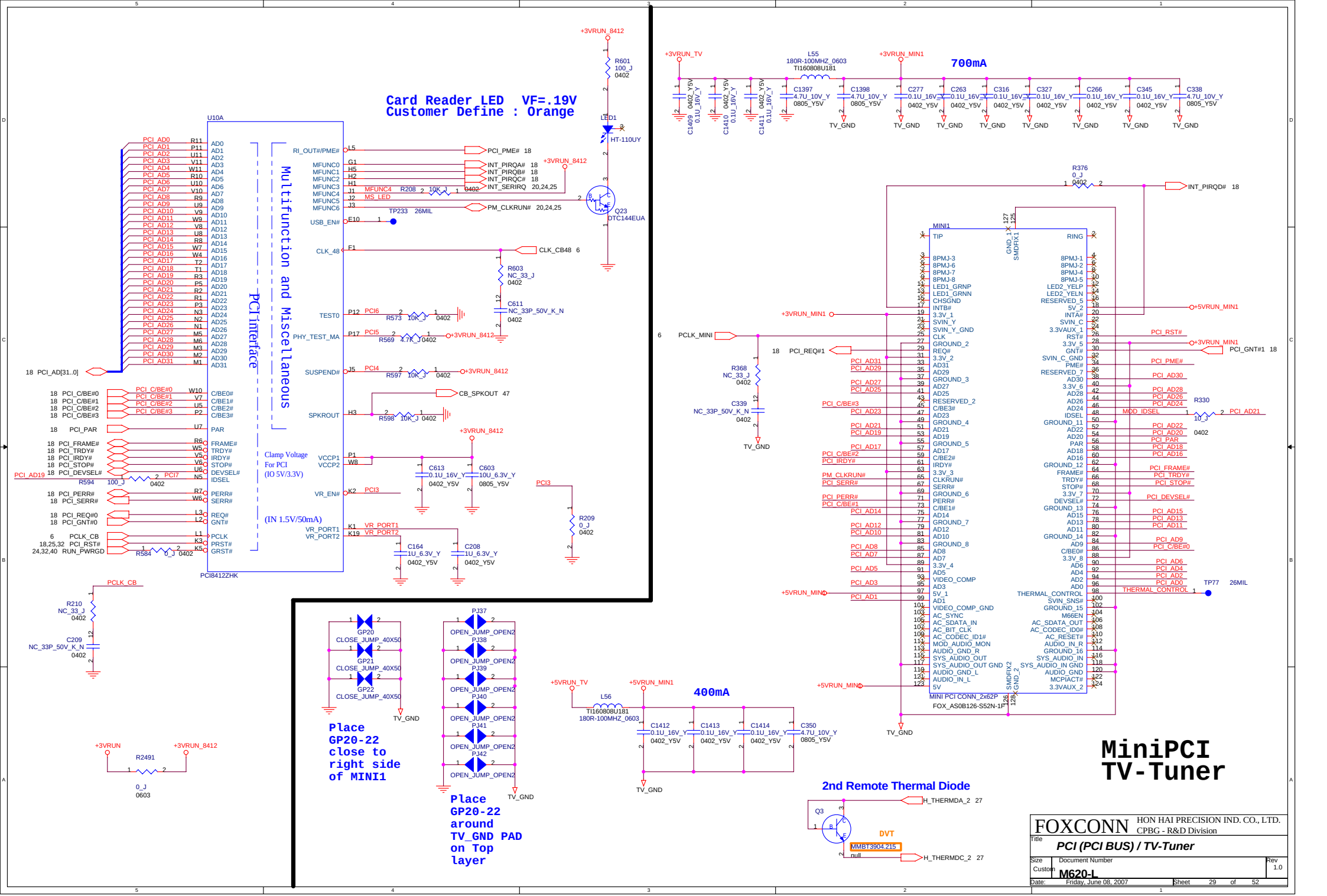
Card Reader LED VF=.19V
Customer Define : Orange
U10A
PCI interface
Multifunction and Miscellaneous
PCI8412ZHK
Clamp Voltage For PCI (IO 5V/3.3V)
(IN 1.5V/50mA)
700mA
400mA
MINI1
MINI PCI CONN_2x62P
FOX_AS0B126-S52N-1F
Place GP20-22 close to right side of MINI1
Place GP20-22 around TV_GND PAD on Top layer
2nd Remote Thermal Diode
DVT
MiniPCI TV-Tuner
FOXCONN
HON HAI PRECISION IND. CO., LTD.
CPBG - R&D Division
Title
PCI (PCI BUS) / TV-Tuner
Size Custom
Document Number M620-L
Rev 1.0
Date: Friday, June 08, 2007
Sheet 29 of 52

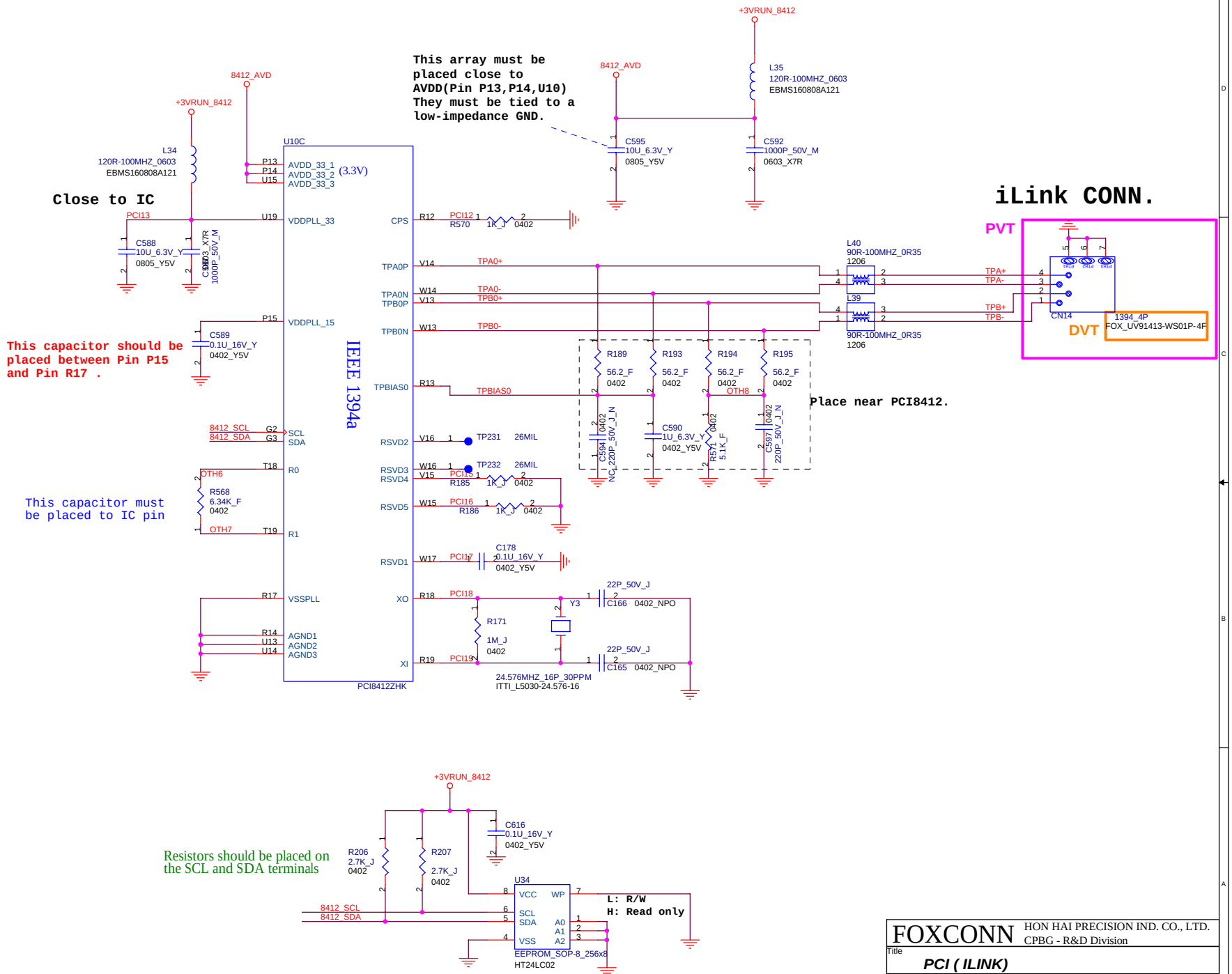

FOXCONN	HON HAI PRECISION IND. CO., LTD. CPBG - R&D Division	
Title	PCI (ILINK)	
Size A3	Document Number M620-L	Rev 1.0
Date: Friday, June 08, 2007	Sheet 30 of 52	

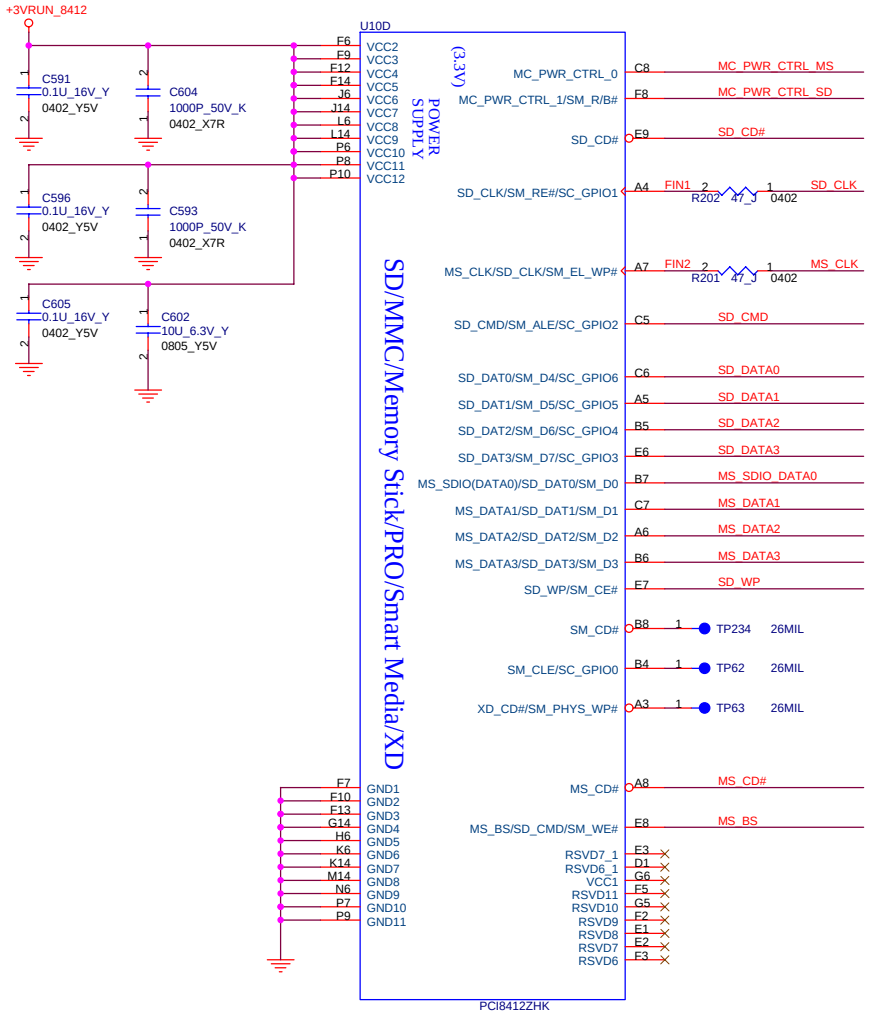

SD

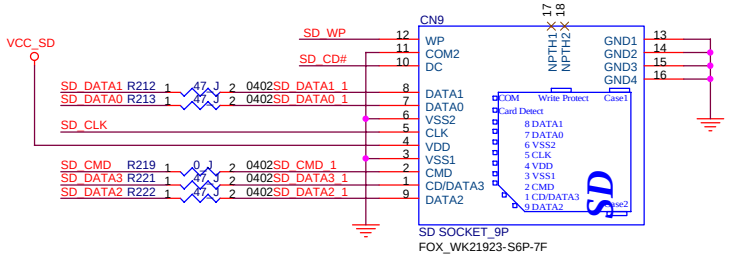

MS Duo

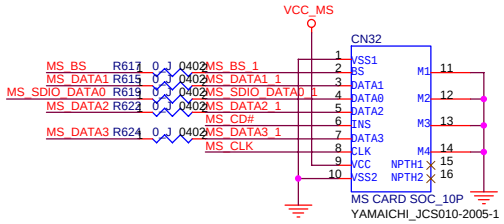

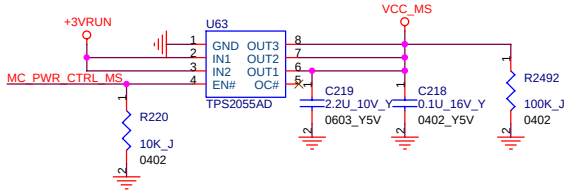

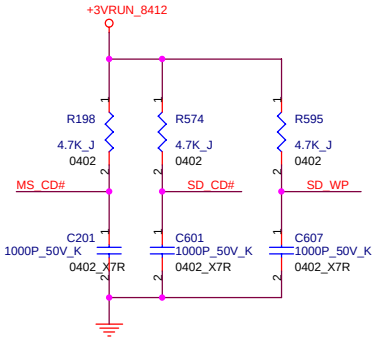

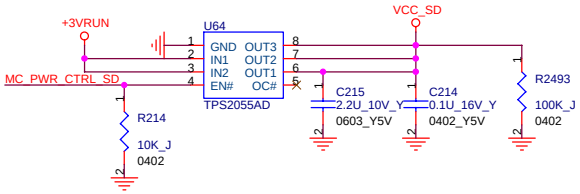

FOXCONN	HON HAI PRECISION IND. CO., LTD. CPBG - R&D Division	
Title	PCI (MS-DUO/SD)	
Size A3	Document Number M620-L	Rev 1.0
Date: Friday, June 08, 2007	Sheet 31 of 52	

PCMCIA CONN.

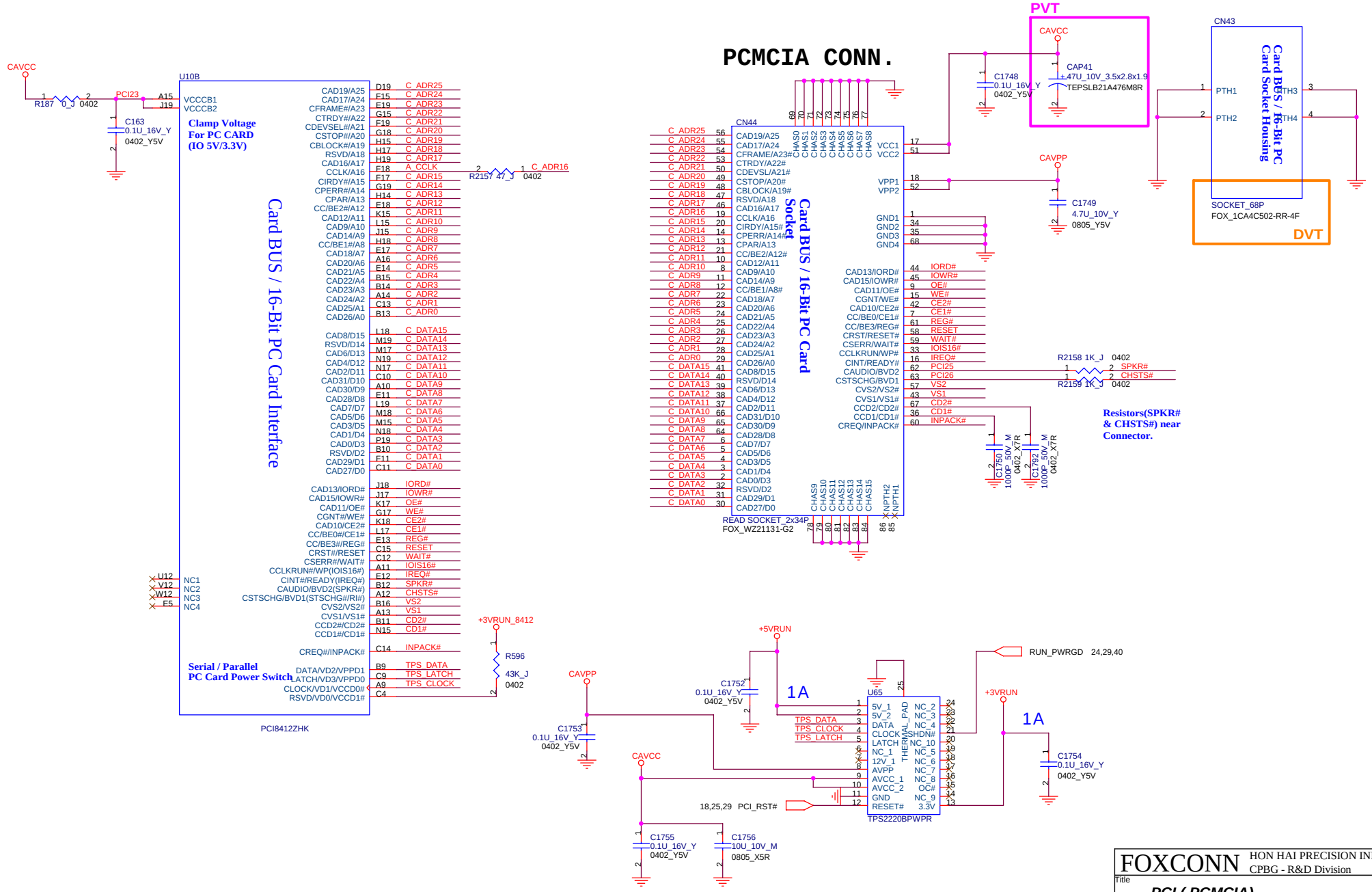

FOXCONN	HON HAI PRECISION IND. CO., LTD. CPBG - R&D Division	
Title	PCI (PCMCIA)	
Size A3	Document Number M620-L	Rev 1.0
Date: Friday, June 08, 2007	Sheet 32 of 52	

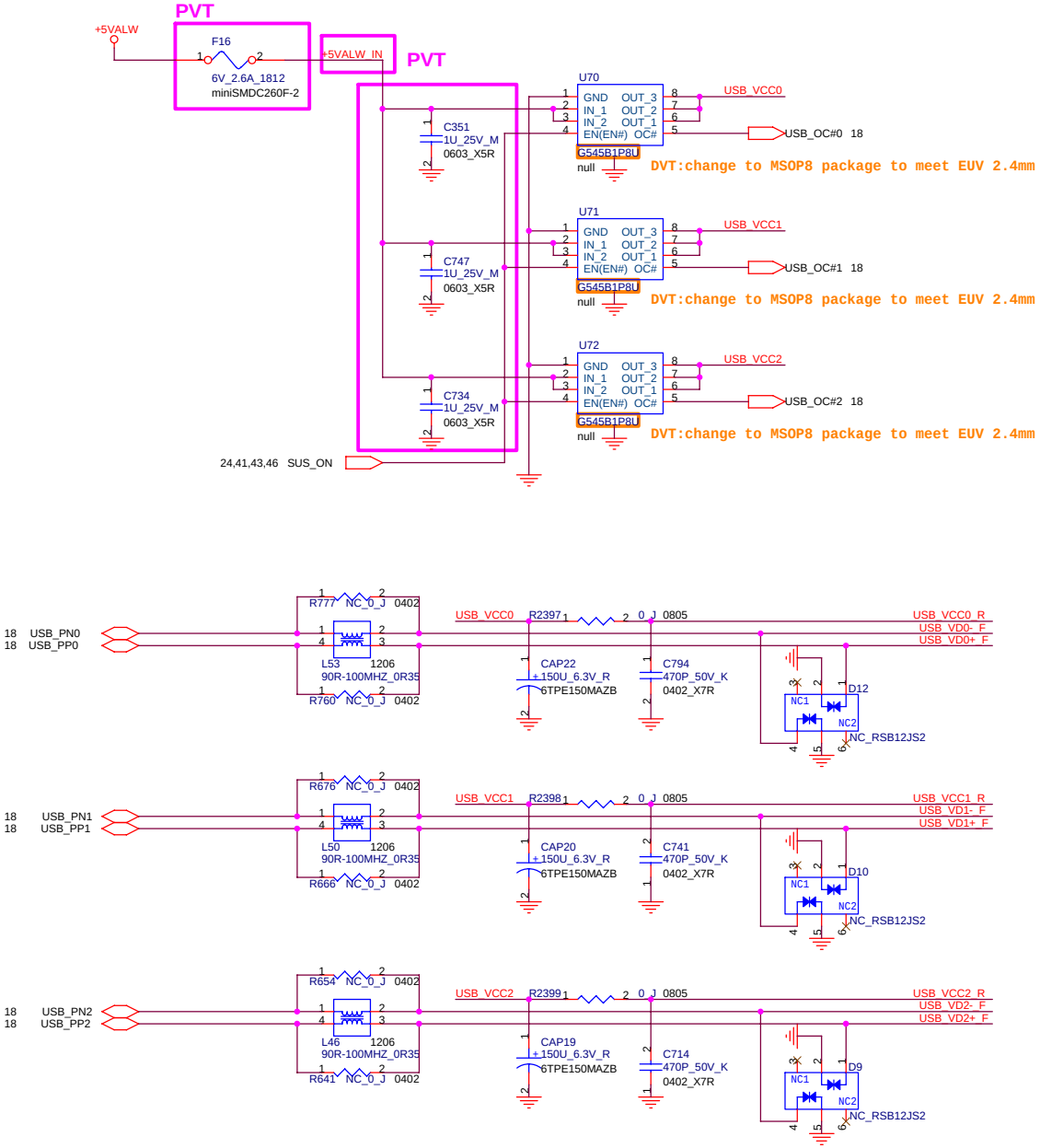

REAR USB CONN X 3

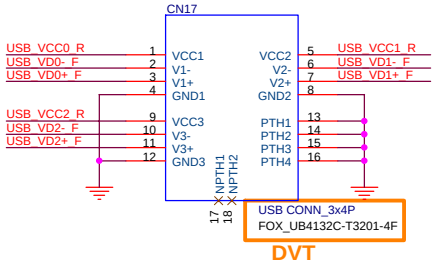

FOXCONN	HON HAI PRECISION IND. CO., LTD. CPBG - R&D Division	
Title	***USB2.0/DOCKING CONN.***	
Size A3	Document Number **M620-L**	Rev 1.0
Date: Friday, June 08, 2007	Sheet 33 of 52	

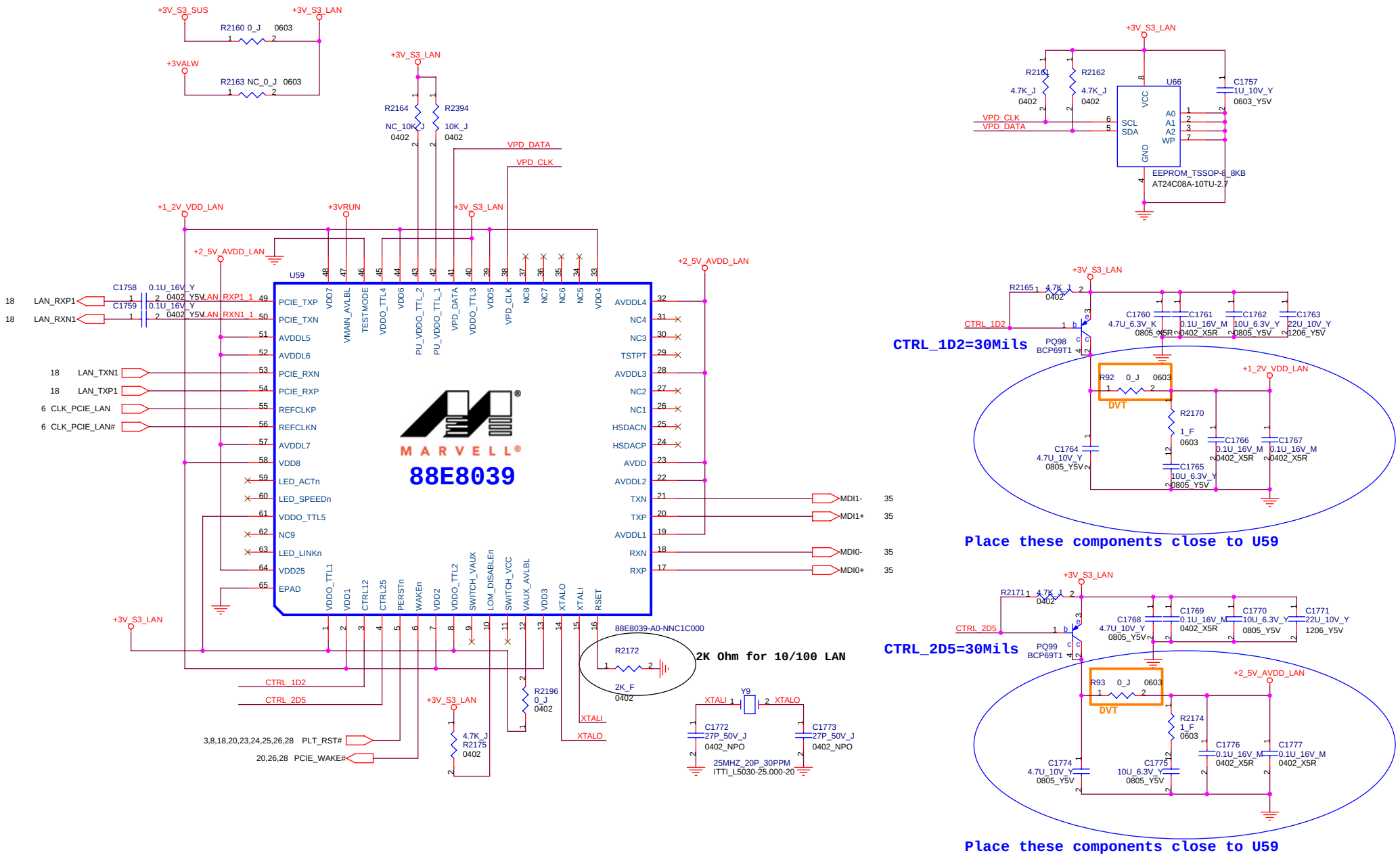

FOXCONN	HON HAI PRECISION IND. CO., LTD. CPBG - R&D Division		
Title	*Marvell_LAN (1/2)*		
Size A3	Document Number **M620-L**		Rev 1.0
Date: Friday, June 08, 2007	Sheet 34 of 52		

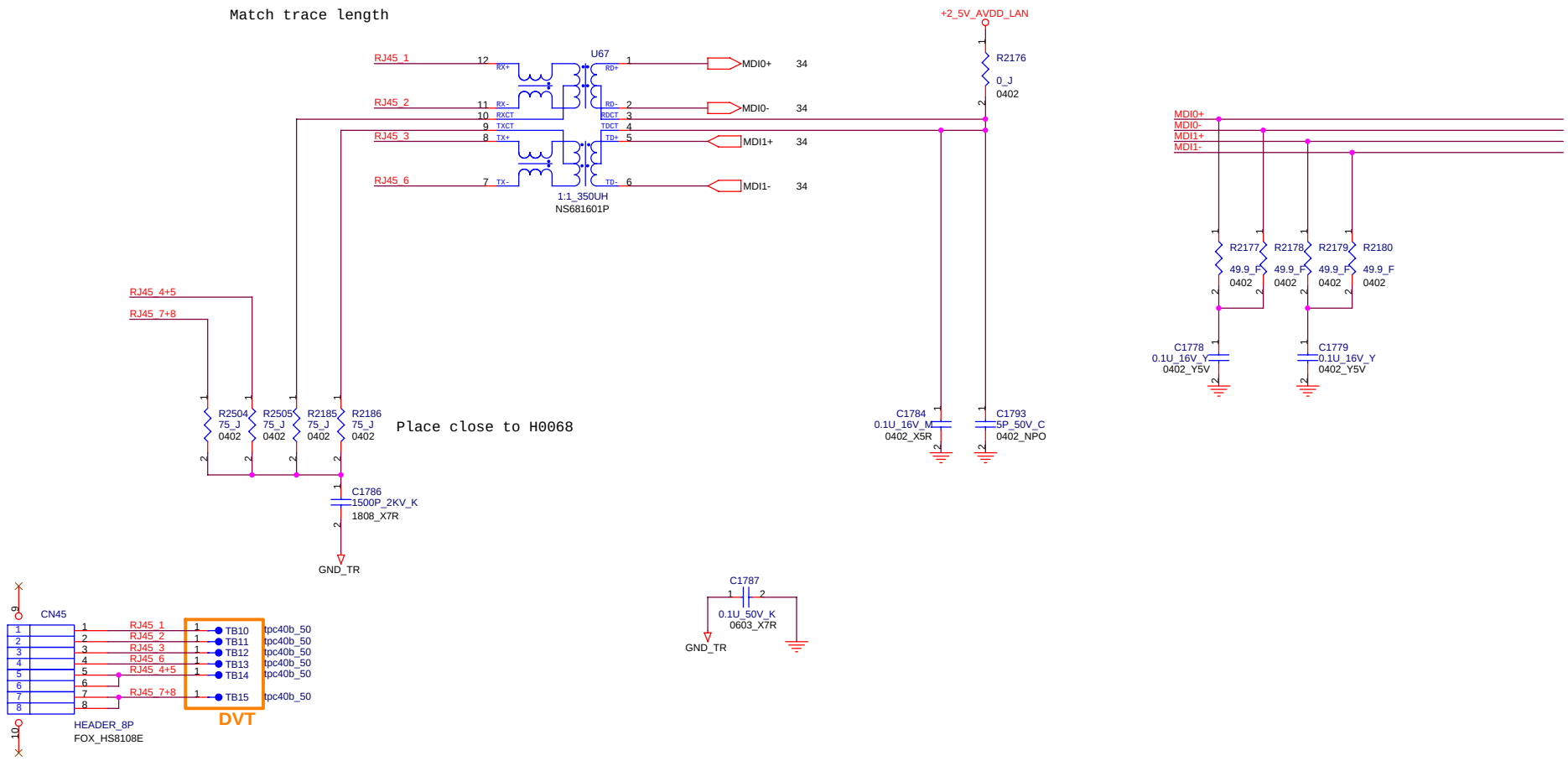

FOXCONN	HON HAI PRECISION IND. CO., LTD. CPBG - R&D Division	
Title	***Marvell_LAN (2/2)***	
Size A3	Document Number **M620-L**	Rev 1.0
Date: Friday, June 08, 2007	Sheet 35 of 52	

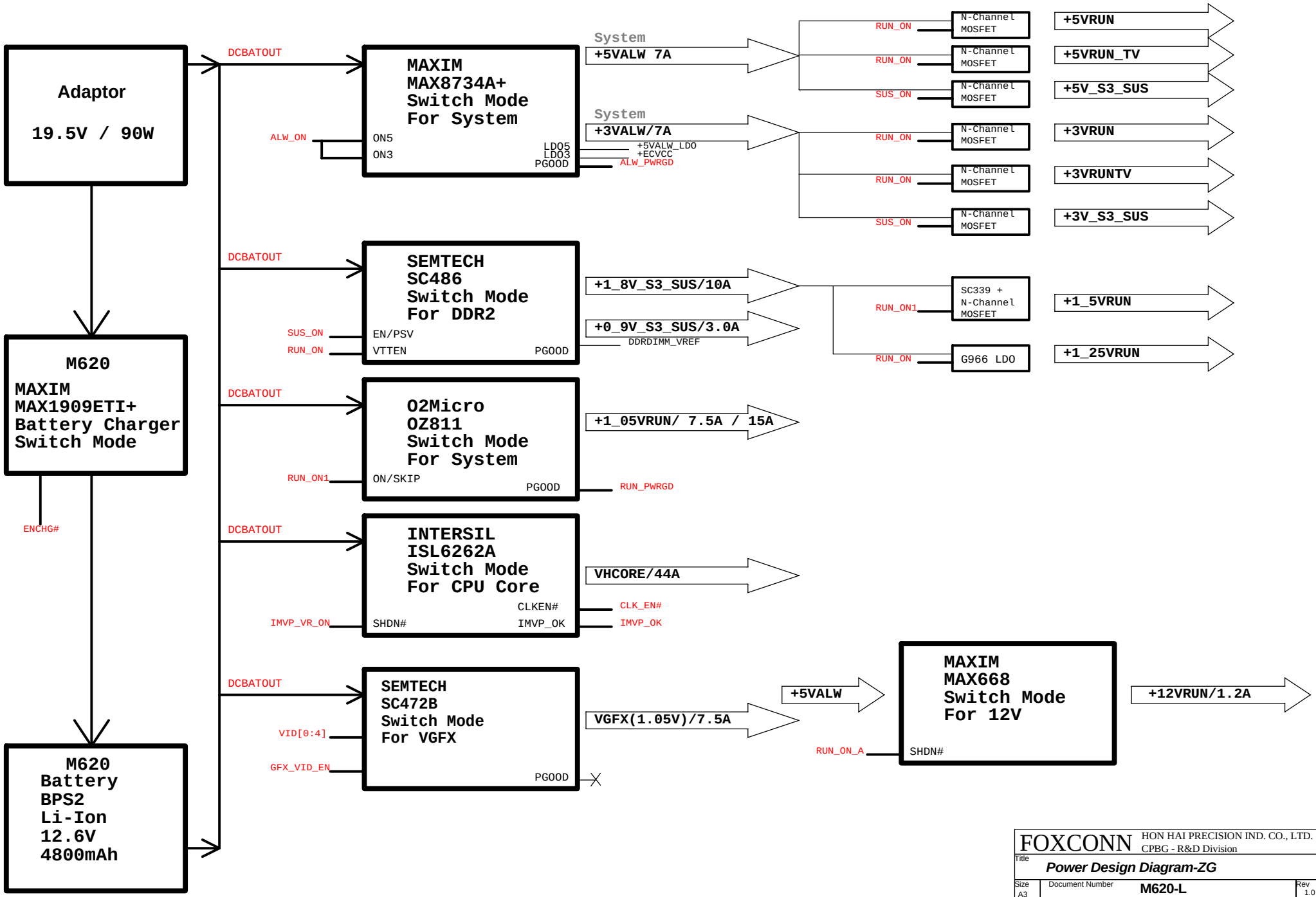

FOXCONN HON HAI PRECISION IND. CO., LTD.
CPBG - R&D Division

Title: *Power Design Diagram-ZG*

Size: A3 | Document Number: M620-L | Rev: 1.0

Date: Friday, June 08, 2007 | Sheet 36 of 52

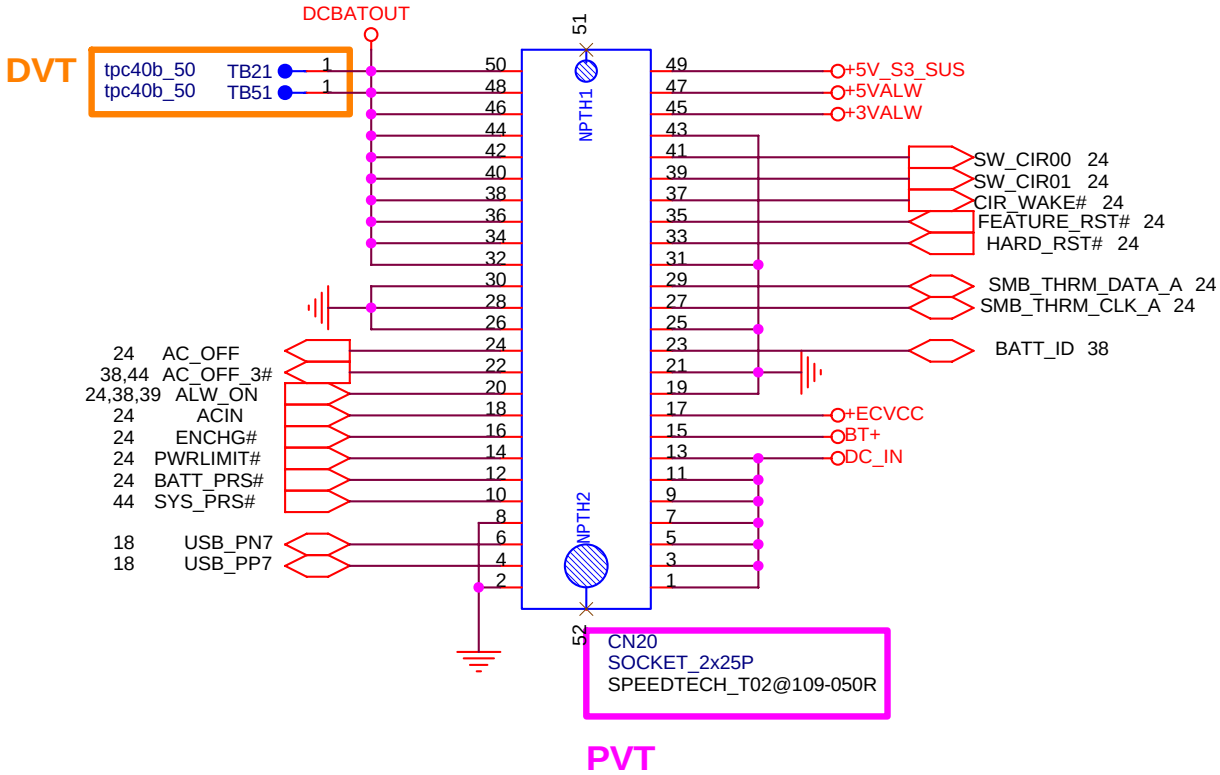

FOXCONN HON HAI PRECISION IND. CO., LTD.
CPBG - R&D Division

Title

Battery DB Connector

Size	Document Number	Rev
A	M620-L	1.0

Date: Friday, June 08, 2007 Sheet 37 of 52

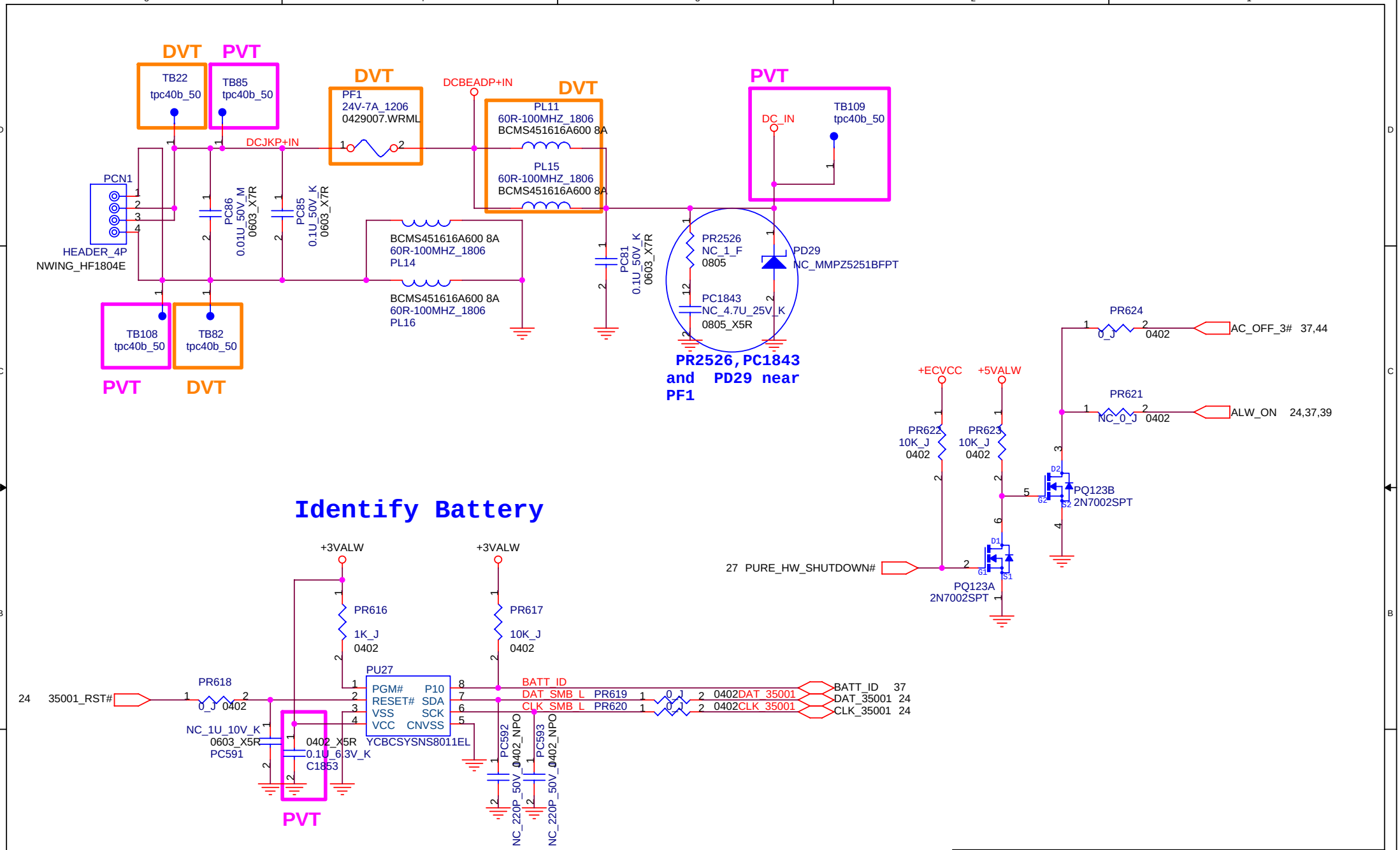

FOXCONN	HON HAI PRECISION IND. CO., LTD. CPBG - R&D Division	
Title	***DCIN***	
Size A4	Document Number **M620-L**	Rev 1.0
Date: Friday, June 08, 2007	Sheet 38 of 52	

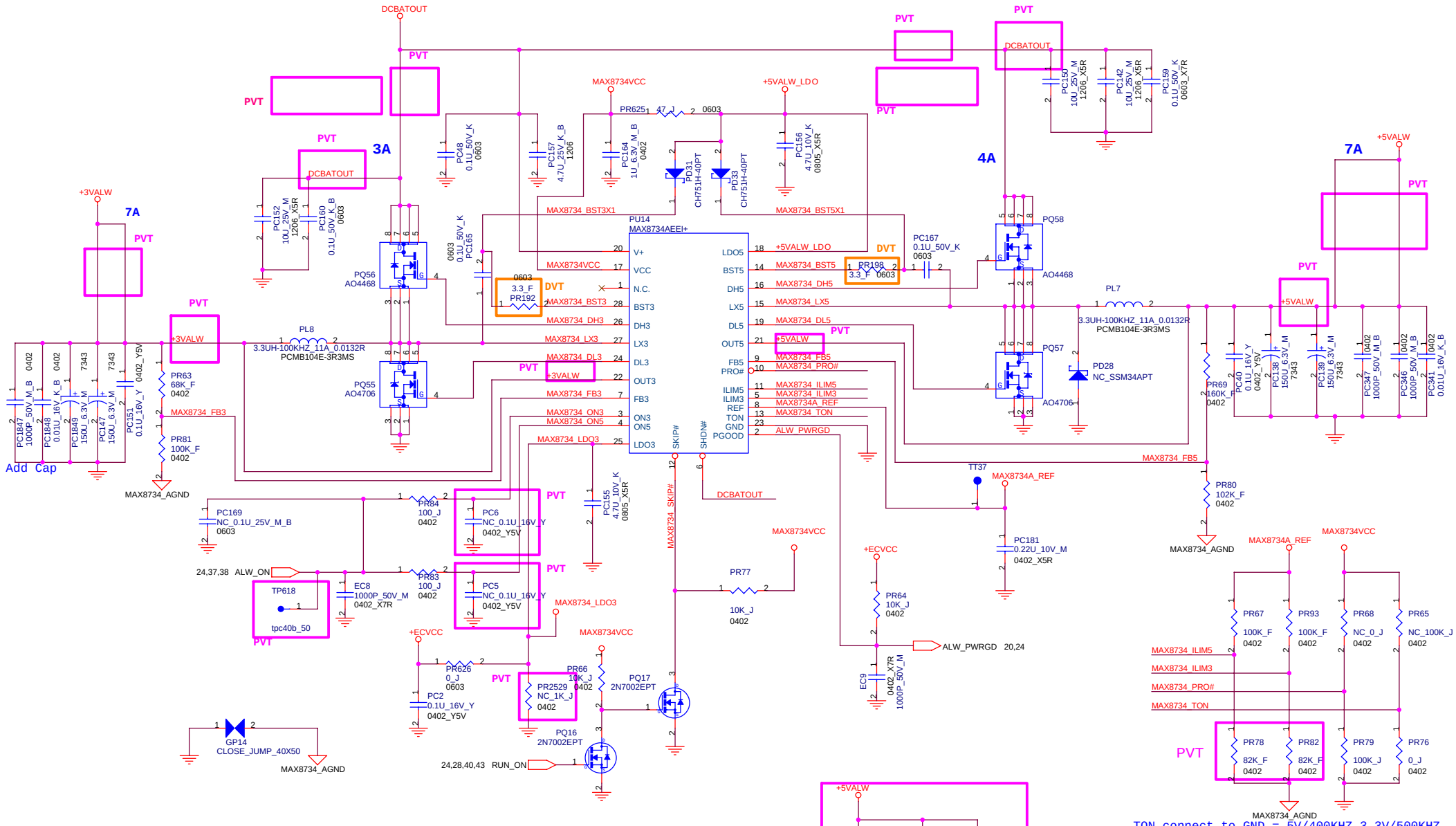

TON connect to GND = 5V/400KHZ,3.3V/500KHZ

ILIM5/ILIM3 for setting OCP

FOXCONN	HON HAI PRECISION IND. CO., LTD. CPBG - R&D Division	
Title	SYS Power (3D3VALW/5VALW)	
Size A3	Document Number M620-L	Rev 1.0
Date: Friday, June 08, 2007	Sheet 39 of 52	

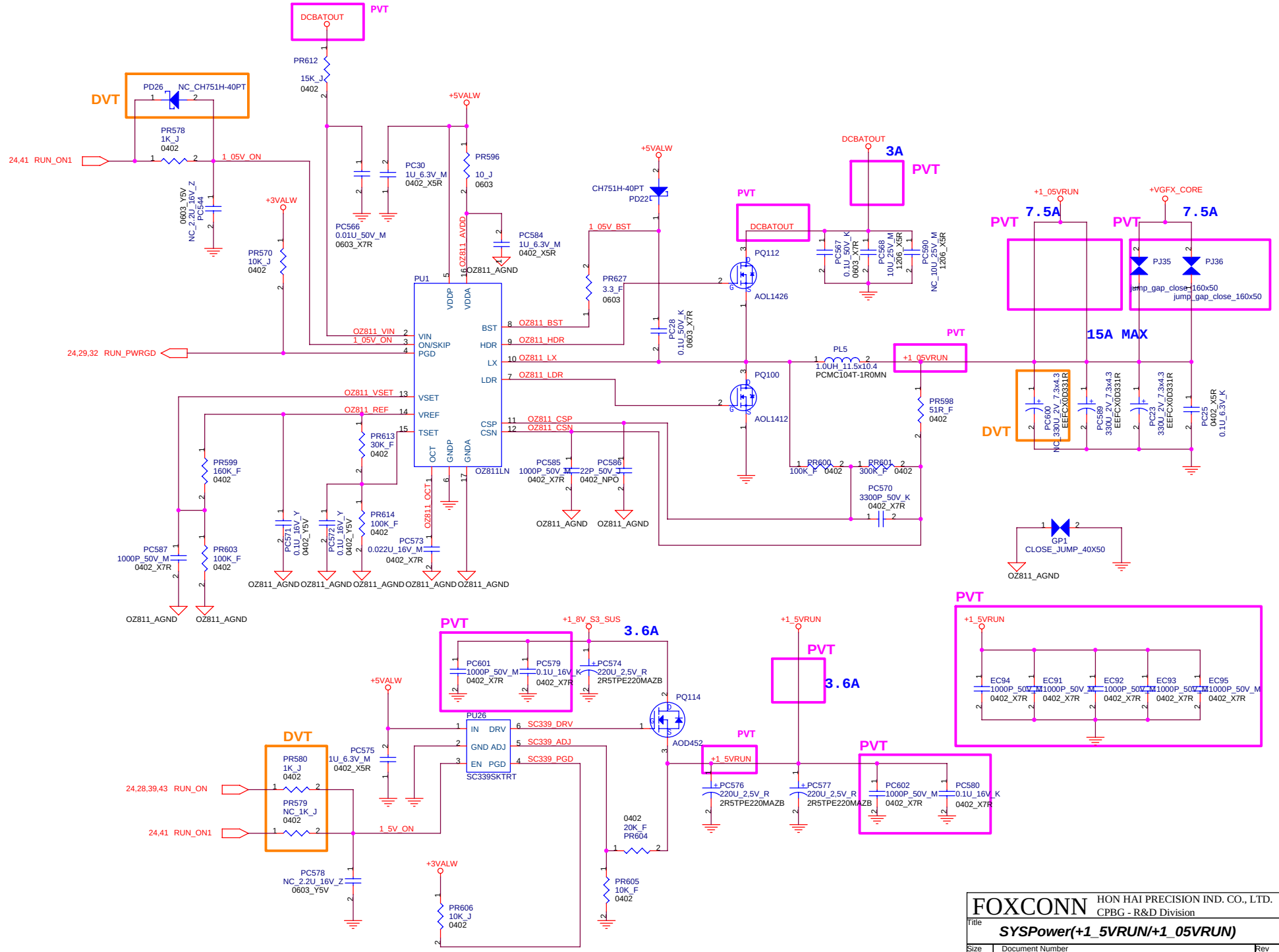

FOXCONN	HON HAI PRECISION IND. CO., LTD. CPBG - R&D Division	
Title	SYSPower(+1_5VRUN/+1_05VRUN)	
Size A3	Document Number M620-L	Rev 1.0
Date: Friday, June 08, 2007	Sheet 40 of 52	

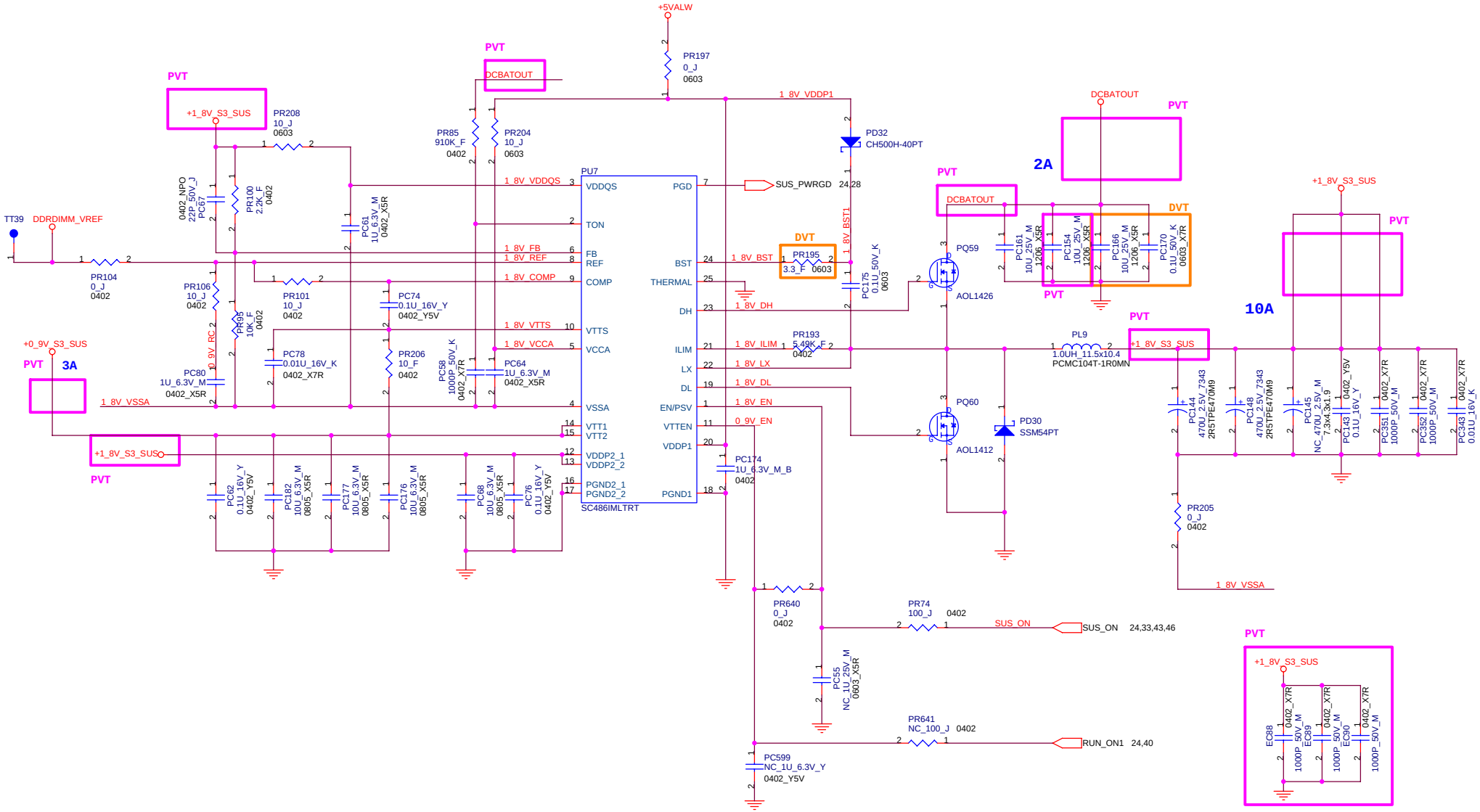

FOXCONN HON HAI PRECISION IND. CO., LTD.
CPBG - R&D Division

Title
DDR2Power(+1_8V_S3_SUS/+0_9V_S3_SUS)

Size	Document Number	Rev
A3	M620-L	1.0

Date: Friday, June 08, 2007 Sheet 41 of 52

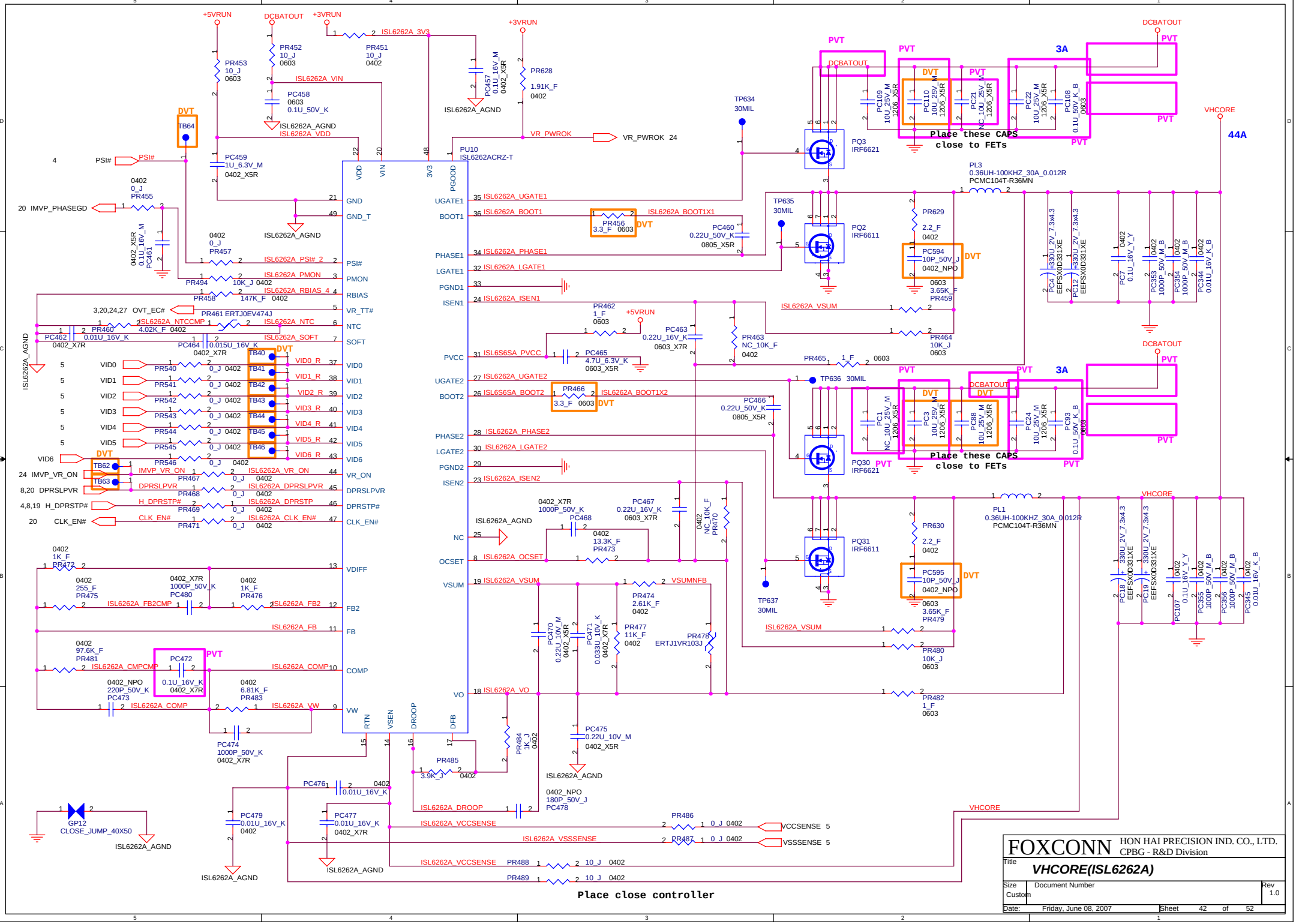

FOXCONN HON HAI PRECISION IND. CO., LTD.
CPBG - R&D Division

Title: VHCORE(ISL6262A)

Size: Custom | Document Number | Rev 1.0

Date: Friday, June 08, 2007 | Sheet 42 of 52

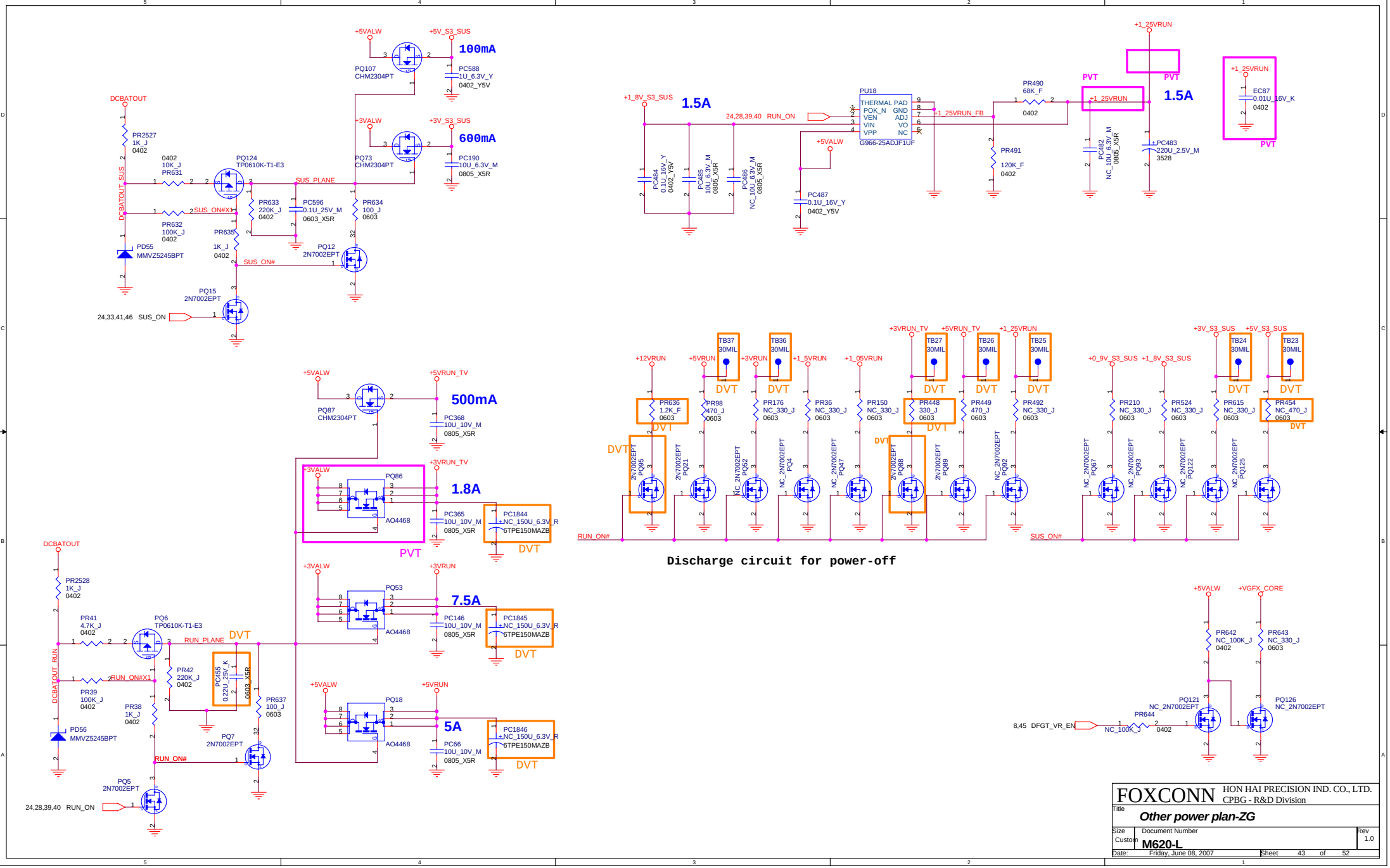
+5VALW
+5V_S3_SUS
100mA
PQ107
CHM2304PT
PC588
1U_6.3V_Y
0402_Y5V
DCBATOUT
PR2527
1K_J
0402
+3VALW
+3V_S3_SUS
600mA
PQ124
TP0610K-T1-E3
PQ73
CHM2304PT
PC190
10U_6.3V_M
0805_X5R
DCBATOUT_SUS
SUS_PLANE
SUS_ON#X1
PR632
100K_J
0402
PR633
220K_J
0402
PC596
0.1U_25V_M
0603_X5R
PR634
100_J
0603
PD55
MMVZ5245BPT
PR635
1K_J
0402
PQ12
2N7002EPT
SUS_ON#
PQ15
2N7002EPT
24,33,41,46 SUS_ON
+1_8V_S3_SUS
1.5A
24,28,39,40 RUN_ON
PU18
THERMAL PAD
POK_N GND
VEN ADJ
VIN VO
VPP NC
G966-25ADJF1UF
+1_25VRUN_FB
+5VALW
PC484
0.1U_16V_Y
0402_Y5V
PC485
10U_6.3V_M
0805_X5R
PC486
NC_10U_6.3V_M
0805_X5R
PC487
0.1U_16V_Y
0402_Y5V
PR490
68K_F
0402
PR491
120K_F
0402
+1_25VRUN
PVT
1.5A
PC482
NC_10U_6.3V_M
0805_X5R
PC483
220U_2.5V_M
3528
EC87
0.01U_16V_K
0402
+5VALW
+5VRUN_TV
500mA
PQ87
CHM2304PT
PC368
10U_10V_M
0805_X5R
+3VALW
+3VRUN_TV
PQ86
AO4468
1.8A
PC365
10U_10V_M
0805_X5R
PC1844
NC_150U_6.3V_R
6TPE150MAZB
DVT
PVT
+3VALW
+3VRUN
PQ53
AO4468
7.5A
PC146
10U_10V_M
0805_X5R
PC1845
NC_150U_6.3V_R
6TPE150MAZB
+5VALW
+5VRUN
PQ18
AO4468
5A
PC66
10U_10V_M
0805_X5R
PC1846
NC_150U_6.3V_R
6TPE150MAZB
DCBATOUT
PR2528
1K_J
0402
PR41
4.7K_J
0402
PQ6
TP0610K-T1-E3
RUN_PLANE
DCBATOUT_RUN
RUN_ON#X1
PR39
100K_J
0402
PR38
1K_J
0402
PR42
220K_J
0402
PC455
0.22U_25V_K
0603_X5R
PR637
100_J
0603
PD56
MMVZ5245BPT
PQ7
2N7002EPT
RUN_ON#
PQ5
2N7002EPT
24,28,39,40 RUN_ON
+12VRUN
+5VRUN
+3VRUN
+1_5VRUN
+1_05VRUN
+3VRUN_TV
+5VRUN_TV
+1_25VRUN
TB37
30MIL
TB36
30MIL
TB27
30MIL
TB26
30MIL
TB25
30MIL
PR636
1.2K_F
0603
PR98
470_J
0603
PR176
NC_330_J
0603
PR36
NC_330_J
0603
PR150
NC_330_J
0603
PR448
330_J
0603
PR449
470_J
0603
PR492
NC_330_J
0603
2N7002EPT
PQ95
2N7002EPT
PQ21
NC_2N7002EPT
PQ52
NC_2N7002EPT
PQ4
NC_2N7002EPT
PQ47
2N7002EPT
PQ88
2N7002EPT
PQ89
NC_2N7002EPT
PQ92
RUN_ON#
+0_9V_S3_SUS
+1_8V_S3_SUS
+3V_S3_SUS
+5V_S3_SUS
TB24
30MIL
TB23
30MIL
PR210
NC_330_J
0603
PR524
NC_330_J
0603
PR615
NC_330_J
0603
PR454
NC_470_J
0603
NC_2N7002EPT
PQ67
NC_2N7002EPT
PQ93
NC_2N7002EPT
PQ122
NC_2N7002EPT
PQ125
SUS_ON#
Discharge circuit for power-off
+5VALW
+VGFX_CORE
PR642
NC_100K_J
0402
PR643
NC_330_J
0603
PQ121
NC_2N7002EPT
PQ126
NC_2N7002EPT
PR644
NC_100K_J
0402
8,45 DFGT_VR_EN
FOXCONN
HON HAI PRECISION IND. CO., LTD.
CPBG - R&D Division
Title
Other power plan-ZG
Size
Custom
Document Number
M620-L
Rev
1.0
Date: Friday, June 08, 2007
Sheet 43 of 52

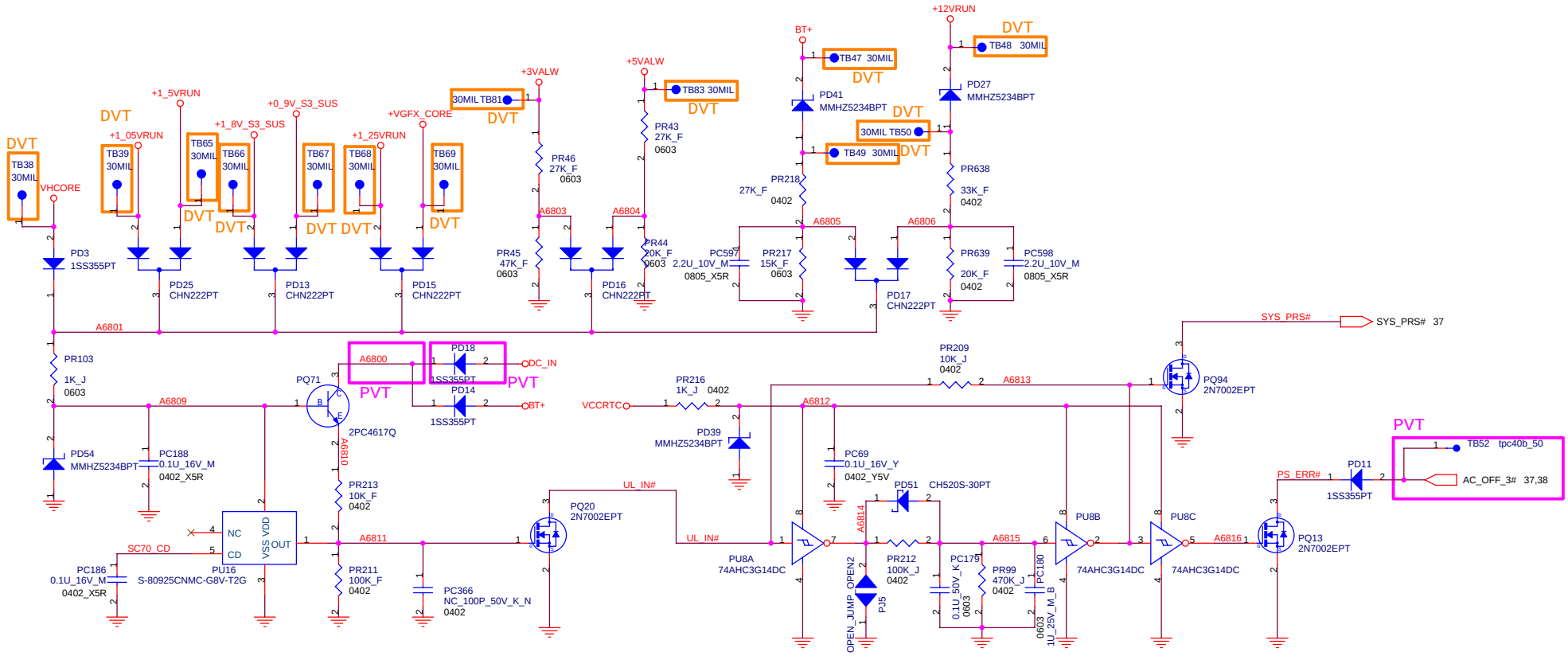

FOXCONN	HON HAI PRECISION IND. CO., LTD. CPBG - R&D Division	
Title	***OVP protection-ZG***	
Size A3	Document Number **M620-L**	Rev 1.0
Date: Friday, June 08, 2007	Sheet 44 of 52	

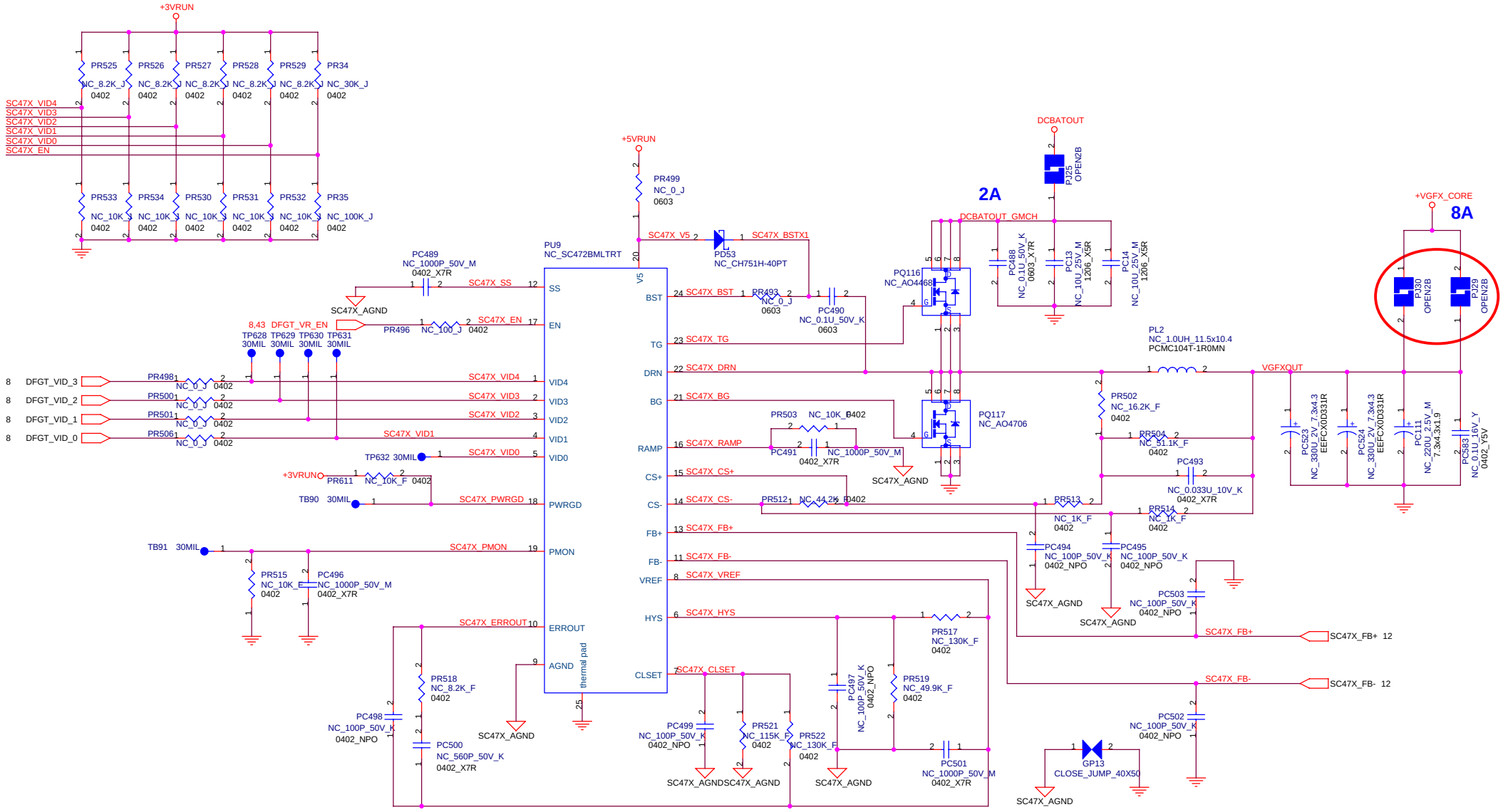

Dummy This page! (2007/03/28)

FOXCONN	HON HAI PRECISION IND. CO., LTD. CPBG - R&D Division		
Title	GMCH POWER		
Size A3	Document Number M620-L		Rev 1.0
Date: Friday, June 08, 2007	Sheet 45 of 52		

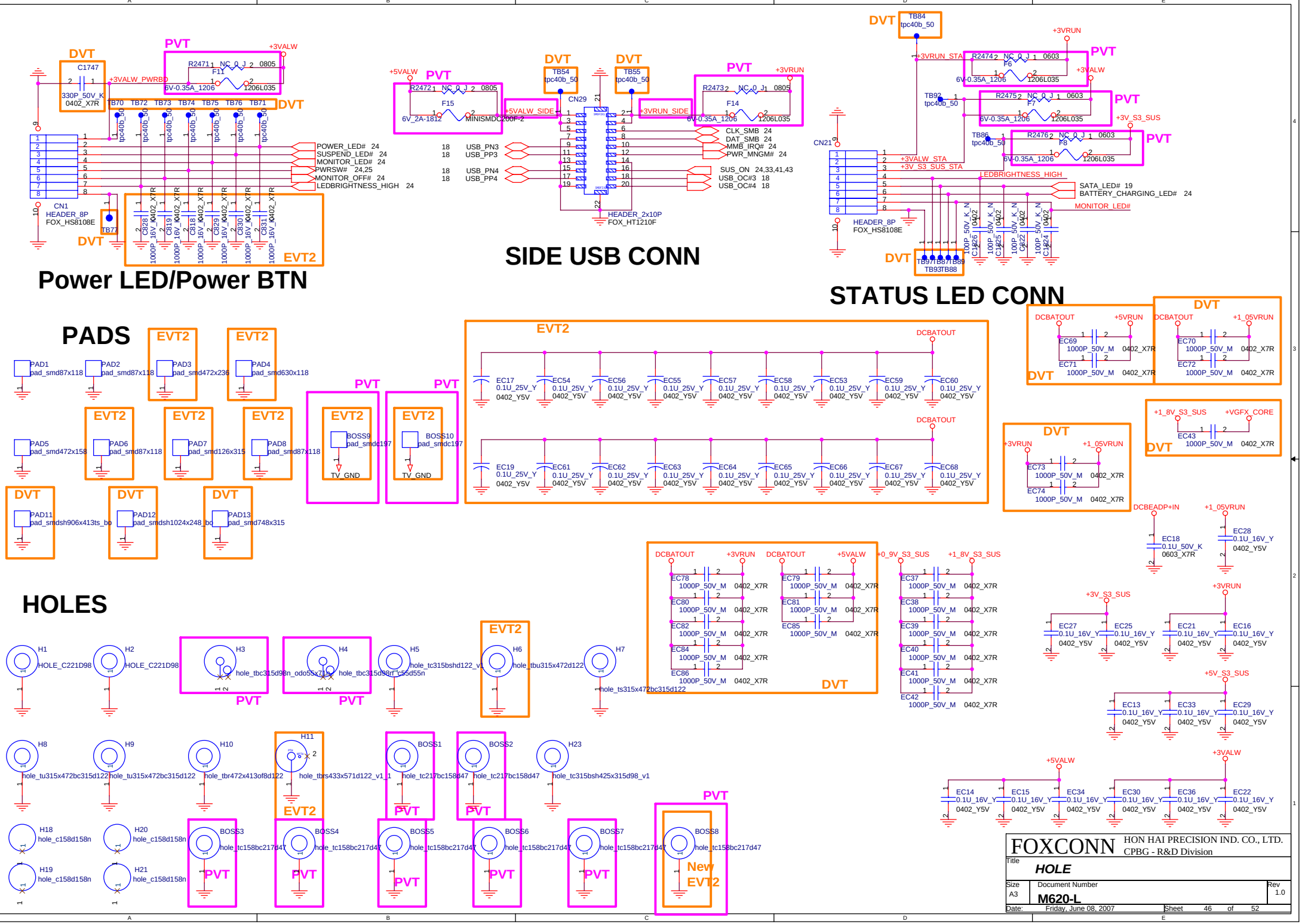
Power LED/Power BTN
SIDE USB CONN
STATUS LED CONN
PADS
HOLES
CN1
HEADER_8P
FOX_HS8108E
CN29
HEADER_2x10P
FOX_HT1210F
CN21
HEADER_8P
FOX_HS8108E
POWER_LED# 24
SUSPEND_LED# 24
MONITOR_LED# 24
PWRSW# 24,25
MONITOR_OFF# 24
LEDBRIGHTNESS_HIGH 24
USB_PN3 18
USB_PP3 18
USB_PN4 18
USB_PP4 18
CLK_SMB 24
DAT_SMB 24
MMB_IRQ# 24
PWR_MNGM# 24
SUS_ON 24,33,41,43
USB_OC#3 18
USB_OC#4 18
SATA_LED# 19
BATTERY_CHARGING_LED# 24
MONITOR_LED#
LEDBRIGHTNESS_HIGH
+3VALW_PWRBD
+3VALW
+5VALW
+5VALW_SIDE
+3VRUN
+3VRUN_SIDE
+3VRUN_STA
+3VALW_STA
+3V_S3_SUS
+3V_S3_SUS_STA
DCBATOUT
DCBEADP+IN
+1_05VRUN
+1_8V_S3_SUS
+VGFX_CORE
+0_9V_S3_SUS
+1_8V_S3_SUS
+5V_S3_SUS
DVT
PVT
EVT2
New EVT2
FOXCONN
HON HAI PRECISION IND. CO., LTD.
CPBG - R&D Division
Title
HOLE
Size
A3
Document Number
M620-L
Rev
1.0
Date: Friday, June 08, 2007
Sheet 46 of 52

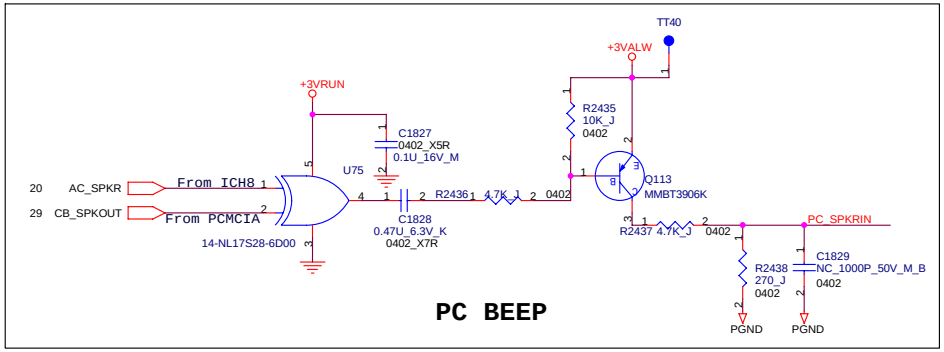

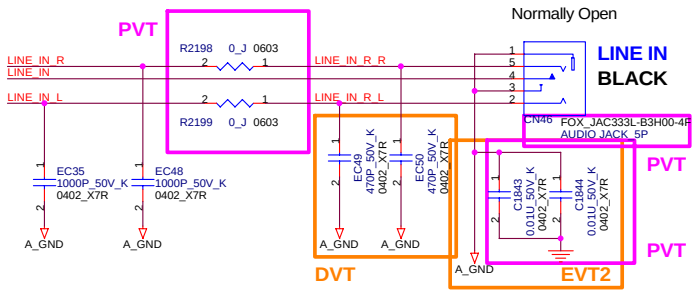

C1834,C1835,R2483,2484,2485 and R2486
Dummy when Audio DB was placed

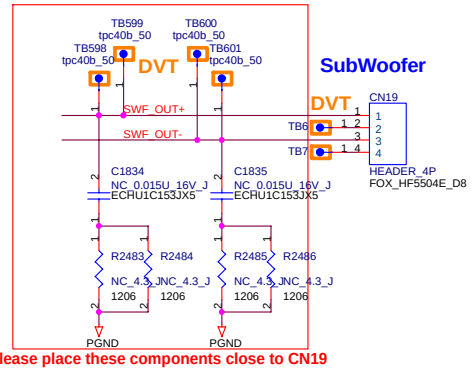

1.Please place these components close to CN19
2.Trace: SWF_OUT+/- and PGND layout width=40Mils

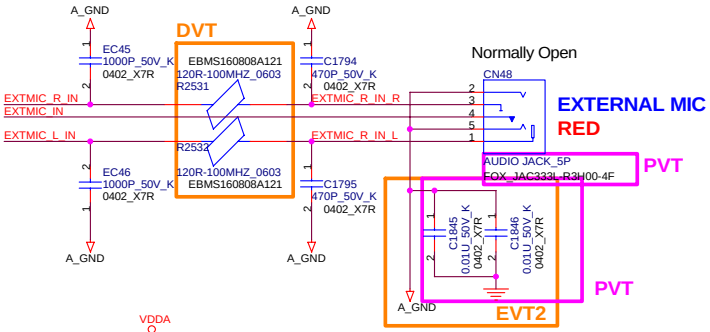

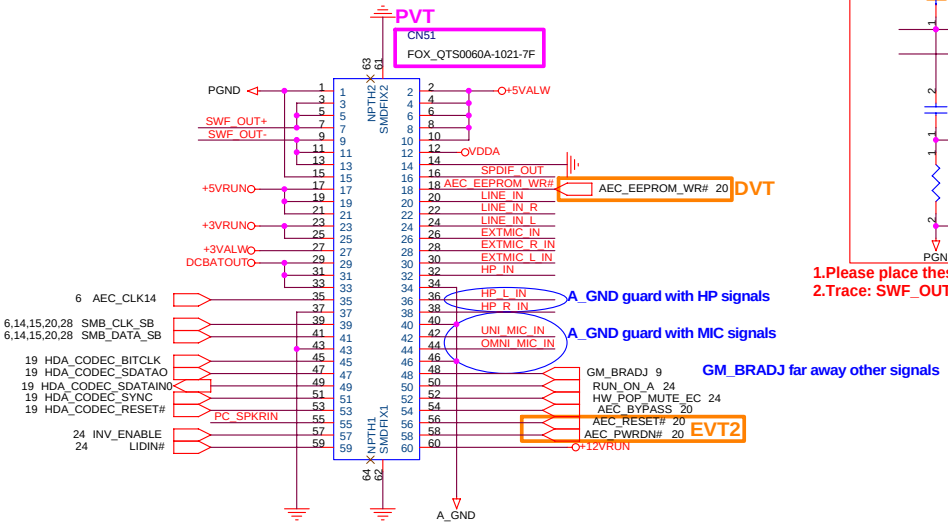

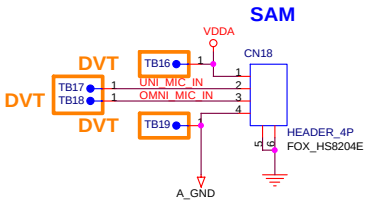

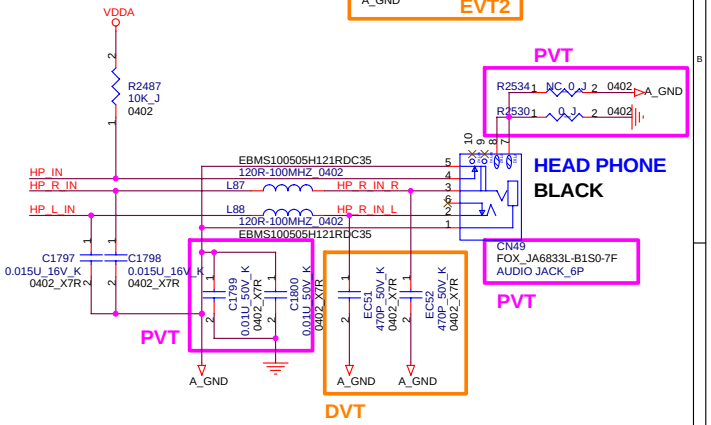

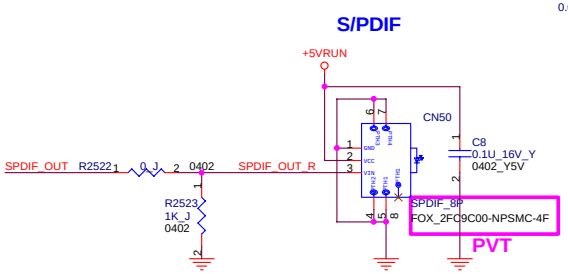

FOXCONN	HON HAI PRECISION IND. CO., LTD. CPBG - R&D Division	
Title	**Audio Board /Audio Jack/MDC**	
Size: Custom	Document Number: **M620-L**	Rev: 1.0
Date: Friday, June 08, 2007	Sheet 47 of 52	

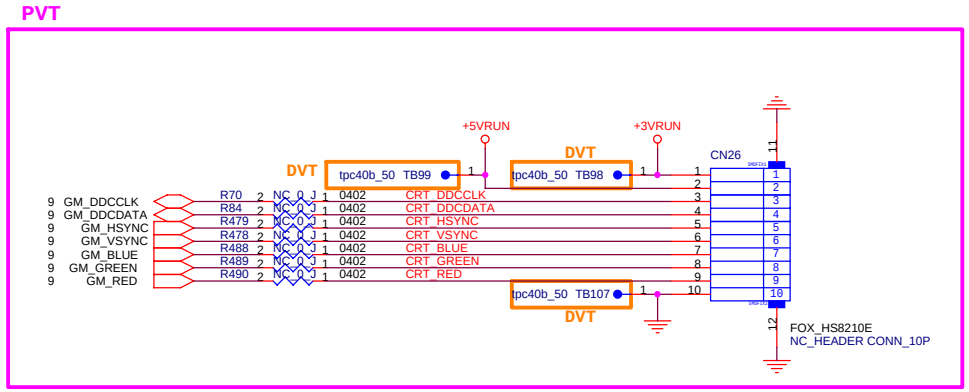

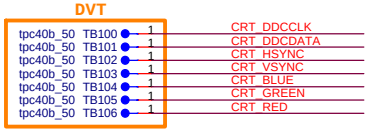

FOXCONN	HON HAI PRECISION IND. CO., LTD. CPBG - R&D Division	
Title	***CRT***	
Size A3	Document Number **M620-L**	Rev 1.0
Date: Friday, June 08, 2007	Sheet 48 of 52	

2006/12/15
P.6:Change C1631,1633,1637,1639,1644,1646 from 25V to 6.3V range
P.9:Add R1839 10K Ohm pull-down
P.9:Add R1841 100K Ohm pull-down
P.17:Add C1836-1841 dummy 10pF caps for EMI used
P.17:Modify LVDS power from G5841 to G5281 and delete L91
P.24:Exchange SPI ROM trace resistor R2411 for SDI and SDO
P.25:Exchange SPI ROM SDI and SDO trace
P.25:Dummy this page
P.26:Dummy ISA ROM and ISA Debug port
P.27:Add Power plane select function R632,636,637,2482 for customer request
P.29:Change CN28 symbol
P.30:Change R2491 from 1206 to 0603 size (sync to M630/640)
P.34:Change back USB Power from SUS power to ALW power
P.34:Update USB Vertical conn P/N
P.35:Add +3VALW power R2163 0R Ohm for customer request
P.35:Change back 1.8V to 2.5V power (follow vendor suggestion)
P.36:Change CN45 from HS8104E to HS8108E
P.36:Add R2504,2505 75R to GND for LAN Design rule
P.47:Update all HOLES and PADS
P.47:Change back Side-USB Power from SUS power to ALW power
P.48:Delete U74 and net:CSPDIF for customer request
P.48:Change CN46,48 connector type=normal open and delete R2197,R2200

2006/12/16
P.6:Delete R1994,L83~85,C1635,1641,1649 (By ICS FAE suggest)
P.9:Change R1471 and R1475 from 39R to 30R(follow Schematic check list V1.5)
P.20:Exchange GPIO24 and GPIO28 by S/W require
P.24:Move R1930 to P.20 and change 47K to 10K(follow Schematic check list V1.5)
P.24:Change GPIO pin by S/W require
P.31:Update CN14 P/N
P.32:Update CN32 P/N
P.41:Delete PR602 and Add GP1
P.41:Change PR601 package from 0603 to0402
P.43:Change PR468 from 499R to 0R(Double same serial resistor with R1939)
P.47:Delete H16,17,22 and change H18~21 shape
P.48:Update CN50 symbol

2006/12/19
P.6:Delete PC29 (By Power require)
P.27:Add Q118,Q119,R2508,R2509 and Change +3VALW power to
+3V_EMINI_AUX power (Follow customer require)
P.27:Delete Q117,R2499 and change R2498 from 470R to 68R (Follow
Software Spec P.8)

2006/12/20
P.20:Change SW4 from HDS406E to HDS404E
P.20:Delete R2428,2429
P.24:Add SW3
P.24:Delete R2232
P.24:Delete R2237,2240,2431,2433 and Change Model ID to System ID
P.24:Change R2393,2239,2430,2432 from NC to 100K
P.25:Add RP54 for SYSTEM ID4~7
P.25:Delete R2481
P.26:Delete CN12 PIN29 (JIG_SMI#)
P.33:Update CN43 P/N
P.40:Update PQ55,56,57,58 Symbol
P.44:Update PQ18,53 Symbol
P.48:Change CN19 from SMD to DIP Type
P.48:Update CN50 part description
P.48:Add R2522,2523 and change CN50 AGND to GND (for customer require)

2006/12/21
P.24:Change GPIO signal: R2507 is connect from WLAN_EN# to HARD_RST#
P.24:Delete R2478 (Double Pull High)
P.24:Add R2481 for EC strap
P.24:Delete R1932 Pull-down resistor (HW_POP_MUTE_EC)
P.24:Change RP51 to R2526~2529 resistors
P.27:Change Q32 type with ESD protection
P.27:Change Q118 type (Change to meet SPEC)
P.27:Change NET:MINI_PCIE_+1_5V to MINI_PCIE_+1_5VRUN
P.27:Change MINI_PCIE_+3_3V to MINI_PCIE_+3_3VSUS
P.27:Add C1842 (Follow customer require)
P.39:Change PR622 connect Power from +5VALW to +ECVCC
P.39:Move B_PR2,B_PC5 and B_PD2 from ChargerBoard to MainBoard and rename to
PR2526,PC1843 and PD29 (Follow customer require)
P.42:Change PR193 from 6.8K to 5.49K (For OCP setting)
P.42:Fix PU7 PGD signal=SUS_PWRGD (Orignial is missing trace)
P.43:Change PC464 P/N from 1C-2B20153-M000 to 1C-2B20153-K000 (BOM)
P.47:Fix error CN21 Pin-7 from MONITOR_OFF# to MONITOR_LED#
P.48:Change C1797,C1798 P/N from 1C-2B20153-M000 to 1C-2B20153-K000 (BOM)

2006/12/22
P.17:Add L91 for EMI require
P.20:Change SW4 from 4-DIP to 2-DIP SMD Switch
P.24:Delete SW5
P.33:Change CAP41 package (Power team require)
P.35:Add L92,93 for EMI require
P.36:Delete CN45 Pin9,10 net from GND_TR to NC
P.48:Add R2531 and R2532 for EMI require
P.48:Add EC49 and EC50 for EMI require
P.48:Add EC51 and EC52 for EMI require
P.48:Move P.47 EC35,EC48 to this page and connect to LINE_IN_L and LINE_IN_R
P.48:Move P.47 EC45,EC46 to this page and connect to EXTMIC_R_IN and EXTMIC_L_IN

2006/12/23
P.44:Add PR2527,PD55 in SUS_ON circuit (For power spec)
P.44:Add PR2528,PD56 in RUN_ON circuit (For power spec)

2006/12/25
P.20:Add net name:ICH_CLVREF0 and ICH_CLVREF1 for layout
P.29:L3 SWAP 1,4 and 2,3 (Layout issue)
P.38:Fix CN20 NPTH connect to GND issue
P.47:Update H10,H11 Hole symbol (ME modify)
P.48:Change EC35,45,46 and EC48 from 0.01uF to 0.001uF (Customer require)
P.48:C1834,C1835,R2483,2484,2485 and R2486 Dummy (Customer require same
parts on the Audio board)

2006/12/26
P.25:Change DAT_35001,CLK_35001 net name to DAT_35001_R1,CLK_35001_R1
P.25:Delete TP612,TP620
P.25:Add R2533 and R2536 for 2nd clear button GPIO use and Add net DAT_35001_R2,CLK_35001_R2
P.46:Change PR496,PR498,PR500,PR501,PR506,PR35,PR532 to NC
P.46:Change PR526,PR529,PR530,PR531,PR533 from NC to mount
P.46:Change PR530,PR531,PR533,PR534 from 0R to 10K
P.47:Update H1,H2 footprint size (HOLE impact LVDS Connector issue)

2006/12/27
P.11:Replace R1848,R205 (missing)
P.19:Replace R2507 to +1_05V_PCIE (Missing)
P.19:Delete R1919,C1585 and net:HDA_CODEC_BITCLK (Double components)
P.20:Delete R1934,R1954,R1955,R2424 and exchange net to TP569,TP570,TP571,TP572 (EC change)
P.24:Delete this Page (For customer require)
P.25:Swap RP52 Pin3,4 net
P.25:Move SW4 and GP2 to EC side,And change pull-up power from +ECVCC to +3VRUN
P.25:Add R2506,R2507 for SYSTEM_ID
P.26:Delete SPI ROM and SPI Debug port circuit (For customer require)
P.48:Change CN51 Pin33 from GND to DCBATOUT (For customer new panel spec infomation)

2006/12/28
P.3:Change R1757 from 4.7K to 47K (EC change)
P.25:Change R2210,R2212 Pin-1 net from CLK/DAT_SMB to CLK/DAT_SMB_EC2
P.25:Change Q109 from +ECVCC to +5VALW
P.39:Change PD29,PR2526 and PC1843 to dummy
P.48:Swap CN51 Pin36,38 net (For layout)

2006/12/29
P.8:Delete TP584 (Layout issue)
P.25:R2103,R2104,R2534,R2535 Dummy and R2210,R2212,R2533,R2536 Mount (For Clear Button Interface)
P.47:Delete EC26

2007/02/03
Del P.24 (Winbond EC) page and add History for EVT2
P.19:Change net name TP_GPIO34 to MB_FLASH_EN
P.20:Change net name MB_FLASH_EN to TP375
P.20 and P.48:Rename GPIO20 from AEC_PWRDN# to AEC_RESET#
P.20:Del TP596 and rename GPIO24 to AEC_PWRDN#
P.25:Add R2537,R2538 pull-down for EC strap
P.25:Del TP621
P.26:Change LED 2 type (Customer require)
P.39:Add PL17 and PL18 (Power issue)
P.39:Add PC1847,PC1848 and PC1849 (Power issue)
P.40:Change PR627 from 0R to 3.3R (Power issue)
P.40:Change PR601 from 604K to 300K (Power issue)
P.42:Change PR485 from 3.3K to 3.9K (Power issue)
P.43:Add PC1844,PC1845 and PC1846 (Power issue)
P.43:Change PR615.1(+5V_S3_SUS) to (+3V_S3_SUS)
P.45:Change PR526,PR611,PR499 and PR34 to NC
P.47:Del GP24 and add C1843,C1844 (For EMI issue)
P.47:Del GP25 and add C1845,C1846 (For EMI issue)
P.48:Rename RUN_PWRGD to AEC_PWRDN#

2007/02/07
P.42:Add TP634~TP637 for Power test use
P.47:Add EC53~EC68 for EMI require
P.47:Change EC17 and EC19 from DCBEADP+IN to DCBATOUT

2007/02/08
P:47:Change CN49 Pin7,8 from A_GND to GND (Customer require)

2007/02/09
P.28:Change CN4 type from HS8204E to HS8104E
P.29:Add PJ37-42 open jumper for EMI require
P.46:Change CN21 type from HS8208E to HS8108E
P.46:Change PAD3,4 type and add PAD6,7,9,10 for ME require
P.46:Change H3,H4,H6,H11 type and add H29 for ME require

2007/02/26
P.39:Change PC139,PC159,PC160,PC341,PC346,PC347 from NC to mount
P.39:Change PC147 from 330uF to 150uF
P.40:Change PR627 from 0R to 3.3R
P.40:Change PR601 from 604K to 300K
P.41:Change PC343,PC351,PC352 from NC to mount
P.42:Change PR485 from 3.3K to 3.9K
P.42:Change PC7,PC107,PC344,PC345,PC353,PC354,PC355,PC356 from NC to mount

2007/02/28
P.5:Change CAP25 P/N (substitute materiel)
P.11:Change D22,L58,L66,L75,L76,CAP26,CAP28,CAP31 P/N (substitute materiel)
P.12:Change CAP34,CAP36 P/N (substitute materiel)
P.19:Change D24 P/N (substitute materiel)
P.20:Change R2443 from 0R to 10K (Intel spec)
P.21:Change D25,D26,CAP38 P/N (substitute materiel)
P.29:Change L55,L56 P/N (substitute materiel)
P.33:Change CAP19,CAP20,CAP22 P/N (substitute materiel)
P.35:Change U67 P/N (substitute materiel)
P.38:Change PL11,PL14,PL15,PL16 P/N (substitute materiel)
P.39:Change PL17,PL18 P/N (substitute materiel)
P.40:Change PC23,PC589,PC574,PC576,PC577 P/N (substitute materiel)
P.41:Change PC144,PC148 P/N (substitute materiel)
P.43:Change PC1844,PC1845,PC1846 P/N (substitute materiel)
P.45:Change PC523,PC524 P/N (substitute materiel)
P.47:Change U75,L87,L88 P/N (substitute materiel)

2007/03/08
P.3:Change Q3 P/N (Buyer require)
P.6:Update U33 symbol from ICS9LPR358YGLFT to ICS9LPR358AGLFT
P.17:Change CN3 type for cost down
P.24:Change R2538 from 47K to 100K
P.27:Swap U27(G781),U68(G781-1) for S/W require
P.28:Change CN27,CN28 form normal type to reverse type (Customer require)
P.28:Change R2409 to NC and change R2410 to mount (Follow M6340)
P.28:Add TB94,TB95,TB96 (For BFT)
P.28:Mirror vertical L4,L5 (For layout require)
P.29:Change Q47 P/N (Buyer require)
P.32:Change CN43,CN44 form normal type to reverse type (Customer require)
P.33:Change U70,U71,U72 package (EUV spec require)
P.39:Dummy PL17,PL18 (Cost down)
P.43:Dummy PR454,PQ88

2007/03/13
P.6:Modify R2022.1 connection from AEC_CLK14 to R_CLK_ICH14
Page:All:Add Test point for BFT

2007/03/16
P.24:Change RP52 from 10K to 4.7K (To meet S/W spec)
P.24:Swap SMB-1 and SMB-2 signals
P.28:Change R152,R154,R136,R137,R482,R449,R105,R90 from NC to mount
P.28:Change L3,L4,L5,L9 from mount to NC
P.32:Chsange back CN44 symbol (ME turn 180drgee)
P.34:Del L92,L93 and change to R92,R93

2007/03/20
P.2:Update Block Diagram
P.24:Change R519,R521,R2445,R2446 from 10K to 4.7K (To meet S/W spec)

2007/03/22
P.39:Change PR192,PR198 from 0R to 3.3R (For EMI issue)
P.41:Change PR195 from 0R to 3.3R (For EMI issue)
P.42:Change PR456,PR466 from 0R to 3.3R (For EMI issue)
P.42:Add TB62.TB63 (Power request)
P.42:Change TT20,TT21,TT22,TT23,TT24,TT25,TT26 to
TB40,TB41,TB42,TB43,TB44,TB45,TB46 (Power request)
P.43:Add TB23,TB24,TB25,TB26,TB27,TB36,TB37 (Power request)
P.44:Change TP:TT45,TT46,TT57,TT16,TT17,TT18,TT19,TT44,TT43,TT42,TT32,TT41 to
TB38,TB39,TB65,TB66,TB67,TB68,TB69,TB81,TB83,TB47,TB49,TB50,TB48 (For BFT test)
P.46:Add EC43,EC69-74,EC78-82,EC84-86 for decrease noise
P.47:Change R2531,R2532,R2198,R2199 from 0R resister to 120R-100MHz bead (EMI
Request)
P.47:Change EC49,EC50,EC51,EC52 from NC to Mount(EMI Request)

2007/03/23
P.17:Change back CN3 connector type to EVT used
P.23:Add C674 (EMI Request)
P.41:Change PC166,PC170 from NC to mount (EMI Request)
P.42:Add bead PL19,PL20 (EMI Request)
P.46:Add cap C1747 (EMI Request)
P.46:Add cap EC6,EC7 (EMI Request)

2007/03/26
P.8:Add C1453 (For power test fail)
P.19;Change R1918 from NC_47R to 0R (EMI Request)
P.19:Change C1584 from NC to mount (EMI Request)
P.24:Currect SMBUS Defination
P.28:Change R2253 from NC_47R to 0R (EMI Request)
P.28:Change C1818 from NC to mount (EMI Request)
P.32:Change CN43 type (ME new tooling)
P.38:Move PF1 from right side to left side of PL11 and PL15
P:43:Change PR448,PR636,PQ88,PQ95 from NC to mount (For discharge too slow)
P.46:Add PAD11,PAD12,PAD13 (RF Request)
P.46:Change all TestPoint from 30mils to 40mils (For BFT test)
P.47:Change CN50 type (ME new tooling)

2007/03/27
P.11:Del L66,L67,L70,L73,C1517,C1518,C1520,C1527,R2419 (Intel Layout Guide V2.0)
P.11:Modify VCCA_TVA/B/C_DAC1/2 circuit (Intel Layout Guide V2.0)
P.19:Change BAT1 TestPoint type to 40mils
P.23:Change CN5 TestPoint type to 40mils
P.26:Change WOL function form S5 to S3 status
P.27:Change CN2 TestPoint type to 40mils
P.28:Change CN35 TestPoint type to 40mils
P.28:Change CN4 TestPoint type to 40mils
P.28:Update CN52 connector
P.28:Stuff R2253,C1818 (For EMI request)
P:35:Change CN45 TestPoint type to 40mils
P.38:Change PCN1 TestPoint type to 40mils
P.40:Add RUN_ON net and PR580 for power sequency
P.40:Change PR579 from stuff to NC (For can't boot from ext debug board issue)
P.47:Change CN18,CN19 TestPoint type to 40mils
P.48:Change CN26 TestPoint type to 40mils

2007/03/29
P.20:Change R2494 from 4.7K to 1K (Follow M6340)
P.20:Change R2440 from 4.7K to 1K (Follow M6340)
P:24:Add TestPoint for BFT test
P.24:Change C30,C33 from 10pF to 12pF (Vendor suggest)
P.37:Add TestPoint for BFT test

2007/03/30
P.21:Change L79 from 10uH choke to 330R bead (Follow intel schematic)

2007/03/31
P:40 Add PC600 for power leakage issue (Default is NC)
P.40 Add PD26 for power leakage issue (Default is NC)

2007/04/02
P.08:Add R1803 to isolate PM_THRMTRIP#_R side (Intel sighting report #30678)
P.19:Add R1910 for reserve disable ThermalTrip function
P.24:Add R415,R416,R417,R418 for FAN PWM layout path select
P.27:Add R411,R412,R413,R414 for FAN TACH layout path select
P.41:NC PC154 (Power reserved)

2007/04/03
P.42:Change PC472 type for cost and common parts
P.47:Add R2530,R2534 for ground path select (Customer request and
default is connect to A_GND)

2007/04/04
P.8:Change R1803 from NC to stuff
P.42:Change PC594,PC595 P/N from +/-10% to +/-5%

2007/04/18
P.26:Change LED2 color from Green to Yellow Green
P.39:Change PR78,PR82 from 68K to 82K (3/5V power limit up)
P.42:Dummy PC110,PC3 and mount PC21,PC88 (Power request)
P.43:Change PC1844,PC1845.PC1846 from 220uF/2.5V to 150uF/6.3V (Spec error)
P.47:Change CN50 type from high-speed to low-speed (Customer request)

FOXCONN	HON HAI PRECISION IND. CO., LTD. CPBG - R&D Division	
Title	History (DVT)	
Size C	Document Number M620-L	Rev 1.0
Date: Friday, June 08, 2007	Sheet 51 of 52	

2007/05/04
P.11:

FOXCONN	HON HAI PRECISION IND. CO., LTD. CPBG - R&D Division	
Title	***History (PVT)***	
Size C	Document Number **M620-L**	Rev 1.0
Date: Monday, June 25, 2007	Sheet 52 of 52	