1. ALL RESISTANCE VALUES ARE IN OHMS, 0.1 WATT +/- 5%.
2. ALL CAPACITANCE VALUES ARE IN MICROFARADS.
3. ALL CRYSTALS & OSCILLATOR VALUES ARE IN HERTZ.

M42B MLB NO_LDO SCHEMATIC

3/22/2007

REV	ZONE	ECN	DESCRIPTION OF CHANGE	CK APPD / DATE	ENG APPD / DATE
07		355269	ENGINEERING RELEASED	12/10/04	?

Page (.csa)		Contents	DRI	Sync	Date
1	1	Table of Contents	RX	N/A	N/A
2	2	SYSTEM BLOCK DIAGRAM	RX	MASTER	5/23/05
3	3	Power Block Diagram	MK	POWER	06/30/2005
4	4	CONFIGURATION OPTIONS	RX	SMC	07/18/2005
5	5	FUNC TEST 1 OF 2	RX	TP	07/25/2005
6	6	SIGNAL ALIAS /RESET	RX	ENET	08/19/2005
7	7	CPU 1 OF 2-FSB	RX	MASTER	05/03/2005
8	8	CPU 2 OF 2-PWR/GND	MK	MASTER	05/03/2005
9	9	CPU DECAPS & VID<>	MK	SMC	08/19/2005
10	10	CPU MISC1-TEMP SENSOR	ES	ENET	08/19/2005
11	11	CPU ITP700FLEX DEBUG	RX	MASTER	5/23/05
12	12	NB CPU Interface	MK	NB	07/25/2005
13	13	NB PEG / Video Interfaces	DK	NB	07/25/2005
14	14	NB Misc Interfaces	RX	NB	08/15/2005
15	15	NB DDR2 Interfaces	LT	NB	07/25/2005
16	16	NB Power 1	DK	NB	07/25/2005
17	17	NB Power 2	DK	NB	07/25/2005
18	18	NB Grounds	DK	NB	07/25/2005
19	19	NB (GM) Decoupling	DK	NB	06/22/2005
20	20	NB Config Straps	DK	NB	06/28/2005
21	21		RX	SB	08/05/2005
22	22		RX	ENET	11/16/2005
23	23		RX	ENET	11/28/2005
24	24		RX	SB	08/05/2005
25	25		RX	SB	06/28/2005
26	26	SB Misc	RX	NB	07/26/2005
27	27	M42 SMBUS CONNECTIONS	ES	ENET	08/30/2005
28	28	DDR2 SO-DIMM Connector A	LT	MEMORY	06/20/2005
29	29	DDR2 SO-DIMM Connector B	LT	MEMORY	06/20/2005
30	30	Memory Active Termination	LT	MEMORY	06/20/2005
31	31	Memory Vtt Supply	LT	(MASTER)	(MASTER)
32	33	CLOCKS	DK	CLOCK	06/03/2005
33	34	CLOCK TERMINATION	DK	CLOCK	06/06/2005
34	38	PATA CONNECTOR	ES	ENET	11/01/2005
35	39	SATA CONNECTOR	ES	ENET	11/14/2005
36	41	ETHERNET CONTROLLER	ES	ENET	12/06/2005
37	42	ETHERNET CONNECTOR	ES	ENET	11/14/2005
38	44	FIREWIRE CONTROLLER	ES	ENET	08/30/2005
39	45	FIREWIRE PORT	ES	ENET	11/16/2005
40	49	CONNECTOR MISC	ES	ENET	11/16/2005
41	51	IR CONTROLLER	ES	ENET	11/09/2005
42	52		ES	ENET	11/01/2005
43	53		ES	ENET	08/19/2005
44	54	BLUETOOTH INTERFACE	MK	ENET	08/29/2005
45	58	SMC	MK	SMC	08/18/2005
46	59	SMC SUPPORT	LD	SMC	08/23/2005
47	60	LPC+ Debug Connector	MK	NB	06/30/2005
48	61	CPU Current & Voltage Sense	ES	ENET	08/30/2005
49	62	TEMPERATURE SENSE	RX	ENET	11/09/2005
50	63	SPI BOOTROM	ES	MASTER	5/23/05
51	65	Fan	MK	ENET	11/10/2005
52	66	SMS	RX	SMC	08/23/2005
53	67	TPM	DK	SMC	07/18/2005
54	68	AUDIO: CODEC	DK	M42AUDIO	08/05/2006
55	72	AUDI0: SPEAKER AMP	DK	M42AUDIO	08/05/2006
56	73	AUDIO: JACK	DK	M42AUDIO	08/05/2006
57	74	AUDIO: JACK TRANSLATORS	MK	M42AUDIO	08/05/2006
58	75	IMVP6 CPU VCore Regulator	MK	POWER	07/13/2005
59	76	5V / 3.3V Power Supply	MK	POWER	07/13/2005
60	77	2.5V/1.2V Regulator	MK	ENET	12/06/2005
61	78	1.8V Supply	MK	POWER	07/13/2005
62	79	1.5V / 1.05V Power Supply	MK	POWER	07/13/2005
63	80	S3/S0 FETS, G3H SUPPLY	MK	ENET	08/30/2005
64	81	Power Conn / Alias	MK	ENET	11/16/2005
65	82	DC-In & Battery Connectors	MK	POWER	07/13/2005
66	83	PBUS Supply/Battery Charger	ES	SMC	08/19/2005
67	94	INVERTER,LVDS,TMDS	DK	GRAPHIC	06/06/2005
68	95	EXTERNAL TMDS	DK	GRAPHIC	06/06/2005
69	98	MINI-DVI CONNECTOR		EUGENE	05/21/05
70	99	Cross Reference Page			
71	100	Cross Reference Page			
72	101	Cross Reference Page			
73	102	Cross Reference Page			
74	103	Cross Reference Page			
75	104	Cross Reference Page			
76	105	Cross Reference Page			
77	106	Cross Reference Page			
78	107	Cross Reference Page			
79	108	Cross Reference Page			

EE DRIS:

RX-RAYMOND XU
DK-DINESH KUMAR
RC-RAY CHANG
MK-MARC KLINGELHOFER
LT-LAWRENCE TAN
LD-LINDA DUNN

Schematic / PCB #'s

PART#	QTY	DESCRIPTION	REFERENCE DESIGNATOR(S)	BOM OPTION
051-7374	1	SCHEM,M42B,MLB NO_LDO	SCH	
820-1889	1	PCBF,M42,MLB NO_LDO	PCB	

DIMENSIONS ARE IN MILLIMETERS
XX ±
X.XX ±
X.XXX ±
ANGLES ±
DO NOT SCALE DRAWING

THIRD ANGLE PROJECTION

METRIC

DRAFTER		DESIGN CK	
ENG APPD		MFG APPD	
QA APPD		DESIGNER	
RELEASE		SCALE NONE	

MATERIAL/FINISH NOTED AS APPLICABLE

SIZE D

Apple Computer Inc.

NOTICE OF PROPRIETARY PROPERTY

THE INFORMATION CONTAINED HEREIN IS THE PROPRIETARY PROPERTY OF APPLE COMPUTER, INC. THE POSSESSOR AGREES TO THE FOLLOWING

I TO MAINTAIN THE DOCUMENT IN CONFIDENCE
II NOT TO REPRODUCE OR COPY IT
III NOT TO REVEAL OR PUBLISH IN WHOLE OR PART

TITLE
SCHEM,MLB NO_LDO,M42B

DRAWING NUMBER 051-7374 REV. A

SHT 1 OF 79

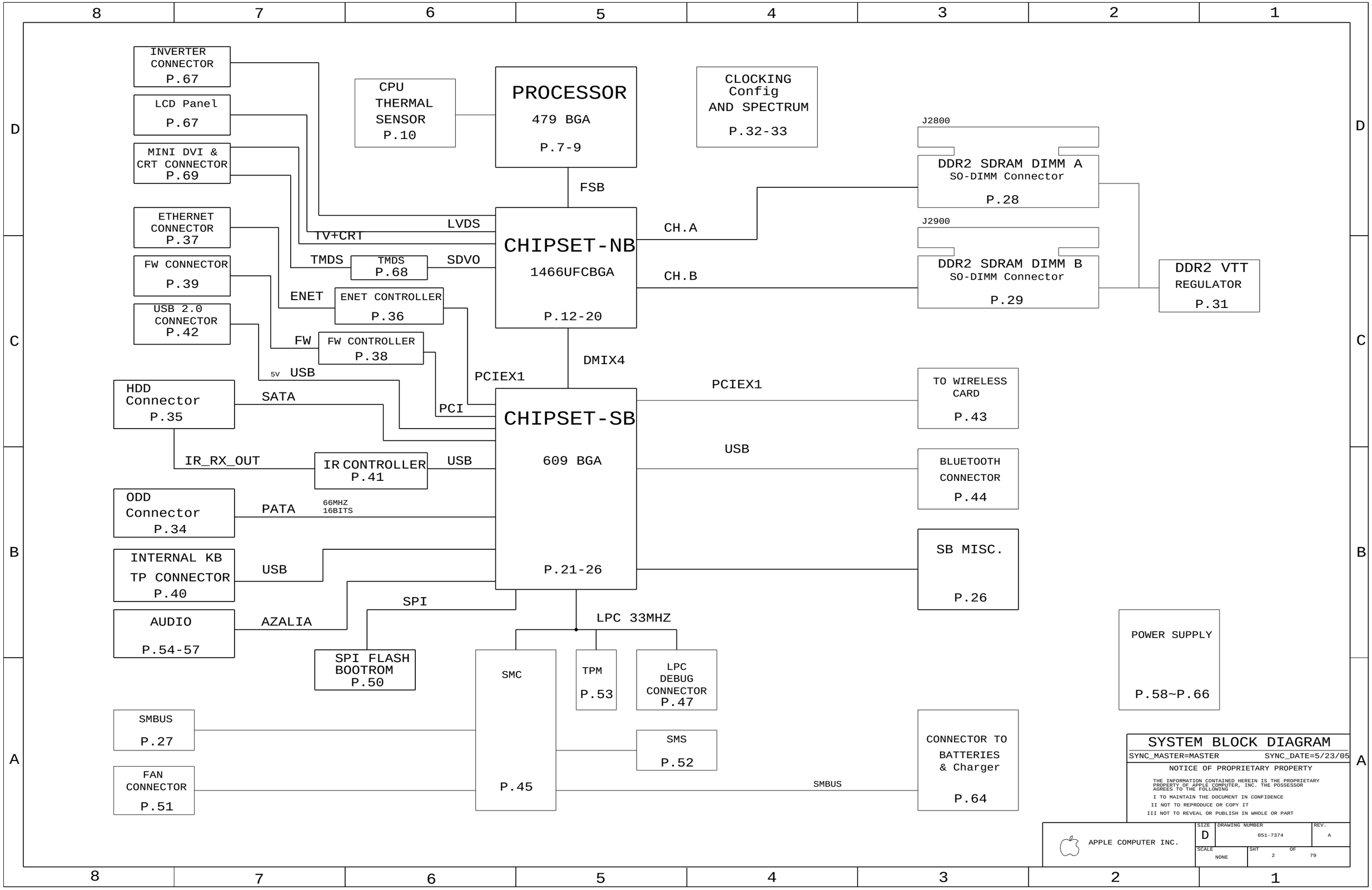
INVERTER CONNECTOR P.67
LCD Panel P.67
MINI DVI & CRT CONNECTOR P.69
ETHERNET CONNECTOR P.37
FW CONNECTOR P.39
USB 2.0 CONNECTOR P.42
HDD Connector P.35
ODD Connector P.34
INTERNAL KB TP CONNECTOR P.40
AUDIO P.54-57
SMBUS P.27
FAN CONNECTOR P.51
CPU THERMAL SENSOR P.10
PROCESSOR 479 BGA P.7-9
CLOCKING Config AND SPECTRUM P.32-33
FSB
LVDS
TV+CRT
TMDS
TMDS P.68
SDVO
CHIPSET-NB 1466UFCBGA P.12-20
CH.A
CH.B
J2800
DDR2 SDRAM DIMM A SO-DIMM Connector P.28
J2900
DDR2 SDRAM DIMM B SO-DIMM Connector P.29
DDR2 VTT REGULATOR P.31
ENET
ENET CONTROLLER P.36
FW
FW CONTROLLER P.38
5V USB
PCIEX1
PCI
DMIX4
SATA
IR_RX_OUT
IR CONTROLLER P.41
USB
PATA
66MHZ 16BITS
CHIPSET-SB 609 BGA P.21-26
PCIEX1
TO WIRELESS CARD P.43
USB
BLUETOOTH CONNECTOR P.44
SB MISC. P.26
SPI
SPI FLASH BOOTROM P.50
AZALIA
LPC 33MHZ
SMC P.45
TPM P.53
LPC DEBUG CONNECTOR P.47
SMS P.52
SMBUS
CONNECTOR TO BATTERIES & Charger P.64
POWER SUPPLY P.58~P.66
SYSTEM BLOCK DIAGRAM
SYNC_MASTER=MASTER
SYNC_DATE=5/23/05
NOTICE OF PROPRIETARY PROPERTY
THE INFORMATION CONTAINED HEREIN IS THE PROPRIETARY PROPERTY OF APPLE COMPUTER, INC. THE POSSESSOR AGREES TO THE FOLLOWING
I TO MAINTAIN THE DOCUMENT IN CONFIDENCE
II NOT TO REPRODUCE OR COPY IT
III NOT TO REVEAL OR PUBLISH IN WHOLE OR PART
APPLE COMPUTER INC.
SIZE D
DRAWING NUMBER 051-7374
REV. A
SCALE NONE
SHT 2 OF 79

M42A POWER SYSTEM ARCHITECTURE

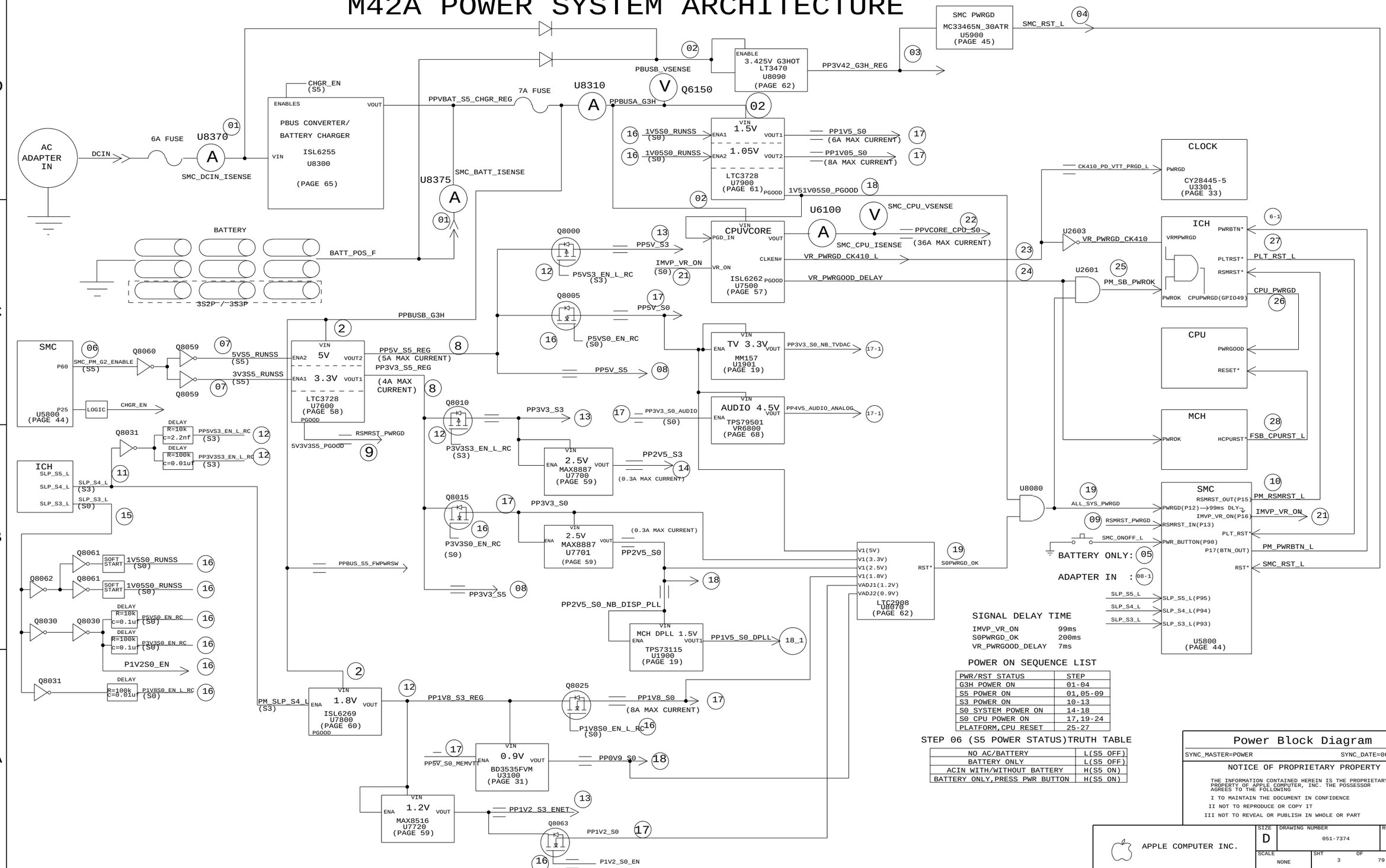

SIGNAL DELAY TIME

IMVP_VR_ON	99ms
S0PWRGD_OK	200ms
VR_PWRGOOD_DELAY	7ms

POWER ON SEQUENCE LIST

PWR/RST STATUS	STEP
G3H POWER ON	01-04
S5 POWER ON	01,05-09
S3 POWER ON	10-13
S0 SYSTEM POWER ON	14-18
S0 CPU POWER ON	17,19-24
PLATFORM,CPU RESET	25-27

STEP 06 (S5 POWER STATUS)TRUTH TABLE

NO AC/BATTERY	L(S5 OFF)
BATTERY ONLY	L(S5 OFF)
ACIN WITH/WITHOUT BATTERY	H(S5 ON)
BATTERY ONLY,PRESS PWR BUTTON	H(S5 ON)

Power Block Diagram

SYNC_MASTER=POWER SYNC_DATE=06/30/2005

NOTICE OF PROPRIETARY PROPERTY

THE INFORMATION CONTAINED HEREIN IS THE PROPRIETARY PROPERTY OF APPLE COMPUTER, INC. THE POSSESSOR AGREES TO THE FOLLOWING

I TO MAINTAIN THE DOCUMENT IN CONFIDENCE

II NOT TO REPRODUCE OR COPY IT

III NOT TO REVEAL OR PUBLISH IN WHOLE OR PART

APPLE COMPUTER INC.

SIZE	DRAWING NUMBER	REV.
D	051-7374	A
SCALE NONE	SHT 3 OF 79	

Page Notes

Power aliases required by this page:
(NONE)

Signal aliases required by this page:
(NONE)

BOM options provided by this page:
(NONE)

BOM OPTION

BOMOPTION	M42A GOOD ST MICRO 630-7795 EVT	M42A BETTER ST MICRO 630-7796 EVT	M42A BEST KIONIX 630-7799 EVT	M42A GOOD KIONIX 630-7798 EVT	M42A BETTER KIONIX 630-7736 EVT	M42A BEST ST MICRO 630-7797 EVT
1V51V05S0_CONT						
1V51V05S0_SKIP	V	V	V	V	V	V
5V3V3S3_CONT						
5V3V3S3_SKIP	V	V	V	V	V	V
ACCEL_KIONIX			V	V	V	
ACCEL_ST	V	V				V
INVERTER_BUF	V	V	V	V	V	V
INVERTER_UNBUF						
ITP						
LEMENU	V	V	V	V	V	V
MEMVTT_EN_PU	V	V	V	V	V	V
NBCFG_DMI_REVERSE						
NBCFG_DMI_X2						
NBCFG_DYN_ODT_DISABLE						
NBCFG_PEG_REVERSE						
NBCFG_SDVO_AND_PCIE						
NBCFG_VCC_1V5						
NO_REBOOT_MODE						
USB_C_OC_PU	V	V	V	V	V	V
USB_D_OC_PU	V	V	V	V	V	V
USB_E_OC_PU	V	V	V	V	V	V
GOOD	V			V		
BETTER		V			V	
BEST			V			V
M42A_PGM	V	V	V	V	V	V
ONEWIRE_PULLUP	V	V	V	V	V	V
ONEWIRE_PULLUP_OLD						
ONEWIRE_PU_PROT	V	V	V	V	V	V
ONEWIRE_PU_ACOK						
ONEWIRE_PWRCTL	V	V	V	V	V	V
ONEWIRE_ALWAYSON						
3V3_IND_2MM8	V	V	V	V	V	V
3V3_IND_3MM						
NORMAL	V	V		V	V	
FANCY			V			V
STANDOFF	V	V	V	V	V	V
FET_FDN6296	V	V	V	V	V	V
FET_STL8NH3LL						
GOOD-ST	V					
BETTER-ST		V				
BEST-KIONIX			V			
GOOD-KIONIX				V		
BETTER-KIONIX					V	
BEST-ST						V
TPM						
PVT-DIMM						
POST-RAMP-DIMM35	V	V	V	V	V	V
M42						
M42A	V	V	V	V	V	V

BOARD STACK-UP AND CONSTRUCTION

Top		SIGNAL
2		GROUND
3		SIGNAL(High Speed)
4		SIGNAL(High Speed)
5		GROUND
6		POWER
7		POWER
8		GROUND
9		SIGNAL(High Speed)
10		SIGNAL(High Speed)
11		GROUND
BOTTOM		SIGNAL

MLB STACKUP

LAYER	THICKNESS (MM)	TRACE WIDTH (MM)
CONFORMAL_COAT	0.018	
L1 SIGNAL(TOP)	0.047	0.1
L1-L2	0.07	
L2 GROUND	0.014	---
L2-L3	0.076	
L3 SIGNAL	0.014	0.079
L3-L4	0.156	
L4 SIGNAL	0.014	0.079
L4-L5	0.076	
L5 GND	0.014	---
L5-L6	0.07	
L6 POWER	0.031	---
L6-L7	0.076	
L7 POWER	0.031	---
L7-L8	0.07	
L8 GROUND	0.014	---
L8-L9	0.076	
L9 SIGNAL	0.014	0.1
L9-L10	0.156	
L10 SIGNAL	0.014	0.1
L10-L11	0.076	
L11 GROUND	0.014	0.1
L11-L12	0.07	
L12 SIGNAL(BOTTOM)	0.047	0.1
CONFORMAL_COAT	0.018	
TOTAL	1.276	---

PART#	QTY	DESCRIPTION	REFERENCE DESIGNATOR(S)	BOM OPTION
337S3450	1	IC,MEROM,CPU L2 1.83GHZ,479 PGA	U0700	GOOD
337S3389	1	IC,MEROM,CPU 2.0GHZ,479 PGA	U0700	BETTER
337S3391	1	IC,MEROM,CPU 2.16GHZ,479 PGA	U0700	BEST

PART#	QTY	DESCRIPTION	REFERENCE DESIGNATOR(S)	BOM OPTION
338S0268	1	IC,FW32306,1394A LINK,BGA,129P	U4400	LEMENU
338S0270	1	IC,88E8053,GIGABIT ENET XCVR,64P QFN,NO	U4101	LEMENU
359S0109	1	IC,SLG8LP436,CLOCK GEN,68PIN QFN	U3301	LEMENU

PART#	QTY	DESCRIPTION	REFERENCE DESIGNATOR(S)	BOM OPTION
341S2131	1	IC, 16MBIT 8-PIN SPI SERIAL FLASH,SOIC8	U6301	M42A_PGM
341S1797	1	IC,EEPROM,SERIAL IIC,8KBIT,SO8	U4102	M42A_PGM
341S2133	1	IC,SMC,176P BGA,HS8/2116	U5800	M42A_PGM
341S1890	1	IC,PSOC+W/USB,56P,MLF,CY8C24794	U5100	M42A_PGM

341S2132 FOR M42B LOCKED BOOTROM

PART#	QTY	DESCRIPTION	REFERENCE DESIGNATOR(S)	CRITICAL	BOM OPTION
826-4393	1	LBL,P/N LABEL,PCB,28MMX6MM	EEE:YCT	CRITICAL	BEST-KIONIX
826-4393	1	LBL,P/N LABEL,PCB,28MMX6MM	EEE:YCS	CRITICAL	BETTER-KIONIX
826-4393	1	LBL,P/N LABEL,PCB,28MMX6MM	EEE:YCR	CRITICAL	GOOD-KIONIX

CONFIGURATION OPTIONS

SYNC_MASTER=SMC SYNC_DATE=07/18/2005

NOTICE OF PROPRIETARY PROPERTY

THE INFORMATION CONTAINED HEREIN IS THE PROPRIETARY PROPERTY OF APPLE COMPUTER, INC. THE POSSESSOR AGREES TO THE FOLLOWING

I TO MAINTAIN THE DOCUMENT IN CONFIDENCE

II NOT TO REPRODUCE OR COPY IT

III NOT TO REVEAL OR PUBLISH IN WHOLE OR PART

APPLE COMPUTER INC.

SIZE	DRAWING NUMBER	REV.
D	051-7374	A
SCALE NONE	SHT 4 OF 79	

Functional Test Points

Power Supply NO_TESTs

NO_TEST

I93		IMVP6_RBIAS	58A4 58B7
I94		IMVP6_COMP	58A4 58B7
I95		5VS5_RUNSS	59B4 63C7
I96		1V5S0_RUNSS	62B5 63B7
I101		1V8S3_COMP	61B6
I102		1V8S3_FSET	61C6
I103	TRUE	3V3S5_COMP	
I104	TRUE	3V3S5_FSET	
I106	TRUE	1V05S0_COMP	
I105	TRUE	1V05S0_FSET	
I107	TRUE	P3V42G3H_FB	63D2

CLOCK NO_TESTS

NO_TEST

I111	TRUE	CK410_CPU0_N	32C4 33D5
I112	TRUE	CK410_CPU0_P	32C4 33D5
I113	TRUE	CK410_CPU1_N	32C4 33D5
I114	TRUE	CK410_CPU1_P	32C4 33D5
I115	TRUE	CK410_CPU2_ITP_SRC10_N	32C4 33D5
I116	TRUE	CK410_CPU2_ITP_SRC10_P	32C4 33D5
I117	TRUE	CK410_DOT96_27M_N	32A4 33B5
I118	TRUE	CK410_DOT96_27M_P	32A4 33B5
I119	TRUE	CK410_LVDS_N	32B4 33A5
I120	TRUE	CK410_LVDS_P	32B4 33A5
I121	TRUE	CK410_PCI4_CLK_SPN	
I122	TRUE	CK410_PCIF1_CLK	32B6 33D8
I123	TRUE	CK410_SRC1_N_SPN	6B3
I124	TRUE	CK410_SRC1_P_SPN	6B3
I125	TRUE	CK410_SRC2_N	32B4 33C5
I126	TRUE	CK410_SRC2_P	32B4 33C5
I183	TRUE	CK410_SRC3_N_SPN	6B3
I184	TRUE	CK410_SRC3_P_SPN	6B3
I185	TRUE	CK410_SRC4_N	32B4 33B5
I186	TRUE	CK410_SRC4_P	32B4 33B5
I187	TRUE	CK410_SRC5_N	32B4 33C5
I188	TRUE	CK410_SRC5_P	32B4 33C5
I189	TRUE	CK410_SRC6_N	32B4 33C5
I190	TRUE	CK410_SRC6_P	32B4 33D5
I191	TRUE	CK410_SRC7_N_SPN	6B3
I192	TRUE	CK410_SRC7_P_SPN	6B3
I193	TRUE	CK410_SRC8_N	32A4 33C5
I194	TRUE	CK410_SRC8_P	32A4 33C5
I195	TRUE	CK410_SRC_CLKREQ1_L_SPN	6B3
I197	TRUE	CK410_SRC_CLKREQ3_L_SPN	6B3
I198	TRUE	CK410_SRC_CLKREQ8_L	32A4 33A5

FIREWARE NO_TESTS

NO_TEST

I199	TRUE	FW_B_TPA_N_SPN	6D1
I200	TRUE	FW_B_TPA_P_SPN	6D1
I201	TRUE	FW_B_TPBIAS_SPN	6D1
I202	TRUE	FW_B_TPB_N_SPN	6D1
I203	TRUE	FW_B_TPB_P_SPN	6D1
I204	TRUE	FW_C_TPA_N_SPN	6D1
I205	TRUE	FW_C_TPA_P_SPN	6D1
I206	TRUE	FW_C_TPBIAS_SPN	6D1
I207	TRUE	FW_C_TPB_N_SPN	6D1
I208	TRUE	FW_C_TPB_P_SPN	6D1

LVDS NO_TESTS

NO_TEST

I209	TRUE	LVDS_B_CLK_N_SPN	6D5
I210	TRUE	LVDS_B_CLK_P_SPN	6D5
I211	TRUE	LVDS_B_DATA_N0_SPN	6D5
I212	TRUE	LVDS_B_DATA_N1_SPN	6D5
I213	TRUE	LVDS_B_DATA_N2_SPN	6D5
I214	TRUE	LVDS_B_DATA_P1_SPN	6D5
I215	TRUE	LVDS_B_DATA_P2_SPN	6D5

ETHERNET NO_TESTS

NO_TEST

I216	TRUE	ENET_MDI_TRAN_P<2>	37B5
I217	TRUE	ENET_MDI_TRAN_N<2>	37B5
I218	TRUE	ENET_MDI_TRAN_P<3>	37B5

NO_TEST

I219	TRUE	SMC_FAN_3_TACH	45B8 46C3
I220	TRUE	ALS_LEFT	45A8 46C3

Fan Connectors

FUNC_TEST

I12	TRUE	=PP5V_S0_FAN_RT	51C4 64D3
I15	TRUE	FAN_RT_PWM	51B3
I16	TRUE	FAN_RT_TACH	51C3
I13	TRUE	=PP3V3_S0_FAN_RT	51C4 64A6
I14	TRUE	SMC_FAN_1_CTL	45B8 51B4
I10	TRUE	SMC_FAN_1_TACH	45B8 51C4

LPC+ Debug Connector

FUNC_TEST

I20	TRUE	=PP3V42_G3H_LPCPLUS	47C6 64D1
I19	TRUE	=PP5V_S0_LPCPLUS	47C6 64D3
I18	TRUE	LPC_AD<0>	21D4 45D8 47C6 53C6
I17	TRUE	LPC_AD<1>	21D4 45D8 47C6 53C6
I71	TRUE	LPC_FRAME_L	21C5 45C8 47C6 53C6
I72	TRUE	PM_CLKRUN_L	23C8 38A5 45D5 47C6 53C6
I73	TRUE	BOOT_LPC_SPI_L	22B3 45C8 47C6
I74	TRUE	SMC_TMS	45B5 46C6 47C6
I75	TRUE	DEBUG_RST_L	26B1 47C6
I76	TRUE	SMC_TRST_L	45C1 47C6
I77	TRUE	SMC_TDO	45C5 46C6 47B6
I78	TRUE	SMC_MD1	45C2 47B6
I79	TRUE	SMC_TX_L	45C8 46B2 46D6 47B6
I80	TRUE	FWH_INIT_L	68Z 21C4 47C5
I81	TRUE	PCI_CLK_PORT80_LPC	33D6 47C5
I82	TRUE	LPC_AD<2>	21D4 45D8 47C5 53C6
I83	TRUE	LPC_AD<3>	21D4 45D8 47C5 53C6
I84	TRUE	INT_SERIRQ	23C8 45C8 47C5 53C6
I85	TRUE	PM_SUS_STAT_L	23C5 45D5 46D3 47C5 53C6
I86	TRUE	SMC_TDI	45C5 46C6 47C5
I87	TRUE	SMC_TCK	45C5 46C6 47C5
I88	TRUE	SMC_RST_L	45C3 46D7 47C5
I89	TRUE	SMC_NMI	45C1 47B5
I91	TRUE	SMC_RX_L	45C8 46B2 46D6 47B5
I68	TRUE	SV_SET_UP	23B6 23C3 47B5

Other Func Test Points

FUNC_TEST

I62	TRUE	=PP1V05_S0_REG	62B1 64D8

SMBus FUNC_TEST

I182

	TRUE	SMBUS_SMC_MLB_SCL	27C5
I183	TRUE	SMBUS_SMC_MLB_SDA	27B5

FIREWIRE FUNC_TEST

I192	TRUE	PPFW_SWITCH	39D4

SLEEP LED FUNC_TEST

I155	TRUE	SYS_LED_ANODE	35C5 46A3

SMC FUNC_TEST

I165	TRUE	SMC_LID	40C4 45B5 46C6 65A8
I164	TRUE	SMC_MANUAL_RST_L	46D8
I166	TRUE	SMC_CPU_VSENSE	45D5 48B1

Power Supply FUNC_TEST

I160	TRUE	ALL_SYS_PWRGD	26A5 45D8 63B1
I161	TRUE	PPVCORE_CPU_S0	64D7
I162	TRUE	PP1V05_S0	64D7
I163	TRUE	PP1V5_S0	64C7
I152	TRUE	PP1V8_S0	64C7
I153	TRUE	PP2V5_S0	64B7
I150	TRUE	PP3V3_S0	64B7
I151	TRUE	PP5V_S0	64D4
I167	TRUE	PP1V2_S3	64C4
I168	TRUE	PP1V8_S3	64C4
I170	TRUE	PP2V5_S3	64C4
I172	TRUE	PP3V3_S3	64B4
I171	TRUE	PP5V_S3	64B4
I177	TRUE	PP3V3_S5	64A4
I178	TRUE	PP5V_S5	64A4
I179	TRUE	PP3V42_G3H	64D1
I170	TRUE	PPBUSA_G3H	
I170	TRUE	PPBUSB_G3H	64C1
I176	TRUE	PP18V5_G3H	64C1
I181	TRUE	PP0V9_S0	64D7

Battery Digital Connector

FUNC_TEST

I1	TRUE	SMC_BS_ALRT_L	45C5 46C6 65A2
I3	TRUE	SMBUS_BATT_SCL_F	65B6
I4	TRUE	SMBUS_BATT_SDA_F	65A6
I2	TRUE	BATT_IN	
I177	TRUE	BATT_POS	65A6
I180	TRUE	BATT_NEG	65A6

Audio FUNC_TEST

I9	TRUE	PP5V_S0_AUDIO_PWR	
I11	TRUE	PP5V_S0_AUDIO	
I10	TRUE	GND_AUDIO_PWR	64B2
I21	TRUE	GND_AUDIO_CODEC	64B2
I22	TRUE	ACZ_SDATAIN<0>	21C7 54D7
I24	TRUE	ACZ_SDATAOUT	21C7 54D7
I23	TRUE	ACZ_BITCLK	21C7 54D7
I25	TRUE	ACZ_RST_L	21C7 54C7 57C3
I45	TRUE	ACZ_SYNC	21C7 54D7

Battery FUNC_TEST

I29	TRUE	SMC_BATT_ISET	45B5 66B7
I32	TRUE	SMC_BATT_CHG_EN	45D8 46B6 66A4
I31	TRUE	SMC_BC_ACOK	45C5 46B6 65C3 65C7 66A6
I33	TRUE	SMC_PS_ON	39C6 45D5 46B3 65C3
I36	TRUE	SMC_BATT_TRICKLE_EN_L	45D8 46B6 66A3
I38	TRUE	SYS_ONEWIRE	45B8 46D6 65C8

USB FUNC_TEST

I44	TRUE	TP_USBP_E	6C2
I47	TRUE	TP_USBN_E	6C2
I46	TRUE	TP_USBP_F	
I48	TRUE	TP_USBN_F	

DC-JACK FUNC_TEST

I67	TRUE	ACIN_ENABLE_GATE	65C3

Battery charger FUNC_TEST

I58	TRUE	PPVBAT_G3H_CHGR_OUT	66B5 66C2

INVERTER CONNECTOR FUNC_TEST

I60	TRUE	PPBUS_ALL_INV_CONN	67D3
I59	TRUE	INV_GND	67D2
I61	TRUE	PP5V_INV_F	67D3
I63	TRUE	INV_BKLIGHT_PWM_L	67D2

FUNC TEST 1 OF 2

NOTICE OF PROPRIETARY PROPERTY

THE INFORMATION CONTAINED HEREIN IS THE PROPRIETARY PROPERTY OF APPLE COMPUTER, INC. THE POSSESSOR AGREES TO THE FOLLOWING

I TO MAINTAIN THE DOCUMENT IN CONFIDENCE

II NOT TO REPRODUCE OR COPY IT

III NOT TO REVEAL OR PUBLISH IN WHOLE OR PART

APPLE COMPUTER INC.

SIZE	DRAWING NUMBER	REV.
D	051-7374	A
SCALE NONE	SHT 5 OF 79	

(EMI PAD FOR INVERTER GONNECTOR)

67C2 INVT_CHGND — 1 ZS0620 EMI-SPRING CLIP-SM-M42

SPKR-MIC-CLIP-M42
NC — 1 ZS0621 SM

CHASSIS GND

BATTERY,AUDIO,DIP DIMM CONNECTOR CHASSIS GND

GND_CHASSIS_IO 6C7 — OMIT Z0606 5R2P3-7SQB

65A6 =GND_BATT_CHGND
56B8 =GND_CHASSIS_AUDIO_JACK
=GND_CHASSIS_AUDIO_SPKRCONN
57A6 =GND_CHASSIS_AUDIO_MIC
=GND_CHASSIS_AUDIO_SHIELD1
=GND_CHASSIS_AUDIO_SHIELD2
=GND_CHASSIS_AUDIO_SHIELD3
28A5 =GND_CHASSIS_DIPDIMM_LEFT

SATA,LVDS CONNECTOR CHASSIS GND

GND_CHASSIS_SATA 35C8 — OMIT Z0607 6P5R2P6-5P5B
VOLTAGE=0V
MAKE_BASE=TRUE

67B2 67A2 =GND_CHASSIS_LVDS

C0607 0.1UF 10% 16V X5R 402
C0608 0.01UF 10% 16V CERM 402

DCIN CONNECTOR CHASSIS GND

GND_CHASSIS_DCIN — OMIT Z0602 5R2P3-7SQB
VOLTAGE=0V
MAKE_BASE=TRUE

65C8 =GND_DCIN_CHGND
37A4 =GND_CHASSIS_RJ45
69C3 69A4 =GND_CHASSIS_TMDS_UPPER

C0630 0.1UF 10% 16V X5R 402

I/O CONNECTOR CHASSIS GND

GND_CHASSIS_IO 6D7 — OMIT Z0608 5P0R2P3-7BLB
VOLTAGE=0V
MAKE_BASE=TRUE

39A1 =GND_CHASSIS_FW_DOWN
42C4 42C2 42A4 42A2 =GND_CHASSIS_USB

C0610 0.1UF 10% 16V X5R 402
C0611 0.01UF 10% 16V CERM 402

DIP DIMM CONNECTOR CHASSIS GND

GND_CHASSIS_CENTER — OMIT Z0610 5R2P3-7SQB
VOLTAGE=0V
MAKE_BASE=TRUE

29A5 28D5 =GND_CHASSIS_DIPDIMM_CENTER

C0616 0.1UF 10% 16V X5R 402
C0617 0.01UF 10% 16V CERM 402

DIP DIMM CONNECTOR CHASSIS GND

GND_CHASSIS_RIGHT — OMIT Z0609 5R2P3-7SQB
VOLTAGE=0V
MAKE_BASE=TRUE

29D4 =GND_CHASSIS_DIPDIMM_RIGHT

C0614 0.1UF 10% 16V X5R 402
C0615 0.01UF 10% 16V CERM 402

OMIT Z0601 5R2P3-7SQB
GND_CHASSIS_CPU

C0612 0.1UF 10% 16V X5R 402
C0613 0.01UF 10% 16V CERM 402

OMIT Z0611 5R2P3-7B
GND_CHASSIS_FANSCREW

C0618 0.1UF 10% 16V X5R 402
C0619 0.01UF 10% 16V CERM 402

DIGITAL GND SCREW HOLE

OMIT Z0603 STDOFF-4.5OD3.95H-1.1-3.7-TH1
NB_RIGHT_DOWN_SCREW

R0612 0 5% 1/16W MF-LF 402

OMIT Z0604 STDOFF-4.5OD3.95H-1.1-3.7-TH1
CPU_THERMAL_SCREW_UP

R0610 0 5% 1/16W MF-LF 402

OMIT Z0605 STDOFF-4.5OD3.95H-1.1-3.7-TH1
CPU_THERMAL_SCREW_DOWN

R0611 0 5% 1/16W MF-LF 402

OMIT Z0621 STDOFF-4.5OD3.95H-1.1-3.7-TH1
CPU_THERMAL_SCREW_RIGHT

R0621 0 5% 1/16W MF-LF 402

LVDS ALIASES

NO-CONNECT UNUSED LVDS INTERFACE PORTS

13C5	LVDS_B_CLK_N	LVDS_B_CLK_N_SPN	5A7
13C5	LVDS_B_CLK_P	LVDS_B_CLK_P_SPN	5A7
13C5	LVDS_B_DATA_N<0>	LVDS_B_DATA_N0_SPN	5A7
13C5	LVDS_B_DATA_N<1>	LVDS_B_DATA_N1_SPN	5A7
13C5	LVDS_B_DATA_N<2>	LVDS_B_DATA_N2_SPN	5A7
13C5	LVDS_B_DATA_P<0>	LVDS_B_DATA_P0_SPN	5A7
13C5	LVDS_B_DATA_P<1>	LVDS_B_DATA_P1_SPN	5A7
13C5	LVDS_B_DATA_P<2>	LVDS_B_DATA_P2_SPN	5A7

MAKE_BASE=TRUE

PCI_EXPRESS GRAPHICS ALIASES

NO-CONNECT UNUSED SDVO INTERFACE PORTS

13D3	PEG_D2R_N<0>	PEG_D2R_N0_SPN
13D3	PEG_D2R_N<2>	PEG_D2R_N2_SPN
13D3	PEG_D2R_N<3>	PEG_D2R_N3_SPN
13D3	PEG_D2R_N<4>	PEG_D2R_N4_SPN
13D3	PEG_D2R_N<5>	PEG_D2R_N5_SPN
13D3	PEG_D2R_N<6>	PEG_D2R_N6_SPN
13D3	PEG_D2R_N<7>	PEG_D2R_N7_SPN
13D3	PEG_D2R_N<8>	PEG_D2R_N8_SPN
13D3	PEG_D2R_N<9>	PEG_D2R_N9_SPN
13C3	PEG_D2R_N<10>	PEG_D2R_N10_SPN
13C3	PEG_D2R_N<11>	PEG_D2R_N11_SPN
13C3	PEG_D2R_N<12>	PEG_D2R_N12_SPN
13C3	PEG_D2R_N<13>	PEG_D2R_N13_SPN
13C3	PEG_D2R_N<14>	PEG_D2R_N14_SPN
13C3	PEG_D2R_N<15>	PEG_D2R_N15_SPN
13C3	PEG_D2R_P<0>	PEG_D2R_P0_SPN
13C3	PEG_D2R_P<2>	PEG_D2R_P2_SPN
13C3	PEG_D2R_P<3>	PEG_D2R_P3_SPN
13C3	PEG_D2R_P<4>	PEG_D2R_P4_SPN
13C3	PEG_D2R_P<5>	PEG_D2R_P5_SPN
13C3	PEG_D2R_P<6>	PEG_D2R_P6_SPN
13C3	PEG_D2R_P<7>	PEG_D2R_P7_SPN
13C3	PEG_D2R_P<8>	PEG_D2R_P8_SPN
13C3	PEG_D2R_P<9>	PEG_D2R_P9_SPN
13C3	PEG_D2R_P<10>	PEG_D2R_P10_SPN
13C3	PEG_D2R_P<11>	PEG_D2R_P11_SPN
13C3	PEG_D2R_P<12>	PEG_D2R_P12_SPN
13C3	PEG_D2R_P<13>	PEG_D2R_P13_SPN
13C3	PEG_D2R_P<14>	PEG_D2R_P14_SPN
13C3	PEG_D2R_P<15>	PEG_D2R_P15_SPN
13B3	PEG_R2D_C_N<4>	PEG_R2D_C_N4_SPN
13B3	PEG_R2D_C_N<5>	PEG_R2D_C_N5_SPN
13B3	PEG_R2D_C_N<6>	PEG_R2D_C_N6_SPN
13B3	PEG_R2D_C_N<7>	PEG_R2D_C_N7_SPN
13B3	PEG_R2D_C_N<8>	PEG_R2D_C_N8_SPN
13B3	PEG_R2D_C_N<9>	PEG_R2D_C_N9_SPN
13B3	PEG_R2D_C_N<10>	PEG_R2D_C_N10_SPN
13B3	PEG_R2D_C_N<11>	PEG_R2D_C_N11_SPN
13B3	PEG_R2D_C_N<12>	PEG_R2D_C_N12_SPN
13B3	PEG_R2D_C_N<13>	PEG_R2D_C_N13_SPN
13B3	PEG_R2D_C_N<14>	PEG_R2D_C_N14_SPN
13B3	PEG_R2D_C_N<15>	PEG_R2D_C_N15_SPN
13B3	PEG_R2D_C_P<4>	PEG_R2D_C_P4_SPN
13B3	PEG_R2D_C_P<5>	PEG_R2D_C_P5_SPN
13B3	PEG_R2D_C_P<6>	PEG_R2D_C_P6_SPN
13B3	PEG_R2D_C_P<7>	PEG_R2D_C_P7_SPN
13B3	PEG_R2D_C_P<8>	PEG_R2D_C_P8_SPN
13B3	PEG_R2D_C_P<9>	PEG_R2D_C_P9_SPN
13B3	PEG_R2D_C_P<10>	PEG_R2D_C_P10_SPN
13B3	PEG_R2D_C_P<11>	PEG_R2D_C_P11_SPN
13A3	PEG_R2D_C_P<12>	PEG_R2D_C_P12_SPN
13A3	PEG_R2D_C_P<13>	PEG_R2D_C_P13_SPN
13A3	PEG_R2D_C_P<14>	PEG_R2D_C_P14_SPN
13A3	PEG_R2D_C_P<15>	PEG_R2D_C_P15_SPN

MAKE_BASE=TRUE

69A3 =GND_CHASSIS_TMDS_DOWN — GND_CHASSIS_IO1 (VOLTAGE=0V, MAKE_BASE=TRUE)
39A1 =GND_CHASSIS_FW_UPPER — I393

OMIT Z0612 STDOFF-4.2OD2.15H-1.2-TH
NC

OMIT Z0613 STDOFF-4.2OD2.15H-1.2-TH
NC

NB CFG ALIASES

NO-CONNECT UNUSED CFG INTERFACE PORTS

14C6	NB_CFG<3>	TP_NB_CFG3
14C6	NB_CFG<4>	TP_NB_CFG4
14C6	NB_CFG<6>	TP_NB_CFG6
14C6	NB_CFG<8>	TP_NB_CFG8
14C6	NB_CFG<10>	TP_NB_CFG10
14C6	NB_CFG<11>	TP_NB_CFG11
14C6	NB_CFG<12>	TP_NB_CFG12
14C6	NB_CFG<13>	TP_NB_CFG13
14C6	NB_CFG<14>	TP_NB_CFG14
14C6	NB_CFG<15>	TP_NB_CFG15
14C6	NB_CFG<17>	TP_NB_CFG17

MAKE_BASE=TRUE

SATA ALIASES

NO-CONNECT UNUSED SATA INTERFACE PORTS

21B6	SATA_A_D2R_N	SATA_A_D2R_N_SPN
21B6	SATA_A_D2R_P	SATA_A_D2R_P_SPN
21B6	SATA_A_R2D_C_N	SATA_A_R2D_C_N_SPN
21B6	SATA_A_R2D_C_P	SATA_A_R2D_C_P_SPN

MAKE_BASE=TRUE

PCI_EXP ALIASES

NO-CONNECT UNUSED PCI_EXP INTERFACE PORTS

22D4	PCIE_C_D2R_N	PCIE_C_D2R_N_SPN
22D4	PCIE_C_D2R_P	PCIE_C_D2R_P_SPN
22D4	PCIE_C_R2D_C_N	PCIE_C_R2D_C_N_SPN
22D4	PCIE_C_R2D_C_P	PCIE_C_R2D_C_P_SPN
22D4	PCIE_D_D2R_N	PCIE_D_D2R_N_SPN
22D4	PCIE_D_D2R_P	PCIE_D_D2R_P_SPN
22D4	PCIE_D_R2D_C_N	PCIE_D_R2D_C_N_SPN
22D4	PCIE_D_R2D_C_P	PCIE_D_R2D_C_P_SPN
22C4	PCIE_E_D2R_N	PCIE_E_D2R_N_SPN
22C4	PCIE_E_D2R_P	PCIE_E_D2R_P_SPN
22C4	PCIE_E_R2D_C_N	PCIE_E_R2D_C_N_SPN
22C4	PCIE_E_R2D_C_P	PCIE_E_R2D_C_P_SPN
22C4	PCIE_F_D2R_N	PCIE_F_D2R_N_SPN
22C4	PCIE_F_D2R_P	PCIE_F_D2R_P_SPN
22C4	PCIE_F_R2D_C_N	PCIE_F_R2D_C_N_SPN
22C4	PCIE_F_R2D_C_P	PCIE_F_R2D_C_P_SPN

MAKE_BASE=TRUE

CLOCK ALIASES

NO-CONNECT UNUSED CLOCK INTERFACE PORTS

32B4	CK410_SRC1_N	CK410_SRC1_N_SPN	5C7
32B4	CK410_SRC1_P	CK410_SRC1_P_SPN	5C7
32B4	CK410_SRC3_N	CK410_SRC3_N_SPN	5C7
32B4	CK410_SRC3_P	CK410_SRC3_P_SPN	5C7
32B4	CK410_SRC7_N	CK410_SRC7_N_SPN	5C7
32B4	CK410_SRC7_P	CK410_SRC7_P_SPN	5C7
32B4	CK410_SRC_CLKREQ1_L	CK410_SRC_CLKREQ1_L_SPN	5B7
32B4	CK410_SRC_CLKREQ3_L	CK410_SRC_CLKREQ3_L_SPN	5B7

MAKE_BASE=TRUE

SB ALIASES

NO-CONNECT UNUSED CLOCK INTERFACE PORTS

23C3 SUS_CLK_SB — SUS_CLK_SB_SPN

MAKE_BASE=TRUE

SO-DIMM ALIASES

NO-CONNECT UNUSED ADDRESS INTERFACE PORTS

28C4	MEM_A_A<15>	MEM_A_A15_SPN
28C4	MEM_A_A<14>	MEM_A_A14_SPN
29C4	MEM_B_A<15>	MEM_B_A15_SPN
29C4	MEM_B_A<14>	MEM_B_A14_SPN

MAKE_BASE=TRUE

Ethernet ALIASES

36C8	ENET_CTRL12	ENET_CTRL12_SPN
36C8	ENET_CTRL25	ENET_CTRL25_SPN

MAKE_BASE=TRUE

FIREWIRE ALIASES

NO-CONNECT UNUSED FIREWIRE INTERFACE PORTS

38B3	FW_B_TPBIAS	FW_B_TPBIAS_SPN	5B7
38B3	FW_B_TPA_P	FW_B_TPA_P_SPN	5B7
38B3	FW_B_TPA_N	FW_B_TPA_N_SPN	5B7
38B3	FW_B_TPB_P	FW_B_TPB_P_SPN	5B7
38B3	FW_B_TPB_N	FW_B_TPB_N_SPN	5B7
38B3	FW_C_TPBIAS	FW_C_TPBIAS_SPN	5B7
38B3	FW_C_TPA_P	FW_C_TPA_P_SPN	5B7
38B3	FW_C_TPA_N	FW_C_TPA_N_SPN	5B7
38B3	FW_C_TPB_P	FW_C_TPB_P_SPN	5B7
38B3	FW_C_TPB_N	FW_C_TPB_N_SPN	5B7

MAKE_BASE=TRUE

39C6 =FWPWR_PWRON — NC_FWPWR_PWRON
NO_TEST=TRUE
MAKE_BASE=TRUE

USB PORT A = External USB2.0 Port

42C5	=USB2_EXTA_P	USB2_EXTA_P	USB_A_P	22C2
42C5	=USB2_EXTA_N	USB2_EXTA_N	USB_A_N	22C2
42C8	=EXTAUSB_OC_L	EXTAUSB_OC_L	USB_A_OC_L	22C4 22D8

MAKE_BASE=TRUE

USB PORT B = Trackpad(Geyser)

40C7	=USB2_GEYSER_P	USB2_GEYSER_P	USB_B_P	22C2
40C7	=USB2_GEYSER_N	USB2_GEYSER_N	USB_B_N	22C2

MAKE_BASE=TRUE

USB PORT C = External USB2.0 Port B

42B5	=USB2_EXTB_P	USB2_EXTB_P	USB_C_P	22C2
42B5	=USB2_EXTB_N	USB2_EXTB_N	USB_C_N	22C2
42C8	=EXTBUSB_OC_L	EXTBUSB_OC_L	USB_C_OC_L	22C4 22D8

MAKE_BASE=TRUE

USB PORT D = CAMERA

67B4	=USB2_CAMERA_P	USB2_CAMERA_P	USB_D_P	22C2
67A4	=USB2_CAMERA_N	USB2_CAMERA_N	USB_D_N	22C2

MAKE_BASE=TRUE

USB PORT "E" = Unused

5C1 TP_USBP_E — USB_E_P 22C2
MAKE_BASE=TRUE
5C1 TP_USBN_E — USB_E_N 22C2
MAKE_BASE=TRUE

USB PORT "F" = IR CONTROLLER

41C6	=USB2_IR_P	USB_IR_P	USB_F_P	22C2
41C6	=USB2_IR_N	USB_IR_N	USB_F_N	22C2

MAKE_BASE=TRUE

USB PORT "G" = BLUETOOTH

44C6	=USB2_BT_P	USB_BT_P	USB_G_P	22C2
44C6	=USB2_BT_N	USB_BT_N	USB_G_N	22C2

MAKE_BASE=TRUE

USB PORT "H" = PCI-E Mini Card

43B4	=USB2_AIRPORT_P	USB2_AIRPORT_P	USB_H_P	22C2
43B4	=USB2_AIRPORT_N	USB2_AIRPORT_N	USB_H_N	22C2

MAKE_BASE=TRUE

ANALOG SWITCH GPIO

69A6 =SB_GPIO22 — SB_GPIO22 — TP_SB_GPIO22 22B6
MAKE_BASE=TRUE

45B8 14B7 PM_EXTTS_L<0> — DIMM_OVERTEMP_L 28C4 29C4
MAKE_BASE=TRUE

47C5 21C4 5C2 FWH_INIT_L — SMC_CPU_INIT_3_3_L 45D5
MAKE_BASE=TRUE

PART#	QTY	DESCRIPTION	REFERENCE DESIGNATOR(S)	BOM OPTION
860-0722	4	THERMAL STANDOFF	Z0603,Z0604,Z0605,Z0621	STANDOFF
860-0723	1	STANDOFF WIRELESS	Z0612	STANDOFF
860-0749	1	STANDOFF W/THRU HOLES,WIRELESS	Z0613	STANDOFF

SIGNAL ALIAS /RESET

SYNC_MASTER=ENET — SYNC_DATE=08/19/2005

NOTICE OF PROPRIETARY PROPERTY

THE INFORMATION CONTAINED HEREIN IS THE PROPRIETARY PROPERTY OF APPLE COMPUTER, INC. THE POSSESSOR AGREES TO THE FOLLOWING

I TO MAINTAIN THE DOCUMENT IN CONFIDENCE

II NOT TO REPRODUCE OR COPY IT

III NOT TO REVEAL OR PUBLISH IN WHOLE OR PART

APPLE COMPUTER INC.

SIZE	DRAWING NUMBER	REV.
D	051-7374	A
SCALE NONE	SHT 6 OF 79	

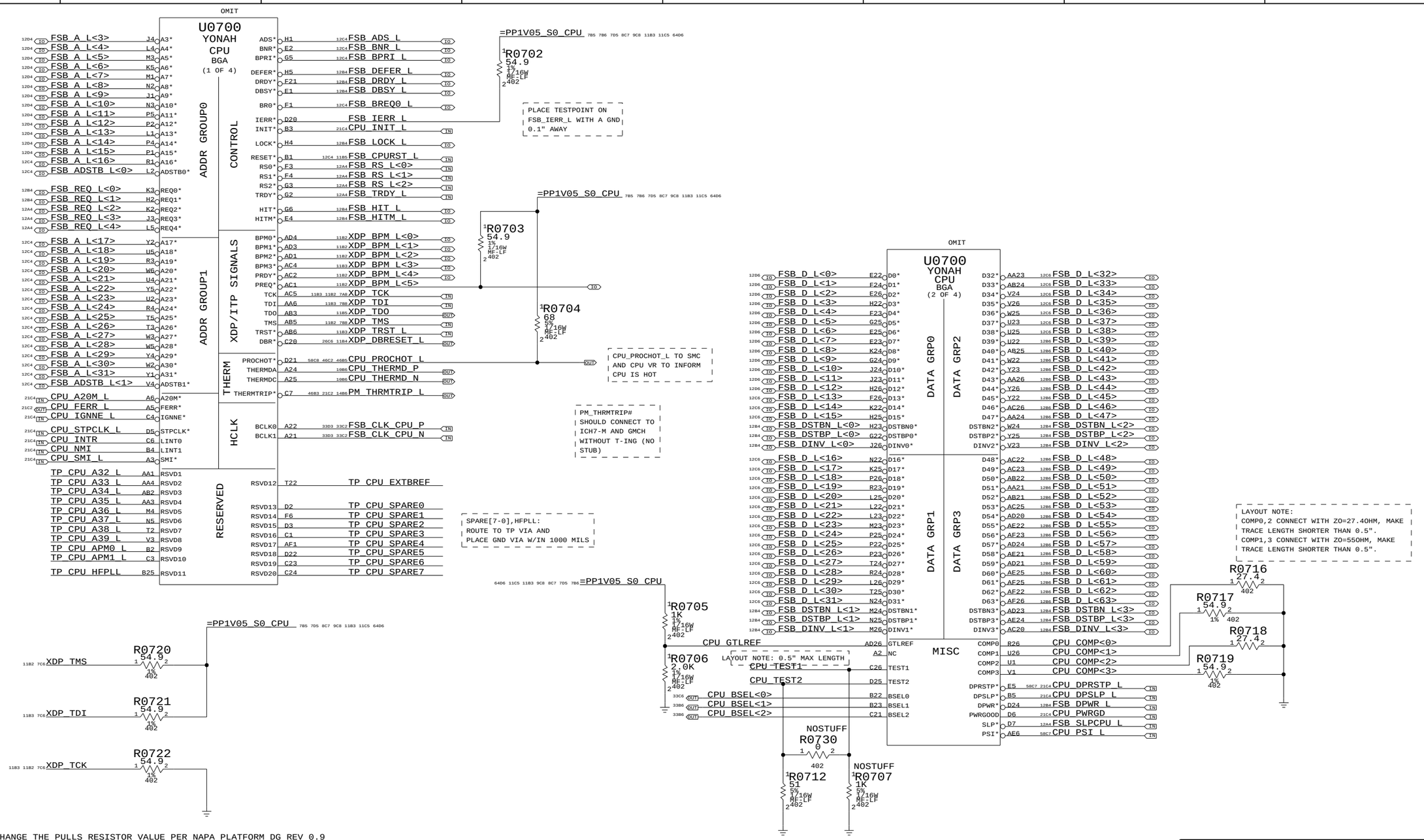

CHANGE THE PULLS RESISTOR VALUE PER NAPA PLATFORM DG REV 0.9

WE THROUGH THE ITP700FLEX CONNECTOR CONNECT TO PDB XDP BUFFER BOARD--ECM*50
SO THE TDI PULL UP THROUGH 54.9 OHM,TMS PULL UP THROUGH 54.9 OHM
TCK PULL DOWN THROUGH 54.9 OHM(FOLLOW UP XDP DESIGN REFERENCE)

CPU 1 OF 2-FSB

SYNC_MASTER=MASTER SYNC_DATE=05/03/2005

NOTICE OF PROPRIETARY PROPERTY

THE INFORMATION CONTAINED HEREIN IS THE PROPRIETARY PROPERTY OF APPLE COMPUTER, INC. THE POSSESSOR AGREES TO THE FOLLOWING

I TO MAINTAIN THE DOCUMENT IN CONFIDENCE
II NOT TO REPRODUCE OR COPY IT
III NOT TO REVEAL OR PUBLISH IN WHOLE OR PART

APPLE COMPUTER INC.

SIZE	DRAWING NUMBER	REV.
D	051-7374	A
SCALE NONE	SHT 7 OF 79	

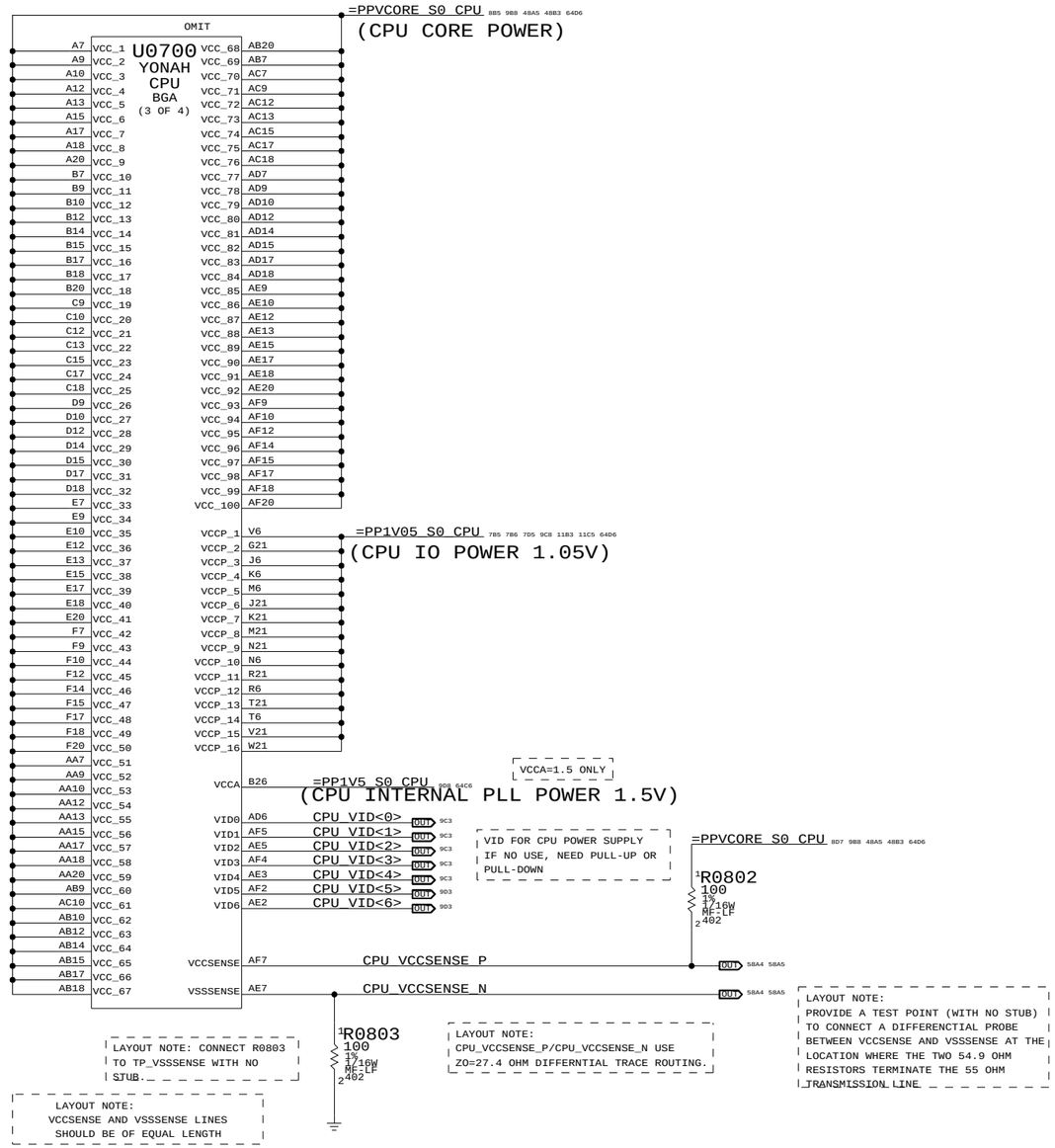

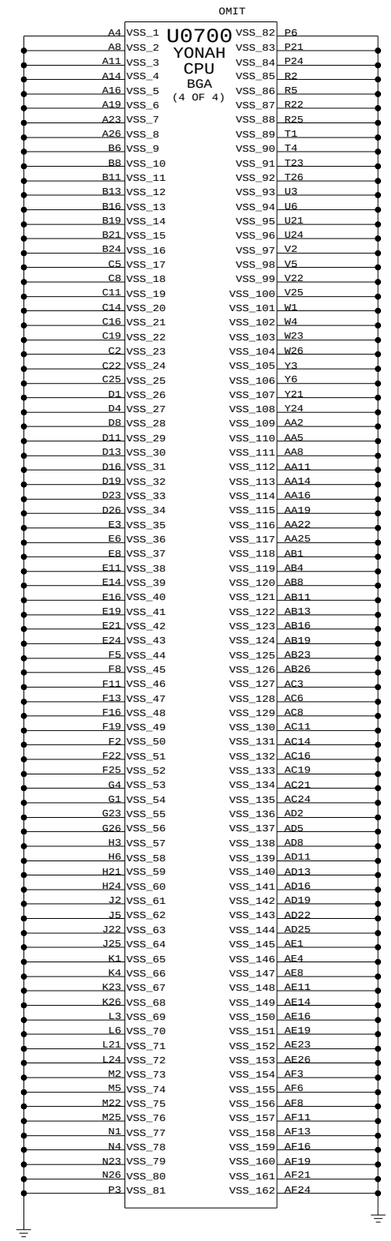

CPU 2 OF 2-PWR/GND

SYNC_MASTER=MASTER SYNC_DATE=05/03/2005

NOTICE OF PROPRIETARY PROPERTY

THE INFORMATION CONTAINED HEREIN IS THE PROPRIETARY PROPERTY OF APPLE COMPUTER, INC. THE POSSESSOR AGREES TO THE FOLLOWING

I TO MAINTAIN THE DOCUMENT IN CONFIDENCE
II NOT TO REPRODUCE OR COPY IT
III NOT TO REVEAL OR PUBLISH IN WHOLE OR PART

APPLE COMPUTER INC.

SIZE	DRAWING NUMBER	REV.
D	051-7374	A
SCALE NONE	SHT 8 OF 79	

VCCA DECOUPLING
(CPU INTERNAL PLL POWER 1.5V)

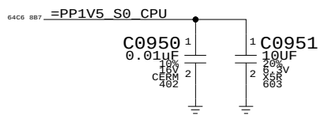

PART NUMBER	ALTERNATE FOR PART NUMBER	BOM OPTION	REF DES	COMMENTS:
138S0603	138S0602	?	ALL	USE SAMSUNG AND MURATA ONLY
138S0606	138S0602	?	ALL	USE TAIYO

CPU CORE VID<> SETTINGS

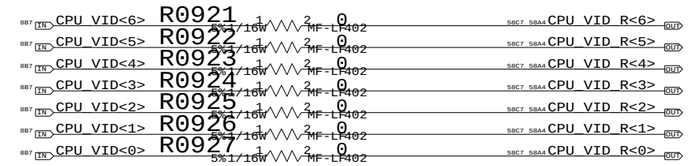

R0921~R0927 FOR CPU VOLTAGE MANUAL SETTING

VCCP CORE DECOUPLING
(CPU IO POWER 1.05V)

THIS 470UF FOR CPU,GMCH FSB BUS 1.05V

PLACE NEAR THE NORTH BRIDGE
ON BOTTOM SIDE

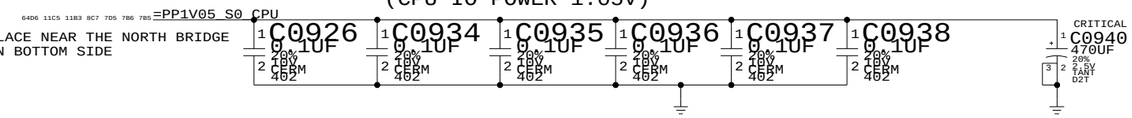

VCC CORE DECOUPLING
(CPU CORE POWER)

PLACE NEAR THE CPU
ON BOTTOM SIDE
(10 PCS ON NORTH SIDE
10 PCS ON SOUTH SIDE)

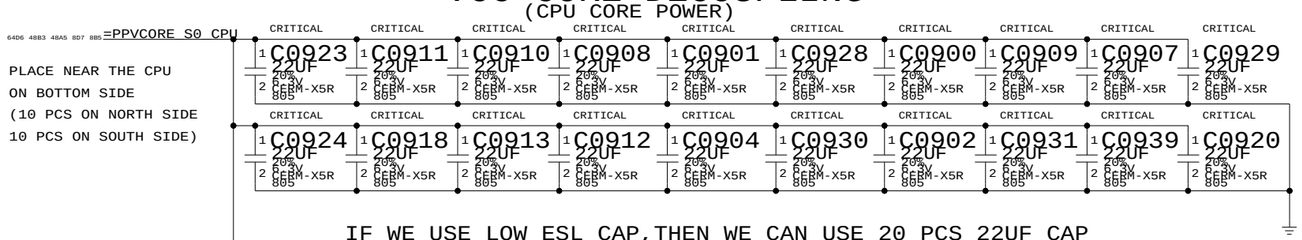

IF WE USE LOW ESL CAP,THEN WE CAN USE 20 PCS 22UF CAP

(2 PCS ON NORTH SIDE
2 PCS ON SOUTH SIDE)

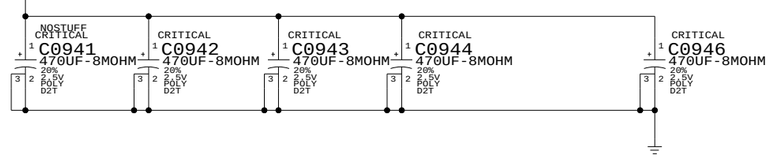

		MIN	TYP	MAX
DUAL CORE SV CPU	VCCHFM	1.1625		1.30
	VCCLFM	TBD		TBD
SINGLE CORE SV CPU	VCCHFM	1.1625		1.30
	VCCLFM		TBD	
DUAL CORE LV CPU	VCCHFM	1.0		1.1625
	VCCLFM		TBD	
ULV CPU	VCCHFM	TBD		TBD
	VCCLFM		TBD	

UNIT: V

ALL PROCESSOR DEFAULT VCORE FOR INITIAL POWER UP IS 1.2V
TWO PROCESSORS AT THE SAME FREQUENCY MAY HAVE DIFFERENT SETTING WITH THE VID RANGE(VCORE VOLTAGE)!
REFER TO YONAH PROCESSOR EMTS REV 1.0
VCCHFM: VCORE AT HIGHEST FREQUENCY MODE
VCCLFM: VCORE AT LOWEST FREQUENCY MODE

CPU DECAPS & VID<>

NOTICE OF PROPRIETARY PROPERTY

THE INFORMATION CONTAINED HEREIN IS THE PROPRIETARY PROPERTY OF APPLE COMPUTER, INC. THE POSSESSOR AGREES TO THE FOLLOWING

I TO MAINTAIN THE DOCUMENT IN CONFIDENCE
II NOT TO REPRODUCE OR COPY IT
III NOT TO REVEAL OR PUBLISH IN WHOLE OR PART

APPLE COMPUTER INC.

SIZE	DRAWING NUMBER	REV.
D	051-7374	A
SCALE NONE	SHT 9 OF 79	

CPU ZONE THERMAL SENSOR

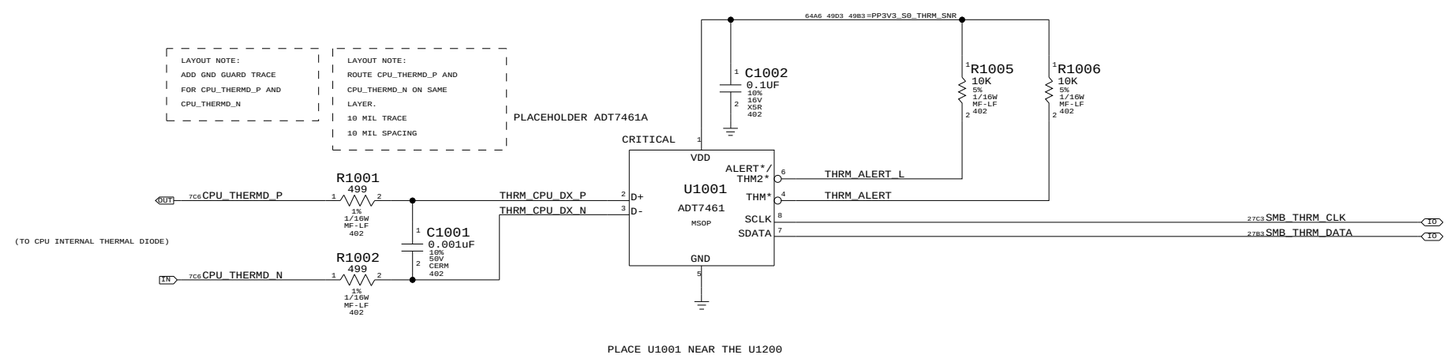

CPU MISC1-TEMP SENSOR

SYNC_MASTER=ENET SYNC_DATE=08/19/2005

NOTICE OF PROPRIETARY PROPERTY

THE INFORMATION CONTAINED HEREIN IS THE PROPRIETARY PROPERTY OF APPLE COMPUTER, INC. THE POSSESSOR AGREES TO THE FOLLOWING

I TO MAINTAIN THE DOCUMENT IN CONFIDENCE

II NOT TO REPRODUCE OR COPY IT

III NOT TO REVEAL OR PUBLISH IN WHOLE OR PART

APPLE COMPUTER INC.

SIZE	DRAWING NUMBER	REV.
D	051-7374	A
SCALE NONE	SHT 10 OF 79	

CPU ITP700FLEX DEBUG SUPPORT

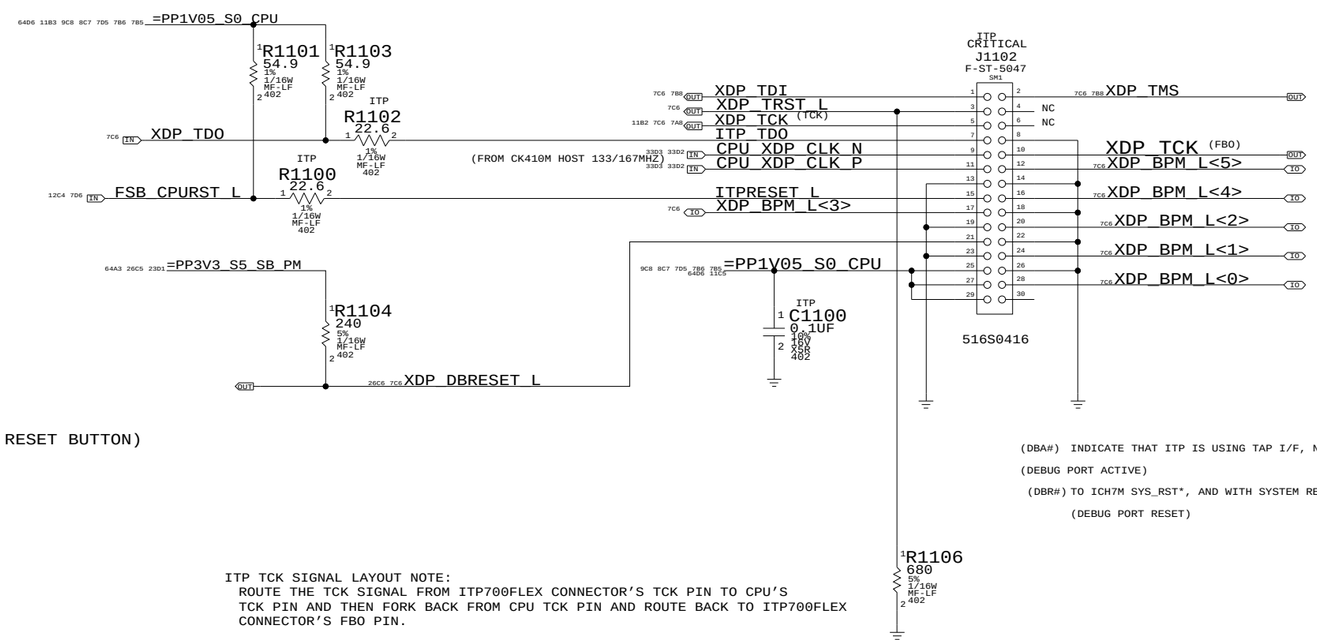

(AND WITH RESET BUTTON)

(DBA#) INDICATE THAT ITP IS USING TAP I/F, NC IN 945GM CHIPSET SYSTEM.

(DEBUG PORT ACTIVE)

(DBR#) TO ICH7M SYS_RST*, AND WITH SYSTEM RESET LOGIC

(DEBUG PORT RESET)

R1106 680 5% 1/16W MF-LF 402

ITP TCK SIGNAL LAYOUT NOTE:
ROUTE THE TCK SIGNAL FROM ITP700FLEX CONNECTOR'S TCK PIN TO CPU'S TCK PIN AND THEN FORK BACK FROM CPU TCK PIN AND ROUTE BACK TO ITP700FLEX CONNECTOR'S FBO PIN.

CPU ITP700FLEX DEBUG

SYNC_MASTER=MASTER SYNC_DATE=5/23/05

NOTICE OF PROPRIETARY PROPERTY

THE INFORMATION CONTAINED HEREIN IS THE PROPRIETARY PROPERTY OF APPLE COMPUTER, INC. THE POSSESSOR AGREES TO THE FOLLOWING

I TO MAINTAIN THE DOCUMENT IN CONFIDENCE

II NOT TO REPRODUCE OR COPY IT

III NOT TO REVEAL OR PUBLISH IN WHOLE OR PART

APPLE COMPUTER INC.

SIZE	DRAWING NUMBER	REV.
D	051-7374	A
SCALE NONE	SHT 11 OF 79	

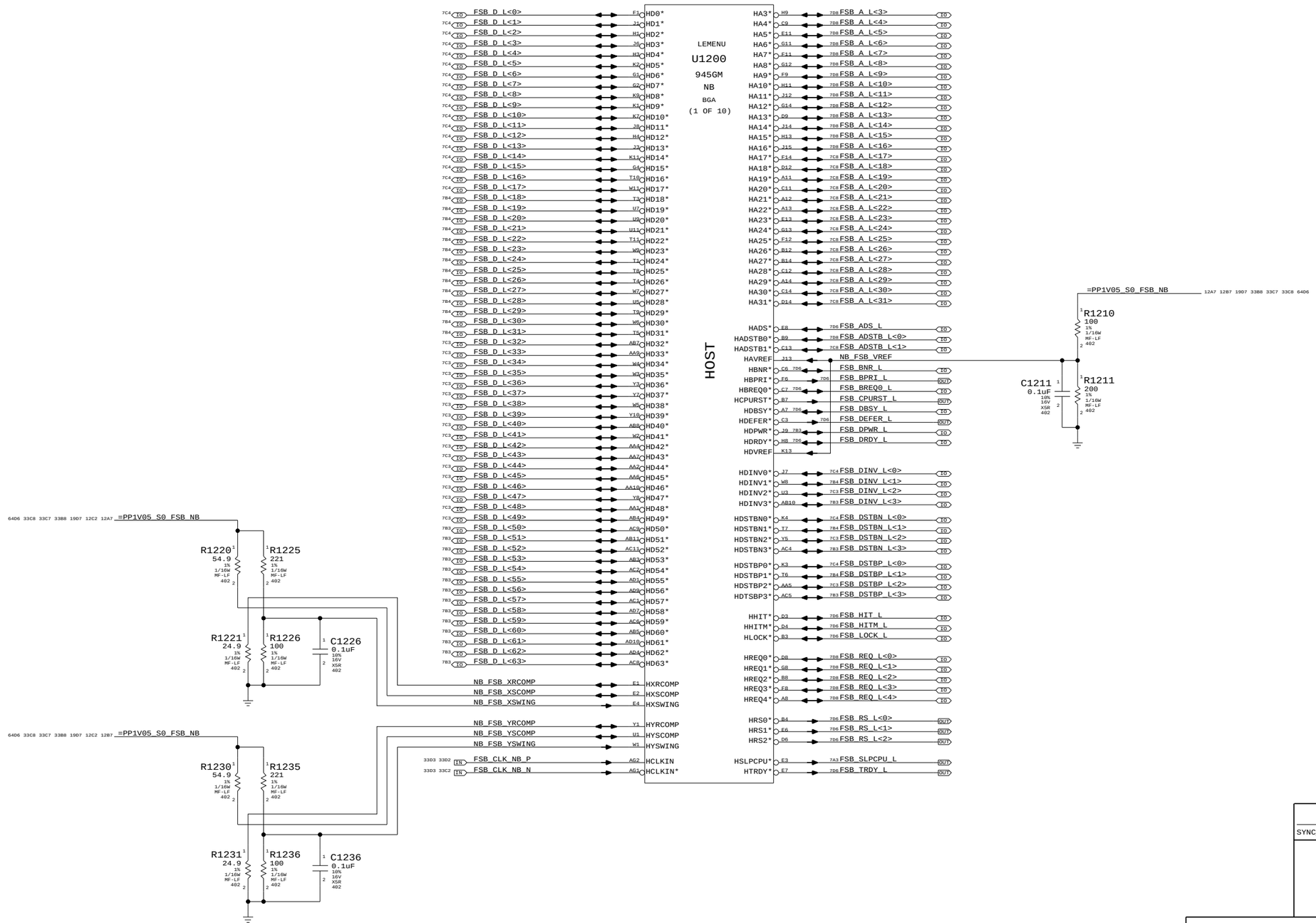

NB CPU Interface

SYNC_MASTER=NB SYNC_DATE=07/25/2005

NOTICE OF PROPRIETARY PROPERTY

THE INFORMATION CONTAINED HEREIN IS THE PROPRIETARY PROPERTY OF APPLE COMPUTER, INC. THE POSSESSOR AGREES TO THE FOLLOWING

I TO MAINTAIN THE DOCUMENT IN CONFIDENCE

II NOT TO REPRODUCE OR COPY IT

III NOT TO REVEAL OR PUBLISH IN WHOLE OR PART

APPLE COMPUTER INC.

SIZE	DRAWING NUMBER	REV.
D	051-7374	A
SCALE NONE	SHT 12 OF 79	

LVDS Disable

Can leave all signals NC if LVDS is not implemented
Tie VCC_TXLVDS and VCCA_LVDS to GND. If SDVO is used
VCCD_LVDS must remain powered with proper decoupling.
Otherwise, tie VCCD_LVDS to GND also.

TV-Out Signal Usage:

Composite: DACA only
S-Video: DACB & DACC only
Component: DACA, DACB & DACC

Unused DAC outputs must remain powered, but can omit
filtering components. Unused DAC outputs should
connect to GND through 75-ohm resistors.

TV-Out Disable

Tie DACx_OUT, IRTNx, and IREF to 1.5V power rail.
Tie VCCD_TVDAC, VCCD_QTVDAC, VCCA_TVDACx, and
VCCA_TVBG to 1.5V power rail. Tie VSSA_TVBG to GND.

CRT Disable

Tie R/R#/G/G#/B/B# and IREF to VCC Core rail, tie
HSYNC and VSYNC to GND. Tie VCCA_CRTDAC to VCC Core
rail, and tie VSSA_CRTDAC and VCC_SYNC to GND.

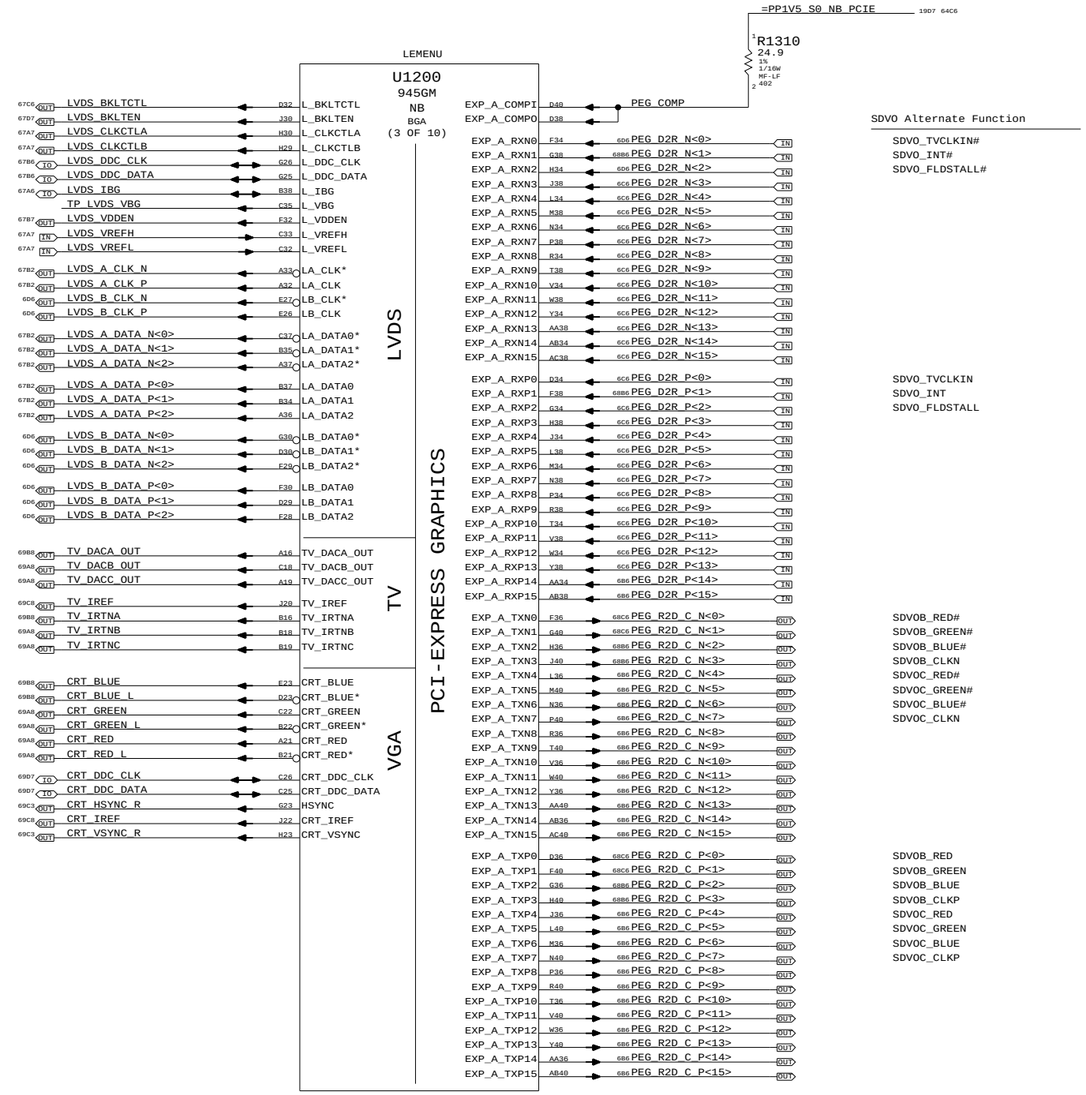

NB PEG / Video Interfaces

SYNC_MASTER=NB SYNC_DATE=07/25/2005

NOTICE OF PROPRIETARY PROPERTY

THE INFORMATION CONTAINED HEREIN IS THE PROPRIETARY PROPERTY OF APPLE COMPUTER, INC. THE POSSESSOR AGREES TO THE FOLLOWING

I TO MAINTAIN THE DOCUMENT IN CONFIDENCE
II NOT TO REPRODUCE OR COPY IT
III NOT TO REVEAL OR PUBLISH IN WHOLE OR PART

APPLE COMPUTER INC.

SIZE	DRAWING NUMBER	REV.
D	051-7374	A
SCALE NONE	SHT 13 OF 79	

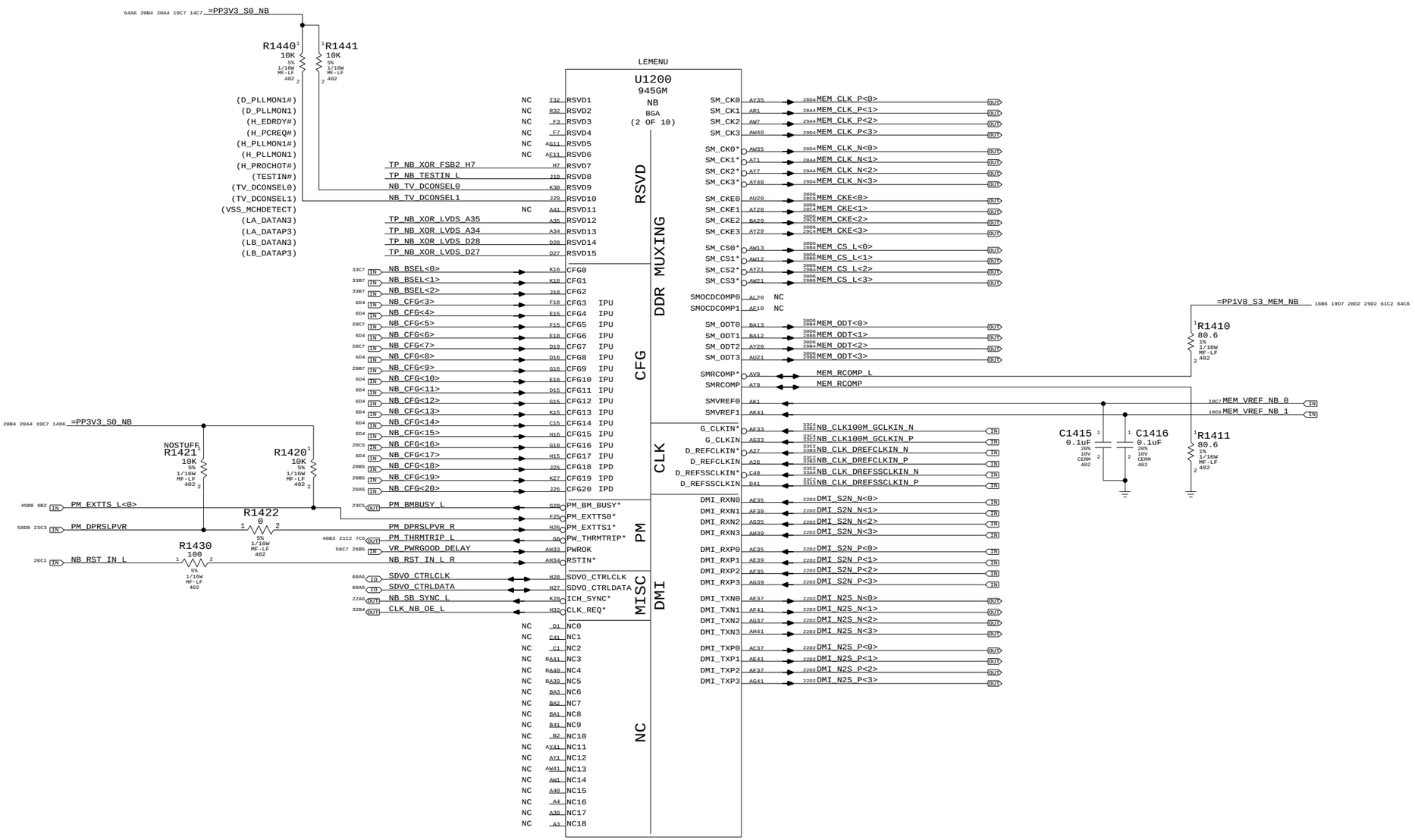

NB Misc Interfaces

SYNC_MASTER=NB SYNC_DATE=08/15/2005

NOTICE OF PROPRIETARY PROPERTY

THE INFORMATION CONTAINED HEREIN IS THE PROPRIETARY PROPERTY OF APPLE COMPUTER, INC. THE POSSESSOR AGREES TO THE FOLLOWING

I TO MAINTAIN THE DOCUMENT IN CONFIDENCE

II NOT TO REPRODUCE OR COPY IT

III NOT TO REVEAL OR PUBLISH IN WHOLE OR PART

APPLE COMPUTER INC.

SIZE	DRAWING NUMBER	REV.
D	051-7374	A
SCALE NONE	SHT 14 OF 79	

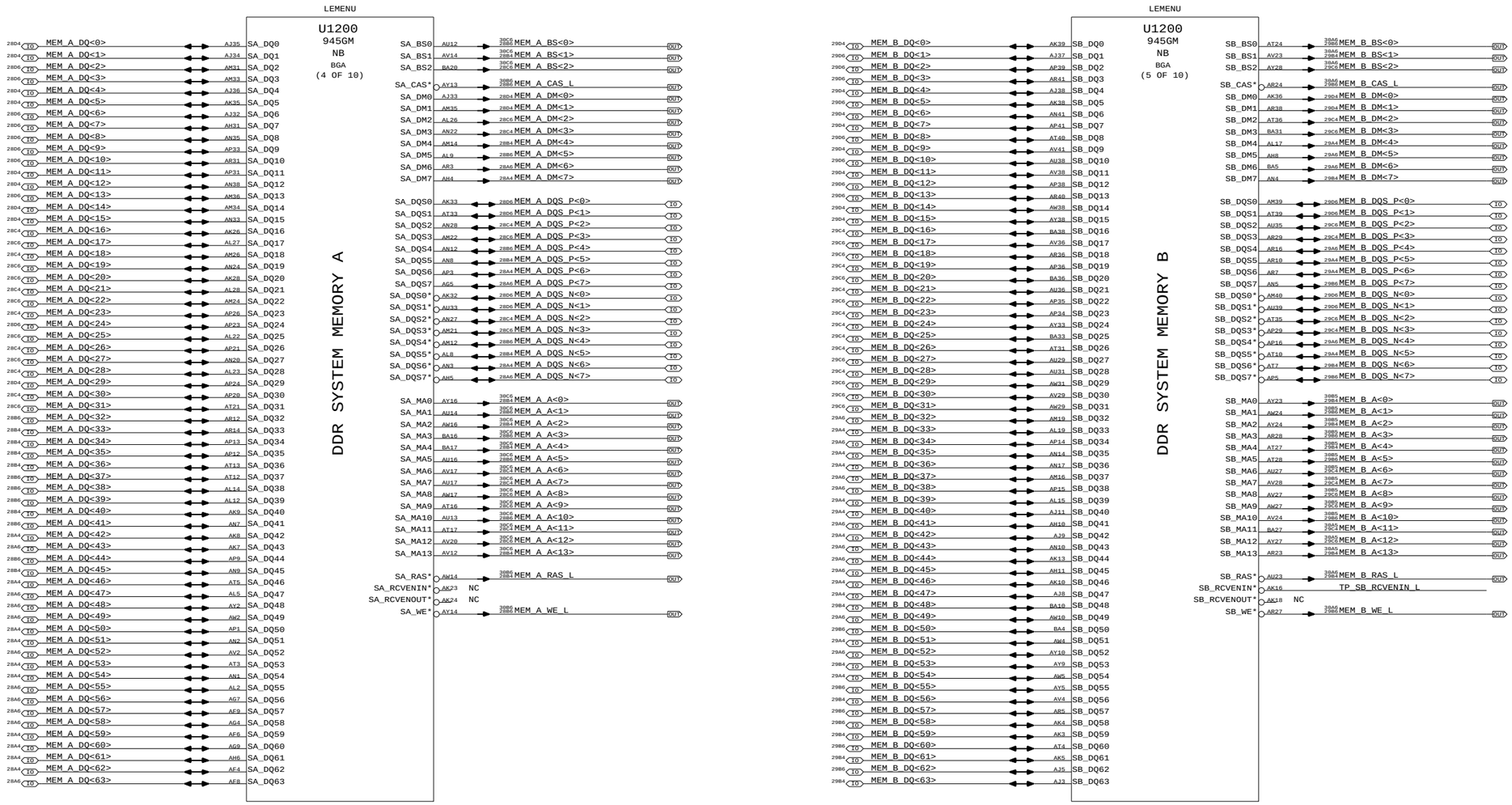

NB DDR2 Interfaces

SYNC_MASTER=NB SYNC_DATE=07/25/2005

NOTICE OF PROPRIETARY PROPERTY

THE INFORMATION CONTAINED HEREIN IS THE PROPRIETARY PROPERTY OF APPLE COMPUTER, INC. THE POSSESSOR AGREES TO THE FOLLOWING

I TO MAINTAIN THE DOCUMENT IN CONFIDENCE

II NOT TO REPRODUCE OR COPY IT

III NOT TO REVEAL OR PUBLISH IN WHOLE OR PART

APPLE COMPUTER INC.

SIZE	DRAWING NUMBER	REV.
D	051-7374	A
SCALE NONE	SHT 15 OF 79	

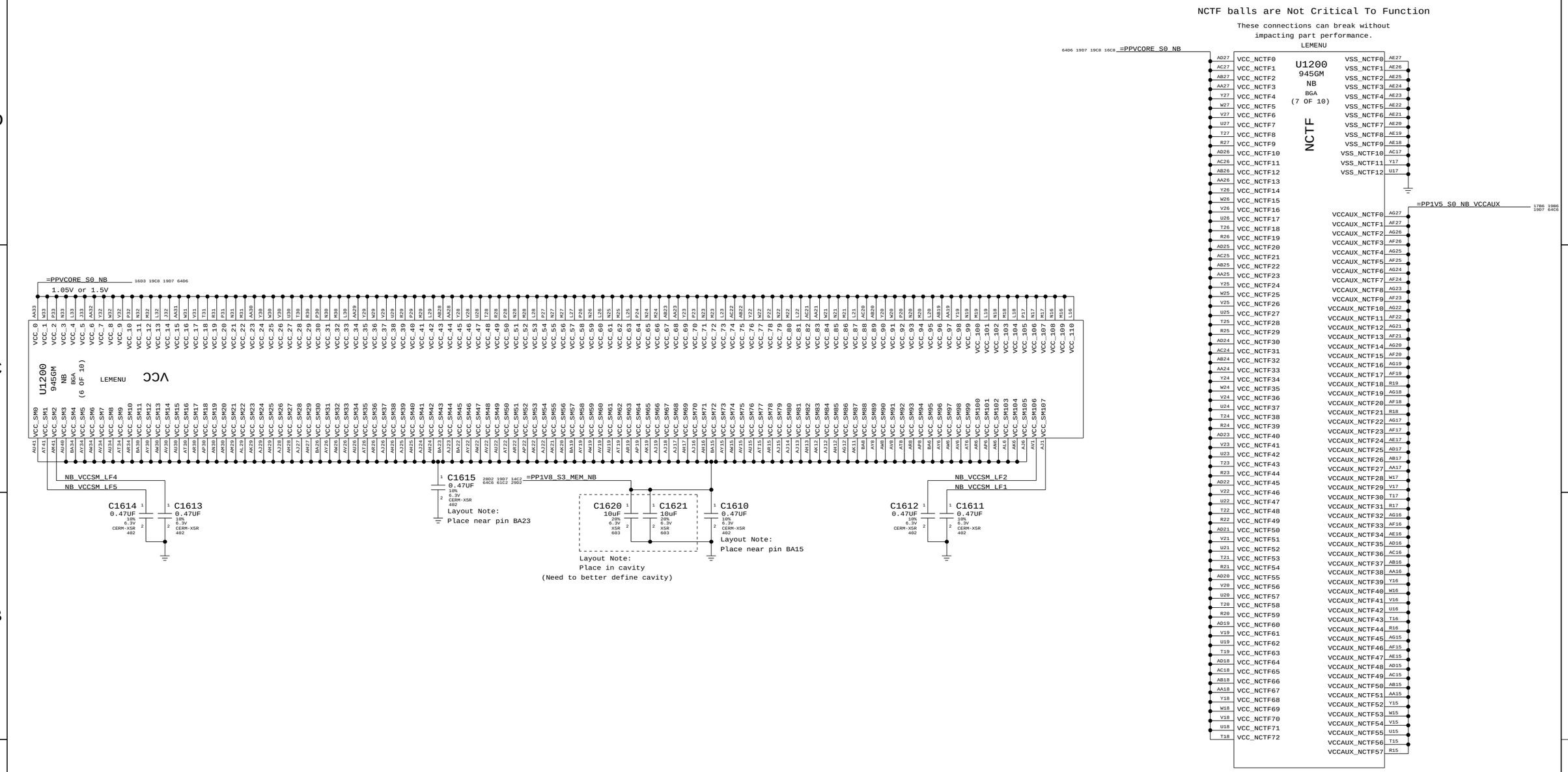

NB Power 1

SYNC_MASTER=NB SYNC_DATE=07/25/2005

NOTICE OF PROPRIETARY PROPERTY

THE INFORMATION CONTAINED HEREIN IS THE PROPRIETARY PROPERTY OF APPLE COMPUTER, INC. THE POSSESSOR AGREES TO THE FOLLOWING

I TO MAINTAIN THE DOCUMENT IN CONFIDENCE

II NOT TO REPRODUCE OR COPY IT

III NOT TO REVEAL OR PUBLISH IN WHOLE OR PART

APPLE COMPUTER INC.

SIZE	DRAWING NUMBER	REV.
D	051-7374	A
SCALE NONE	SHT 16 OF 79	

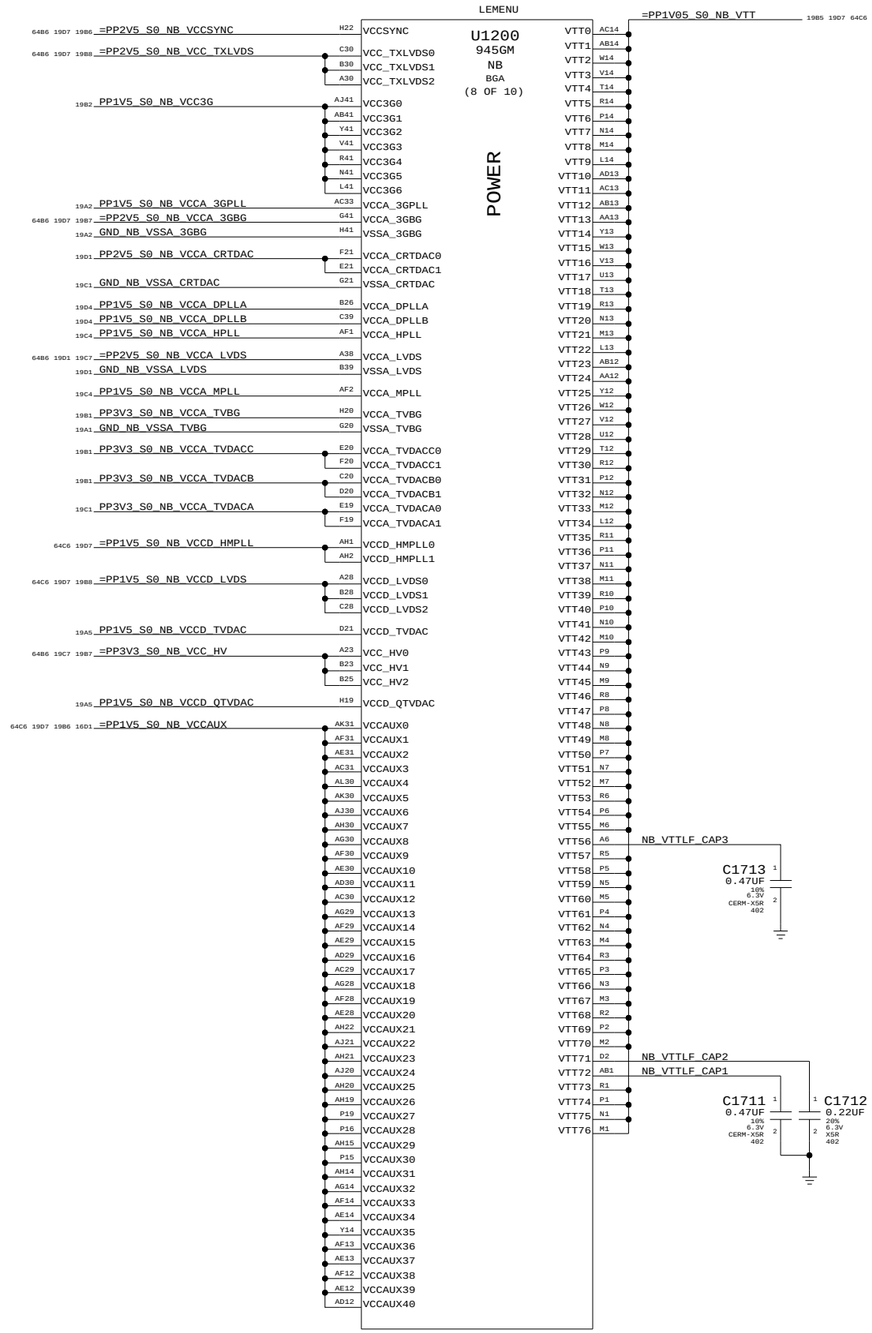

NB Power 2

SYNC_MASTER=NB SYNC_DATE=07/25/2005

NOTICE OF PROPRIETARY PROPERTY

THE INFORMATION CONTAINED HEREIN IS THE PROPRIETARY PROPERTY OF APPLE COMPUTER, INC. THE POSSESSOR AGREES TO THE FOLLOWING

I TO MAINTAIN THE DOCUMENT IN CONFIDENCE

II NOT TO REPRODUCE OR COPY IT

III NOT TO REVEAL OR PUBLISH IN WHOLE OR PART

APPLE COMPUTER INC.

SIZE	DRAWING NUMBER	REV.
D	051-7374	A
SCALE NONE	SHT 17 OF 79	

LEMENU

U1200
945GM
NB
BGA
(9 OF 10)

VSS

AC41	VSS_0	VSS_97	AK34
AA41	VSS_1	VSS_98	AG34
W41	VSS_2	VSS_99	AF34
T41	VSS_3	VSS_100	AE34
P41	VSS_4	VSS_101	AC34
M41	VSS_5	VSS_102	C34
J41	VSS_6	VSS_103	AW33
F41	VSS_7	VSS_104	AV33
AV40	VSS_8	VSS_105	AR33
AP40	VSS_9	VSS_106	AE33
AN40	VSS_10	VSS_107	AB33
AK40	VSS_11	VSS_108	Y33
AJ40	VSS_12	VSS_109	V33
AH40	VSS_13	VSS_110	T33
AG40	VSS_14	VSS_111	R33
AF40	VSS_15	VSS_112	M33
AE40	VSS_16	VSS_113	H33
B40	VSS_17	VSS_114	G33
AY39	VSS_18	VSS_115	F33
AW39	VSS_19	VSS_116	D33
AV39	VSS_20	VSS_117	B33
AR39	VSS_21	VSS_118	AH32
AN39	VSS_22	VSS_119	AG32
AJ39	VSS_23	VSS_120	AF32
AC39	VSS_24	VSS_121	AE32
AB39	VSS_25	VSS_122	AC32
AA39	VSS_26	VSS_123	AB32
Y39	VSS_27	VSS_124	G32
W39	VSS_28	VSS_125	B32
V39	VSS_29	VSS_126	AY31
T39	VSS_30	VSS_127	AV31
R39	VSS_31	VSS_128	AN31
P39	VSS_32	VSS_129	AJ31
N39	VSS_33	VSS_130	AG31
M39	VSS_34	VSS_131	AB31
L39	VSS_35	VSS_132	Y31
J39	VSS_36	VSS_133	AB30
H39	VSS_37	VSS_134	E30
G39	VSS_38	VSS_135	AT29
F39	VSS_39	VSS_136	AN29
D39	VSS_40	VSS_137	AB29
AT38	VSS_41	VSS_138	T29
AM38	VSS_42	VSS_139	N29
AH38	VSS_43	VSS_140	K29
AG38	VSS_44	VSS_141	G29
AF38	VSS_45	VSS_142	E29
AE38	VSS_46	VSS_143	C29
C38	VSS_47	VSS_144	B29
AK37	VSS_48	VSS_145	A29
AH37	VSS_49	VSS_146	BA28
AB37	VSS_50	VSS_147	AW28
AA37	VSS_51	VSS_148	AU28
Y37	VSS_52	VSS_149	AP28
W37	VSS_53	VSS_150	AM28
V37	VSS_54	VSS_151	AD28
T37	VSS_55	VSS_152	AC28
R37	VSS_56	VSS_153	W28
P37	VSS_57	VSS_154	J28
N37	VSS_58	VSS_155	E28
M37	VSS_59	VSS_156	AP27
L37	VSS_60	VSS_157	AK27
J37	VSS_61	VSS_158	AK27
H37	VSS_62	VSS_159	J27
G37	VSS_63	VSS_160	G27
F37	VSS_64	VSS_161	F27
D37	VSS_65	VSS_162	C27
AY36	VSS_66	VSS_163	B27
AW36	VSS_67	VSS_164	AN26
AN36	VSS_68	VSS_165	M26
AH36	VSS_69	VSS_166	K26
AG36	VSS_70	VSS_167	F26
AF36	VSS_71	VSS_168	D26
AE36	VSS_72	VSS_169	AK25
AC36	VSS_73	VSS_170	P25
C36	VSS_74	VSS_171	K25
B36	VSS_75	VSS_172	H25
BA35	VSS_76	VSS_173	E25
AV35	VSS_77	VSS_174	D25
AR35	VSS_78	VSS_175	A25
AH35	VSS_79	VSS_176	BA24
AB35	VSS_80	VSS_177	AU24
AA35	VSS_81	VSS_178	AL24
Y35	VSS_82	VSS_179	AW23
W35	VSS_83		
V35	VSS_84		
T35	VSS_85		
R35	VSS_86		
P35	VSS_87		
N35	VSS_88		
M35	VSS_89		
L35	VSS_90		
J35	VSS_91		
H35	VSS_92		
G35	VSS_93		
F35	VSS_94		
D35	VSS_95		
AN34	VSS_96		

LEMENU

U1200
945GM
NB
BGA
(10 OF 10)

VSS

AT23	VSS_180	VSS_273	J11
AN23	VSS_181	VSS_274	D11
AM23	VSS_182	VSS_275	B11
AH23	VSS_183	VSS_276	AV10
AC23	VSS_184	VSS_277	AP10
W23	VSS_185	VSS_278	AL10
K23	VSS_186	VSS_279	AJ10
J23	VSS_187	VSS_280	AG10
F23	VSS_188	VSS_281	AC10
C23	VSS_189	VSS_282	W10
AA22	VSS_190	VSS_283	U10
K22	VSS_191	VSS_284	BA9
G22	VSS_192	VSS_285	AW9
F22	VSS_193	VSS_286	AR9
E22	VSS_194	VSS_287	AH9
D22	VSS_195	VSS_288	AB9
A22	VSS_196	VSS_289	Y9
BA21	VSS_197	VSS_290	R9
AV21	VSS_198	VSS_291	G9
AR21	VSS_199	VSS_292	E9
AN21	VSS_200	VSS_293	A9
AL21	VSS_201	VSS_294	AG8
AB21	VSS_202	VSS_295	AD8
Y21	VSS_203	VSS_296	AA8
P21	VSS_204	VSS_297	U8
K21	VSS_205	VSS_298	K8
J21	VSS_206	VSS_299	C8
H21	VSS_207	VSS_300	BA7
C21	VSS_208	VSS_301	AV7
AW20	VSS_209	VSS_302	AP7
AR20	VSS_210	VSS_303	AL7
AM20	VSS_211	VSS_304	AJ7
AA20	VSS_212	VSS_305	AH7
K20	VSS_213	VSS_306	AF7
B20	VSS_214	VSS_307	AC7
A20	VSS_215	VSS_308	R7
AN19	VSS_216	VSS_309	G7
AC19	VSS_217	VSS_310	D7
W19	VSS_218	VSS_311	AG6
K19	VSS_219	VSS_312	AD6
G19	VSS_220	VSS_313	AB6
C19	VSS_221	VSS_314	Y6
AH18	VSS_222	VSS_315	U6
P18	VSS_223	VSS_316	N6
H18	VSS_224	VSS_317	K6
D18	VSS_225	VSS_318	H6
A18	VSS_226	VSS_319	B6
AY17	VSS_227	VSS_320	AV5
AR17	VSS_228	VSS_321	AF5
AP17	VSS_229	VSS_322	AD5
AM17	VSS_230	VSS_323	AY4
AK17	VSS_231	VSS_324	AR4
AV16	VSS_232	VSS_325	AP4
AN16	VSS_233	VSS_326	AL4
AL16	VSS_234	VSS_327	AJ4
J16	VSS_235	VSS_328	Y4
F16	VSS_236	VSS_329	U4
C16	VSS_237	VSS_330	R4
AN15	VSS_238	VSS_331	J4
AM15	VSS_239	VSS_332	F4
AK15	VSS_240	VSS_333	C4
N15	VSS_241	VSS_334	AY3
M15	VSS_242	VSS_335	AW3
L15	VSS_243	VSS_336	AV3
B15	VSS_244	VSS_337	AL3
A15	VSS_245	VSS_338	AH3
BA14	VSS_246	VSS_339	AG3
AT14	VSS_247	VSS_340	AF3
AK14	VSS_248	VSS_341	AD3
AD14	VSS_249	VSS_342	AC3
AA14	VSS_250	VSS_343	AA3
U14	VSS_251	VSS_344	G3
K14	VSS_252	VSS_345	AT2
H14	VSS_253	VSS_346	AR2
E14	VSS_254	VSS_347	AP2
AV13	VSS_255	VSS_348	AK2
AR13	VSS_256	VSS_349	AJ2
AN13	VSS_257	VSS_350	AD2
AM13	VSS_258	VSS_351	AB2
AL13	VSS_259	VSS_352	Y2
AG13	VSS_260	VSS_353	U2
P13	VSS_261	VSS_354	T2
F13	VSS_262	VSS_355	N2
D13	VSS_263	VSS_356	J2
B13	VSS_264	VSS_357	H2
AY12	VSS_265	VSS_358	F2
AC12	VSS_266	VSS_359	C2
K12	VSS_267	VSS_360	AL1
H12	VSS_268		
E12	VSS_269		
AD11	VSS_270		
AA11	VSS_271		
Y11	VSS_272		

NB Grounds

SYNC_MASTER=NB SYNC_DATE=07/25/2005

NOTICE OF PROPRIETARY PROPERTY

THE INFORMATION CONTAINED HEREIN IS THE PROPRIETARY PROPERTY OF APPLE COMPUTER, INC. THE POSSESSOR AGREES TO THE FOLLOWING

I TO MAINTAIN THE DOCUMENT IN CONFIDENCE

II NOT TO REPRODUCE OR COPY IT

III NOT TO REVEAL OR PUBLISH IN WHOLE OR PART

APPLE COMPUTER INC.

SIZE	DRAWING NUMBER	REV.
D	051-7374	A
SCALE NONE	SHT 18 OF 79	

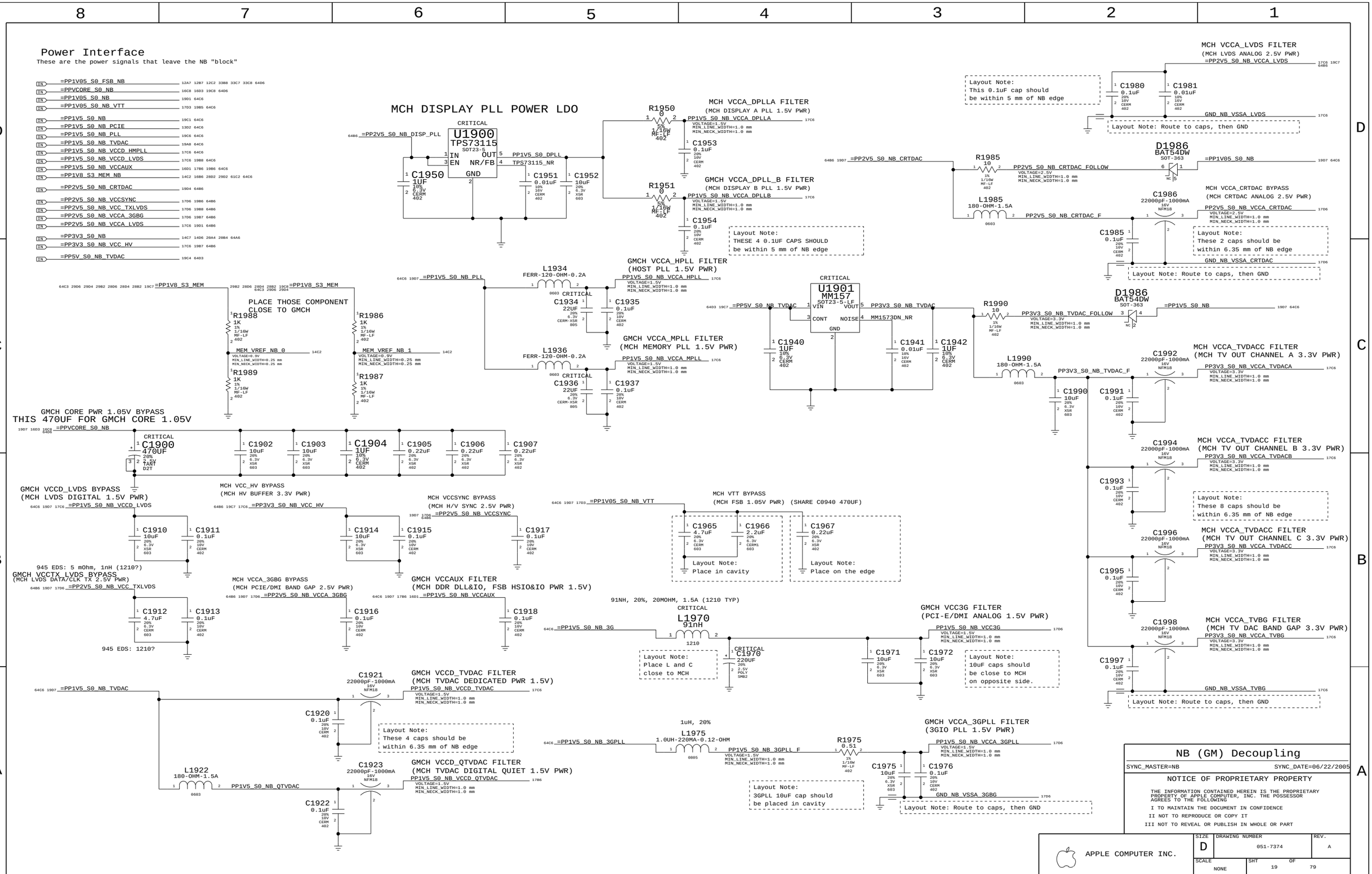
Power Interface
These are the power signals that leave the NB "block"
=PP1V05_S0_FSB_NB
=PPVCORE_S0_NB
=PP1V05_S0_NB
=PP1V05_S0_NB_VTT
=PP1V5_S0_NB
=PP1V5_S0_NB_PCIE
=PP1V5_S0_NB_PLL
=PP1V5_S0_NB_TVDAC
=PP1V5_S0_NB_VCCD_HMPLL
=PP1V5_S0_NB_VCCD_LVDS
=PP1V5_S0_NB_VCCAUX
=PP1V8_S3_MEM_NB
=PP2V5_S0_NB_CRTDAC
=PP2V5_S0_NB_VCCSYNC
=PP2V5_S0_NB_VCC_TXLVDS
=PP2V5_S0_NB_VCCA_3GBG
=PP2V5_S0_NB_VCCA_LVDS
=PP3V3_S0_NB
=PP3V3_S0_NB_VCC_HV
=PP5V_S0_NB_TVDAC
MCH DISPLAY PLL POWER LDO
CRITICAL
U1900
TPS73115
SOT23-5
IN
EN
OUT
NR/FB
GND
=PP2V5_S0_NB_DISP_PLL
C1950
1UF
C1951
0.01uF
C1952
10uF
PP1V5_S0_DPLL
TPS73115_NR
R1950
0
R1951
0
MCH VCCA_DPLLA FILTER
(MCH DISPLAY A PLL 1.5V PWR)
PP1V5_S0_NB_VCCA_DPLLA
VOLTAGE=1.5V
MIN_LINE_WIDTH=1.0 mm
MIN_NECK_WIDTH=1.0 mm
C1953
0.1uF
GMCH VCCA_DPLL_B FILTER
(MCH DISPLAY B PLL 1.5V PWR)
PP1V5_S0_NB_VCCA_DPLLB
C1954
0.1uF
Layout Note:
THESE 4 0.1UF CAPS SHOULD
be within 5 mm of NB edge
MCH VCCA_LVDS FILTER
(MCH LVDS ANALOG 2.5V PWR)
=PP2V5_S0_NB_VCCA_LVDS
C1980
0.1uF
C1981
0.01uF
GND_NB_VSSA_LVDS
Layout Note:
This 0.1uF cap should
be within 5 mm of NB edge
Layout Note: Route to caps, then GND
=PP2V5_S0_NB_CRTDAC
R1985
10
PP2V5_S0_NB_CRTDAC_FOLLOW
VOLTAGE=2.5V
MIN_LINE_WIDTH=1.0 mm
MIN_NECK_WIDTH=1.0 mm
D1986
BAT54DW
SOT-363
=PP1V05_S0_NB
L1985
180-OHM-1.5A
PP2V5_S0_NB_CRTDAC_F
C1986
22000pF-1000mA
MCH VCCA_CRTDAC BYPASS
(MCH CRTDAC ANALOG 2.5V PWR)
PP2V5_S0_NB_VCCA_CRTDAC
VOLTAGE=2.5V
MIN_LINE_WIDTH=1.0 mm
MIN_NECK_WIDTH=1.0 mm
C1985
0.1uF
Layout Note:
These 2 caps should be
within 6.35 mm of NB edge
GND_NB_VSSA_CRTDAC
Layout Note: Route to caps, then GND
=PP1V8_S3_MEM
PLACE THOSE COMPONENT
CLOSE TO GMCH
R1988
1K
MEM_VREF_NB_0
R1989
1K
R1986
1K
MEM_VREF_NB_1
R1987
1K
=PP1V5_S0_NB_PLL
L1934
FERR-120-OHM-0.2A
GMCH VCCA_HPLL FILTER
(HOST PLL 1.5V PWR)
PP1V5_S0_NB_VCCA_HPLL
C1934
22UF
C1935
0.1uF
L1936
FERR-120-OHM-0.2A
GMCH VCCA_MPLL FILTER
(MCH MEMORY PLL 1.5V PWR)
PP1V5_S0_NB_VCCA_MPLL
C1936
22UF
C1937
0.1uF
=PP5V_S0_NB_TVDAC
CRITICAL
U1901
MM157
SOT23-5-LF
VIN
CONT
NOISE
VOUT
GND
PP3V3_S0_NB_TVDAC
MM1573DN_NR
C1940
1UF
C1941
0.01uF
C1942
1UF
R1990
10
PP3V3_S0_NB_TVDAC_FOLLOW
VOLTAGE=3.3V
MIN_LINE_WIDTH=1.0 mm
MIN_NECK_WIDTH=1.0 mm
D1986
BAT54DW
SOT-363
=PP1V5_S0_NB
L1990
180-OHM-1.5A
PP3V3_S0_NB_TVDAC_F
C1990
10uF
C1991
0.1uF
C1992
22000pF-1000mA
MCH VCCA_TVDACC FILTER
(MCH TV OUT CHANNEL A 3.3V PWR)
PP3V3_S0_NB_VCCA_TVDACA
VOLTAGE=3.3V
MIN_LINE_WIDTH=1.0 mm
MIN_NECK_WIDTH=1.0 mm
C1994
22000pF-1000mA
MCH VCCA_TVDACC FILTER
(MCH TV OUT CHANNEL B 3.3V PWR)
PP3V3_S0_NB_VCCA_TVDACB
VOLTAGE=3.3V
MIN_LINE_WIDTH=1.0 mm
MIN_NECK_WIDTH=1.0 mm
C1993
0.1uF
Layout Note:
These 8 caps should be
within 6.35 mm of NB edge
C1996
22000pF-1000mA
MCH VCCA_TVDACC FILTER
(MCH TV OUT CHANNEL C 3.3V PWR)
PP3V3_S0_NB_VCCA_TVDACC
VOLTAGE=3.3V
MIN_LINE_WIDTH=1.0 mm
MIN_NECK_WIDTH=1.0 mm
C1995
0.1uF
C1998
22000pF-1000mA
MCH VCCA_TVBG FILTER
(MCH TV DAC BAND GAP 3.3V PWR)
PP3V3_S0_NB_VCCA_TVBG
VOLTAGE=3.3V
MIN_LINE_WIDTH=1.0 mm
MIN_NECK_WIDTH=1.0 mm
C1997
0.1uF
GND_NB_VSSA_TVBG
Layout Note: Route to caps, then GND
GMCH CORE PWR 1.05V BYPASS
THIS 470UF FOR GMCH CORE 1.05V
=PPVCORE_S0_NB
CRITICAL
C1900
470UF
2.5V
TANT
D2T
C1902
10uF
C1903
10uF
C1904
1UF
C1905
0.22uF
C1906
0.22uF
C1907
0.22uF
GMCH VCCD_LVDS BYPASS
(MCH LVDS DIGITAL 1.5V PWR)
=PP1V5_S0_NB_VCCD_LVDS
C1910
10uF
C1911
0.1uF
MCH VCC_HV BYPASS
(MCH HV BUFFER 3.3V PWR)
=PP3V3_S0_NB_VCC_HV
C1914
10uF
C1915
0.1uF
MCH VCCSYNC BYPASS
(MCH H/V SYNC 2.5V PWR)
=PP2V5_S0_NB_VCCSYNC
C1917
0.1uF
=PP1V05_S0_NB_VTT
MCH VTT BYPASS
(MCH FSB 1.05V PWR) (SHARE C0940 470UF)
C1965
4.7uF
C1966
2.2uF
C1967
0.22uF
Layout Note:
Place in cavity
Layout Note:
Place on the edge
945 EDS: 5 mOhm, 1nH (1210?)
GMCH VCCTX_LVDS BYPASS
(MCH LVDS DATA/CLK TX 2.5V PWR)
=PP2V5_S0_NB_VCC_TXLVDS
C1912
4.7uF
C1913
0.1uF
945 EDS: 1210?
MCH VCCA_3GBG BYPASS
(MCH PCIE/DMI BAND GAP 2.5V PWR)
=PP2V5_S0_NB_VCCA_3GBG
C1916
0.1uF
GMCH VCCAUX FILTER
(MCH DDR DLL&IO, FSB HSIO&IO PWR 1.5V)
=PP1V5_S0_NB_VCCAUX
C1918
0.1uF
91NH, 20%, 20MOHM, 1.5A (1210 TYP)
CRITICAL
L1970
91nH
1210
=PP1V5_S0_NB_3G
Layout Note:
Place L and C
close to MCH
CRITICAL
C1970
220UF
2.5V
POLY
SMB2
GMCH VCC3G FILTER
(PCI-E/DMI ANALOG 1.5V PWR)
PP1V5_S0_NB_VCC3G
VOLTAGE=1.5V
MIN_LINE_WIDTH=1.0 mm
MIN_NECK_WIDTH=1.0 mm
C1971
10uF
C1972
10uF
Layout Note:
10uF caps should
be close to MCH
on opposite side.
=PP1V5_S0_NB_TVDAC
C1921
22000pF-1000mA
GMCH VCCD_TVDAC FILTER
(MCH TVDAC DEDICATED PWR 1.5V)
PP1V5_S0_NB_VCCD_TVDAC
VOLTAGE=1.5V
MIN_LINE_WIDTH=1.0 mm
MIN_NECK_WIDTH=1.0 mm
C1920
0.1uF
Layout Note:
These 4 caps should be
within 6.35 mm of NB edge
1uH, 20%
L1975
1.0UH-220MA-0.12-OHM
0805
=PP1V5_S0_NB_3GPLL
PP1V5_S0_NB_3GPLL_F
VOLTAGE=1.5V
MIN_LINE_WIDTH=1.0 mm
MIN_NECK_WIDTH=1.0 mm
R1975
0.51
GMCH VCCA_3GPLL FILTER
(3GIO PLL 1.5V PWR)
PP1V5_S0_NB_VCCA_3GPLL
VOLTAGE=1.5V
MIN_LINE_WIDTH=1.0 mm
MIN_NECK_WIDTH=1.0 mm
C1975
10uF
C1976
0.1uF
GND_NB_VSSA_3GBG
Layout Note:
3GPLL 10uF cap should
be placed in cavity
Layout Note: Route to caps, then GND
L1922
180-OHM-1.5A
PP1V5_S0_NB_QTVDAC
C1923
22000pF-1000mA
GMCH VCCD_QTVDAC FILTER
(MCH TVDAC DIGITAL QUIET 1.5V PWR)
PP1V5_S0_NB_VCCD_QTVDAC
VOLTAGE=1.5V
MIN_LINE_WIDTH=1.0 mm
MIN_NECK_WIDTH=1.0 mm
C1922
0.1uF
NB (GM) Decoupling
SYNC_MASTER=NB
SYNC_DATE=06/22/2005
NOTICE OF PROPRIETARY PROPERTY
THE INFORMATION CONTAINED HEREIN IS THE PROPRIETARY PROPERTY OF APPLE COMPUTER, INC. THE POSSESSOR AGREES TO THE FOLLOWING
I TO MAINTAIN THE DOCUMENT IN CONFIDENCE
II NOT TO REPRODUCE OR COPY IT
III NOT TO REVEAL OR PUBLISH IN WHOLE OR PART
APPLE COMPUTER INC.
SIZE
D
DRAWING NUMBER
051-7374
REV.
A
SCALE
NONE
SHT
19
OF
79

NB_CFG<3>	RESERVED

NB_CFG<4>	RESERVED

14C6 NB_CFG<5>

Internal pull-up

NBCFG_DMI_X2

R2075 2.2K 5% 1/16W MF-LF 402

NB_CFG<5> DMI x2 Select	High = DMIx4 Low = DMIx2

PROBABLY NOT NEEDED

NB_CFG<6>	RESERVED

14C6 NB_CFG<7>

Internal pull-up

NO STUFF

R2077 2.2K 5% 1/16W MF-LF 402

NB_CFG<7> CPU Strap	High = Mobile CPU Low = RESERVED

NB_CFG<8>	RESERVED

14C6 NB_CFG<9>

Internal pull-up

NBCFG_PEG_REVERSE

R2079 2.2K 5% 1/16W MF-LF 402

NB_CFG<9> PCIE Graphics Lane Reversal	High = Normal Low = Reversed

NB_CFG<10>	RESERVED

NB_CFG<11>	RESERVED

Internal pull-ups

NB_CFG<13:12>	00 = Partial Clock Gating Disable 01 = XOR Mode Enabled 10 = All-Z Mode Enabled 11 = Normal Operation

NB_CFG<14>	RESERVED

NB_CFG<15>	RESERVED

14C6 NB_CFG<16>

Internal pull-up

NBCFG_DYN_ODT_DISABLE

R2085 2.2K 5% 1/16W MF-LF 402

NB_CFG<16> FSB Dynamic ODT	High = Enabled Low = Disabled

NB_CFG<17>	RESERVED

=PP3V3_S0_NB 14C7 14D6 19C7 20A4 20B4 64A6

NBCFG_VCC_1V5

R2058 2.2K 5% 1/16W MF-LF 402

NB_CFG<18> VCC Select	High = 1.5V Low = 1.05V

14C6 NB_CFG<18>

Internal pull-down

=PP3V3_S0_NB 14C7 14D6 19C7 20A4 20B4 64A6

NBCFG_DMI_REVERSE

R2059 2.2K 5% 1/16W MF-LF 402

NB_CFG<19> DMI Lane Reversal	High = Reversed Low = Normal

14C6 NB_CFG<19>

Internal pull-down

=PP3V3_S0_NB 14C7 14D6 19C7 20B4 64A6

NBCFG_SDVO_AND_PCIE

R2060 2.2K 5% 1/16W MF-LF 402

945 External Design Spec says reserved

NB_CFG<20> PCIe Backward Interop. Mode	High = Both active Low = Only SDVO or PCIe x1

14B6 NB_CFG<20>

Internal pull-down

PROBABLY NOT NEEDED

NB Config Straps

SYNC_MASTER=NB SYNC_DATE=06/28/2005

NOTICE OF PROPRIETARY PROPERTY

THE INFORMATION CONTAINED HEREIN IS THE PROPRIETARY PROPERTY OF APPLE COMPUTER, INC. THE POSSESSOR AGREES TO THE FOLLOWING

I TO MAINTAIN THE DOCUMENT IN CONFIDENCE

II NOT TO REPRODUCE OR COPY IT

III NOT TO REVEAL OR PUBLISH IN WHOLE OR PART

APPLE COMPUTER INC.

SIZE	DRAWING NUMBER	REV.
D	051-7374	A
SCALE NONE	SHT 20 OF 79	

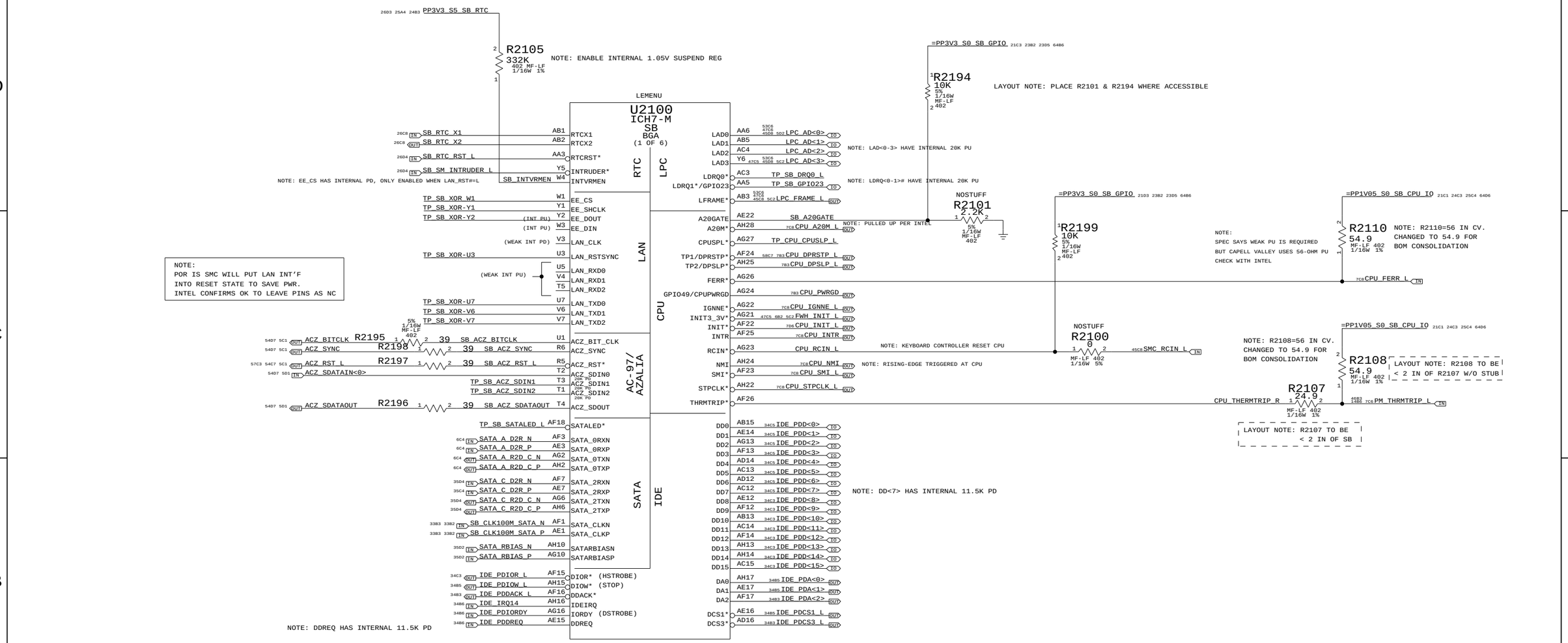

	AC '07	INTEL HIGH DEFINITION AUDIO
ACZ_BIT_CLK	INTERNAL 20K PD ENABLED WHEN - LSO BIT IN AC'97 GLOBAL CONTROL REG = 1; OR - BOTH FUNCTION 2 & 3 OF DEVICE 30 ARE DISABLED	INTERNAL 20K PD ONLY ENABLED IN S3COLD
ACZ_RST#		NONE
ACZ_SDIN[0-2]	INTERNAL 20K PD	INTERNAL 20K PD
ACZ_SDOUT	INTERNAL 20K PD ENABLED DURING RESET AND WHEN - LSO BIT IN AC'97 GLOBAL CONTROL REG = 1; OR - BOTH FUNCTION 2 & 3 OF DEVICE 30 ARE DISABLED	INTERNAL 20K PD ENABLED WHEN - LSO BIT IN AC'97 GLOBAL CONTROL REG = 1; OR - BOTH FUNCTION 2 & 3 OF DEVICE 30 ARE DISABLED
ACZ_SYNC		INTERNAL 20K PD

SB: 1 OF 4

NOTICE OF PROPRIETARY PROPERTY

THE INFORMATION CONTAINED HEREIN IS THE PROPRIETARY PROPERTY OF APPLE COMPUTER, INC. THE POSSESSOR AGREES TO THE FOLLOWING

I TO MAINTAIN THE DOCUMENT IN CONFIDENCE

II NOT TO REPRODUCE OR COPY IT

III NOT TO REVEAL OR PUBLISH IN WHOLE OR PART

APPLE COMPUTER INC.

SIZE	DRAWING NUMBER	REV.
D	051-7374	A
SCALE NONE	SHT 21 OF 79	

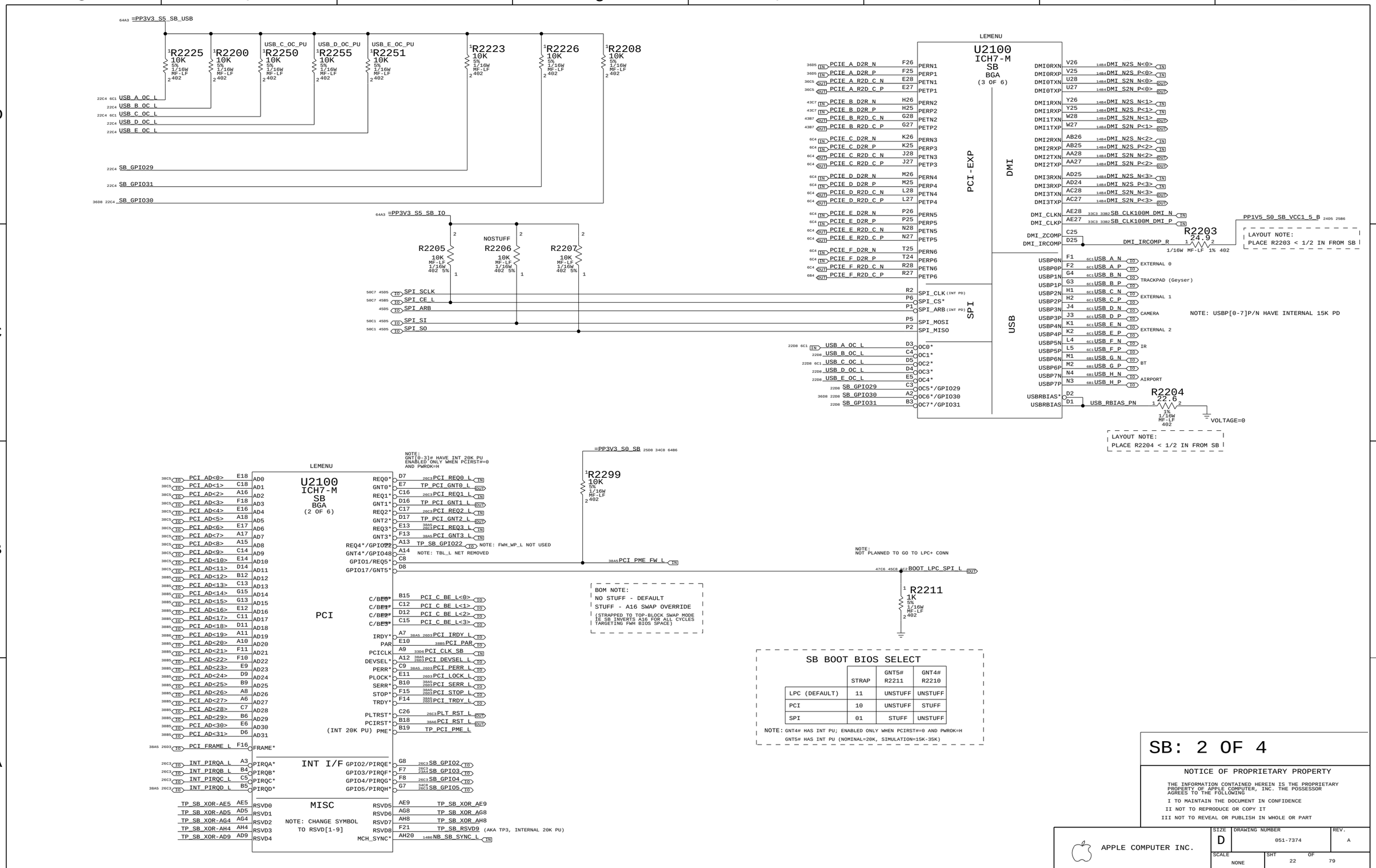

SB BOOT BIOS SELECT

	STRAP	GNT5# R2211	GNT4# R2210
LPC (DEFAULT)	11	UNSTUFF	UNSTUFF
PCI	10	UNSTUFF	STUFF
SPI	01	STUFF	UNSTUFF

NOTE: GNT4# HAS INT PU; ENABLED ONLY WHEN PCIRST#=0 AND PWROK=H
GNT5# HAS INT PU (NOMINAL=20K, SIMULATION=15K-35K)

SB: 2 OF 4

NOTICE OF PROPRIETARY PROPERTY

THE INFORMATION CONTAINED HEREIN IS THE PROPRIETARY PROPERTY OF APPLE COMPUTER, INC. THE POSSESSOR AGREES TO THE FOLLOWING

I TO MAINTAIN THE DOCUMENT IN CONFIDENCE
II NOT TO REPRODUCE OR COPY IT
III NOT TO REVEAL OR PUBLISH IN WHOLE OR PART

APPLE COMPUTER INC.

SIZE	DRAWING NUMBER	REV.
D	051-7374	A

SCALE NONE | SHT 22 OF 79

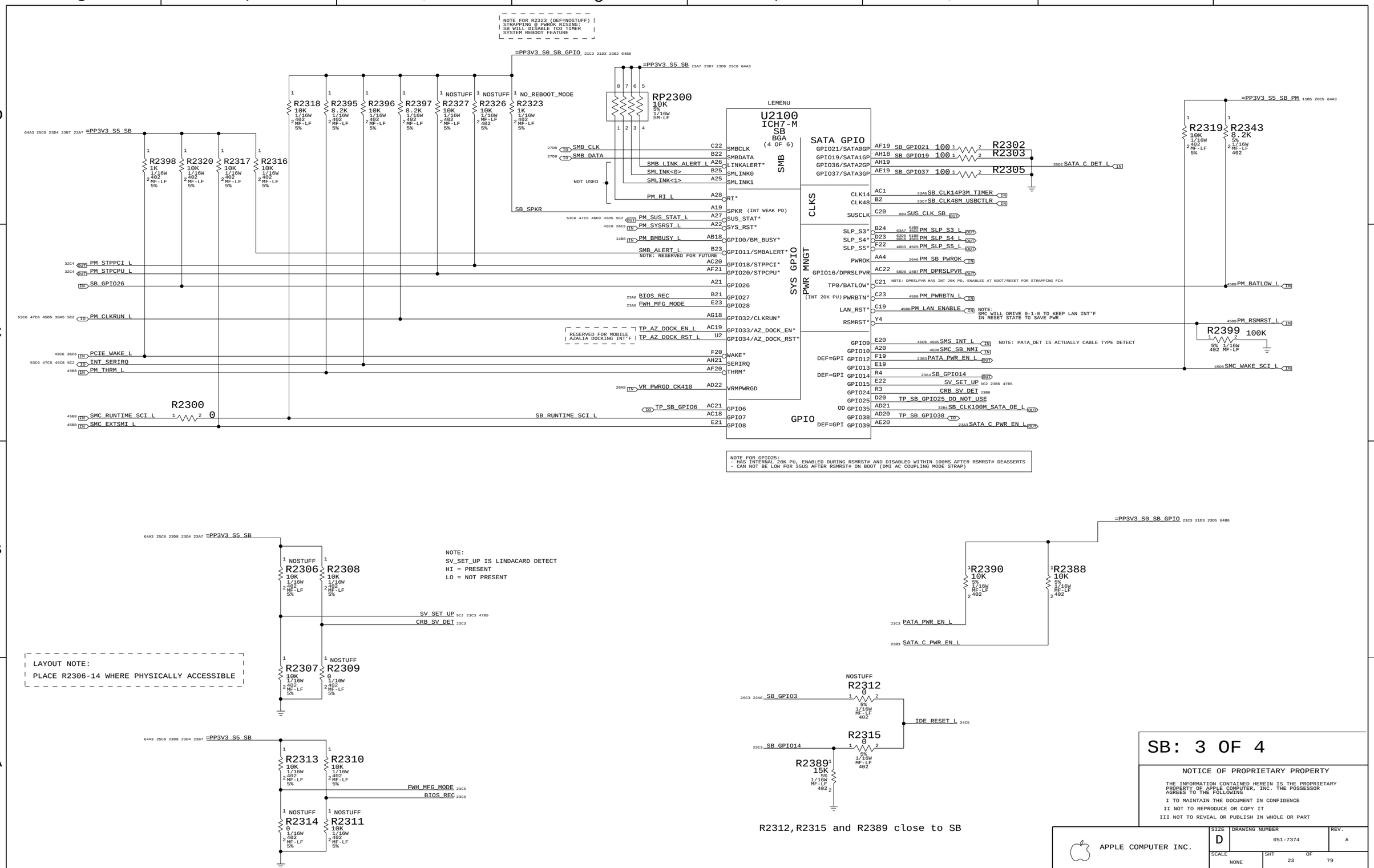

SB: 3 OF 4

NOTICE OF PROPRIETARY PROPERTY

THE INFORMATION CONTAINED HEREIN IS THE PROPRIETARY PROPERTY OF APPLE COMPUTER, INC. THE POSSESSOR AGREES TO THE FOLLOWING

I TO MAINTAIN THE DOCUMENT IN CONFIDENCE

II NOT TO REPRODUCE OR COPY IT

III NOT TO REVEAL OR PUBLISH IN WHOLE OR PART

APPLE COMPUTER INC.

SIZE	DRAWING NUMBER	REV.
D	051-7374	A

SCALE NONE | SHT 23 OF 79

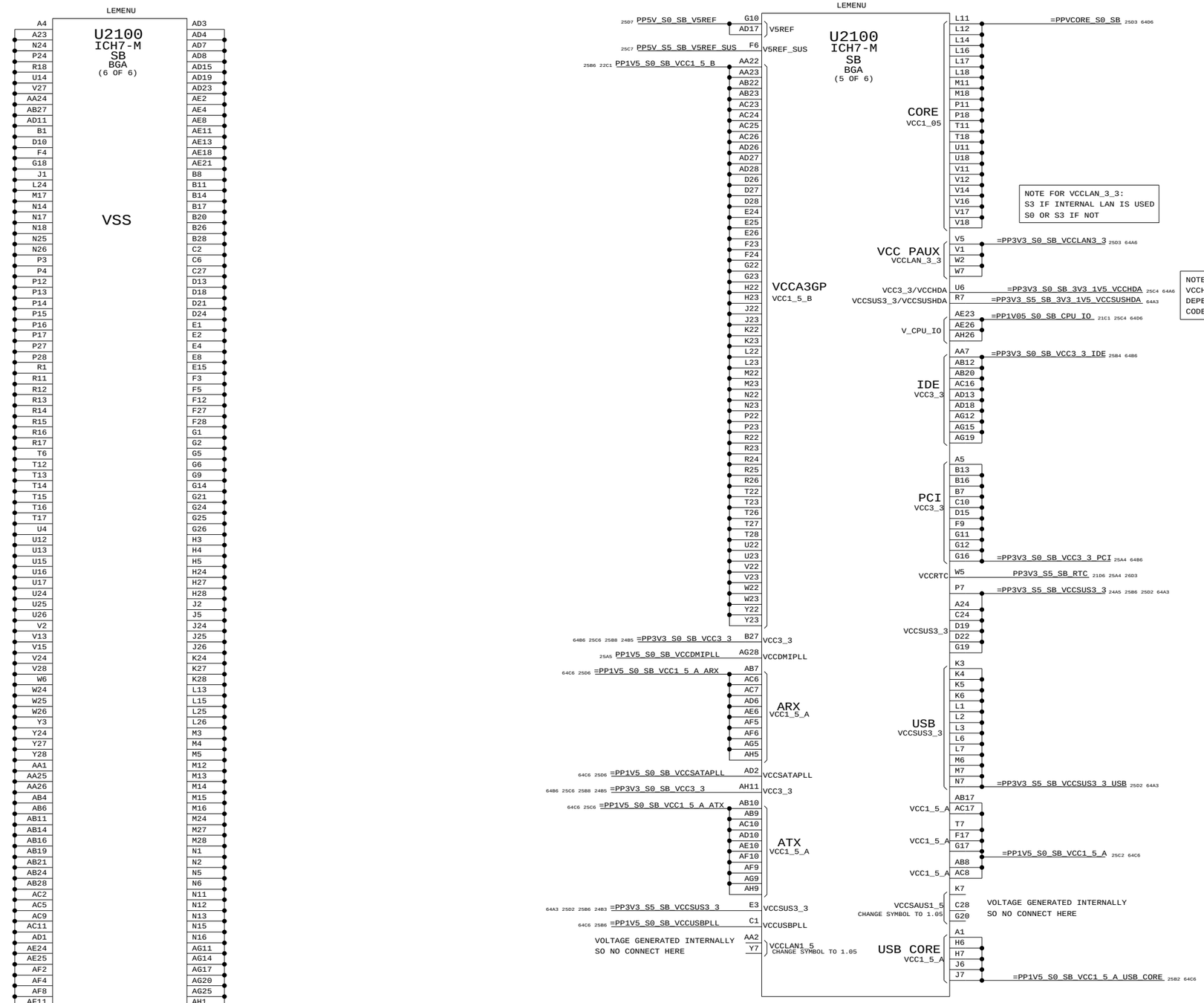

SB: 4 OF 4

NOTICE OF PROPRIETARY PROPERTY

THE INFORMATION CONTAINED HEREIN IS THE PROPRIETARY PROPERTY OF APPLE COMPUTER, INC. THE POSSESSOR AGREES TO THE FOLLOWING

I TO MAINTAIN THE DOCUMENT IN CONFIDENCE

II NOT TO REPRODUCE OR COPY IT

III NOT TO REVEAL OR PUBLISH IN WHOLE OR PART

APPLE COMPUTER INC.

SIZE	DRAWING NUMBER	REV.
D	051-7374	A
SCALE NONE	SHT 24 OF 79	

64B6 34C8 22B5 =PP3V3_S0_SB
64D3 =PP5V_S0_SB
R2502 100 1/16W MF-LF 402 5%
D2502 BAT54DW SOT-363
ICH V5REF BYPASS
(ICH REFERENCE FOR 5V TOLERANCE ON CORE WELL INPUT)
PP5V_S0_SB_V5REF 24D5
VOLTAGE=5V
MIN_LINE_WIDTH=0.3MM
MIN_NECK_WIDTH=0.25MM
C2503 0.1UF 10% 16V X5R 402
PLACEMENT NOTE:
PLACE C2503 < 2.54MM OF PIN AD17 OF SB
ON SECONDARY SIDE OR 3.56MM ON PRIMARY

64A3 23D8 23D4 23B7 23A7 =PP3V3_S5_SB
64A3 =PP5V_S5_SB
R2501 10 1/16W MF-LF 402 5%
D2502 BAT54DW SOT-363
ICH V5REF_SUS BYPASS
(ICH REFERENCE FOR 5V TOLERANCE ON RESUME WELL LOGIC)
PP5V_S5_SB_V5REF_SUS 24D5
VOLTAGE=5V
MIN_LINE_WIDTH=0.3MM
MIN_NECK_WIDTH=0.25MM
C2504 0.1UF 10% 16V X5R 402
PLACEMENT NOTE:
PLACE C2504 < 2.54MM OF PIN F6 OF SB
ON SECONDARY SIDE OR 3.56MM ON PRIMARY

25A8 64C6 =PP1V5_S0_SB
L2500 100-OHM-EMI SM-3
ICH VCCA3GP(VCC1_5_B BYPASS
(ICH IO,LOGIC 1.5V PWR)
PP1V5_S0_SB_VCC1_5_B 22C1 24D5
VOLTAGE=1.5V
MIN_LINE_WIDTH=0.5MM
MIN_NECK_WIDTH=0.25MM
CRITICAL
C2500 220UF 20% 2.5V POLY SMB2
C2505 0.1UF 10% 16V X5R 402
C2506 0.1UF 10% 16V X5R 402
C2507 0.1UF 10% 16V X5R 402
PLACEMENT NOTE:
PLACE C2500 & C2505-07 < 2.54MM OF SB
ON SECONDARY SIDE OR 3.56MM ON PRIMARY
NEAR PINS D28, T28, AD28

ICH VCC3_3 BYPASS
(ICH IO BUFFER 3.3V PWR)
64B6 25C6 24B5 =PP3V3_S0_SB_VCC3_3
C2509 0.1UF 10% 16V X5R 402
PLACEMENT NOTE:
PLACE C2509 NEAR PIN B27 OF SB

64C6 25C8 =PP1V5_S0_SB
R2500 1 1/10W 5% MF-LF 603
PP1V5_S0_SB_VCCDMIPLL_F
VOLTAGE=1.5V
MIN_LINE_WIDTH=0.5MM
MIN_NECK_WIDTH=0.25MM
L2507 0.28-OHM 1206
PLACEMENT NOTE:
PLACE < 2.54MM OF SB ON
SECONDARY SIDE OR 3.56MM ON PRIMARY

ICH VCC1_5_A/ARX BYPASS
(ICH LOGIC&IO[ARX] 1.5V PWR)
64C6 24B5 =PP1V5_S0_SB_VCC1_5_A_ARX
C2511 0.1UF 10% 16V X5R 402
PLACEMENT NOTE:
PLACE < 2.54MM OF SB ON SECONDARY OR
3.56MM ON PRIMARY NEAR PIN AG5

ICH VCCSATAPLL BYPASS
(ICH SATA PLL 1.5V PWR)
64C6 24B5 =PP1V5_S0_SB_VCCSATAPLL
C2517 0.1UF 10% 16V X5R 402
PLACEMENT NOTE:
PLACE < 2.54MM OF SB ON SECONDARY OR
3.56MM ON PRIMARY NEAR PIN AD2

ICH VCC3_3 BYPASS
(ICH IO BUFFER 3.3V PWR)
64B6 25B8 24B5 =PP3V3_S0_SB_VCC3_3
C2513 0.1UF 10% 16V X5R 402
PLACEMENT NOTE:
PLACE < 2.54MM OF SB ON SECONDARY OR
3.56MM ON PRIMARY NEAR PIN AH11

ICH VCC1_5_A/ATX BYPASS
(ICH LOGIC&IO[ATX] 1.5V PWR)
64C6 24A5 =PP1V5_S0_SB_VCC1_5_A_ATX
C2514 1UF 10% 6.3V CERM 402
PLACEMENT NOTE:
PLACE < 2.54MM OF SB ON SECONDARY OR
3.56MM ON PRIMARY NEAR PIN AG9

ICH VCCSUS3_3 BYPASS
(ICH SUSPEND 3.3V PWR)
64A3 25D2 24B3 24A5 =PP3V3_S5_SB_VCCSUS3_3
C2520 0.1UF 10% 16V X5R 402
PLACEMENT NOTE:
PLACE C2520 NEAR PIN E3 OF SB

ICH VCCUSBPLL BYPASS
(ICH USB PLL 1.5V PWR)
64C6 24A5 =PP1V5_S0_SB_VCCUSBPLL
C2515 0.1UF 10% 16V X5R 402
PLACEMENT NOTE:
PLACE C2520 NEAR PIN C1 OF SB

ICH VCCDMIPLL BYPASS
(ICH DMI PLL 1.5V PWR)
PP1V5_S0_SB_VCCDMIPLL 24B5
VOLTAGE=1.5V
MIN_LINE_WIDTH=0.5MM
MIN_NECK_WIDTH=0.25MM
C2501 0.01UF 10% 16V CERM 402
C2508 10UF 20% 6.3V X5R 603

PLACEMENT NOTE:
PLACE CAPS AT EDGE OF SB

ICH CORE/VCC1_05 BYPASS
(ICH CORE 1.05V PWR)
=PPVCORE_S0_SB 24D3 64D6
C2518 0.1UF 10% 16V X5R 402
C2502 1UF 10% 6.3V CERM 402
CRITICAL
C2516 330UF 20% 2.5V POLY CASE-C2
PLACEHOLDER FOR 270UF

ICH VCC_PAUX/VCCLAN3_3 BYPASS
(ICH LAN I/F BUFFER 3.3V PWR)
=PP3V3_S0_SB_VCCLAN3_3 24D3 64A6
PLACEMENT NOTE:
PLACE CAP UNDER SB NEAR PINS V1,
V5, W2, OR W7
C2519 0.1UF 10% 16V X5R 402

ICH VCC3_3/VCCHDA BYPASS
(ICH INTEL HDA CORE 3.3V PWR)
64A6 24C3 =PP3V3_S0_SB_3V3_1V5_VCCHDA
PLACEMENT NOTE:
PLACE < 2.54MM OF SB ON SECONDARY OR
3.56MM ON PRIMARY NEAR PIN U6
C2521 0.1UF 10% 16V X5R 402

ICH V_CPU_IO BYPASS
(ICH CPU I/O 1.05V PWR)
64D6 24C3 21C1 =PP1V05_S0_SB_CPU_IO
PLACEMENT NOTE:
PLACE NEAR PINS AE23, AE26 & AH26 OF SB
C2523 0.1UF 10% 16V X5R 402
C2522 0.1UF 10% 16V X5R 402
C2524 4.7UF 20% 6.3V CERM 603

ICH IDE/VCC3_3 BYPASS
(ICH IDE I/O 3.3V PWR)
64B6 24C3 =PP3V3_S0_SB_VCC3_3_IDE
PLACEMENT NOTE:
PLACE < 2.54MM OF SB ON SECONDARY OR
3.56MM ON PRIMARY NEAR PINS AA7 ... AG19
C2525 0.1UF 10% 16V X5R 402

ICH PCI/VCC3_3 BYPASS
(ICH PCI I/O 3.3V PWR)
64B6 24B3 =PP3V3_S0_SB_VCC3_3_PCI
PLACEMENT NOTE:
DISTRIBUTE IN PCI SECTION OF SB
NEAR PINS A5 ... G16
C2526 0.1UF 10% 16V X5R 402
C2527 0.1UF 10% 16V X5R 402
C2528 0.1UF 10% 16V X5R 402

ICH VCCRTC BYPASS
(ICH RTC 3.3V PWR)
26D3 24B3 21D6 =PP3V3_S5_SB_RTC
PLACEMENT NOTE:
PLACE CAPS NEAR PIN W5 OF SB
C2530 0.1UF 10% 16V X5R 402
C2529 0.1UF 10% 16V X5R 402

ICH VCCSUS3_3 BYPASS
(ICH SUSPEND 3.3V PWR)
64A3 25B6 24B3 24A5 =PP3V3_S5_SB_VCCSUS3_3
PLACEMENT NOTE:
PLACE CAPS NEAR PINS
A24 ... G19 AND P7 OF SB
C2531 0.1UF 10% 16V X5R 402
C2534 0.1UF 10% 16V X5R 402

ICH USB/VCCSUS3_3 BYPASS
(ICH SUSPEND USB 3.3V PWR)
64A3 24B3 =PP3V3_S5_SB_VCCSUS3_3_USB
PLACEMENT NOTE:
PLACE CAPS NEAR PINS
K3 ... N7 OF SB
C2533 0.1UF 10% 16V X5R 402
C2532 0.1UF 10% 16V X5R 402

ICH VCC1_5A BYPASS
(ICH LOGIC&IO 1.5V PWR)
64C6 24A3 =PP1V5_S0_SB_VCC1_5_A
PLACEMENT NOTE:
PLACE CAPS NEAR PINS
AB8 AND AC8 OF SB
C2510 0.1UF 10% 16V X5R 402

ICH USB CORE/VCC1_5_A BYPASS
(ICH USB CORE 1.5V PWR)
64C6 24A3 =PP1V5_S0_SB_VCC1_5_A_USB_CORE
PLACEMENT NOTE:
PLACE < 2.54MM OF SB ON SECONDARY OR
3.56MM ON PRIMARY NEAR PINS A1 ... J7
C2512 0.1UF 10% 16V X5R 402

SB: 4 OF 4

NOTICE OF PROPRIETARY PROPERTY

THE INFORMATION CONTAINED HEREIN IS THE PROPRIETARY PROPERTY OF APPLE COMPUTER, INC. THE POSSESSOR AGREES TO THE FOLLOWING

I TO MAINTAIN THE DOCUMENT IN CONFIDENCE
II NOT TO REPRODUCE OR COPY IT
III NOT TO REVEAL OR PUBLISH IN WHOLE OR PART

APPLE COMPUTER INC.

SIZE	DRAWING NUMBER	REV.
D	051-7374	A
SCALE NONE	SHT 25 OF 79	

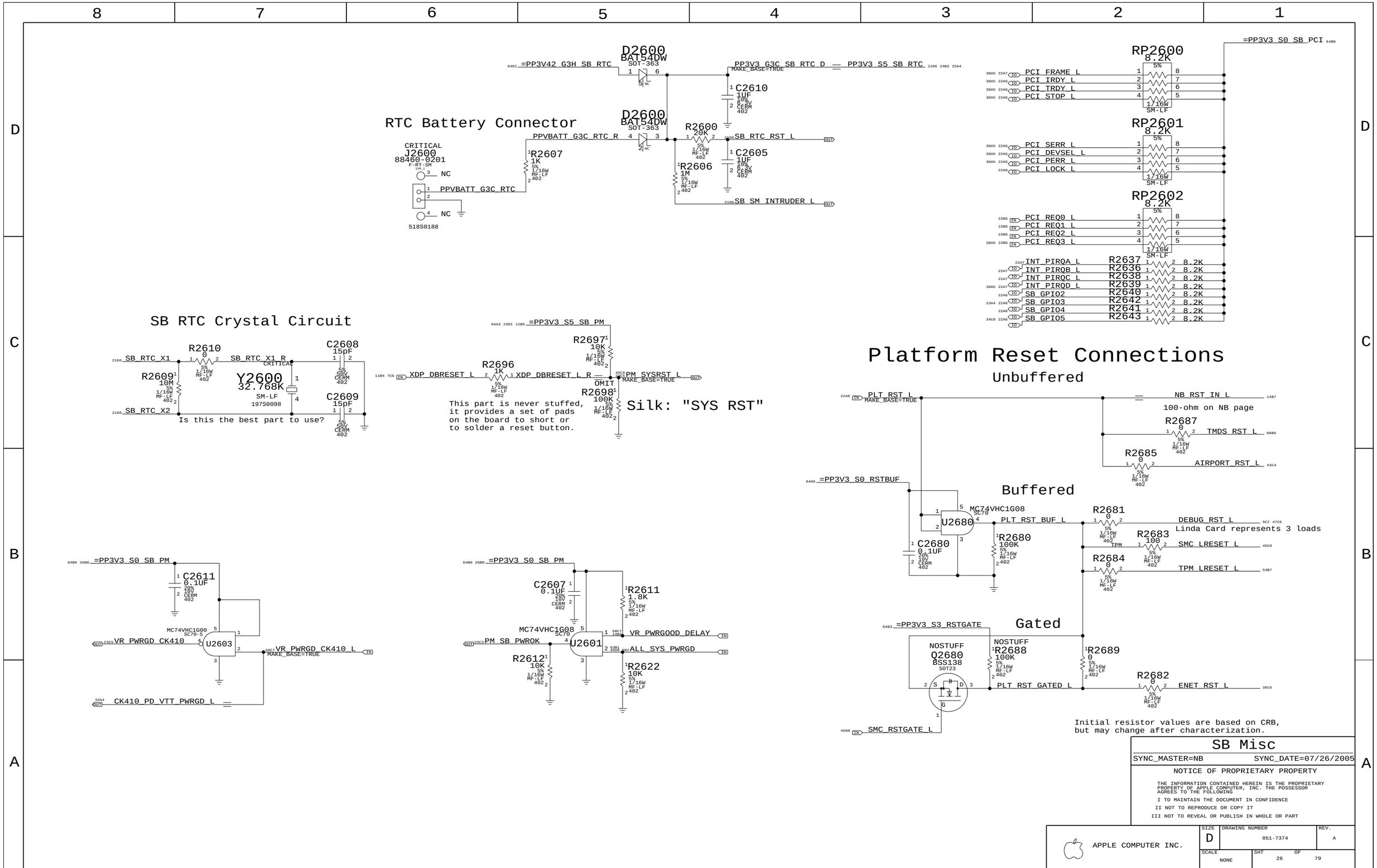

SB Misc

SYNC_MASTER=NB SYNC_DATE=07/26/2005

NOTICE OF PROPRIETARY PROPERTY

THE INFORMATION CONTAINED HEREIN IS THE PROPRIETARY PROPERTY OF APPLE COMPUTER, INC. THE POSSESSOR AGREES TO THE FOLLOWING

I TO MAINTAIN THE DOCUMENT IN CONFIDENCE

II NOT TO REPRODUCE OR COPY IT

III NOT TO REVEAL OR PUBLISH IN WHOLE OR PART

APPLE COMPUTER INC.

SIZE	DRAWING NUMBER	REV.
D	051-7374	A
SCALE NONE	SHT 26 OF 79	

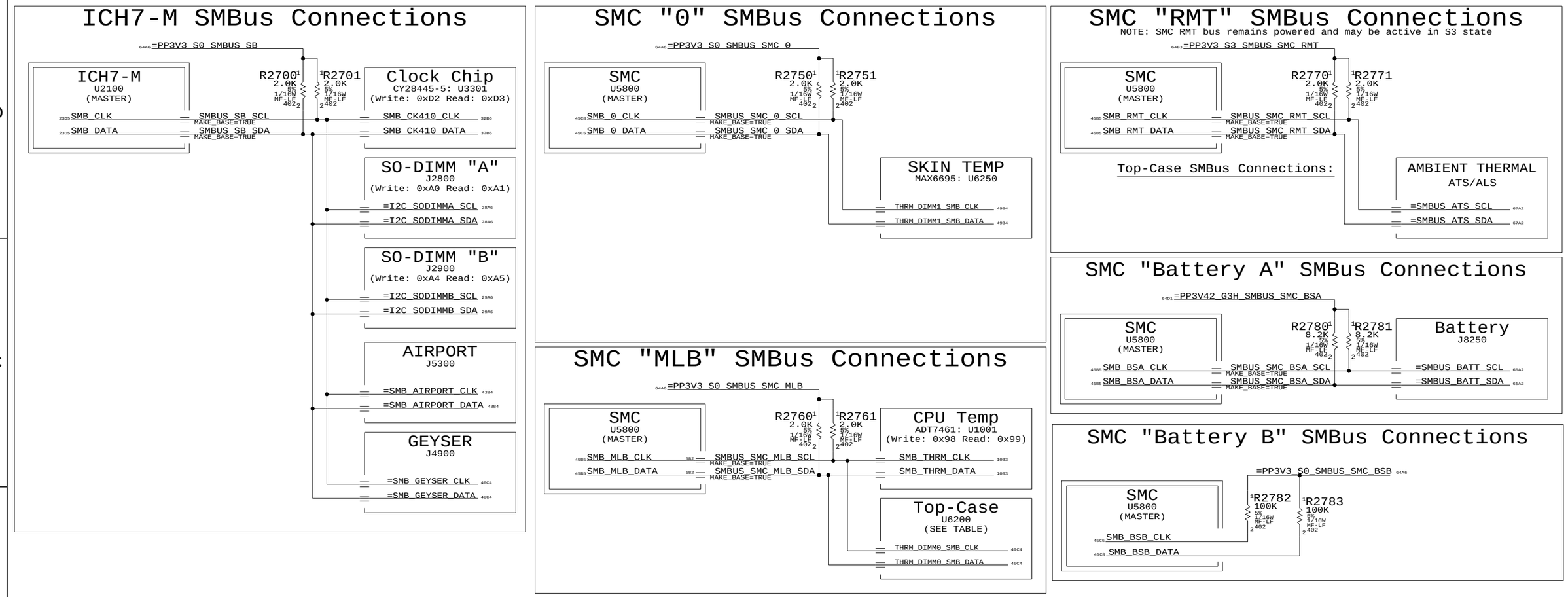

M42 SMBUS CONNECTIONS

SYNC_MASTER=ENET SYNC_DATE=08/30/2005

NOTICE OF PROPRIETARY PROPERTY

THE INFORMATION CONTAINED HEREIN IS THE PROPRIETARY PROPERTY OF APPLE COMPUTER, INC. THE POSSESSOR AGREES TO THE FOLLOWING

I TO MAINTAIN THE DOCUMENT IN CONFIDENCE

II NOT TO REPRODUCE OR COPY IT

III NOT TO REVEAL OR PUBLISH IN WHOLE OR PART

APPLE COMPUTER INC.

SIZE	DRAWING NUMBER	REV.
D	051-7374	A
SCALE NONE	SHT 27 OF 79	

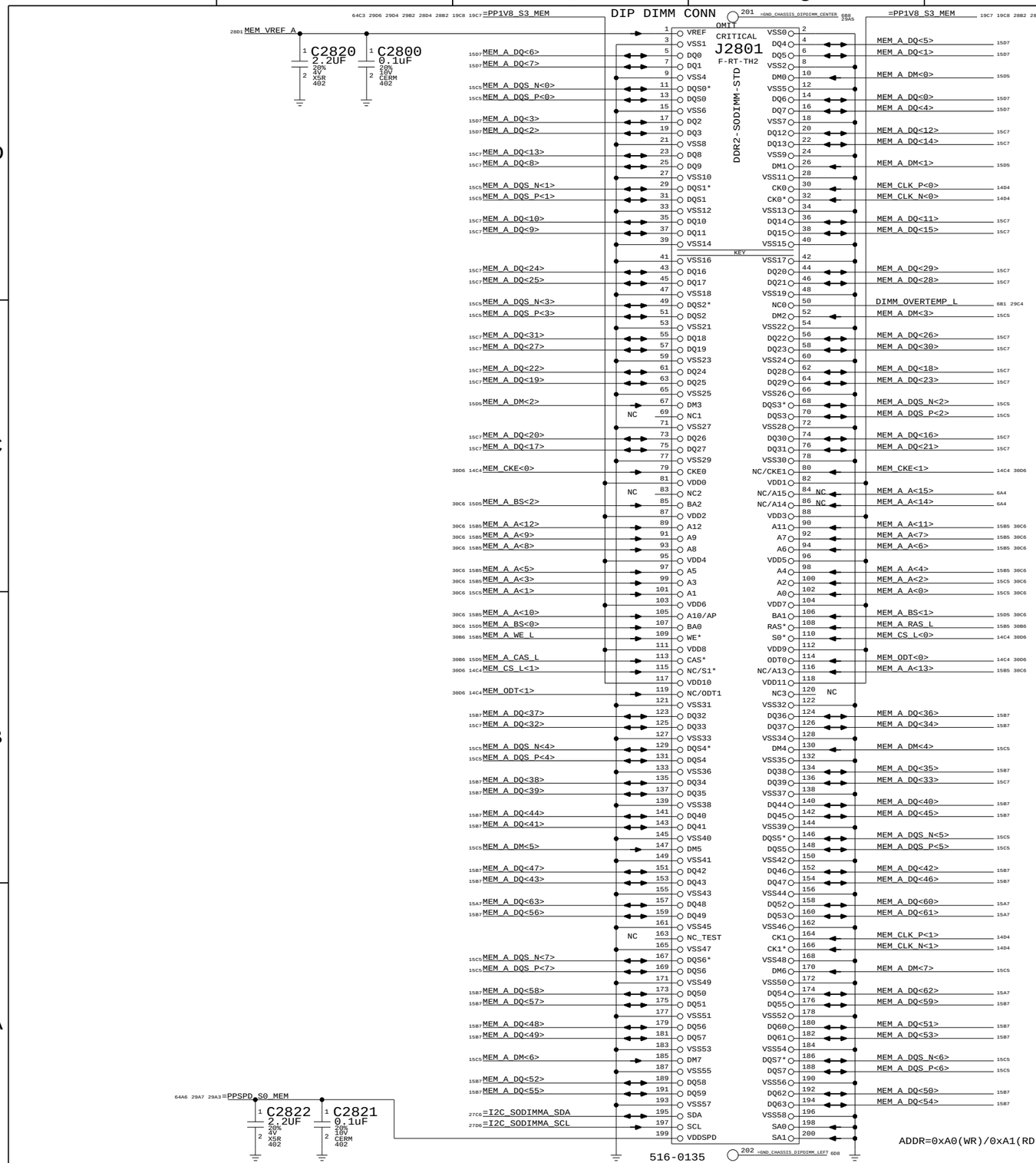

DDR2 VRef

One 0.1uF per connector

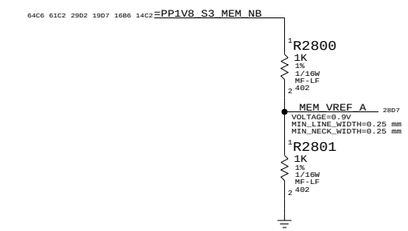

Yellow uses 10K divider and TLV2463
to drive MCH and DIMM connectors.
(See Capell Valley pg 47)

Page Notes

Power aliases required by this page:
- =PP1V8_S3_MEM
- =PPSPD_S0_MEM (2.5V - 3.3V)

Signal aliases required by this page:
- =I2C_MEM_SCL
- =I2C_MEM_SDA

BOM options provided by this page:
(NONE)

DDR2 Bypass Caps

(For return current)

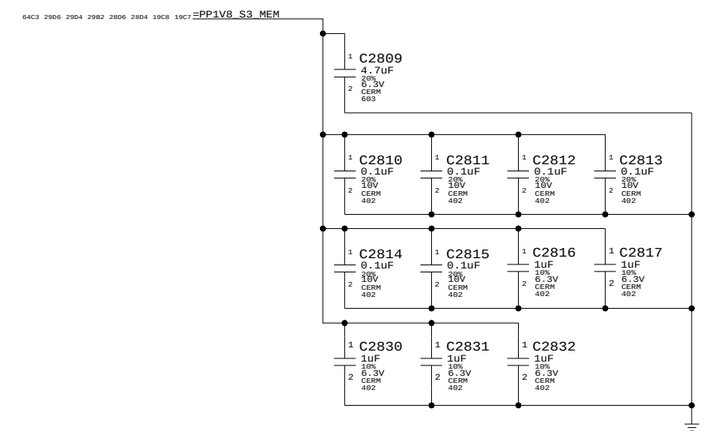

The 4.7uF and 1.0uF caps can be changed to 5x 2.2uF caps,
when they get cheaper.

PART#	QTY	DESCRIPTION	REFERENCE DESIGNATOR(S)	CRITICAL	BOM OPTION
516-0149	1	CONN,200P STD SODIMM OLD REV	J2801	CRITICAL	PVT-DIMM
516-0154	1	CONN,200P STD SODIMM NEW REV 3.5	J2801	CRITICAL	POST-RAMP-DIMM35

DDR2 SO-DIMM Connector A

SYNC_MASTER=MEMORY SYNC_DATE=06/20/2005

NOTICE OF PROPRIETARY PROPERTY

THE INFORMATION CONTAINED HEREIN IS THE PROPRIETARY PROPERTY OF APPLE COMPUTER, INC. THE POSSESSOR AGREES TO THE FOLLOWING

I TO MAINTAIN THE DOCUMENT IN CONFIDENCE
II NOT TO REPRODUCE OR COPY IT
III NOT TO REVEAL OR PUBLISH IN WHOLE OR PART

APPLE COMPUTER INC.

SIZE	DRAWING NUMBER	REV.
D	051-7374	A
SCALE NONE	SHT 28 OF 79	

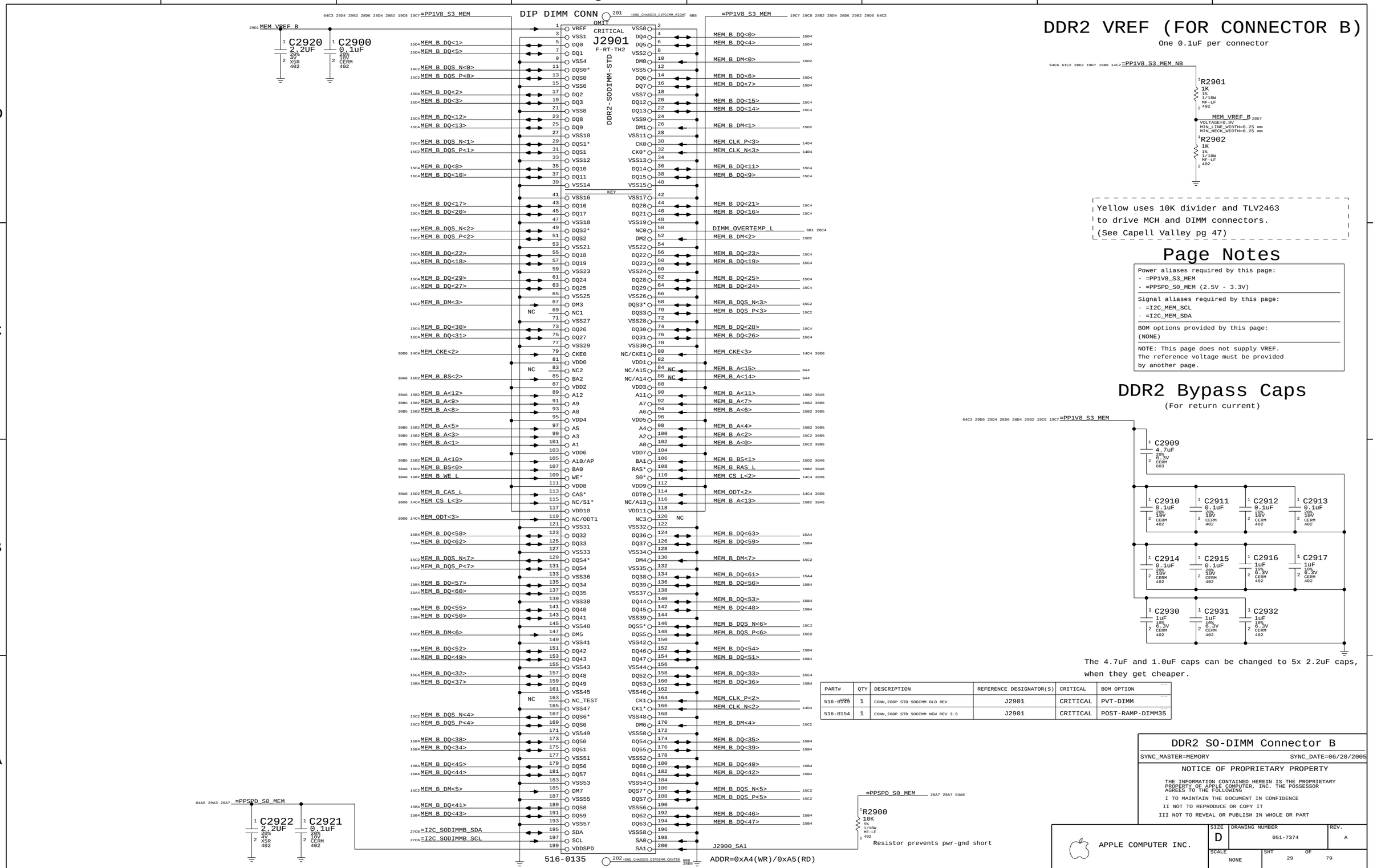

PART#	QTY	DESCRIPTION	REFERENCE DESIGNATOR(S)	CRITICAL	BOM OPTION
516-0149	1	CONN,200P STD SODIMM OLD REV	J2901	CRITICAL	PVT-DIMM
516-0154	1	CONN,200P STD SODIMM NEW REV 3.5	J2901	CRITICAL	POST-RAMP-DIMM35

One cap for each side of every RPAK, one cap for every two discrete resistors
BOMOPTION shown at the top of each group applies to every part below it

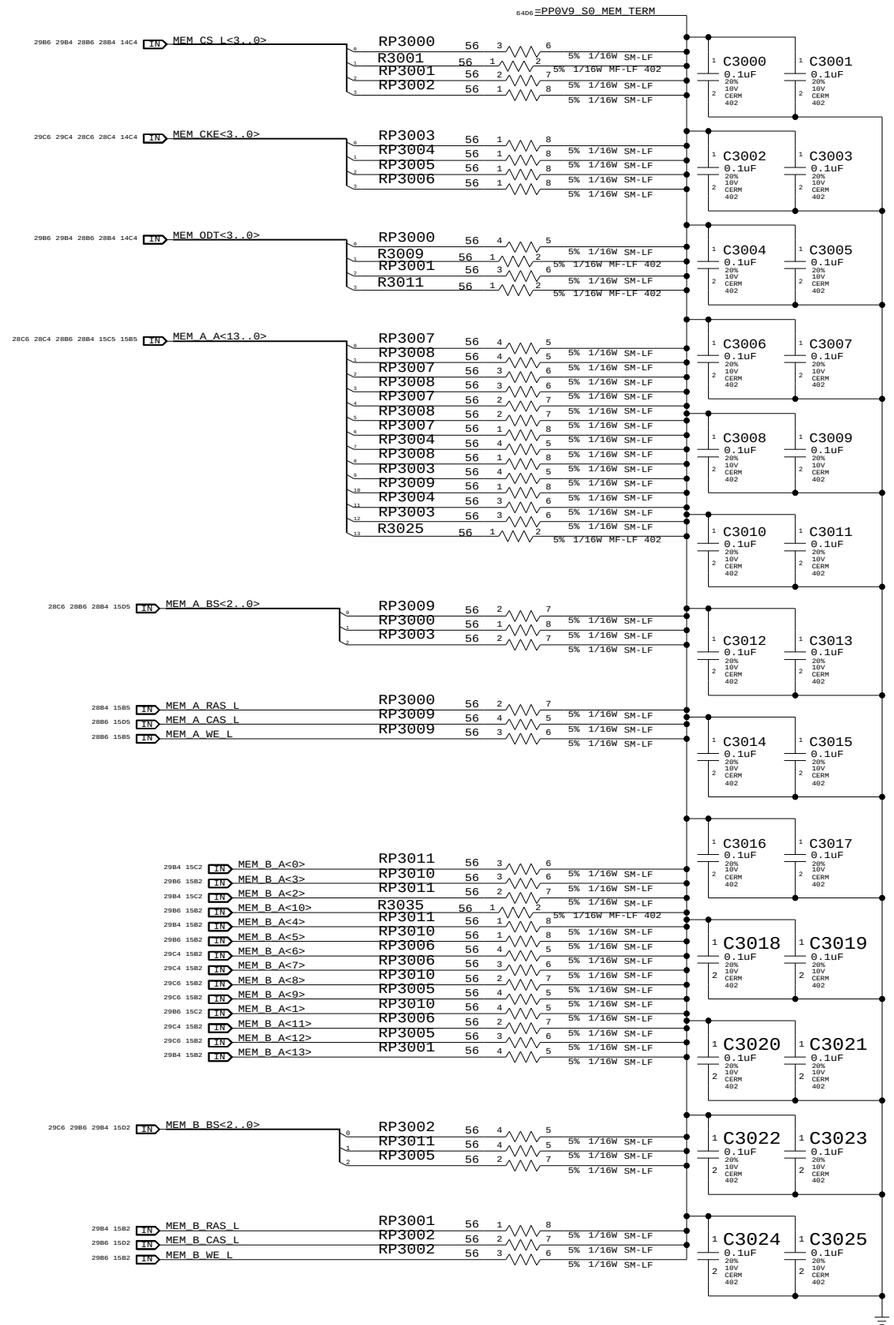

LAYOUT NOTE:PLACE ONE CAP CLOSE TO EVERY TWO PULLUP RESISTORS TERMINATED TO PP0V9_S0_MEM_TERM

Memory Active Termination

NOTICE OF PROPRIETARY PROPERTY

THE INFORMATION CONTAINED HEREIN IS THE PROPRIETARY PROPERTY OF APPLE COMPUTER, INC. THE POSSESSOR AGREES TO THE FOLLOWING

I TO MAINTAIN THE DOCUMENT IN CONFIDENCE

II NOT TO REPRODUCE OR COPY IT

III NOT TO REVEAL OR PUBLISH IN WHOLE OR PART

APPLE COMPUTER INC.

SIZE	DRAWING NUMBER	REV.
D	051-7374	A
SCALE NONE	SHT 30 OF 79	

Page Notes

Power aliases required by this page:
- =PP5V_S0_MEMVTT
- =PP1V8_S0_MEMVTT
- =PP0V9_S0_MEMVTT_LDO

Signal aliases required by this page:
(NONE)

BOM options provided by this page:
(NONE)

DDR2 Vtt Regulator

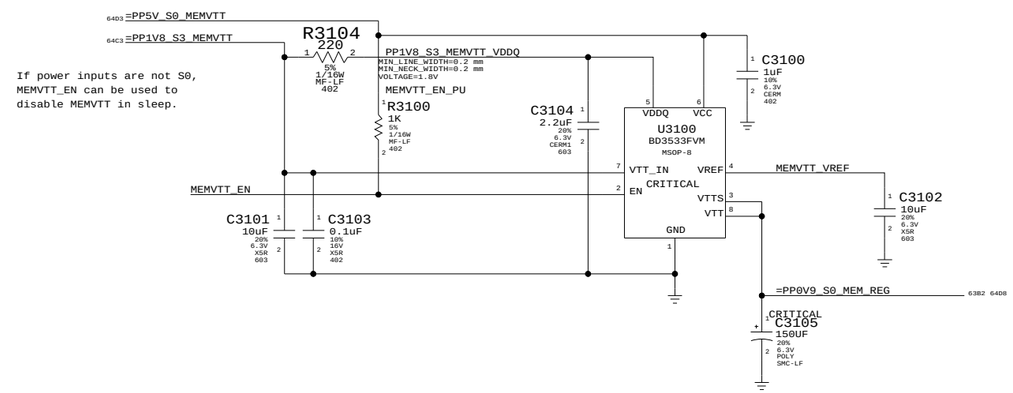

Memory Vtt Supply

SYNC_MASTER=(MASTER) SYNC_DATE=(MASTER)

NOTICE OF PROPRIETARY PROPERTY

THE INFORMATION CONTAINED HEREIN IS THE PROPRIETARY PROPERTY OF APPLE COMPUTER, INC. THE POSSESSOR AGREES TO THE FOLLOWING

I TO MAINTAIN THE DOCUMENT IN CONFIDENCE

II NOT TO REPRODUCE OR COPY IT

III NOT TO REVEAL OR PUBLISH IN WHOLE OR PART

APPLE COMPUTER INC.

SIZE	DRAWING NUMBER	REV.
D	051-7374	A
SCALE NONE	SHT 31 OF 79	

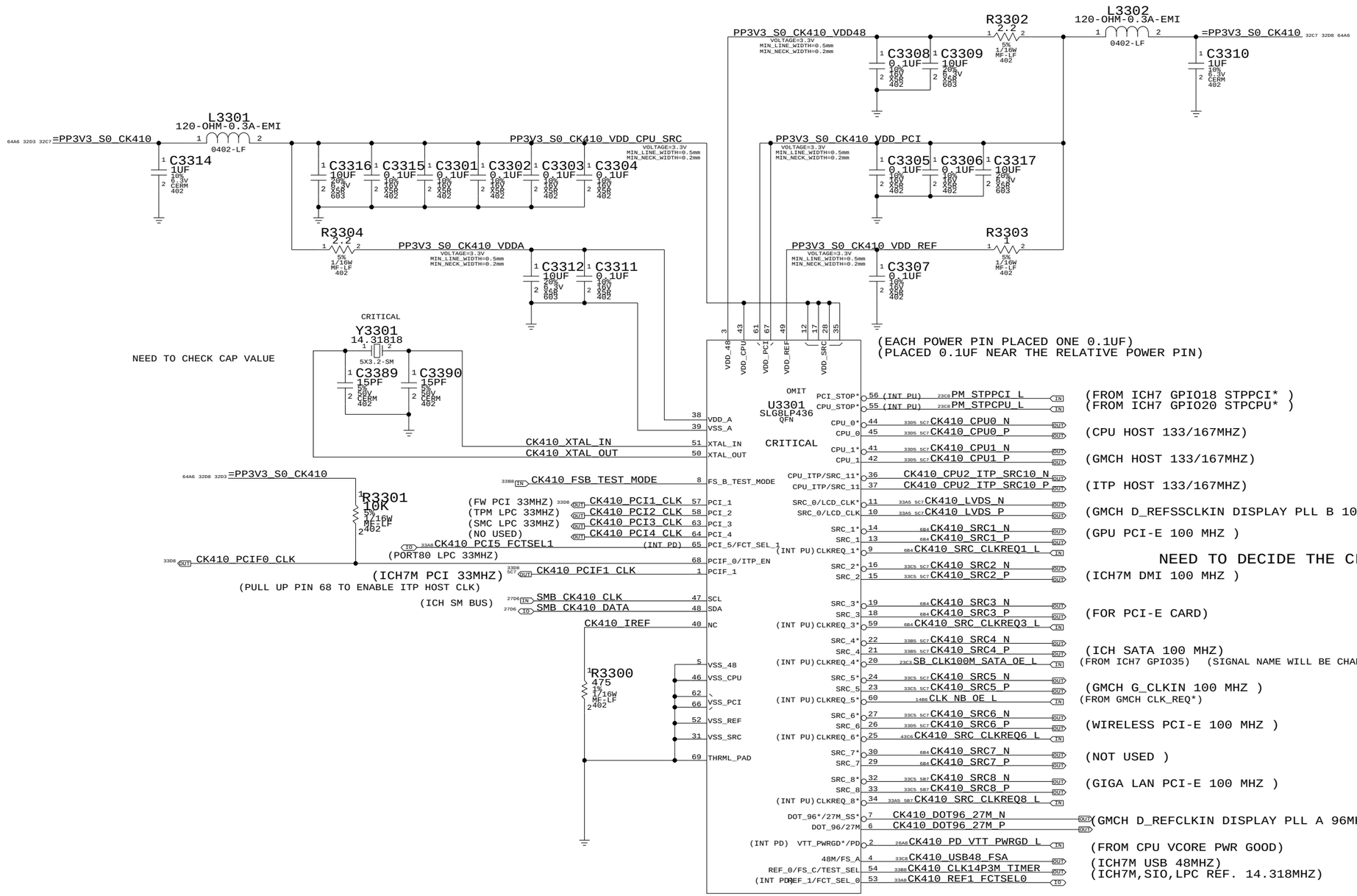

(FROM ICH7 GPIO18 STPPCI*)
(FROM ICH7 GPIO20 STPCPU*)
(CPU HOST 133/167MHZ)
(GMCH HOST 133/167MHZ)
(ITP HOST 133/167MHZ)
(GMCH D_REFSSCLKIN DISPLAY PLL B 100MHZ)
(GPU PCI-E 100 MHZ)

NEED TO DECIDE THE CLKREQ CONNECTION,TO GPIO?

(ICH7M DMI 100 MHZ)
(FOR PCI-E CARD)
(ICH SATA 100 MHZ)
(FROM ICH7 GPIO35) (SIGNAL NAME WILL BE CHANGED POST PROTO TO REMOVE 100M FROM SIGNAL NAME)
(GMCH G_CLKIN 100 MHZ)
(FROM GMCH CLK_REQ*)
(WIRELESS PCI-E 100 MHZ)
(NOT USED)
(GIGA LAN PCI-E 100 MHZ)
(GMCH D_REFCLKIN DISPLAY PLL A 96MHZ)
(FROM CPU VCORE PWR GOOD)
(ICH7M USB 48MHZ)
(ICH7M,SIO,LPC REF. 14.318MHZ)

FCTSEL1	FCTSEL0	PIN 6	PIN 7	PIN 10	PIN 11	
0	0	DOT96T	DOT96C	100MT_SST	100MC_SST	* FOR INT. GRAPHIC SYSTEM
0	1	DOT96T	DOT96C	SRCT0	SRCC0	
1	0	27M NON SPREAD	27M SPREAD	SRCT0	SRCC0	* FOR EXT. GRAPHIC SYSTEM
1	1	OFF LOW	TBD	SRCT0	SRCC0	

CLOCKS

SYNC_MASTER=CLOCK SYNC_DATE=06/03/2005

NOTICE OF PROPRIETARY PROPERTY

THE INFORMATION CONTAINED HEREIN IS THE PROPRIETARY PROPERTY OF APPLE COMPUTER, INC. THE POSSESSOR AGREES TO THE FOLLOWING

I TO MAINTAIN THE DOCUMENT IN CONFIDENCE
II NOT TO REPRODUCE OR COPY IT
III NOT TO REVEAL OR PUBLISH IN WHOLE OR PART

APPLE COMPUTER INC.

SIZE	DRAWING NUMBER	REV.
D	051-7374	A

SCALE NONE SHT 32 OF 79

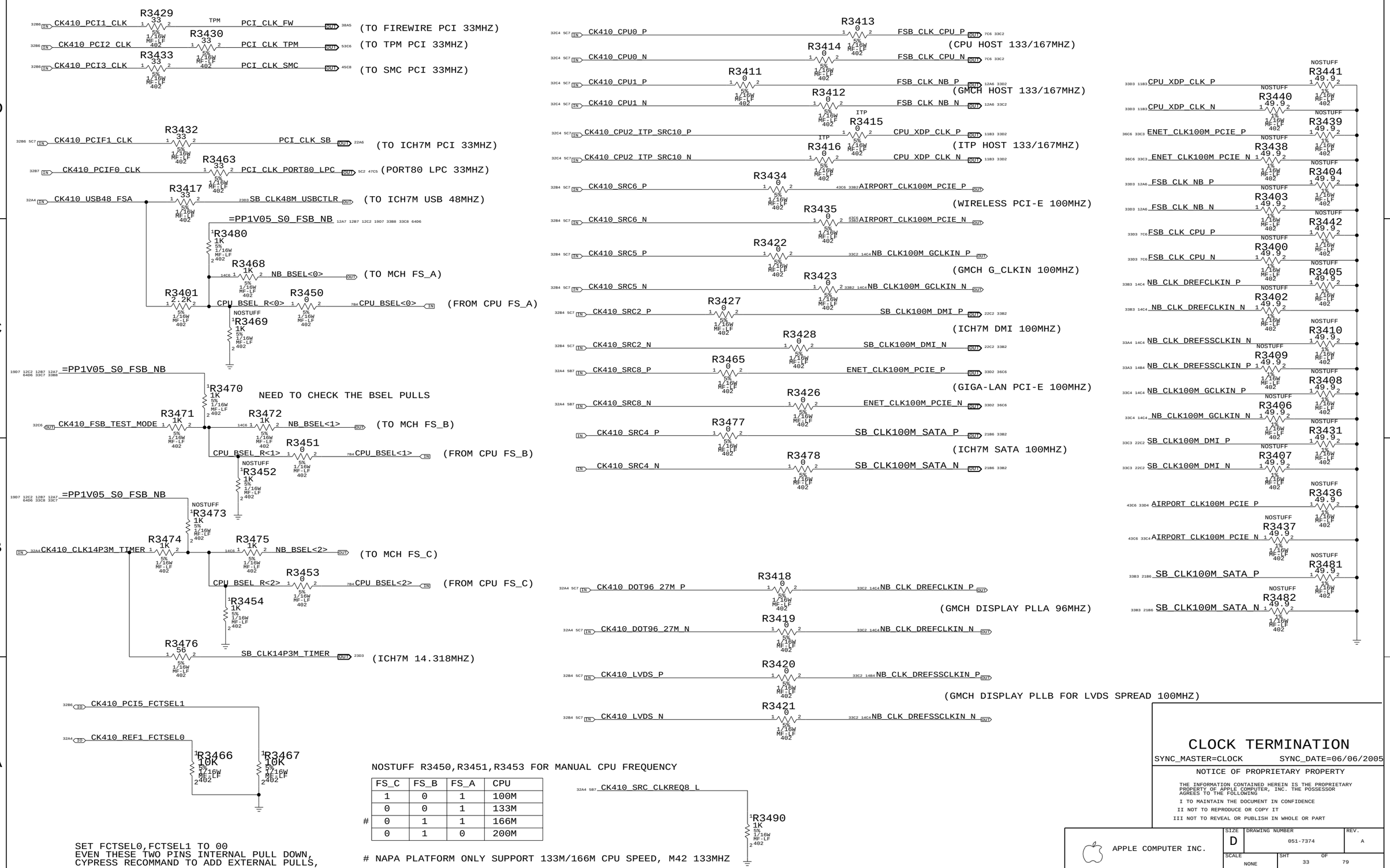

NOSTUFF R3450,R3451,R3453 FOR MANUAL CPU FREQUENCY

	FS_C	FS_B	FS_A	CPU
	1	0	1	100M
	0	0	1	133M
#	0	1	1	166M
	0	1	0	200M

NAPA PLATFORM ONLY SUPPORT 133M/166M CPU SPEED, M42 133MHZ

SET FCTSEL0,FCTSEL1 TO 00
EVEN THESE TWO PINS INTERNAL PULL DOWN,
CYPRESS RECOMMAND TO ADD EXTERNAL PULLS,

CLOCK TERMINATION

SYNC_MASTER=CLOCK SYNC_DATE=06/06/2005

NOTICE OF PROPRIETARY PROPERTY

THE INFORMATION CONTAINED HEREIN IS THE PROPRIETARY PROPERTY OF APPLE COMPUTER, INC. THE POSSESSOR AGREES TO THE FOLLOWING

I TO MAINTAIN THE DOCUMENT IN CONFIDENCE
II NOT TO REPRODUCE OR COPY IT
III NOT TO REVEAL OR PUBLISH IN WHOLE OR PART

APPLE COMPUTER INC.

SIZE	DRAWING NUMBER	REV.
D	051-7374	A
SCALE NONE	SHT 33 OF 79	

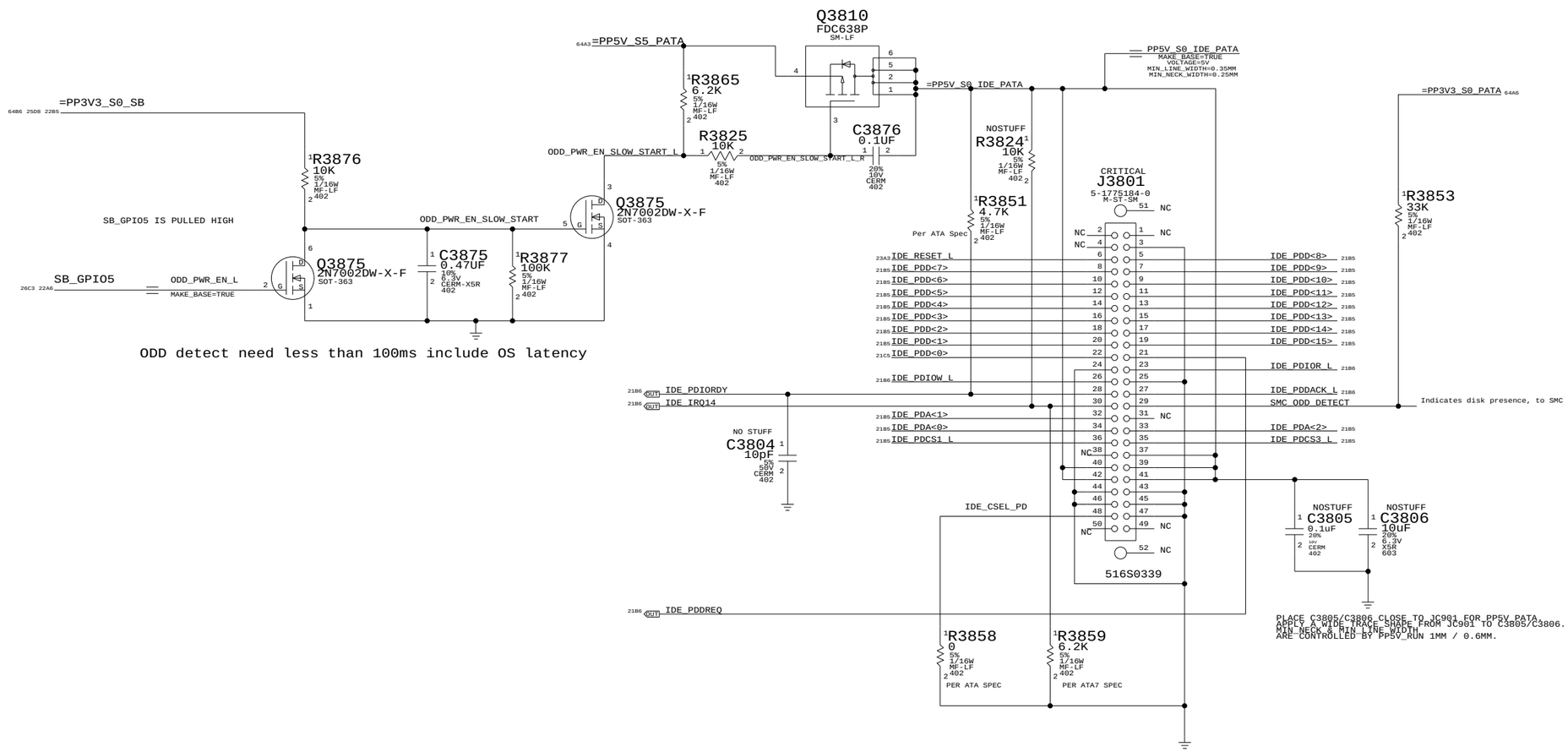

PATA CONNECTOR

NOTICE OF PROPRIETARY PROPERTY

THE INFORMATION CONTAINED HEREIN IS THE PROPRIETARY PROPERTY OF APPLE COMPUTER, INC. THE POSSESSOR AGREES TO THE FOLLOWING

I TO MAINTAIN THE DOCUMENT IN CONFIDENCE

II NOT TO REPRODUCE OR COPY IT

III NOT TO REVEAL OR PUBLISH IN WHOLE OR PART

APPLE COMPUTER INC.

SIZE	DRAWING NUMBER	REV.
D	051-7374	A
SCALE NONE	SHT 34 OF 79	

SATA CONNECTOR

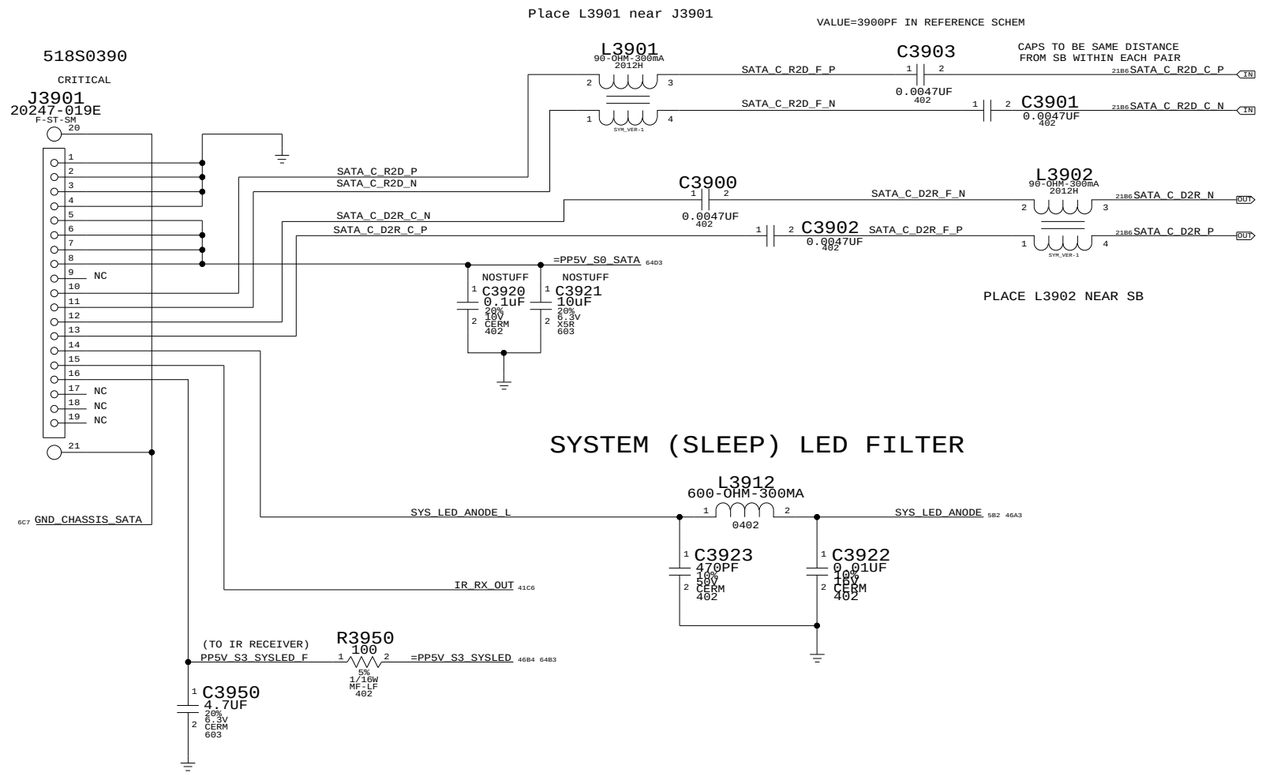

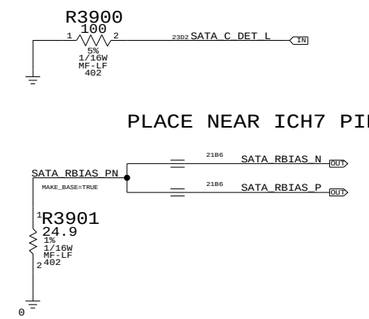

SYSTEM (SLEEP) LED FILTER

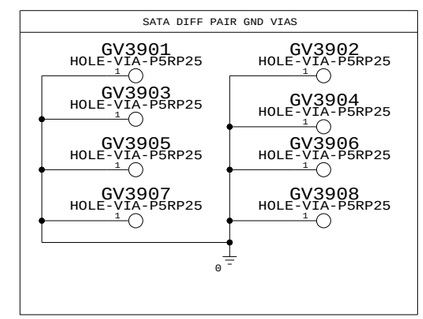

PART NUMBER	ALTERNATE FOR PART NUMBER	BOM OPTION	REF DES	COMMENTS:
155S0227	155S0164	?	L3901,L3902	KEEP MAG.LAYER IN BOM

SATA CONNECTOR

NOTICE OF PROPRIETARY PROPERTY

THE INFORMATION CONTAINED HEREIN IS THE PROPRIETARY PROPERTY OF APPLE COMPUTER, INC. THE POSSESSOR AGREES TO THE FOLLOWING

I TO MAINTAIN THE DOCUMENT IN CONFIDENCE
II NOT TO REPRODUCE OR COPY IT
III NOT TO REVEAL OR PUBLISH IN WHOLE OR PART

APPLE COMPUTER INC.

SIZE	DRAWING NUMBER	REV.
D	051-7374	A
SCALE NONE	SHT 35 OF 79	

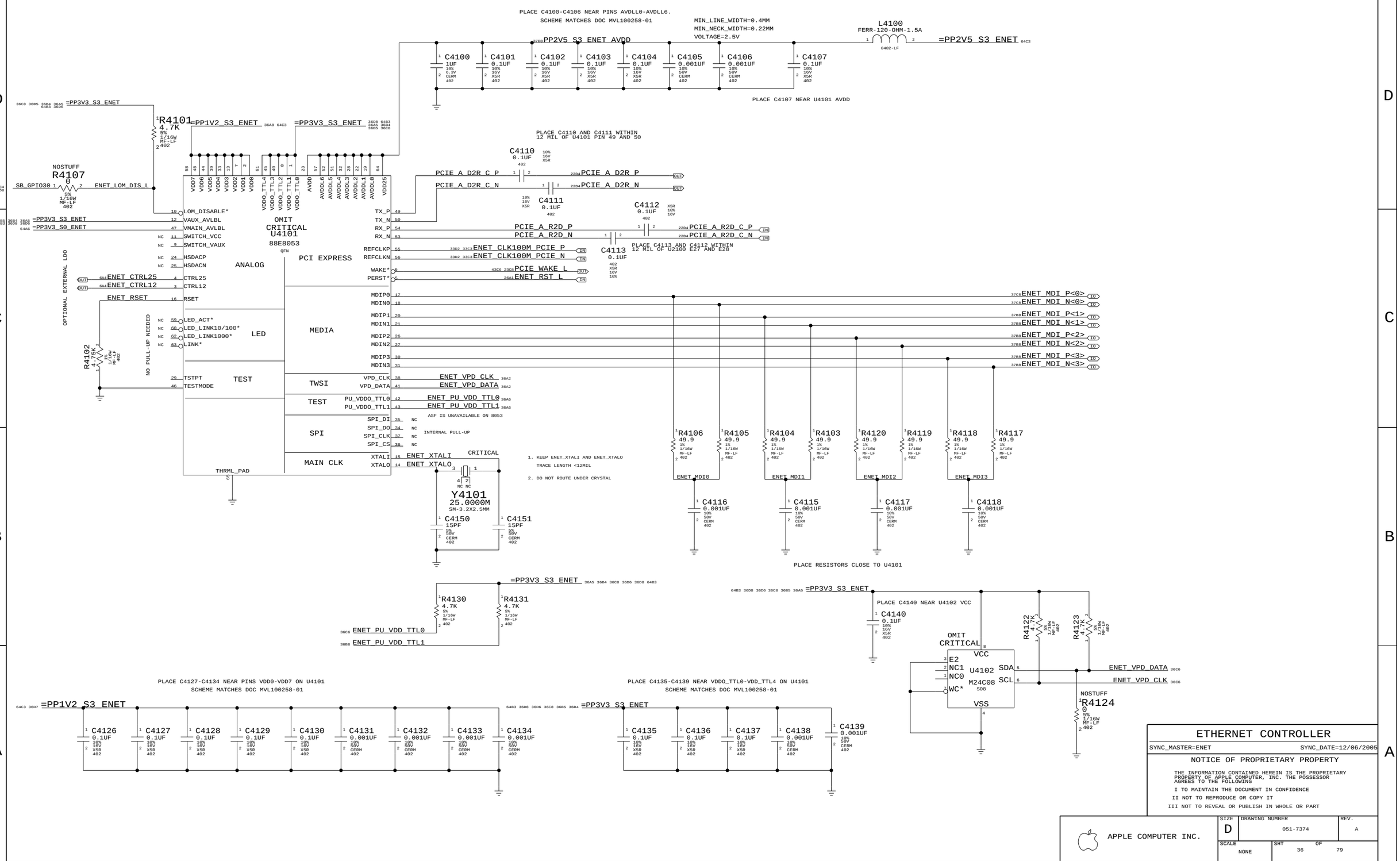

ETHERNET CONTROLLER

SYNC_MASTER=ENET SYNC_DATE=12/06/2005

NOTICE OF PROPRIETARY PROPERTY

THE INFORMATION CONTAINED HEREIN IS THE PROPRIETARY PROPERTY OF APPLE COMPUTER, INC. THE POSSESSOR AGREES TO THE FOLLOWING

I TO MAINTAIN THE DOCUMENT IN CONFIDENCE

II NOT TO REPRODUCE OR COPY IT

III NOT TO REVEAL OR PUBLISH IN WHOLE OR PART

APPLE COMPUTER INC.

SIZE	DRAWING NUMBER	REV.
D	051-7374	A
SCALE NONE	SHT 36 OF 79	

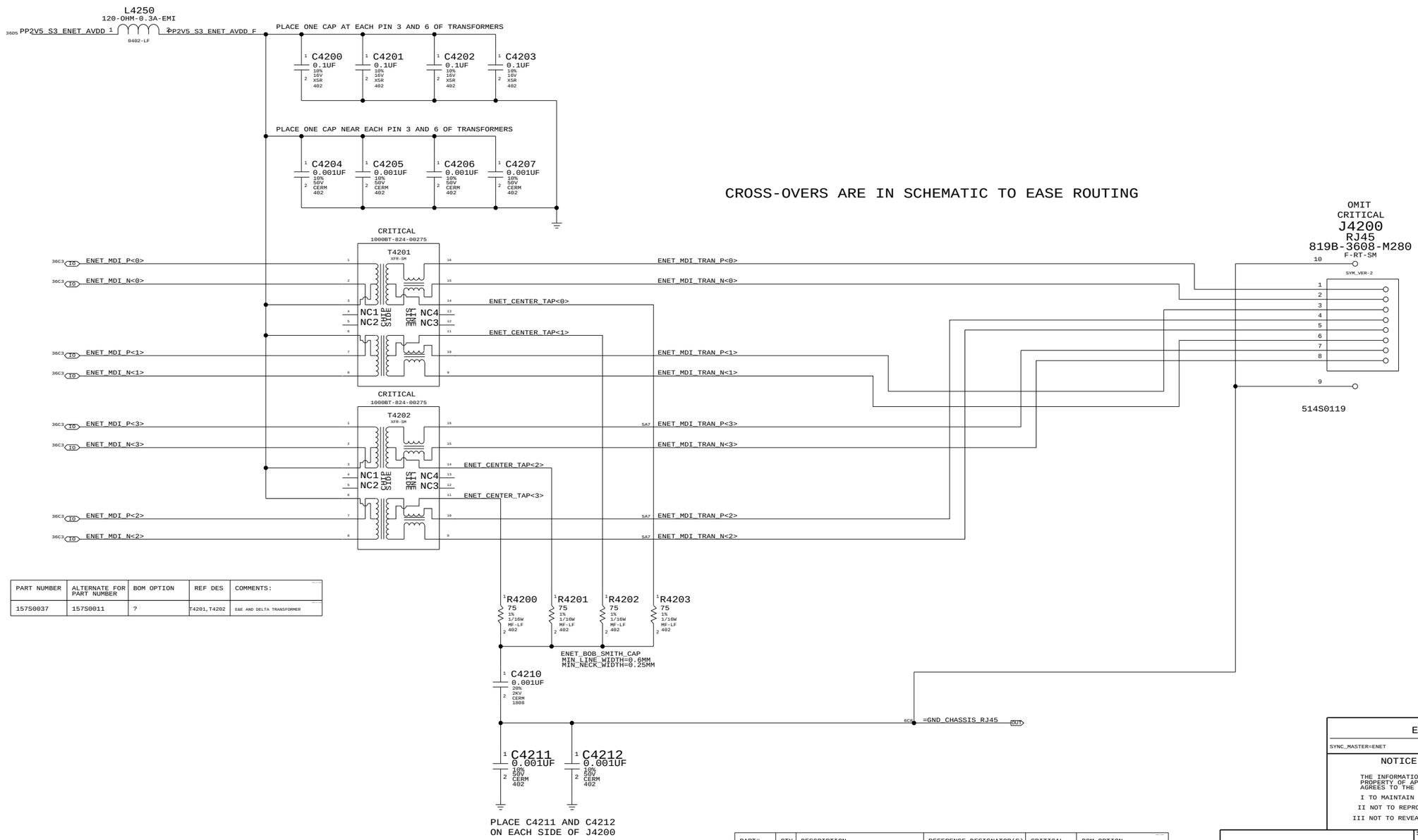

PART NUMBER	ALTERNATE FOR PART NUMBER	BOM OPTION	REF DES	COMMENTS:
157S0037	157S0011	?	T4201,T4202	E&E AND DELTA TRANSFORMER

PART#	QTY	DESCRIPTION	REFERENCE DESIGNATOR(S)	CRITICAL	BOM OPTION
514S0143	1	CONN,8P RJ-45 JACK,MIDPLANE,MG3,LF	J4200	CRITICAL	NORMAL
514S0144	1	CONN,8P RJ-45 JACK,MIDPLANE,BLACK,LF	J4200	CRITICAL	FANCY

ETHERNET CONNECTOR

SYNC_MASTER=ENET SYNC_DATE=11/14/2005

NOTICE OF PROPRIETARY PROPERTY

THE INFORMATION CONTAINED HEREIN IS THE PROPRIETARY PROPERTY OF APPLE COMPUTER, INC. THE POSSESSOR AGREES TO THE FOLLOWING

I TO MAINTAIN THE DOCUMENT IN CONFIDENCE

II NOT TO REPRODUCE OR COPY IT

III NOT TO REVEAL OR PUBLISH IN WHOLE OR PART

APPLE COMPUTER INC.

SIZE	DRAWING NUMBER	REV.
D	051-7374	A
SCALE NONE	SHT 37 OF 79	

PAGE NOTES

INPUT
=PP3V3_S0_FW - 3.3V POWER FOR FIREWIRE (MOBILE: OFF DURING SLEEP)
=PP3V3_S0_PCI - 3.3V POWER FOR PCI FIREWIRE (MOBILE: OFF DURING SLEEP)
PCI_GNT3_L - PCI GRANT FROM SB
PCI_CLK_FW - NEED TO REFERENCE TO ALIAS PAGE
PCI_RST_L - PCI RESET FROM SB
FW_PC0 - FIREWIRE POWER CLASS IDENTIFIER

INPUT/OUTPUT
PCI_AD<0..31>,PCI_C_BE_L<0..3>,PCI_FRAME_L,PCI_IRDY_L,PCI_TRDY_L,
PCI_DEVSEL_L, PCI_STOP_L, PCI_PAR, PCI_PERR_L, PCI_SERR_L
FW_A_TPA_P/N, FW_A_TPB_P/N, FW_A_TPBIAS - PORT 0 FIREWIRE DIFF PAIRS
FW_B_TPA_P/N, FW_B_TPB_P/N, FW_B_TPBIAS - PORT 1 FIREWIRE DIFF PAIRS
FW_C_TPA_P/N, FW_C_TPB_P/N, FW_C_TPBIAS - PORT 2 FIREWIRE DIFF PAIRS

OUTPUT
PCI_REQ3_L - PCI REQUEST TO SB
PM_CLKRUN_L - CLOCK-RUN PCI PROTOCOL
INT_PIRQD_L - INTERRUPT TO SB
PCI_PME_FW_L - DEDICATED PME FOR FIREWIRE (SB GPIO1)

PAGE HISTORY

5/19/2005 - FIRST REVISION OF PAGE
6/20/2005 - BGA VERSION OF FW323-06 ADDED
6/21/2005 - CHANGED INT* TO INT_PIRQD_L (PER ARCHITECTURAL DEFINITION)
6/21/2005 - CHANGED PCI_IO TO AD19 (PER ARCHITECTURAL DEFINITION)
6/21/2005 - CHANGED REQ/GNT TO REQ3/GNT3 (PER ARCHITECTURAL DEFINITION)
6/22/2005 - ADDED 510K PULL-DOWN ON RST* AND REMOVED CONNECTION TO PLT_RST_L
6/22/2005 - CHANGED CLK_PME_DIFF PAIR NAMES TO BE RE-USE COMPLIANT
6/22/2005 - REMOVED CONSTRAINT SETS AS THEY WILL BE MANAGED ON BOARD SIDE
6/22/2005 - REMOVED C4421 - REDUNDANT
6/22/2005 - BRING OUT PC0 CONNECTION TO BE CONNECTED ON PORT PAGE
7/26/2005 - CONNECTED PIN E10 TO GND

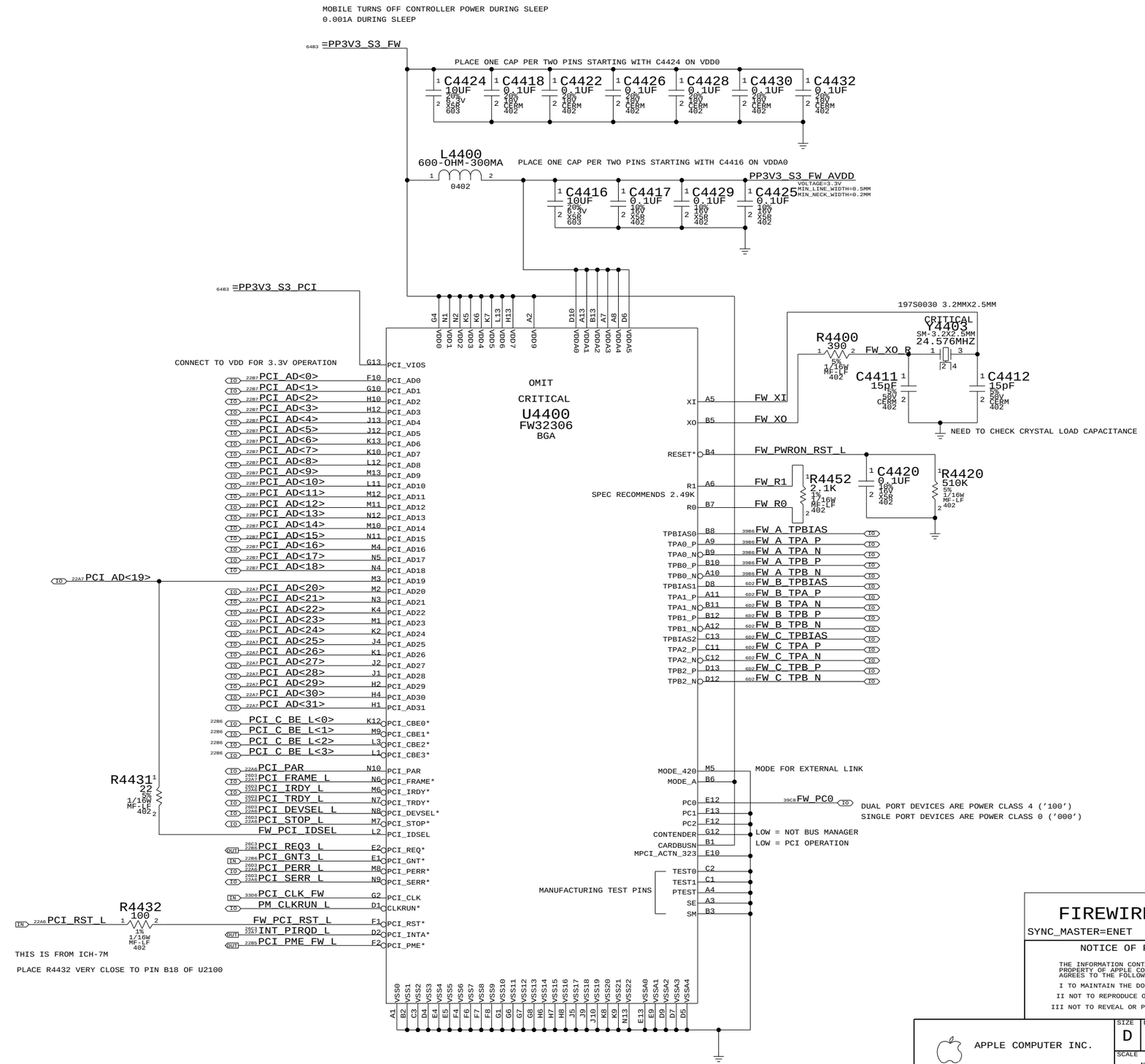

FIREWIRE CONTROLLER

SYNC_MASTER=ENET SYNC_DATE=08/30/2005

NOTICE OF PROPRIETARY PROPERTY

THE INFORMATION CONTAINED HEREIN IS THE PROPRIETARY PROPERTY OF APPLE COMPUTER, INC. THE POSSESSOR AGREES TO THE FOLLOWING

I TO MAINTAIN THE DOCUMENT IN CONFIDENCE
II NOT TO REPRODUCE OR COPY IT
III NOT TO REVEAL OR PUBLISH IN WHOLE OR PART

APPLE COMPUTER INC.

SIZE	DRAWING NUMBER	REV.
D	051-7374	A
SCALE NONE	SHT 38 OF 79	

Page Notes

INPUT:

=PPBUS_FW - PORT POWER

=PP3V3_S5_FW - DIGITAL POWER

=GND_CHASSIS_FW_PORT0 - CHASSIS GROUND

=FWPWR_PWRON - ADDITIONAL POWER CONTROL

INPUT/OUTPUT:

FW_TPA0_P/N,FW_TPB0_P/N,FW_TPBIAS0 - FIREWIRE DIFF PAIRS

OUTPUT:

FW_PC0 - POWER CLASS IDENTIFIER (SINGLE PORT - TIE LOW)

PAGE HISTORY

5/19/05 - INITIAL REVISION
6/22/05 - CHANGED DIFF PAIR NAMES TO MATCH REUSE
6/22/05 - REMOVED CONSTRAINTS BECAUSE USING ALLEGRO CONST MANAGER
6/22/05 - CONNECTED FW_PC0 FOR SINGLE PORT
7/26/05 - UPDATED LATE-VG POWER RAIL CIRCUIT FROM M1
7/26/05 - CHANGED CONNECTOR PORT NAMING TO PORT0
7/26/05 - SWITCHED TO 514-0124 FOR PRE-PROTO CONNECTOR
7/26/05 - REMOVED R4520 - IT HASN'T BEEN STUFFED FOR MANY PRODUCTS
7/26/05 - CHANGED FL4590 TO 1.1A VERSION
7/26/05 - REMOVED ETHERNET LOW-POWER MODE CIRCUIT
7/26/05 - UPDATED SIGNAL NAMES FOR FW PORT POWER ENABLE

1394b implementation based on Apple
FireWire Design Guide (FWDG 0.6, 5/14/03)

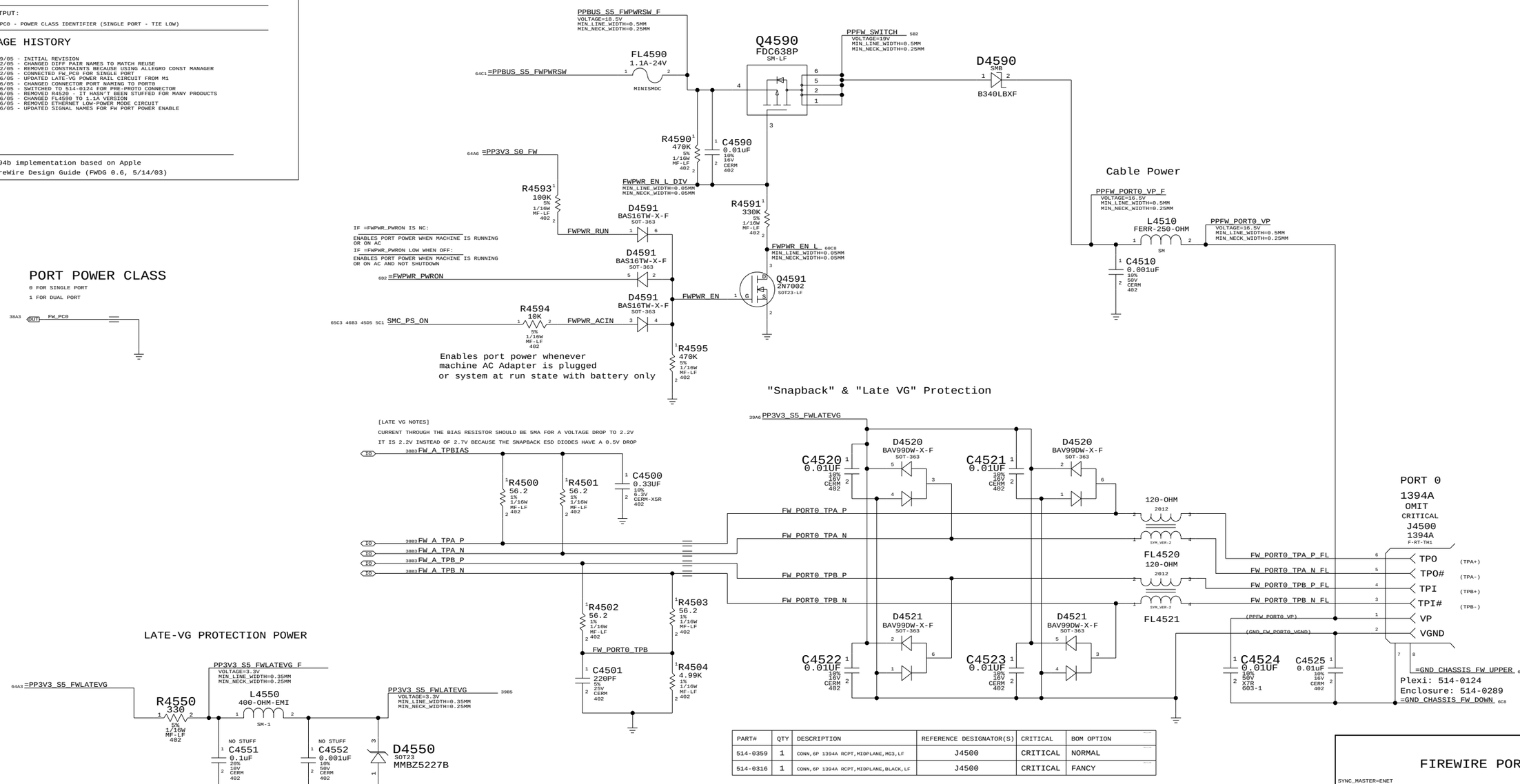

PART#	QTY	DESCRIPTION	REFERENCE DESIGNATOR(S)	CRITICAL	BOM OPTION
514-0359	1	CONN,6P 1394A RCPT,MIDPLANE,MG3,LF	J4500	CRITICAL	NORMAL
514-0316	1	CONN,6P 1394A RCPT,MIDPLANE,BLACK,LF	J4500	CRITICAL	FANCY

FIREWIRE PORT

SYNC_MASTER=ENET SYNC_DATE=11/16/2005

NOTICE OF PROPRIETARY PROPERTY

THE INFORMATION CONTAINED HEREIN IS THE PROPRIETARY PROPERTY OF APPLE COMPUTER, INC. THE POSSESSOR AGREES TO THE FOLLOWING

I TO MAINTAIN THE DOCUMENT IN CONFIDENCE

II NOT TO REPRODUCE OR COPY IT

III NOT TO REVEAL OR PUBLISH IN WHOLE OR PART

APPLE COMPUTER INC.

SIZE	DRAWING NUMBER	REV.
D	051-7374	A
SCALE NONE	SHT 39 OF 79	

GEYSER AND DIMM0 REMOTE TEMP SENSORS

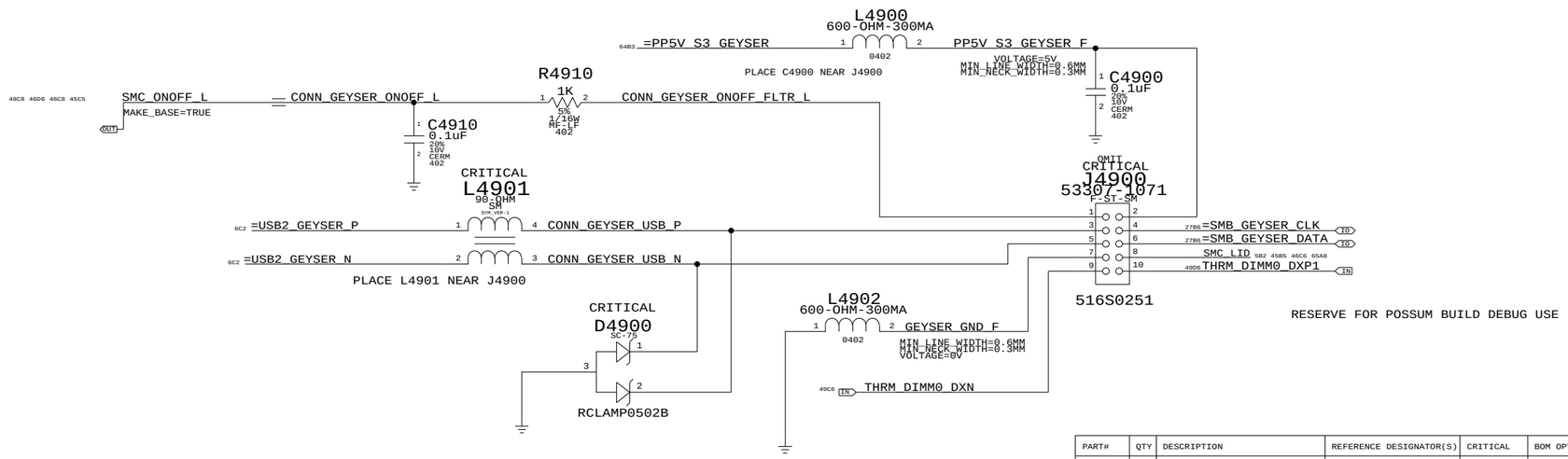

PART#	QTY	DESCRIPTION	REFERENCE DESIGNATOR(S)	CRITICAL	BOM OPTION
516S0482	1	ACES 88646-1071-NS	J4900	CRITICAL	NORMAL
516S0482	1	ACES 88646-1071-NS	J4900	CRITICAL	FANCY

CONNECTOR MISC

SYNC_MASTER=ENET SYNC_DATE=11/16/2005

NOTICE OF PROPRIETARY PROPERTY

THE INFORMATION CONTAINED HEREIN IS THE PROPRIETARY PROPERTY OF APPLE COMPUTER, INC. THE POSSESSOR AGREES TO THE FOLLOWING

I TO MAINTAIN THE DOCUMENT IN CONFIDENCE

II NOT TO REPRODUCE OR COPY IT

III NOT TO REVEAL OR PUBLISH IN WHOLE OR PART

APPLE COMPUTER INC.

SIZE	DRAWING NUMBER	REV.
D	051-7374	A

SCALE NONE

SHT 40 OF 79

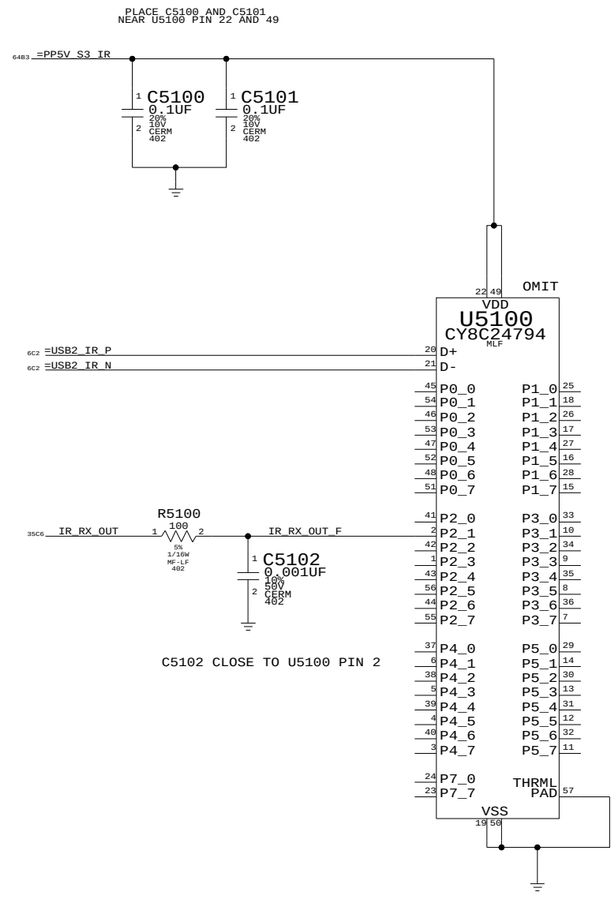

IR CONTROLLER

SYNC_MASTER=ENET SYNC_DATE=11/09/2005

NOTICE OF PROPRIETARY PROPERTY

THE INFORMATION CONTAINED HEREIN IS THE PROPRIETARY PROPERTY OF APPLE COMPUTER, INC. THE POSSESSOR AGREES TO THE FOLLOWING

I TO MAINTAIN THE DOCUMENT IN CONFIDENCE

II NOT TO REPRODUCE OR COPY IT

III NOT TO REVEAL OR PUBLISH IN WHOLE OR PART

APPLE COMPUTER INC.

SIZE	DRAWING NUMBER	REV.
D	051-7374	A
SCALE NONE	SHT 41 OF 79	

USB 2.0 CONNECTORS

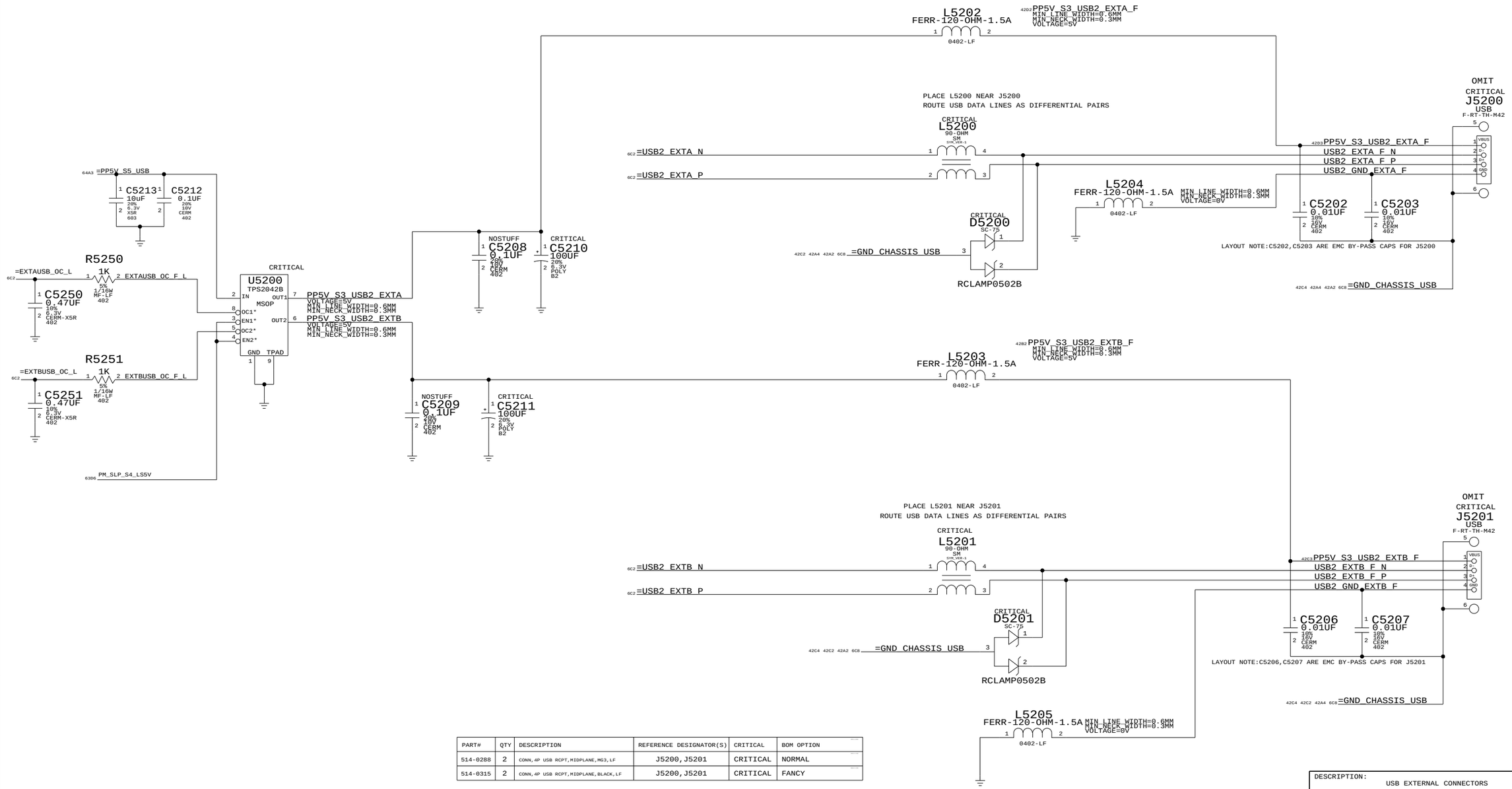

PART#	QTY	DESCRIPTION	REFERENCE DESIGNATOR(S)	CRITICAL	BOM OPTION
514-0288	2	CONN,4P USB RCPT,MIDPLANE,MG3,LF	J5200,J5201	CRITICAL	NORMAL
514-0315	2	CONN,4P USB RCPT,MIDPLANE,BLACK,LF	J5200,J5201	CRITICAL	FANCY

DESCRIPTION:
USB EXTERNAL CONNECTORS

NOTICE OF PROPRIETARY PROPERTY

THE INFORMATION CONTAINED HEREIN IS THE PROPRIETARY PROPERTY OF APPLE COMPUTER, INC. THE POSSESSOR AGREES TO THE FOLLOWING

I TO MAINTAIN THE DOCUMENT IN CONFIDENCE

II NOT TO REPRODUCE OR COPY IT

III NOT TO REVEAL OR PUBLISH IN WHOLE OR PART

APPLE COMPUTER INC.

SIZE	DRAWING NUMBER	REV.
D	051-7374	A
SCALE NONE	SHT 42 OF 79	

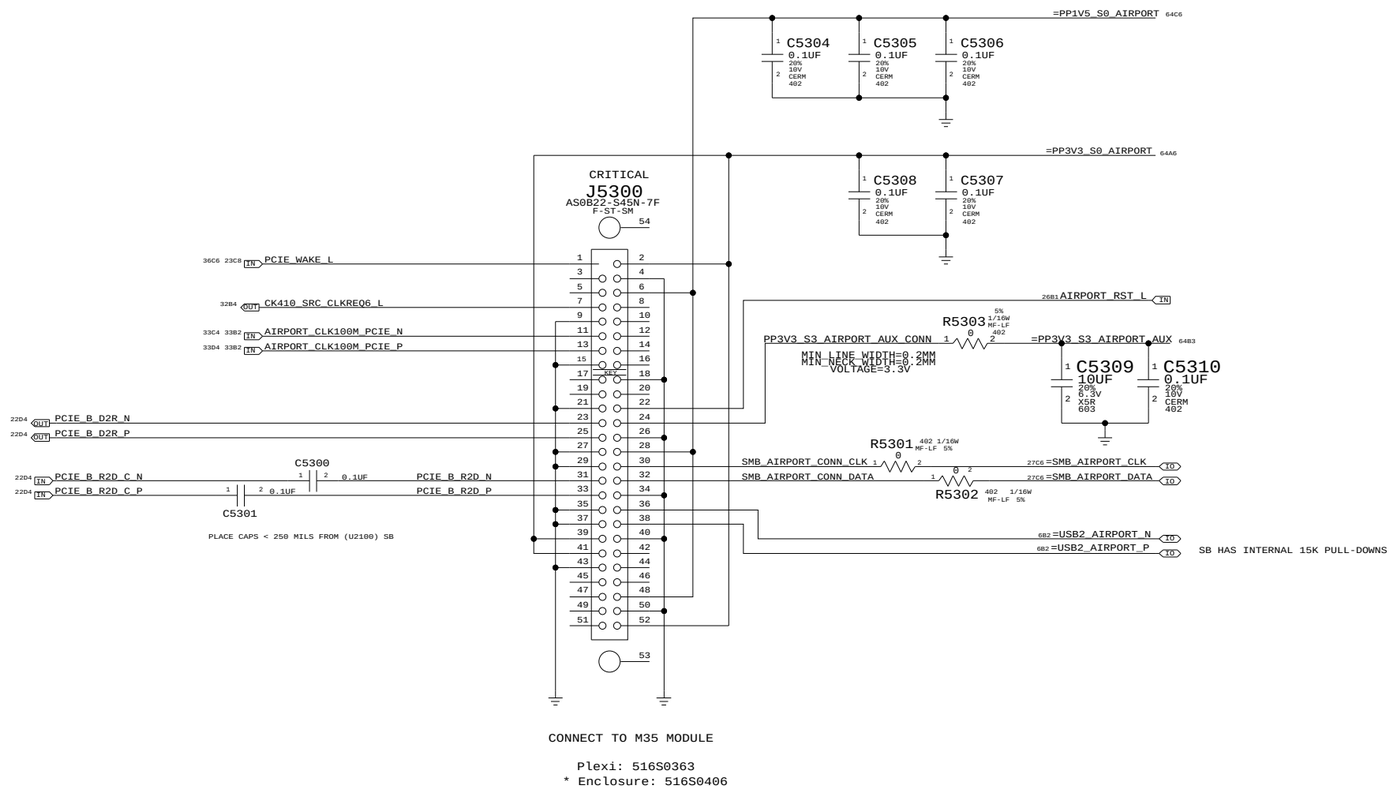

CONNECT TO M35 MODULE

Plexi: 516S0363
* Enclosure: 516S0406

AIRPORT CONN

NOTICE OF PROPRIETARY PROPERTY

THE INFORMATION CONTAINED HEREIN IS THE PROPRIETARY PROPERTY OF APPLE COMPUTER, INC. THE POSSESSOR AGREES TO THE FOLLOWING

I TO MAINTAIN THE DOCUMENT IN CONFIDENCE
II NOT TO REPRODUCE OR COPY IT
III NOT TO REVEAL OR PUBLISH IN WHOLE OR PART

APPLE COMPUTER INC.

SIZE	DRAWING NUMBER	REV.
D	051-7374	A
SCALE NONE	SHT 43 OF 79	

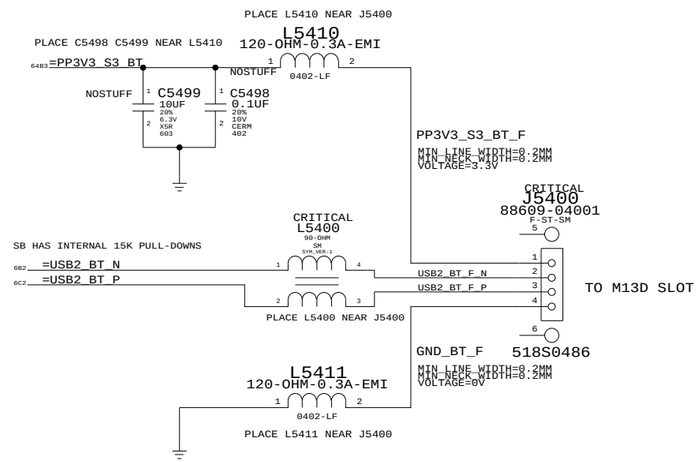

BLUETOOTH INTERFACE

NOTICE OF PROPRIETARY PROPERTY

THE INFORMATION CONTAINED HEREIN IS THE PROPRIETARY PROPERTY OF APPLE COMPUTER, INC. THE POSSESSOR AGREES TO THE FOLLOWING

I TO MAINTAIN THE DOCUMENT IN CONFIDENCE

II NOT TO REPRODUCE OR COPY IT

III NOT TO REVEAL OR PUBLISH IN WHOLE OR PART

APPLE COMPUTER INC.

SIZE	DRAWING NUMBER	REV.
D	051-7374	A
SCALE NONE	SHT 44 OF 79	

OMIT

U5800
SMC_H8S2116
BGA
(1 OF 4)

Signal	Pin	Pin	Signal
PM_LAN_ENABLE	B12	P10	P60/KIN0*
SMC_RSTGATE_L	C13	P11	P61/KIN1*
ALL_SYS_PWRGD	A15	P12	P62/KIN2*
RSMRST_PWRGD	B14	P13	P63/KIN3*
SMC_SB_NMI	B15	P14	P64/KIN4*
PM_RSMRST_L	C14	P15	P65/KIN5*
IMVP_VR_ON	D12	P16	P66/IRQ6*/KIN6*
PM_PWRBTN_L	C15	P17	P67/IRQ7*/KIN7*
SMC_P20	D13	P20	P70/AN0
SMC_P21	D14	P21	P71/AN1
SMC_P22	D15	P22	P72/AN2
SMC_P23	E12	P23	P73/AN3
SMC_BATT_TRICKLE_EN_L	E14	P24	P74/AN4
SMC_BATT_CHG_EN	E15	P25	P75/AN5
SMC_P26	E13	P26	P76/AN6
SMC_P27	F14	P27	P77/AN7
LPC_AD<0>	D9	P30/LAD0	P80/PME*
LPC_AD<1>	C9	P31/LAD1	P81/GA20
LPC_AD<2>	A9	P32/LAD2	P82/CLKRUN*
LPC_AD<3>	B9	P33/LAD3	P83/LPCPD*
LPC_FRAME_L	D8	P34/LFRAME*	P84/IRQ3*/TXD1
SMC_LRESET_L	C8	P35/LRESET*	P85/IRQ4*/RXD1
PCI_CLK_SMC	A8	P36/LCLK	P86/IRQ5*/SCK1/SCL1
INT_SERIRQ	D7	P37/SERIRQ	
SMC_DISPLAY_ENABLE	A5	P40/TMI0	
SMC_SYS_LED_16B	B5	P41/TMO0	
SMB_BSB_DATA (BAT B SMBUS DATA)	D5	P42/SDA1	
SMC_TPM_PP (TPM physical presence)	C3	P43/TMI1/EXSCK1	
SMC_P44	B1	P44/TMO1	
SMC_BKLIGHT_ENABLE	C2	P45	
SMC_P46	D3	P46/PWX0/PWM0	
SMC_SYS_KBDLED	C1	P47/PWX1/PWM1	
SMC_TX_L (Debug feature,16550 Transmit)	G1	P50	
SMC_RX_L (Debug feature,16550 Receive)	G4	P51	
SMB_0_CLK	F2	P52/SCL0	

Signal	Pin
SMC_PM_G2_EN	L13
SMC_PS_ON (Enable AC adapter PWR)	L14
SPI_ARB	L15
SPI_SCLK	K12
SPI_SI	K13
SPI_SO	K14
SMC_PROCHOT_3_3_L	J12
SMC_CPU_INIT_3_3_L	J13
SMC_CPU_ISENSE	N12
SMC_CPU_VSENSE	R13
SMC_GPU_ISENSE	P13
SMC_GPU_VSENSE	R14
SMC_DCIN_ISENSE	P14
SMC_PBUS_VSENSE	R15
SMC_BATT_ISENSE	N13
SMC_FWIRE_ISENSE	P15
SMC_WAKE_SCI_L	C7
SMC_TPM_GPIO	A7
PM_CLKRUN_L	B7
PM_SUS_STAT_L	D6
SC_TX_L (Serial Port Transmit)	C6
SC_RX_L (Serial Port Receive)	A6
SMB_BSB_CLK (BAT B SMBUS CLK)	B6
SMC_ONOFF_L	K4
SMC_BC_ACOK (AC I/P detect)	J2
SMC_BS_ALRT_L	J1
PM_SLP_S3_L	J3
PM_SLP_S4_L	J4
PM_SLP_S5_L	H2
SMC_SUS_CLK	H1
SMB_0_DATA	G2

OMIT

U5800
SMC_H8S2116
BGA
(2 OF 4)

Signal	Pin	Pin	Signal
SMC_RCIN_L	R3	PA0/KIN8*/PA2DC	PE0
BOOT_LPC_SPI_L	P3	PA1/KIN9*/PA2DD	PE1*/ETCK
PM_SYSRST_L	R2	PA2/KIN10*/PS2AC	PE2*/ETDI
SMC_TPM_RESET_L	N3	PA3/KIN11*/PS2AD	PE3*/ETDO
PM_EXTTS_L<0>	R1	PA4/KIN12*/PS2BC	PE4*/ETMS
PM_THRM_L	N2	PA5/KIN13*/PS2BD	PF0/IRQ8*/PWM2
SYS_ONEWIRE	M4	PA6/KIN14*/PS2CC	PF1/IRQ9*/PWM3
PM_BATLOW_L	N1	PA7/KIN15*/PS2CD	PF2/IRQ10*/TMOY
SMC_EXTSMI_L	B10	PB0/LSMI*	PF3/IRQ11*/TMOX
SMC_RUNTIME_SCI_L	A10	PB1/LSCI	PF4/PWM4
SMC_ODD_DETECT (Optical Disk Insert detect)	D10	PB2	PF5/PWM5
ISENSE_CAL_EN	A11	PB3	PF6/PWM6
SMC_EXCARD_CP	B11	PB4	PF7/PWM7
SMC_EXCARD_PWR_EN	C11	PB5	
SMC_EXCARD_PWR_OC_L	A12	PB6	PG0/EXIRQ8*/TMIX
SMC_PB7	D11	PB7	PG1/EXIRQ9*/TMIY
SMC_FAN_0_CTL	G14	PC0/TIOCA0/WUE8*	PG2/EXIRQ10*/SDA2
SMC_FAN_1_CTL	G15	PC1/TIOCB0/WUE9*	PG3/EXIRQ11*/SCL2
SMC_FAN_2_CTL	G13	PC2/TIOCC0/TCLKA/WUE10*	PG4/EXIRQ12*/EXSDAA
SMC_FAN_3_CTL	G12	PC3/TIOCD0/TCLKB/WUE11*	PG5/EXIRQ13*/EXSCLA
SMC_FAN_0_TACH	H14	PC4/TIOCA1/WUE12*	PG6/EXIRQ14*/EXSDAB
SMC_FAN_1_TACH	H15	PC5/TIOCB1/TCLKC/WUE13*	PG7/EXIRQ15*/EXSCLB
SMC_FAN_2_TACH	H13	PC6/TIOCA2/WUE14*	
SMC_FAN_3_TACH	H12	PC7/TIOCB2/TCLKD/WUE15*	
SMS_X_AXIS	M11	PD0/AN8	PH0/EXIRQ6*
SMS_Y_AXIS	P11	PD1/AN9	PH1/EXIRQ7*
SMS_Z_AXIS	R11	PD2/AN10	PH2/FWE
SMC_PD3 (ANALOG_ID)	N11	PD3/AN11	PH3/EXEXCL
SMC_NB_ISENSE	P10	PD4/AN12	PH4
SMC_MEM_ISENSE	R10	PD5/AN13	PH5
ALS_LEFT	N10	PD6/AN14	
ALS_RIGHT	M10	PD7/AN15	

Signal	Pin
SMC_CASE_OPEN (CASE OPEN/CLOSE DETECT)	M3
SMC_TCK	M2
SMC_TDI	M1
SMC_TDO	L4
SMC_TMS	L2
SMC_DISP_BKLT_B	M7
SMC_DISP_BKLT_A	P6
SMC_LID (LID OPEN/CLOSE SW)	R6
SMC_CPU_RESET_3_3_L	N6
SMC_BATT_ISET	M6
SMC_BATT_VSET	R5
SMC_SYS_ISET	P5
SMC_SYS_VSET	N5
SPI_CE_L	P9
SMC_PG1	R9
SMB_BSA_DATA	N9
SMB_BSA_CLK	P8
SMB_RMT_DATA	R8
SMB_RMT_CLK	M8
SMB_MLB_DATA	P7
SMB_MLB_CLK	R7
SMC_PROCHOT	E1
SMC_THRMTRIP	F3
SMC_FWE	K2
ALS_GAIN	C4
SMS_INT_L	D4
SMS_ONOFF_L	B3

OMIT

U5800
SMC_H8S2116
BGA
(4 OF 4)

Pin	Signal	Pin	Signal
G3	NC0	F15	NC12
H3	NC1	A14	NC13
K3	NC2	C12	NC14
L3	NC3	C10	NC15
N4	NC4	C5	NC16
M5	NC5	A3	NC17
N7	NC6	B8	NC18
M12	NC7	E4	NC19
M13	NC8	H4	NC20
L12	NC9	M9	NC21
K15	NC10	N8	NC22
J14	NC11		

=PP3V42_G3H_SMC

CRITICAL
C5802 22UF 20% 6.3V CERM-X5R 805
C5803 0.1UF 20% 10V CERM 402
C5804 0.1UF 20% 10V CERM 402
C5805 0.1UF 20% 10V CERM 402
C5806 0.1UF 20% 10V CERM 402

LAYOUT NOTE:
PLACE R5899, C5820 NEAR SMC PIN N14, N15

(VCL IS INTERNAL RAIL)
SMC_VCL

=PP3V42_G3H_SMC

R5899 4.7 5% 1/16W MF-LF 402

C5807 0.47UF 10% 6.3V CERM-X5R 402
LAYOUT NOTE:
PLACE C5807 NEAR PIN F1

=PP3V42_G3H_SMC

R5809 10K 5% 1/16W MF-LF 402

R5801 10K 5% 1/16W MF-LF 402

PP3V3_AVREF_SMC

SMC_AVCC_RC

C5820 0.1UF 20% 10V CERM 402

SMC_MD1 (Should PD) (To debug card for mode select)
KBC_MDE (Should PU)

R5802 10K 5% 1/16W MF-LF 402

R5803 0 5% 1/16W MF-LF 402

NOSTUFF

GND_SMC_AVSS

OMIT
U5800
SMC_H8S2116
BGA
(3 OF 4)

Signal	Pin	Pin	Signal
		N14	AVCC
		N15	AVCC
		P2	VCC
		P1	VCC
		J15	VCC
		A1	VCC
		F1	VCL
		M14	AVREF
		M15	AVREF
SMC_RST_L	E3	RES*	
SMC_XTAL	A2	XTAL	
SMC_EXTAL	B2	EXTAL	
		E2	MD1
		K1	MD2
		F4	NMI (Should PD) (To debug card for mode select)
		L1	ETRST*
		P12	AVSS
		R12	VSS

SMC_NMI
SMC_TRST_L

R5898 10K 5% 1/16W MF-LF 402

D1 F4 R4 F12 F13 B13 A13 A4 B4 D2

XW5800
SM
1 2

GND_SMC_AVSS

SMC

SYNC_MASTER=SMC SYNC_DATE=08/18/2005

NOTICE OF PROPRIETARY PROPERTY

THE INFORMATION CONTAINED HEREIN IS THE PROPRIETARY PROPERTY OF APPLE COMPUTER, INC. THE POSSESSOR AGREES TO THE FOLLOWING

I TO MAINTAIN THE DOCUMENT IN CONFIDENCE
II NOT TO REPRODUCE OR COPY IT
III NOT TO REVEAL OR PUBLISH IN WHOLE OR PART

APPLE COMPUTER INC.

SIZE	DRAWING NUMBER	REV.
D	051-7374	A
SCALE NONE	SHT 45 OF 79	

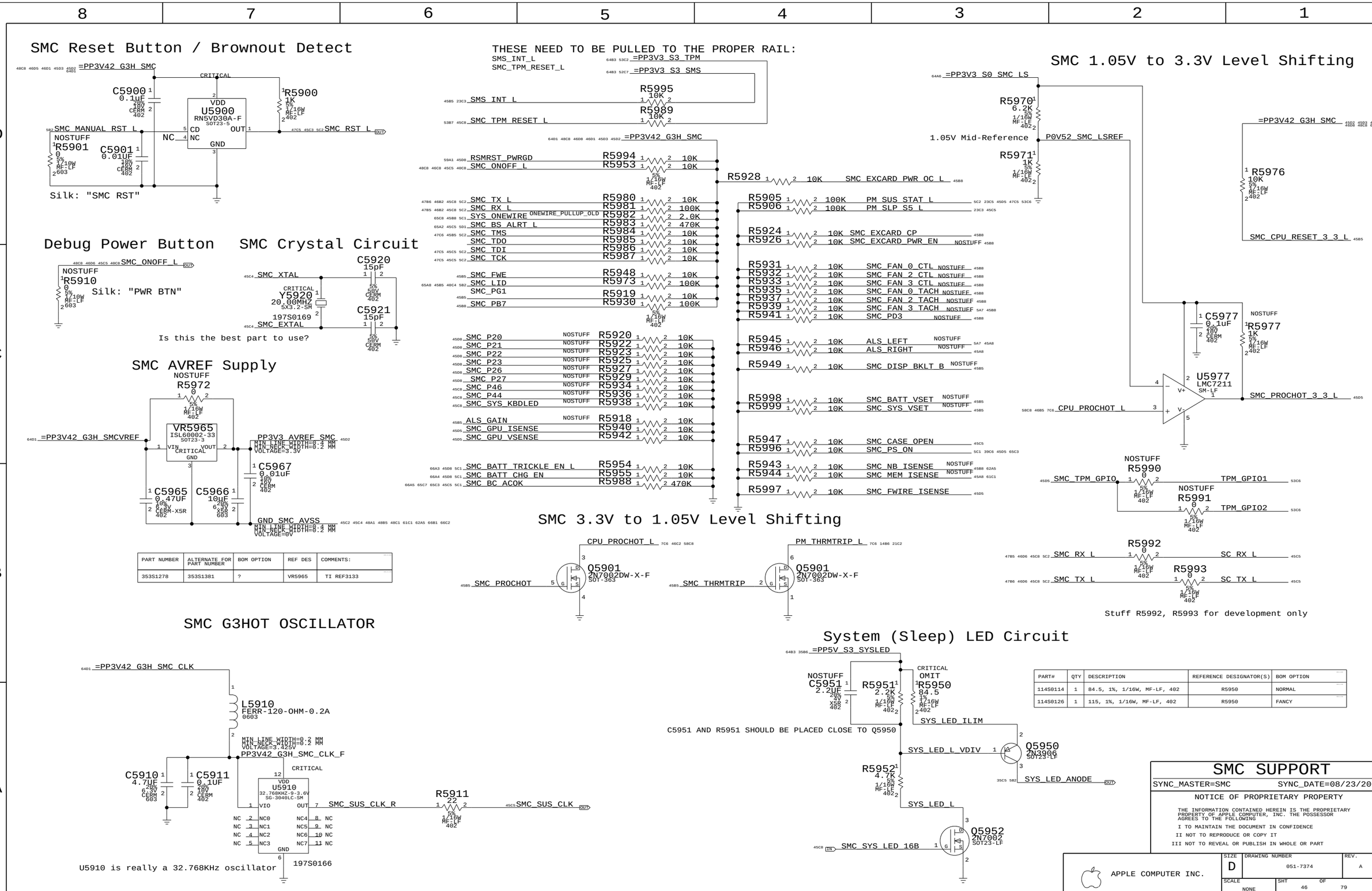
SMC Reset Button / Brownout Detect
=PP3V42_G3H_SMC
C5900 0.1uF 20% 16V CERM 402
CRITICAL
U5900 RN5VD30A-F SOT23-5
VDD CD NC GND OUT
R5900 1K 5% 1/16W MF-LF 402
SMC_MANUAL_RST_L
NOSTUFF R5901 0 5% 1/10W MF-LF 603
C5901 0.01UF 10% 16V CERM 402
SMC_RST_L
Silk: "SMC RST"
THESE NEED TO BE PULLED TO THE PROPER RAIL:
SMS_INT_L
SMC_TPM_RESET_L
=PP3V3_S3_TPM
=PP3V3_S3_SMS
R5995 10K
R5989 10K
=PP3V42_G3H_SMC
RSMRST_PWRGD R5994 10K
SMC_ONOFF_L R5953 10K
R5928 10K SMC_EXCARD_PWR_OC_L
SMC_TX_L R5980 10K
SMC_RX_L R5981 100K
SYS_ONEWIRE R5982 2.0K
ONEWIRE_PULLUP_OLD
SMC_BS_ALRT_L R5983 470K
SMC_TMS R5984 10K
SMC_TDO R5985 10K
SMC_TDI R5986 10K
SMC_TCK R5987 10K
SMC_FWE R5948 10K
SMC_LID R5973 100K
SMC_PG1 R5919 10K
SMC_PB7 R5930 100K
SMC_P20 R5920 10K
SMC_P21 R5922 10K
SMC_P22 R5923 10K
SMC_P23 R5925 10K
SMC_P26 R5927 10K
SMC_P27 R5929 10K
SMC_P46 R5934 10K
SMC_P44 R5936 10K
SMC_SYS_KBDLED R5938 10K
ALS_GAIN R5918 10K
SMC_GPU_ISENSE R5940 10K
SMC_GPU_VSENSE R5942 10K
SMC_BATT_TRICKLE_EN_L R5954 10K
SMC_BATT_CHG_EN R5955 10K
SMC_BC_ACOK R5988 470K
NOSTUFF
SMC 3.3V to 1.05V Level Shifting
=PP3V3_S0_SMC_LS
R5970 6.2K 5% 1/16W MF-LF 402
1.05V Mid-Reference
P0V52_SMC_LSREF
R5971 1K 5% 1/16W MF-LF 402
R5905 100K PM_SUS_STAT_L
R5906 100K PM_SLP_S5_L
R5924 10K SMC_EXCARD_CP
R5926 10K SMC_EXCARD_PWR_EN
R5931 10K SMC_FAN_0_CTL
R5932 10K SMC_FAN_2_CTL
R5933 10K SMC_FAN_3_CTL
R5935 10K SMC_FAN_0_TACH
R5937 10K SMC_FAN_2_TACH
R5939 10K SMC_FAN_3_TACH
R5941 10K SMC_PD3
R5945 10K ALS_LEFT
R5946 10K ALS_RIGHT
R5949 10K SMC_DISP_BKLT_B
R5998 10K SMC_BATT_VSET
R5999 10K SMC_SYS_VSET
R5947 10K SMC_CASE_OPEN
R5996 10K SMC_PS_ON
R5943 10K SMC_NB_ISENSE
R5944 10K SMC_MEM_ISENSE
R5997 10K SMC_FWIRE_ISENSE
SMC 1.05V to 3.3V Level Shifting
=PP3V42_G3H_SMC
R5976 10K 5% 1/10W MF-LF 402
SMC_CPU_RESET_3_3_L
C5977 0.1uF 20% 16V CERM 402
R5977 1K 5% 1/16W MF-LF 402
U5977 LMC7211 SM-LF
CPU_PROCHOT_L
SMC_PROCHOT_3_3_L
Debug Power Button
SMC_ONOFF_L
NOSTUFF R5910 0 5% 1/10W MF-LF 603
Silk: "PWR BTN"
SMC Crystal Circuit
SMC_XTAL
C5920 15pF 5% 50V CERM 402
CRITICAL Y5920 20.00MHZ 5X3.2-SM
197S0169
C5921 15pF 5% 50V CERM 402
SMC_EXTAL
Is this the best part to use?
SMC AVREF Supply
NOSTUFF R5972 0 5% 1/10W MF-LF 402
=PP3V42_G3H_SMCVREF
VR5965 ISL60002-33 SOT23-3
VIN VOUT GND
PP3V3_AVREF_SMC
MIN_LINE_WIDTH=0.4 MM
MIN_NECK_WIDTH=0.2 MM
VOLTAGE=3.3V
C5967 0.01UF 10% 16V CERM 402
C5965 0.47UF 10% 6.3V CERM-X5R 402
C5966 10uF 20% 6.3V X5R 603
GND_SMC_AVSS
MIN_LINE_WIDTH=0.4 MM
MIN_NECK_WIDTH=0.2 MM
VOLTAGE=0V
PART NUMBER | ALTERNATE FOR PART NUMBER | BOM OPTION | REF DES | COMMENTS:
353S1278 | 353S1381 | ? | VR5965 | TI REF3133
SMC G3HOT OSCILLATOR
CPU_PROCHOT_L
Q5901 2N7002DW-X-F SOT-363
SMC_PROCHOT
PM_THRMTRIP_L
Q5901 2N7002DW-X-F SOT-363
SMC_THRMTRIP
R5992 0 5% 1/16W MF-LF 402
SMC_RX_L
SC_RX_L
R5993 0 5% 1/16W MF-LF 402
SMC_TX_L
SC_TX_L
Stuff R5992, R5993 for development only
NOSTUFF R5990 0 5% 1/16W MF-LF 402
SMC_TPM_GPIO
TPM_GPIO1
NOSTUFF R5991 0 5% 1/16W MF-LF 402
TPM_GPIO2
System (Sleep) LED Circuit
=PP5V_S3_SYSLED
NOSTUFF C5951 2.2UF 20% 10V X5R 402
R5951 2.2K 5% 1/16W MF-LF 402
CRITICAL OMIT R5950 84.5 1% 1/16W MF-LF 402
SYS_LED_ILIM
C5951 AND R5951 SHOULD BE PLACED CLOSE TO Q5950
SYS_LED_L_VDIV
Q5950 2N3906 SOT23-LF
R5952 4.7K 5% 1/16W MF-LF 402
SYS_LED_ANODE
SYS_LED_L
Q5952 2N7002 SOT23-LF
SMC_SYS_LED_16B
PART# | QTY | DESCRIPTION | REFERENCE DESIGNATOR(S) | BOM OPTION
114S0114 | 1 | 84.5, 1%, 1/16W, MF-LF, 402 | R5950 | NORMAL
114S0126 | 1 | 115, 1%, 1/16W, MF-LF, 402 | R5950 | FANCY
=PP3V42_G3H_SMC_CLK
L5910 FERR-120-OHM-0.2A 0603
MIN_LINE_WIDTH=0.2 MM
MIN_NECK_WIDTH=0.2 MM
VOLTAGE=3.425V
PP3V42_G3H_SMC_CLK_F
C5910 4.7UF 20% 6.3V CERM 603
C5911 0.1UF 20% 16V CERM 402
CRITICAL
U5910 32.768KHZ-9-3.6V SG-3040LC-SM
VDD VIO NC0 NC1 NC2 NC3 OUT NC4 NC5 NC6 NC7 GND
SMC_SUS_CLK_R
R5911 22 5% 1/16W MF-LF 402
SMC_SUS_CLK
U5910 is really a 32.768KHz oscillator
197S0166
SMC SUPPORT
SYNC_MASTER=SMC
SYNC_DATE=08/23/2005
NOTICE OF PROPRIETARY PROPERTY
THE INFORMATION CONTAINED HEREIN IS THE PROPRIETARY PROPERTY OF APPLE COMPUTER, INC. THE POSSESSOR AGREES TO THE FOLLOWING
I TO MAINTAIN THE DOCUMENT IN CONFIDENCE
II NOT TO REPRODUCE OR COPY IT
III NOT TO REVEAL OR PUBLISH IN WHOLE OR PART
APPLE COMPUTER INC.
SIZE D
DRAWING NUMBER 051-7374
REV. A
SCALE NONE
SHT 46 OF 79

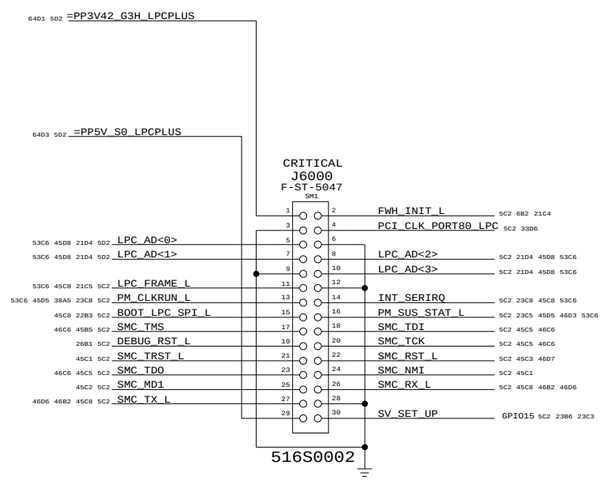

LPC+ Debug Connector

SYNC_MASTER=NB SYNC_DATE=06/30/2005

NOTICE OF PROPRIETARY PROPERTY

THE INFORMATION CONTAINED HEREIN IS THE PROPRIETARY PROPERTY OF APPLE COMPUTER, INC. THE POSSESSOR AGREES TO THE FOLLOWING

I TO MAINTAIN THE DOCUMENT IN CONFIDENCE

II NOT TO REPRODUCE OR COPY IT

III NOT TO REVEAL OR PUBLISH IN WHOLE OR PART

APPLE COMPUTER INC.

SIZE	DRAWING NUMBER	REV.
D	051-7374	A

SCALE NONE SHT 47 OF 79

CPU CURRENT SENSE

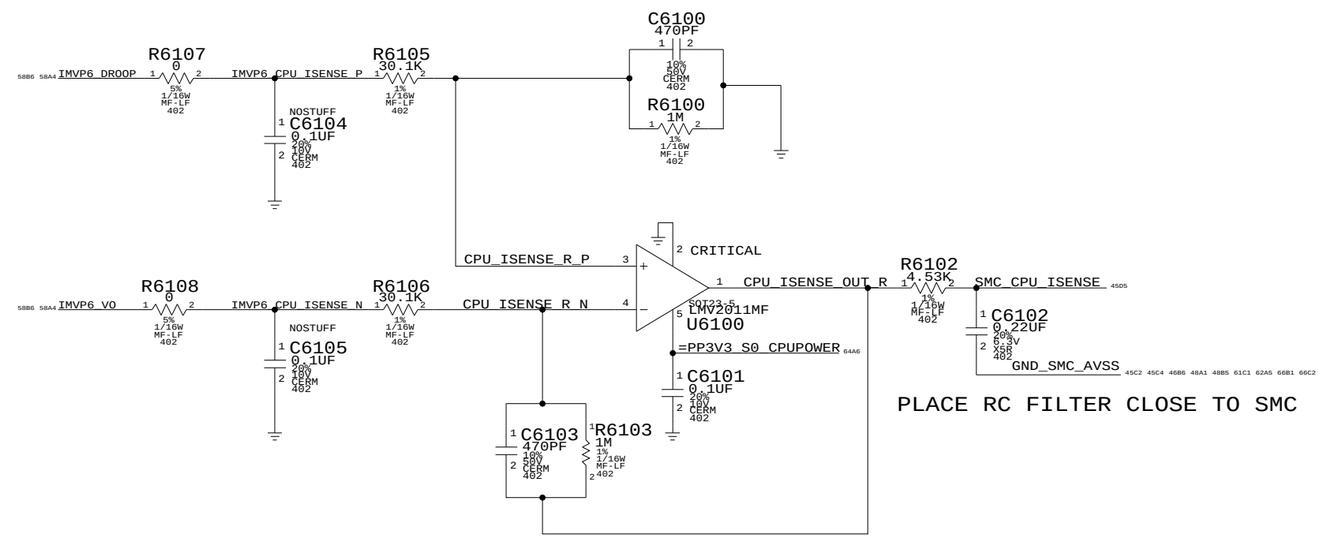

PLACE RC FILTER CLOSE TO SMC

PROCESSOR DCIN VOLTAGE SENSE

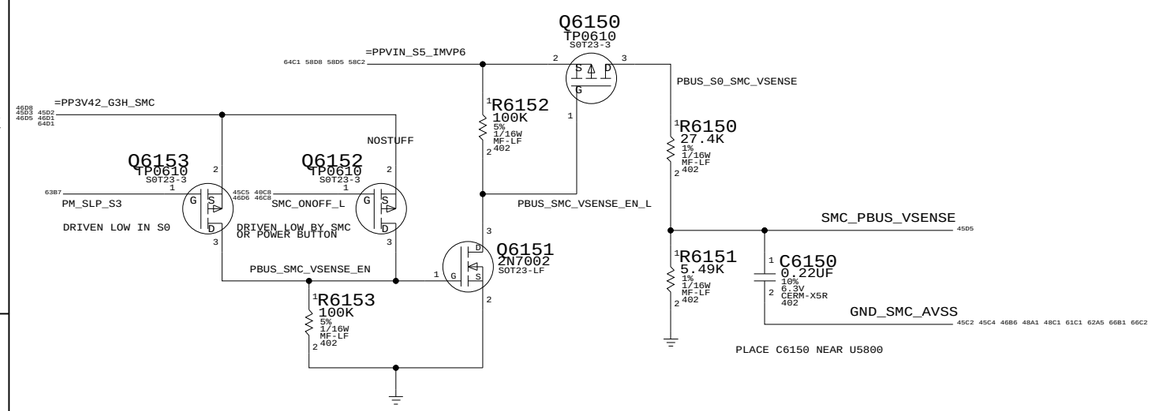

CPU VOLTAGE SENSE

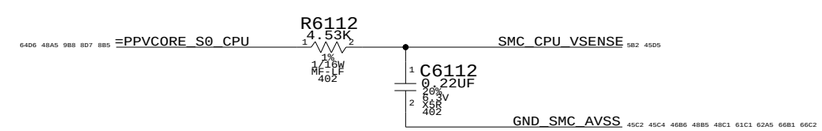

PLACE RC FILTER CLOSE TO SMC

Current Sense Calibration Circuit

Switches in fixed load on power supplies to calibrate current sense circuits

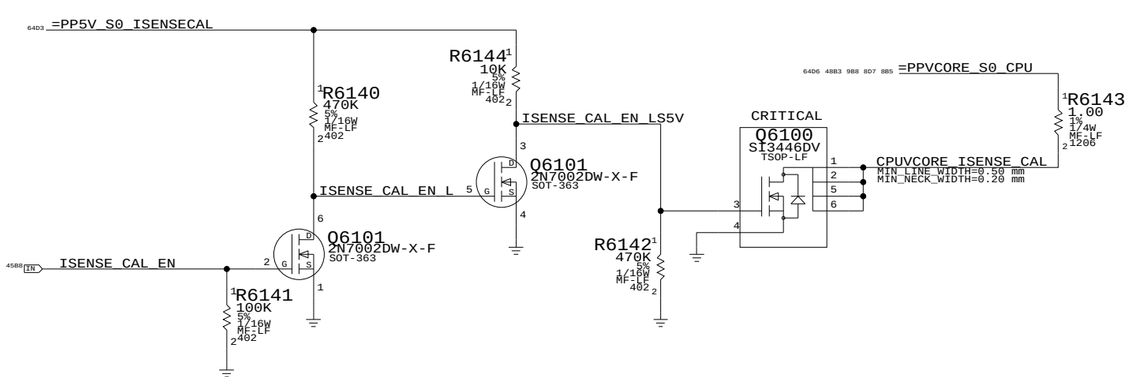

CPU Current & Voltage Sense

SYNC_MASTER=ENET SYNC_DATE=08/30/2005

NOTICE OF PROPRIETARY PROPERTY

THE INFORMATION CONTAINED HEREIN IS THE PROPRIETARY PROPERTY OF APPLE COMPUTER, INC. THE POSSESSOR AGREES TO THE FOLLOWING

I TO MAINTAIN THE DOCUMENT IN CONFIDENCE

II NOT TO REPRODUCE OR COPY IT

III NOT TO REVEAL OR PUBLISH IN WHOLE OR PART

APPLE COMPUTER INC.

SIZE	DRAWING NUMBER	REV.
D	051-7374	A
SCALE NONE	SHT 48 OF 79	

DIMM0 TEMPERATURE ZONE

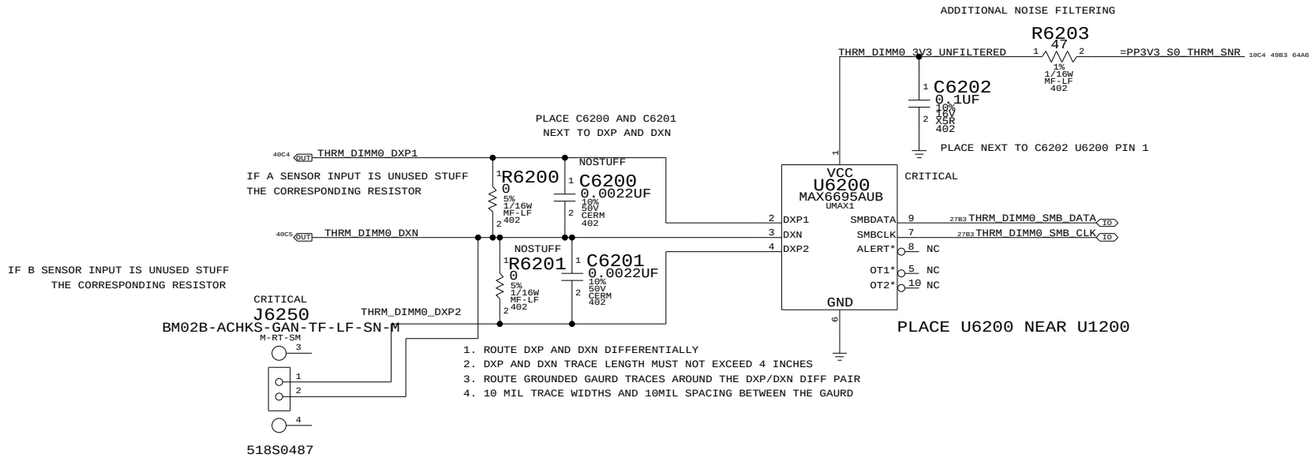

NOTE: REPLACE J6250 AND J6251 FROM 518S0332 TO 518S0452 AND THEN 518S0487
AFTER THIS CHANGE, THE SCHEAMTIC DOES NOT MATCH THE PCB ON THESE TWO LOCATIONS.

DIMM1 TEMPERATURE ZONE

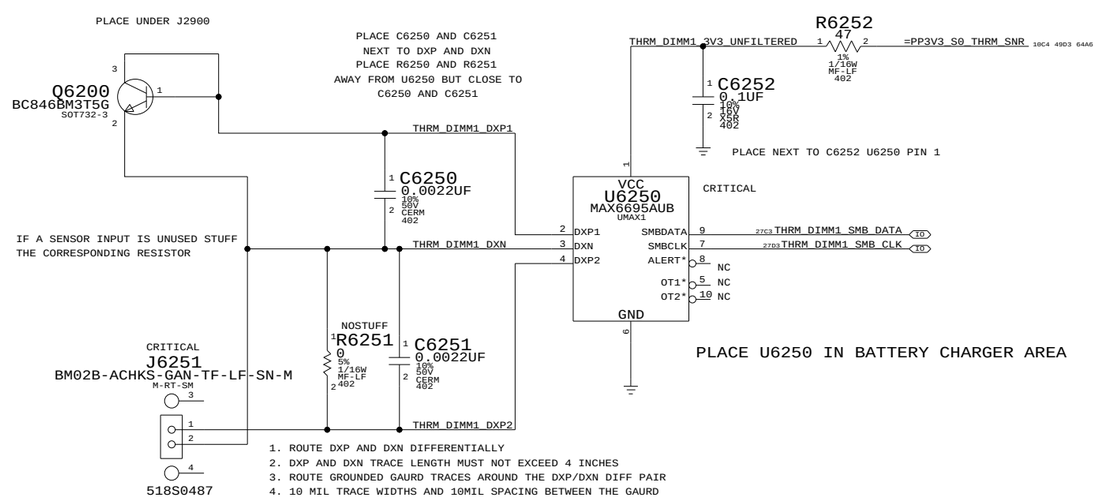

NOTE: REPLACE J6250 AND J6251 FROM 518S0332 TO 518S0452 AND 518S0487
AFTER THIS CHANGE, THE SCHEAMTIC DOES NOT MATCH THE PCB ON THESE TWO LOCATIONS.

TEMPERATURE SENSE

SYNC_MASTER=ENET SYNC_DATE=11/09/2005

NOTICE OF PROPRIETARY PROPERTY

THE INFORMATION CONTAINED HEREIN IS THE PROPRIETARY PROPERTY OF APPLE COMPUTER, INC. THE POSSESSOR AGREES TO THE FOLLOWING

I TO MAINTAIN THE DOCUMENT IN CONFIDENCE

II NOT TO REPRODUCE OR COPY IT

III NOT TO REVEAL OR PUBLISH IN WHOLE OR PART

APPLE COMPUTER INC.

SIZE	DRAWING NUMBER	REV.
D	051-7374	A
SCALE NONE	SHT 49 OF 79	

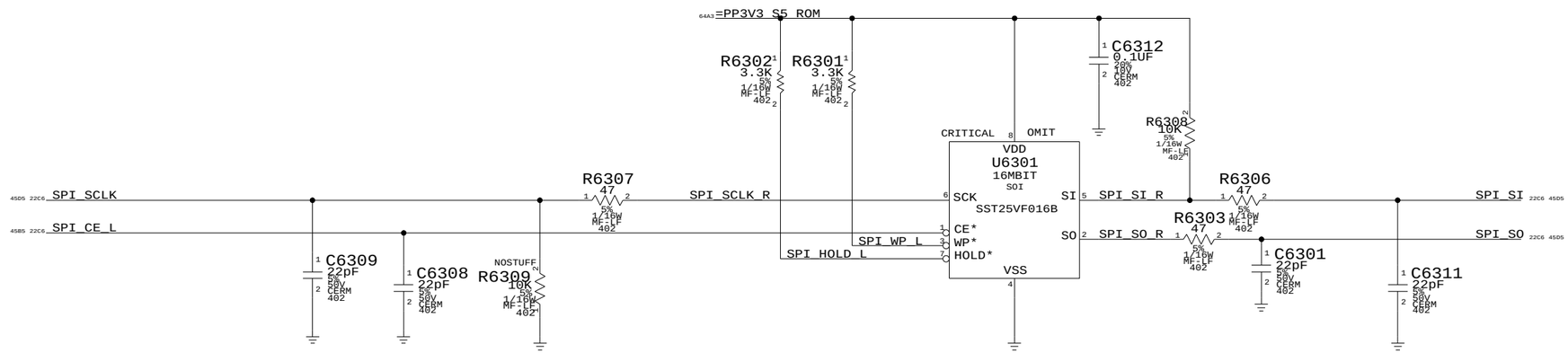

R6309 IS NOT NEEDED WHEN SHARING SPI FLASH WITH ICH7M AND TEKOA(LAN CHIP)

R6307 AND R6306 SHOULD BE PLACED LESS THAN 100 MILS FORM ICH7M

R6303 SHOULD BE PLACED LESS THAN 100 MILS FORM FLASH ROM

SPI BOOTROM

SYNC_MASTER=MASTER SYNC_DATE=5/23/05

NOTICE OF PROPRIETARY PROPERTY

THE INFORMATION CONTAINED HEREIN IS THE PROPRIETARY PROPERTY OF APPLE COMPUTER, INC. THE POSSESSOR AGREES TO THE FOLLOWING

I TO MAINTAIN THE DOCUMENT IN CONFIDENCE

II NOT TO REPRODUCE OR COPY IT

III NOT TO REVEAL OR PUBLISH IN WHOLE OR PART

APPLE COMPUTER INC.

SIZE	DRAWING NUMBER	REV.
D	051-7374	A
SCALE NONE	SHT 50 OF 79	

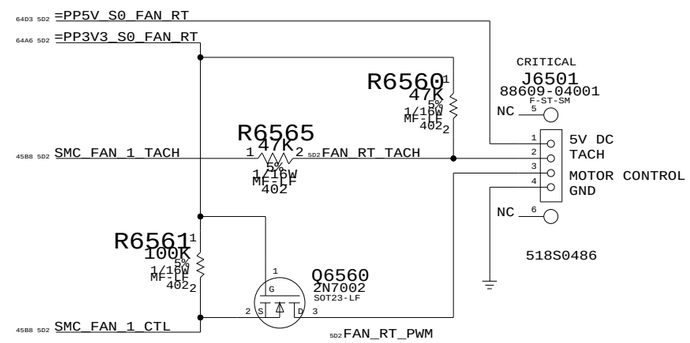

Fan

SYNC_MASTER=ENET SYNC_DATE=11/10/2005

NOTICE OF PROPRIETARY PROPERTY

THE INFORMATION CONTAINED HEREIN IS THE PROPRIETARY PROPERTY OF APPLE COMPUTER, INC. THE POSSESSOR AGREES TO THE FOLLOWING

I TO MAINTAIN THE DOCUMENT IN CONFIDENCE

II NOT TO REPRODUCE OR COPY IT

III NOT TO REVEAL OR PUBLISH IN WHOLE OR PART

APPLE COMPUTER INC.

SIZE	DRAWING NUMBER	REV.
D	051-7374	A
SCALE NONE	SHT 51 OF 79	

PAGE NOTES

INPUT

=PP3V3_S3_SMS - 3.3V POWER FOR SMS (STAYS ALIVE IN SLEEP)
SMS_ONOFF_L - CONNECT TO SMC TO BE ABLE TO PUT SMS INTO LOW-POWER MODE

OUTPUT

SMS_ACC_*_AXIS - ACCELEROMETER OUTPUT TO SCU

PAGE HISTORY

5/19/2005 - FIRST REVISION OF PAGE
7/26/2005 - REMOVED BOM TABLE AND UPDATED SYMBOL TO KXM52-2050
7/26/2005 - CONNECTED PD PIN TO SMC'S SMS_ONOFF_L
7/26/2005 -

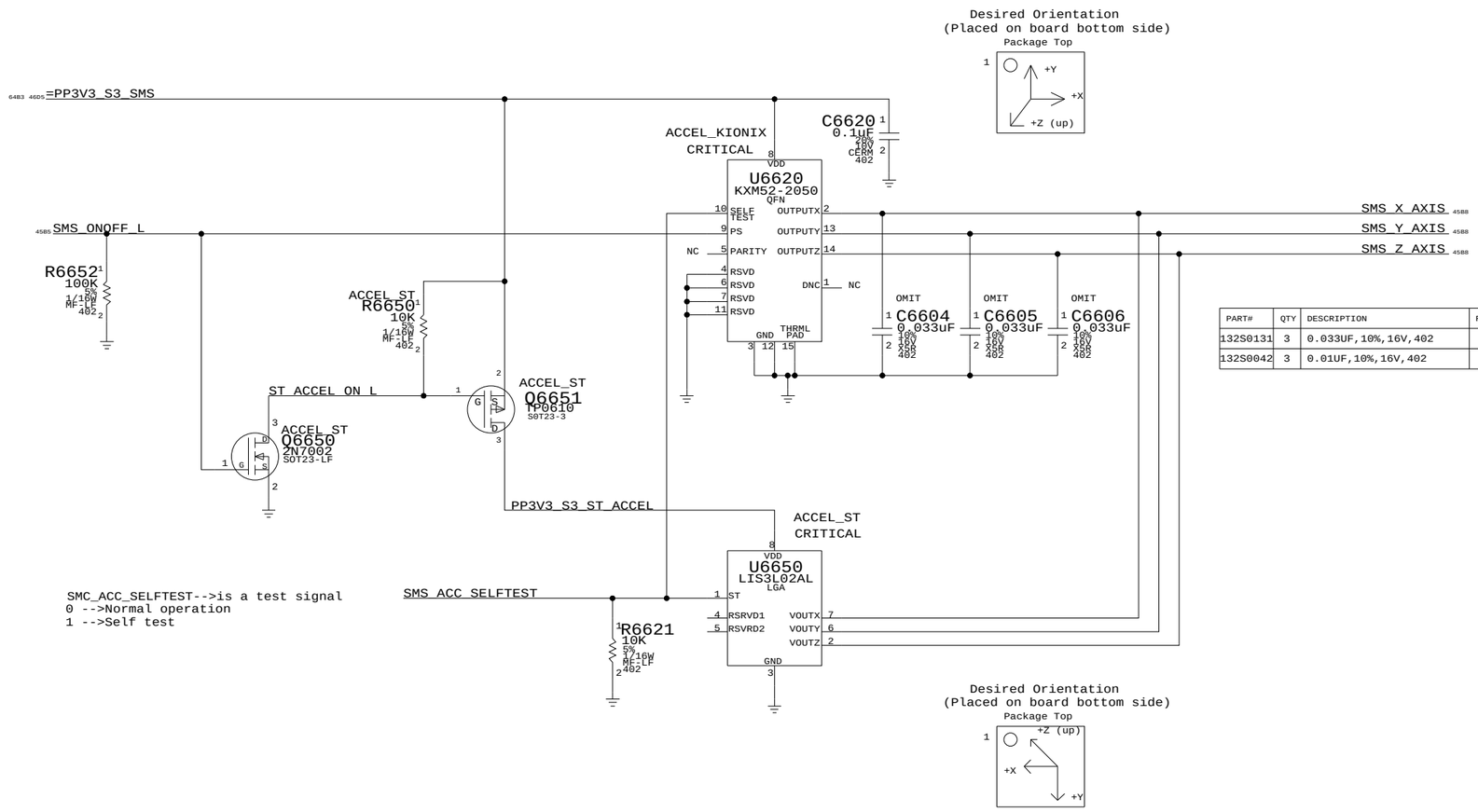

PART#	QTY	DESCRIPTION	REFERENCE DESIGNATOR(S)	CRITICAL	BOM OPTION
132S0131	3	0.033UF,10%,16V,402	C6604,C6605,C6606		ACCEL_KIONIX
132S0042	3	0.01UF,10%,16V,402	C6604,C6605,C6606		ACCEL_ST

SMS

SYNC_MASTER=SMC SYNC_DATE=08/23/2005

NOTICE OF PROPRIETARY PROPERTY

THE INFORMATION CONTAINED HEREIN IS THE PROPRIETARY PROPERTY OF APPLE COMPUTER, INC. THE POSSESSOR AGREES TO THE FOLLOWING

I TO MAINTAIN THE DOCUMENT IN CONFIDENCE
II NOT TO REPRODUCE OR COPY IT
III NOT TO REVEAL OR PUBLISH IN WHOLE OR PART

APPLE COMPUTER INC.

SIZE	DRAWING NUMBER	REV.
D	051-7374	A

SCALE NONE SHT 52 OF 79

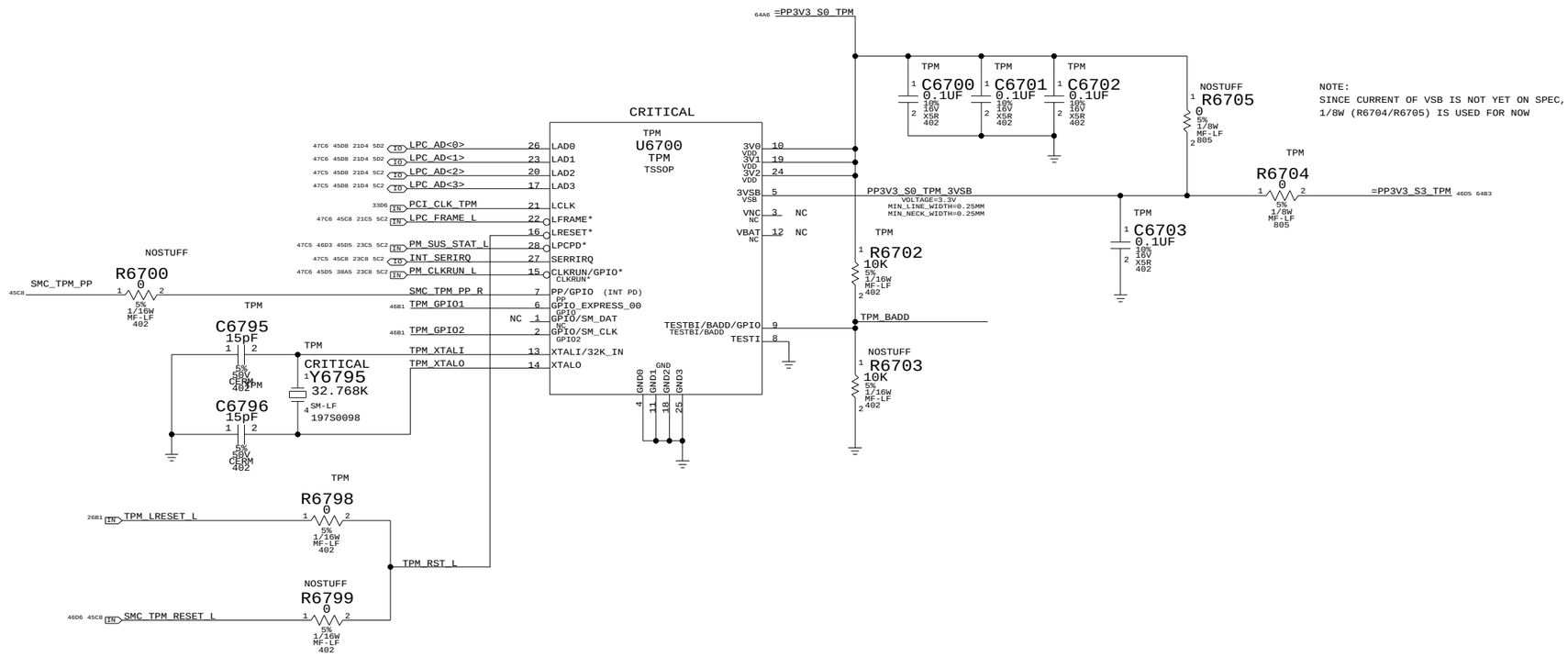

NOTE:
SINCE CURRENT OF VSB IS NOT YET ON SPEC,
1/8W (R6704/R6705) IS USED FOR NOW

TPM

SYNC_MASTER=SMC SYNC_DATE=07/18/2005

NOTICE OF PROPRIETARY PROPERTY

THE INFORMATION CONTAINED HEREIN IS THE PROPRIETARY PROPERTY OF APPLE COMPUTER, INC. THE POSSESSOR AGREES TO THE FOLLOWING

I TO MAINTAIN THE DOCUMENT IN CONFIDENCE

II NOT TO REPRODUCE OR COPY IT

III NOT TO REVEAL OR PUBLISH IN WHOLE OR PART

APPLE COMPUTER INC.

SIZE	DRAWING NUMBER	REV.
D	051-7374	A
SCALE NONE	SHT 53 OF 79	

AUDIO CODEC

APPLE P/N 353S1458

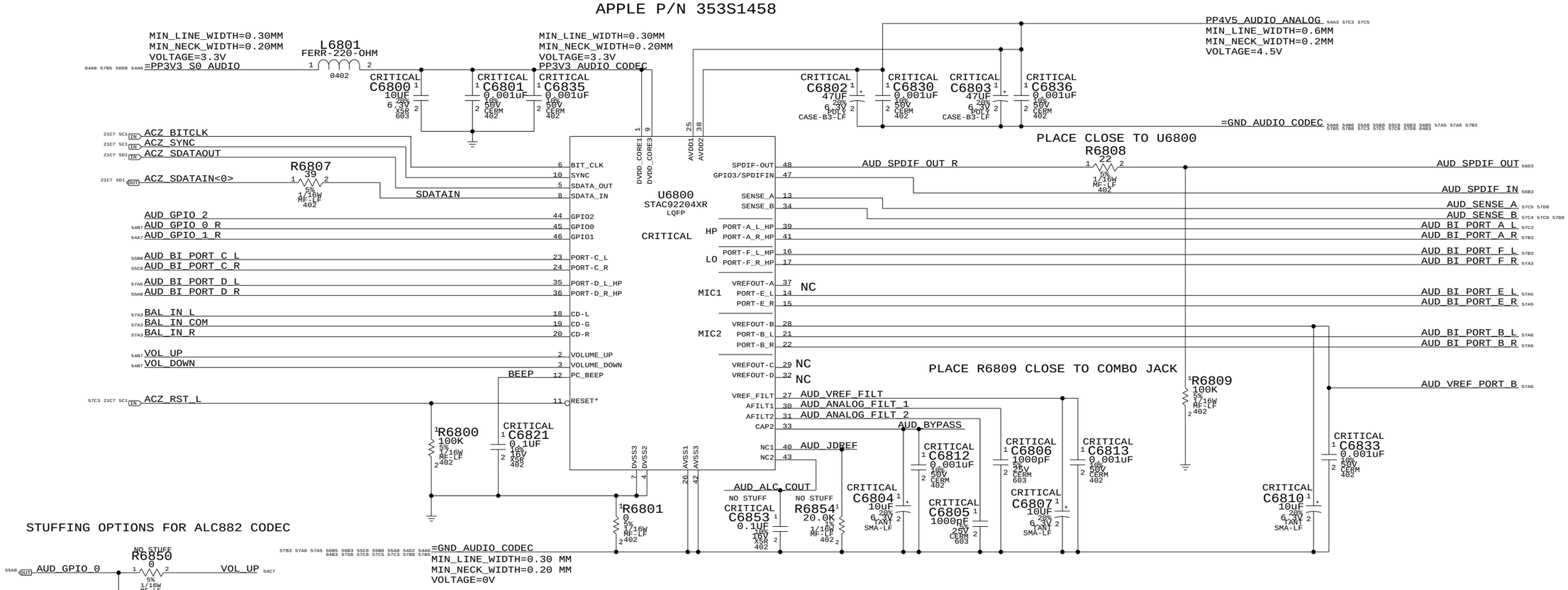

STUFFING OPTIONS FOR ALC882 CODEC

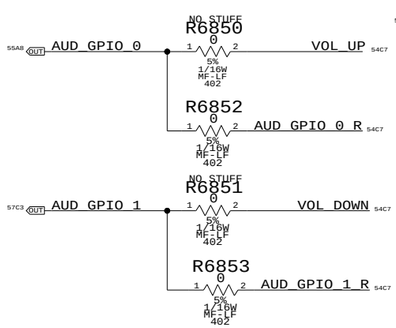

USING DC OFFSET SCREENED PART AS PRIMARY OPTION

PART NUMBER	ALTERNATE FOR PART NUMBER	BOM OPTION	REF DES	COMMENTS:
353S1345	353S1458	?	U6800	DC OFFSET SCREEN PRTS

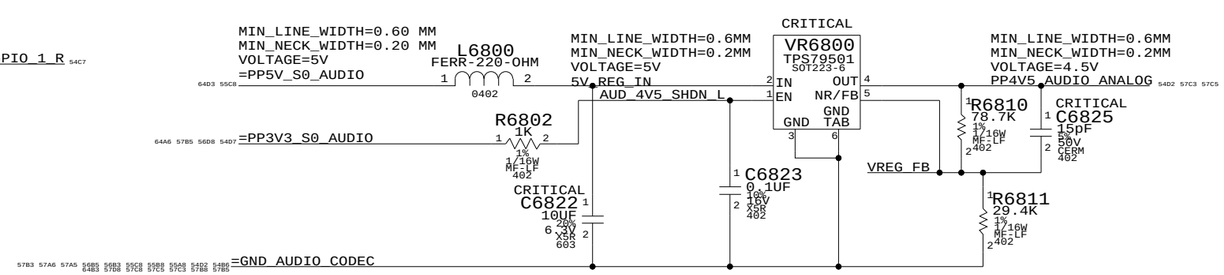

4.5V POWER SUPPLY FOR CODEC

AUDIO: CODEC

SYNC_MASTER=M42AUDIO SYNC_DATE=08/05/2006

NOTICE OF PROPRIETARY PROPERTY

THE INFORMATION CONTAINED HEREIN IS THE PROPRIETARY PROPERTY OF APPLE COMPUTER, INC. THE POSSESSOR AGREES TO THE FOLLOWING

I TO MAINTAIN THE DOCUMENT IN CONFIDENCE

II NOT TO REPRODUCE OR COPY IT

III NOT TO REVEAL OR PUBLISH IN WHOLE OR PART

APPLE COMPUTER INC.

SIZE	DRAWING NUMBER	REV.
D	051-7374	A
SCALE NONE	SHT 54 OF 79	

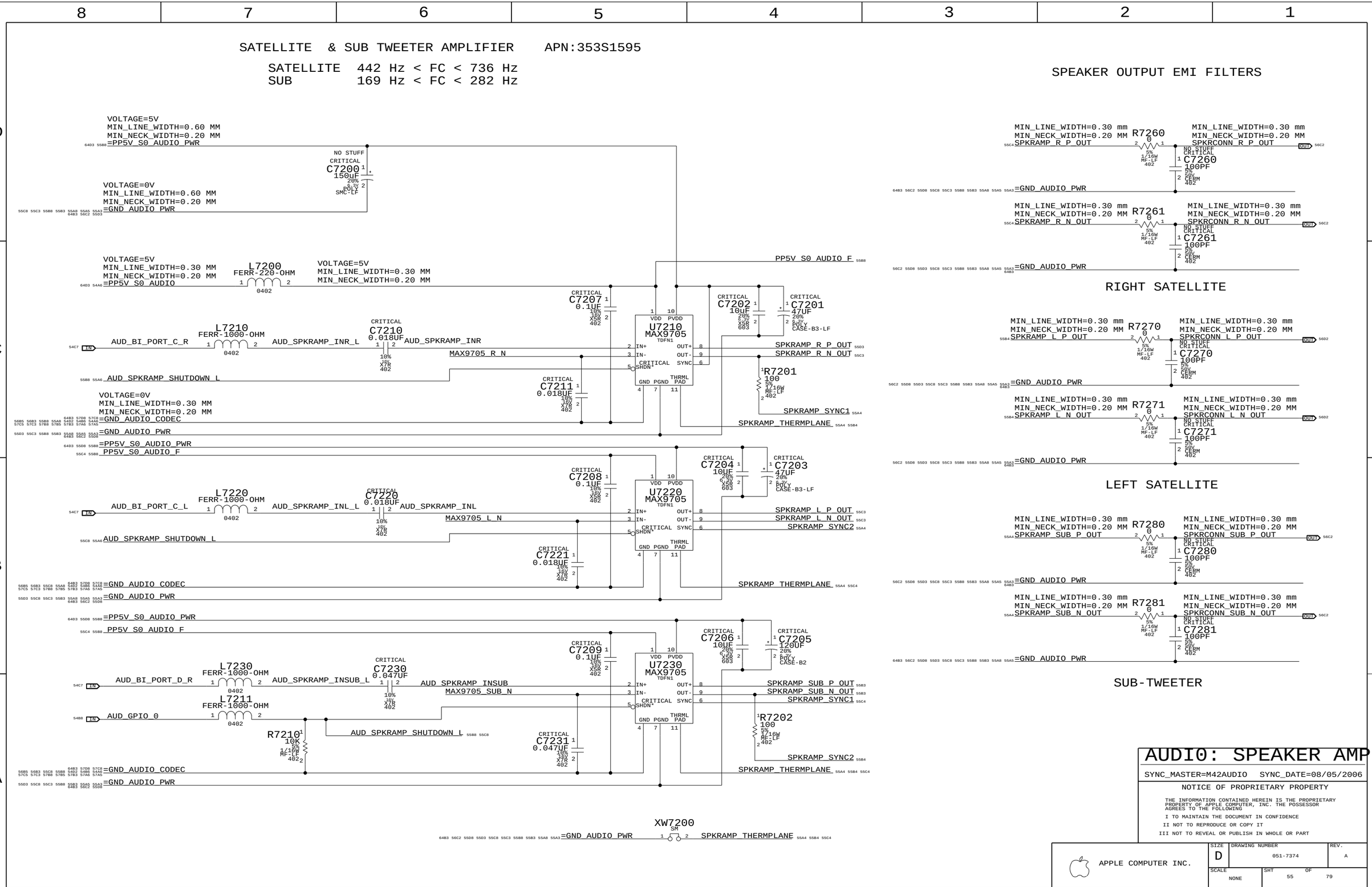

AUDIO: SPEAKER AMP

SYNC_MASTER=M42AUDIO SYNC_DATE=08/05/2006

NOTICE OF PROPRIETARY PROPERTY

THE INFORMATION CONTAINED HEREIN IS THE PROPRIETARY PROPERTY OF APPLE COMPUTER, INC. THE POSSESSOR AGREES TO THE FOLLOWING

I TO MAINTAIN THE DOCUMENT IN CONFIDENCE

II NOT TO REPRODUCE OR COPY IT

III NOT TO REVEAL OR PUBLISH IN WHOLE OR PART

APPLE COMPUTER INC.

SIZE	DRAWING NUMBER	REV.
D	051-7374	A
SCALE NONE	SHT 55 OF 79	

PART NUMBER	ALTERNATE FOR PART NUMBER	BOM OPTION	REF DES	COMMENTS:
518S0491	518S0332	?	J7302	IMPROVED TWO PIN CONNECTOR

AUDIO JACK 1: LO/HP CONNECTOR, SPDIF TX

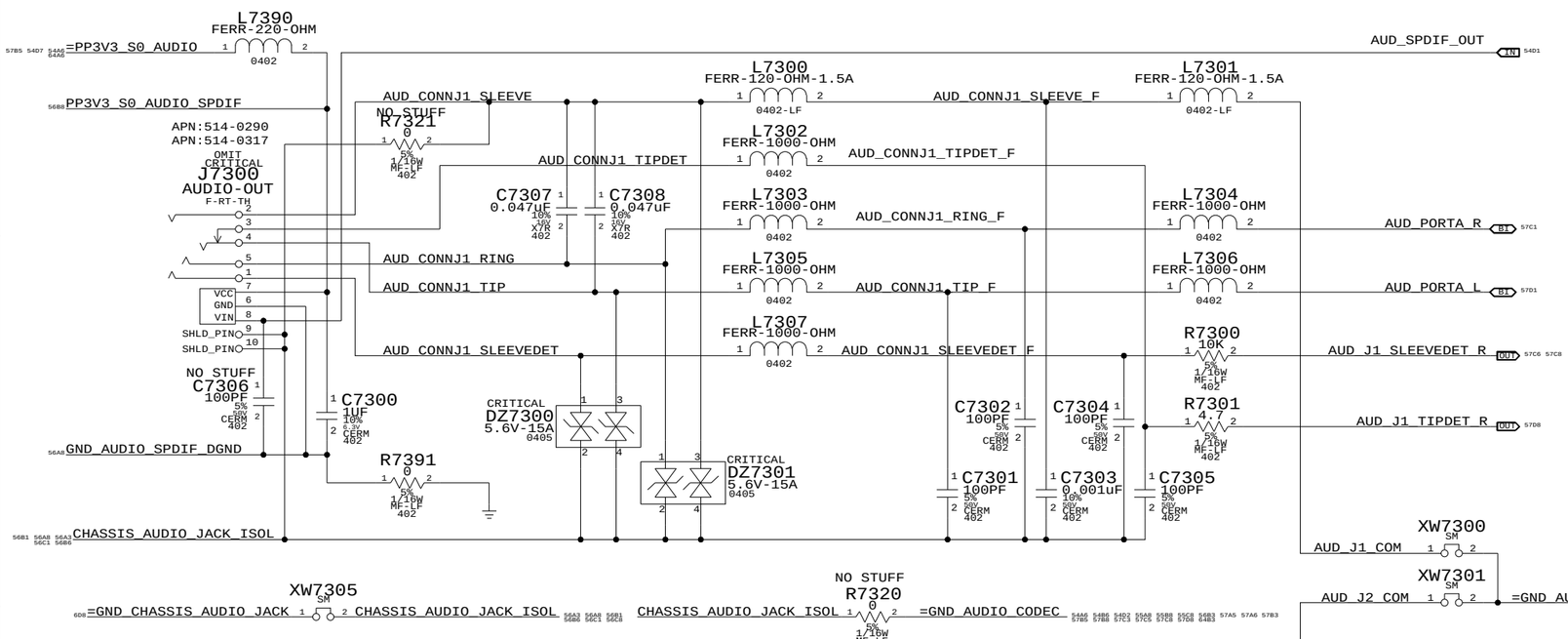

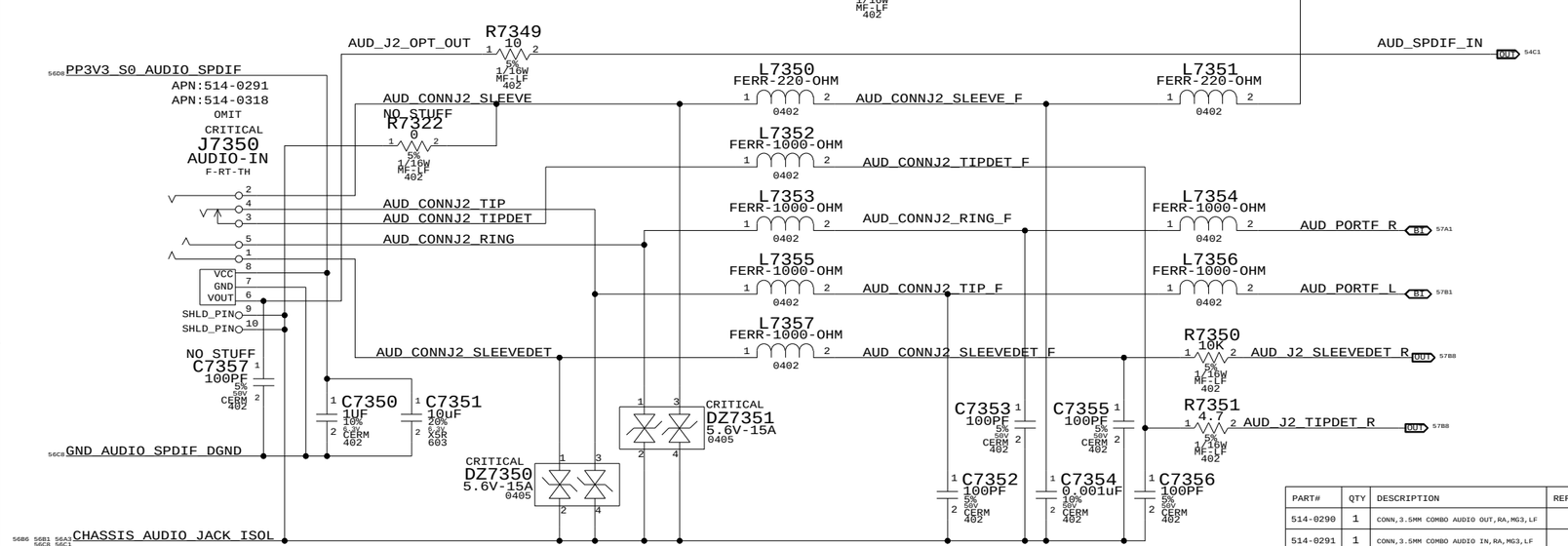

AUDIO JACK 2: LINE IN CONNECTOR, SPDIF RX

MIC CONNECTOR

APN:514S0392

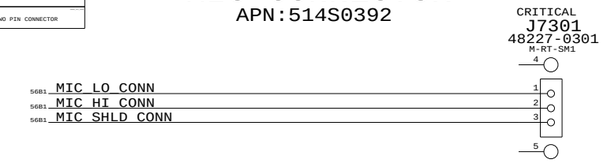

SPEAKER CONNECTOR

APN:518S0332

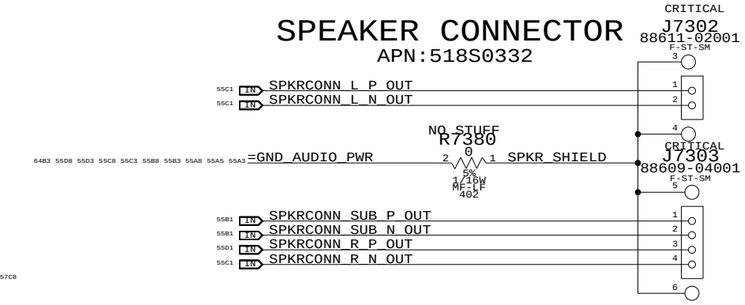

REPLACE 518S0334 WITH 518S0486

AUDIO SHIELD FILL

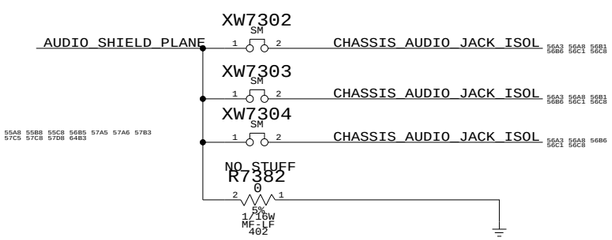

MIC EMI FILTER

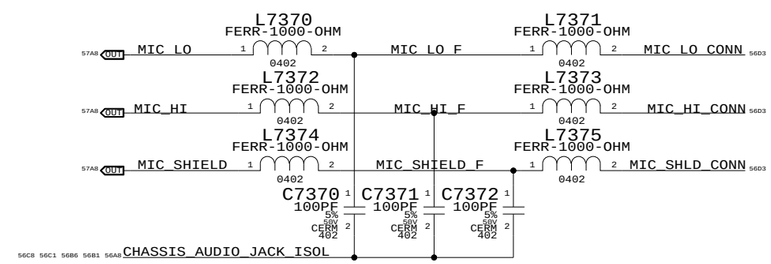

PART#	QTY	DESCRIPTION	REFERENCE DESIGNATOR(S)	CRITICAL	BOM OPTION
514-0290	1	CONN,3.5MM COMBO AUDIO OUT,RA,MG3,LF	J7300	CRITICAL	NORMAL
514-0291	1	CONN,3.5MM COMBO AUDIO IN,RA,MG3,LF	J7350	CRITICAL	NORMAL
514-0317	1	CONN,3.5MM COMBO AUDIO OUT,RA,BLACK,LF	J7300	CRITICAL	FANCY
514-0318	1	CONN,3.5MM COMBO AUDIO IN,RA,BLACK,LF	J7350	CRITICAL	FANCY

AUDIO: JACK

SYNC_MASTER=M42AUDIO SYNC_DATE=08/05/2006

NOTICE OF PROPRIETARY PROPERTY

THE INFORMATION CONTAINED HEREIN IS THE PROPRIETARY PROPERTY OF APPLE COMPUTER, INC. THE POSSESSOR AGREES TO THE FOLLOWING

I TO MAINTAIN THE DOCUMENT IN CONFIDENCE

II NOT TO REPRODUCE OR COPY IT

III NOT TO REVEAL OR PUBLISH IN WHOLE OR PART

APPLE COMPUTER INC.

SIZE	DRAWING NUMBER	REV.
D	051-7374	A
SCALE NONE	SHT 56 OF 79	

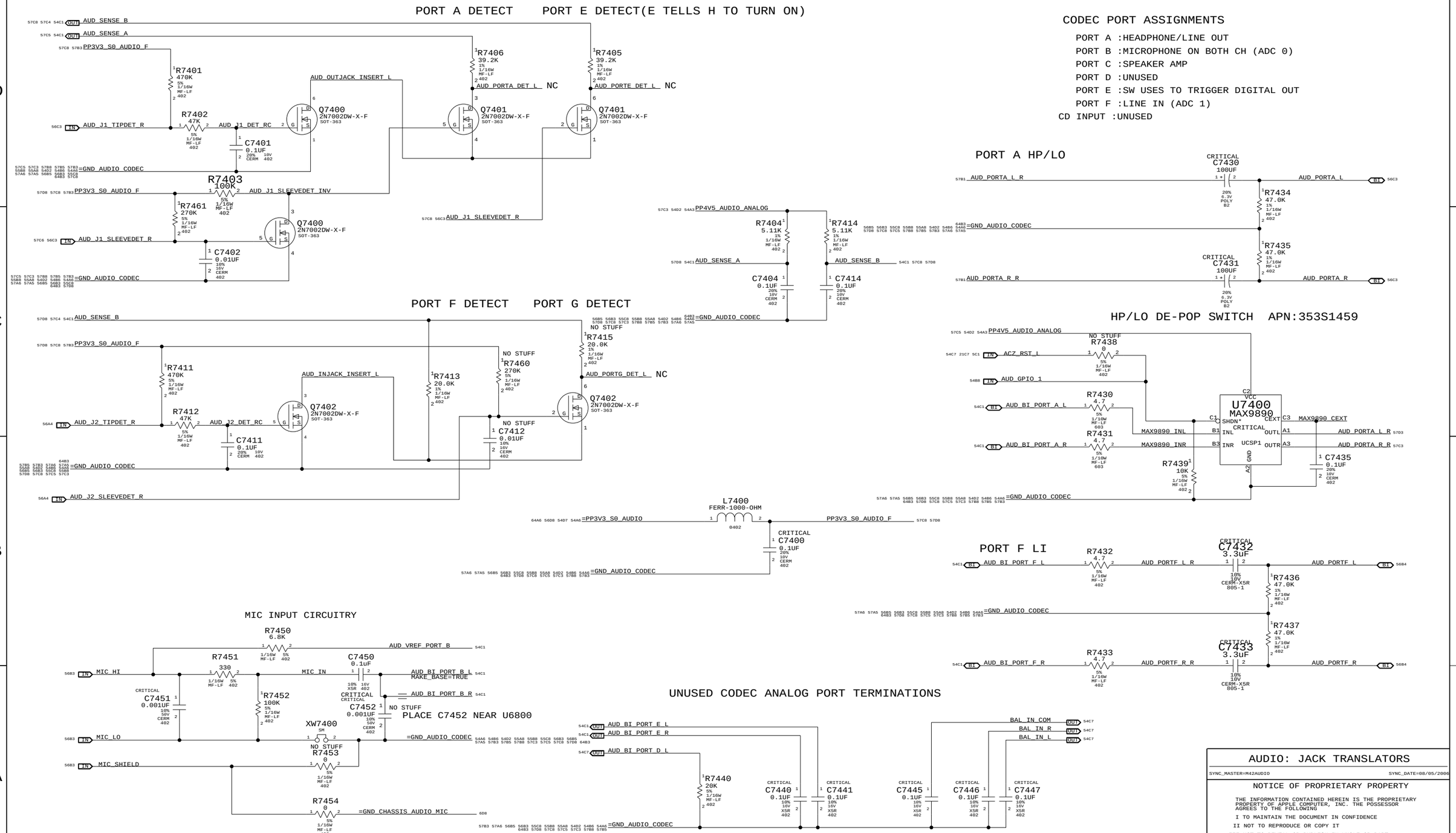

CODEC PORT ASSIGNMENTS

PORT A :HEADPHONE/LINE OUT
PORT B :MICROPHONE ON BOTH CH (ADC 0)
PORT C :SPEAKER AMP
PORT D :UNUSED
PORT E :SW USES TO TRIGGER DIGITAL OUT
PORT F :LINE IN (ADC 1)
CD INPUT :UNUSED

AUDIO: JACK TRANSLATORS

SYNC_MASTER=M42AUDIO SYNC_DATE=08/05/2006

NOTICE OF PROPRIETARY PROPERTY

THE INFORMATION CONTAINED HEREIN IS THE PROPRIETARY PROPERTY OF APPLE COMPUTER, INC. THE POSSESSOR AGREES TO THE FOLLOWING

I TO MAINTAIN THE DOCUMENT IN CONFIDENCE
II NOT TO REPRODUCE OR COPY IT
III NOT TO REVEAL OR PUBLISH IN WHOLE OR PART

APPLE COMPUTER INC.

SIZE	DRAWING NUMBER	REV.
D	051-7374	A
SCALE NONE	SHT 57 OF 79	

PART NUMBER	ALTERNATE FOR PART NUMBER	BOM OPTION	REF DES	COMMENTS:
128S0093	128S0092	?	C7501,C7508	KEMET T520V336M016ATE0457650
128S0093	128S0092	?	C7509,C7517	KEMET T520V336M016ATE0457650

DPRSLPVR	DPRSTP*	PSI*	Operation Mode
0	1	1	2-Phase CCM
0	1	0	1-Phase CCM
1	0	1	1-Phase DCM
1	0	0	1-Phase DCM

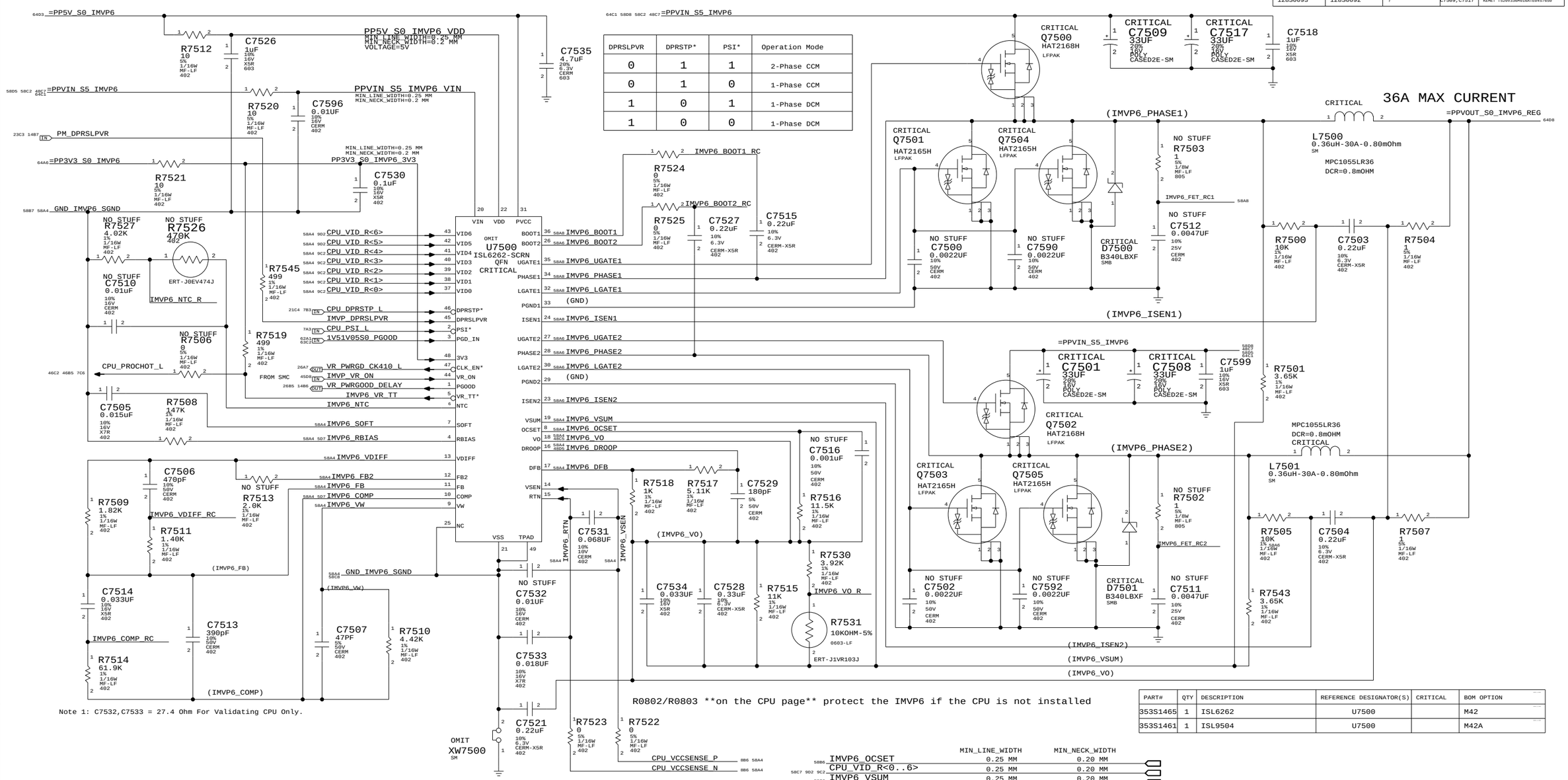

PART#	QTY	DESCRIPTION	REFERENCE DESIGNATOR(S)	CRITICAL	BOM OPTION
353S1465	1	ISL6262	U7500		M42
353S1461	1	ISL9504	U7500		M42A

IMVP6 CPU VCORE REGULATOR

	MIN_LINE_WIDTH	MIN_NECK_WIDTH
IMVP6_PHASE1	1.5 MM	0.25 MM
IMVP6_BOOT1	0.25 MM	0.25 MM
IMVP6_UGATE1	1.5 MM	0.25 MM
IMVP6_LGATE1	1.5 MM	0.25 MM
IMVP6_ISEN1	0.25 MM	0.25 MM
IMVP6_FET_RC1	0.25 MM	0.25 MM
IMVP6_VSUM_R1	0.25 MM	0.25 MM
IMVP6_VO_R1	0.25 MM	0.25 MM

	MIN_LINE_WIDTH	MIN_NECK_WIDTH
IMVP6_PHASE2	0.25 MM	0.25 MM
IMVP6_BOOT2	0.25 MM	0.25 MM
IMVP6_UGATE2	0.25 MM	0.25 MM
IMVP6_LGATE2	0.25 MM	0.25 MM
IMVP6_ISEN2	0.25 MM	0.25 MM
IMVP6_FET_RC2	0.25 MM	0.25 MM
IMVP6_VSUM_R2	0.25 MM	0.25 MM
IMVP6_VO_R2	0.25 MM	0.25 MM

	MIN_LINE_WIDTH	MIN_NECK_WIDTH
IMVP6_OCSET	0.25 MM	0.20 MM
CPU_VID_R<0..6>	0.25 MM	0.20 MM
IMVP6_VSUM	0.25 MM	0.20 MM
GND_IMVP6_SGND	0.50 MM	0.20 MM
IMVP6_VO	0.25 MM	0.20 MM
IMVP6_DROOP	0.25 MM	0.20 MM
IMVP6_DFB	0.25 MM	0.20 MM
IMVP6_SOFT	0.25 MM	0.20 MM
IMVP6_RBIAS	0.25 MM	0.20 MM
IMVP6_VDIFF	0.25 MM	0.20 MM
IMVP6_FB2	0.25 MM	0.20 MM
IMVP6_FB	0.25 MM	0.20 MM
IMVP6_COMP	0.25 MM	0.20 MM
IMVP6_VW	0.25 MM	0.25 MM
CPU_VCCSENSE_P	0.25 MM	0.25 MM
CPU_VCCSENSE_N	0.25 MM	0.25 MM
IMVP6_RTN	0.25 MM	0.25 MM
IMVP6_VSEN	0.25 MM	0.25 MM

IMVP6 CPU VCore Regulator

SYNC_MASTER=POWER SYNC_DATE=07/13/2005

NOTICE OF PROPRIETARY PROPERTY

THE INFORMATION CONTAINED HEREIN IS THE PROPRIETARY PROPERTY OF APPLE COMPUTER, INC. THE POSSESSOR AGREES TO THE FOLLOWING

I TO MAINTAIN THE DOCUMENT IN CONFIDENCE
II NOT TO REPRODUCE OR COPY IT
III NOT TO REVEAL OR PUBLISH IN WHOLE OR PART

APPLE COMPUTER INC.

SIZE	DRAWING NUMBER	REV.
D	051-7374	A
SCALE NONE	SHT 58 OF 79	

5V/3.3V POWER SUPPLY

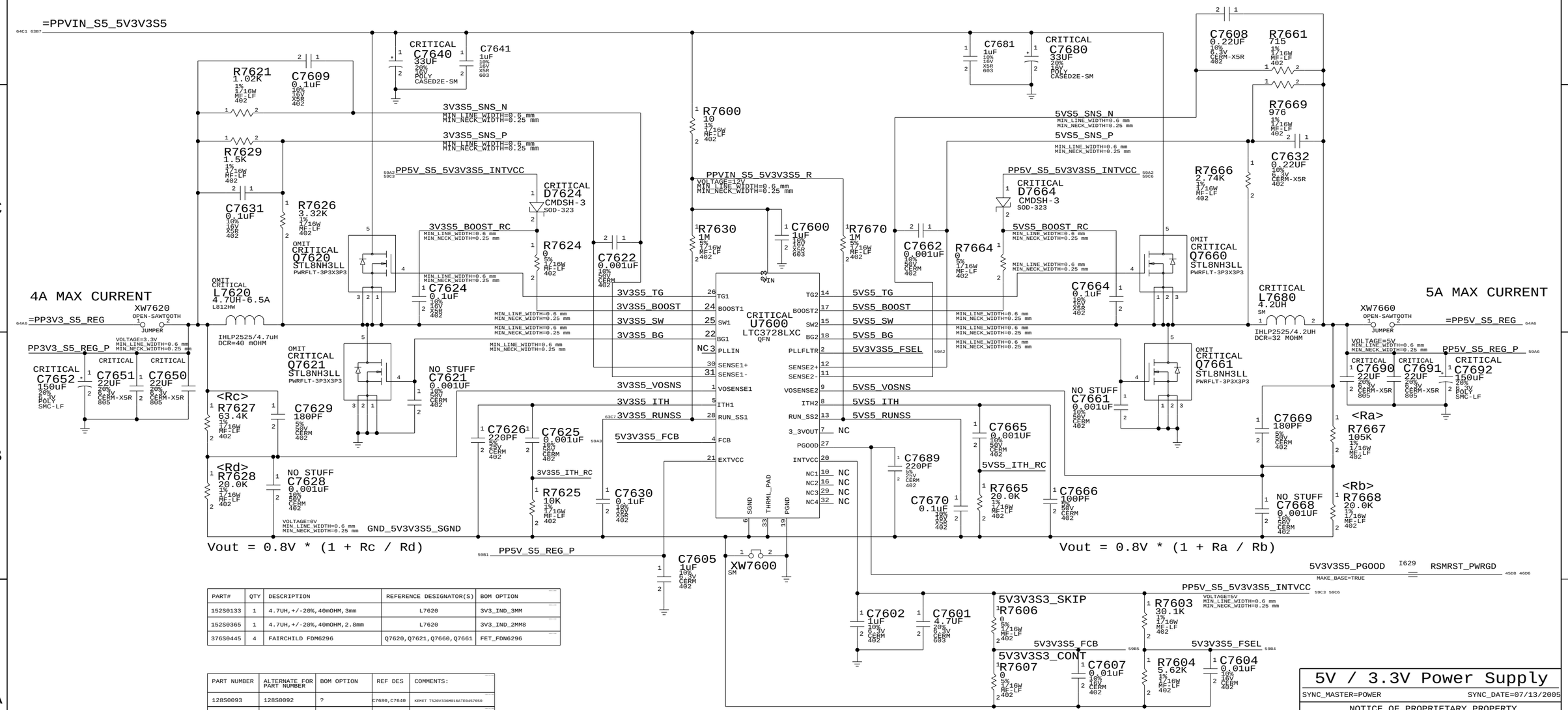

PART#	QTY	DESCRIPTION	REFERENCE DESIGNATOR(S)	BOM OPTION
152S0133	1	4.7UH,+/-20%,40mOHM,3mm	L7620	3V3_IND_3MM
152S0365	1	4.7UH,+/-20%,40mOHM,2.8mm	L7620	3V3_IND_2MM8
376S0445	4	FAIRCHILD FDM6296	Q7620,Q7621,Q7660,Q7661	FET_FDN6296

PART NUMBER	ALTERNATE FOR PART NUMBER	BOM OPTION	REF DES	COMMENTS:
128S0093	128S0092	?	C7680,C7640	KEMET T520V336M016ATE045 7650
376S0448	376S0445	?	Q7620,Q7621	VISHAY SI7806ADN
376S0448	376S0445	?	Q7660,Q7661	VISHAY SI7806ADN

5V / 3.3V Power Supply

SYNC_MASTER=POWER SYNC_DATE=07/13/2005

NOTICE OF PROPRIETARY PROPERTY

THE INFORMATION CONTAINED HEREIN IS THE PROPRIETARY PROPERTY OF APPLE COMPUTER, INC. THE POSSESSOR AGREES TO THE FOLLOWING

I TO MAINTAIN THE DOCUMENT IN CONFIDENCE

II NOT TO REPRODUCE OR COPY IT

III NOT TO REVEAL OR PUBLISH IN WHOLE OR PART

APPLE COMPUTER INC.

SIZE	DRAWING NUMBER	REV.
D	051-7374	A
SCALE NONE	SHT 59 OF 79	

YUKON POWER CONTROL

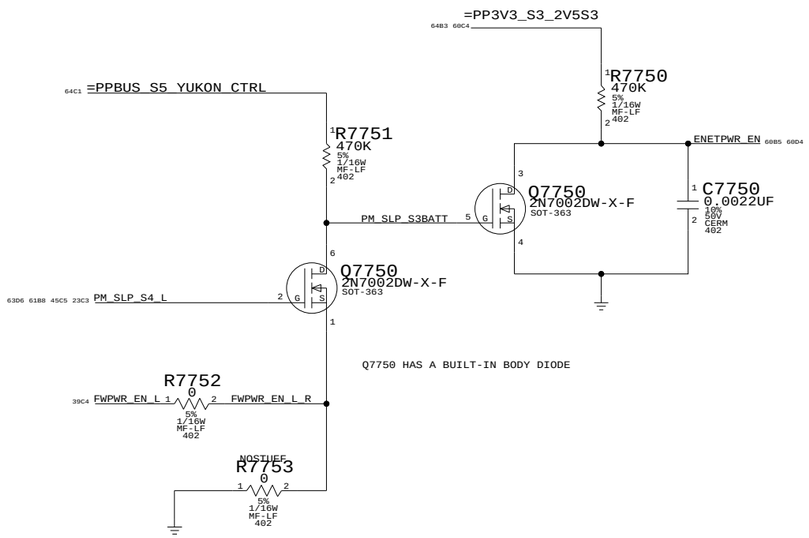

NAME	PM_SLP_S4_L	FWPWR_EN_L	PM_SLP_S3BATT	ENETPWR_EN
LOGIC	S3 | S0	~S0 | ~SMC_PS_ON		POWER YUKON
S3 ON BATTERY	TRUE (3.3V)	TRUE (PBUS 12.6V)	TRUE (PBUS 12.6V)	FALSE (0V)
S0 OR S3 ON AC	TRUE (3.3V)	FALSE (0V)	FALSE (0V)	TRUE (3.3V)
S5 ON AC	FALSE (0V)	TRUE (PBUS 12.6V)	TRUE (PBUS 12.6V)	FALSE (0V)
S5 ON BATT	FALSE (0V)	FALSE (0V)	TRUE (PBUS 12.6V)	FALSE (0V)

NOTE: IF CHANGE TO STUFFING R7753 THEN ENETPWR_EN IS BUFFERED PM_SLP_S4_L

2.5V REGULATORS

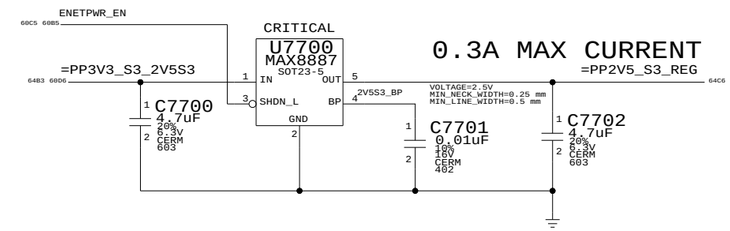

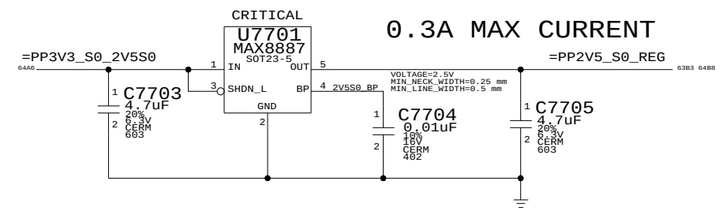

1.2V REGULATOR

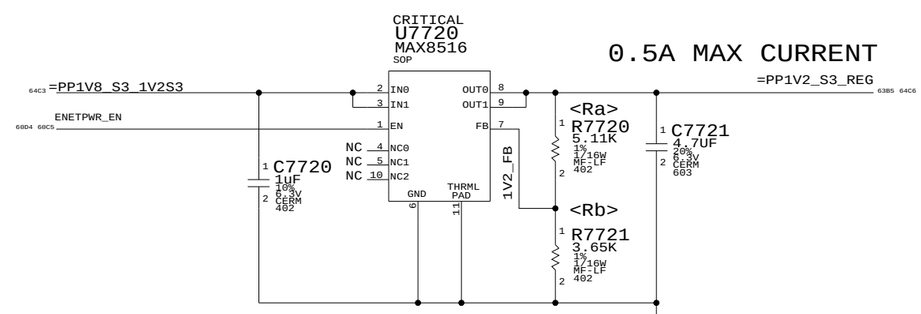

Vout = 0.5V * (1 + Ra / Rb)

2.5V/1.2V Regulator

SYNC_MASTER=ENET SYNC_DATE=12/06/2005

NOTICE OF PROPRIETARY PROPERTY

THE INFORMATION CONTAINED HEREIN IS THE PROPRIETARY PROPERTY OF APPLE COMPUTER, INC. THE POSSESSOR AGREES TO THE FOLLOWING

I TO MAINTAIN THE DOCUMENT IN CONFIDENCE

II NOT TO REPRODUCE OR COPY IT

III NOT TO REVEAL OR PUBLISH IN WHOLE OR PART

APPLE COMPUTER INC.

SIZE	DRAWING NUMBER	REV.
D	051-7374	A
SCALE NONE	SHT 60 OF 79	

1.8V POWER SUPPLY

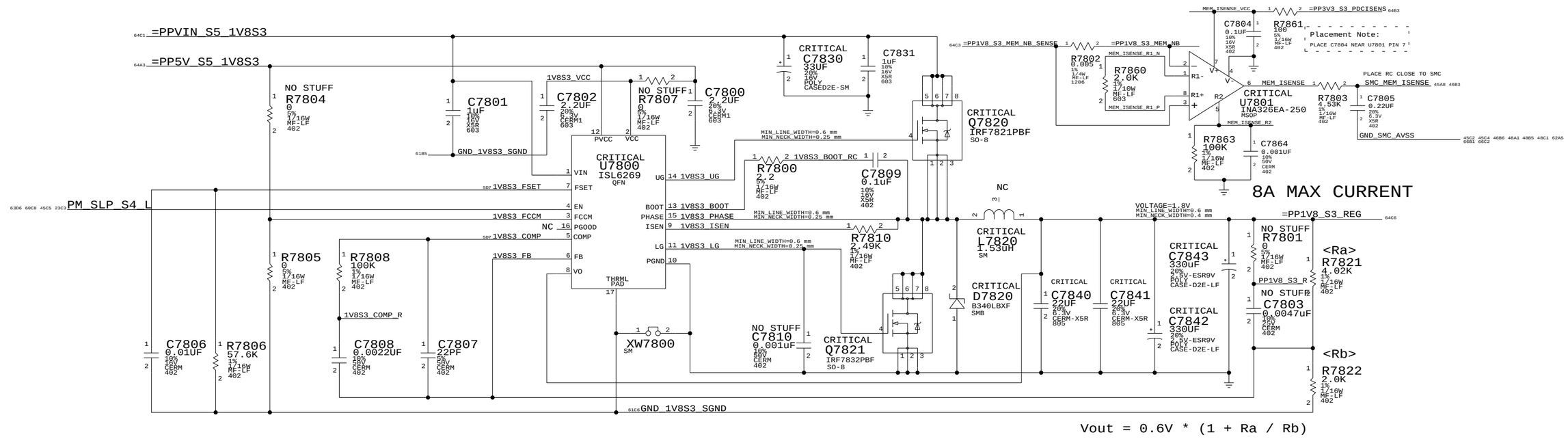

PART NUMBER	ALTERNATE FOR PART NUMBER	BOM OPTION	REF DES	COMMENTS:
128S0093	128S0092	?	C7830	KEMET T520V336M016ATE045/7650

PART NUMBER	ALTERNATE FOR PART NUMBER	BOM OPTION	REF DES	COMMENTS:
128S0094	128S0060	?	C7842,C7843	PANASONIC EEFSX0D331ER
128S0095	128S0060	?	C7842,C7843	PANASONIC EEFSX0D331XE

1.8V Supply

SYNC_MASTER=POWER SYNC_DATE=07/13/2005

NOTICE OF PROPRIETARY PROPERTY

THE INFORMATION CONTAINED HEREIN IS THE PROPRIETARY PROPERTY OF APPLE COMPUTER, INC. THE POSSESSOR AGREES TO THE FOLLOWING

I TO MAINTAIN THE DOCUMENT IN CONFIDENCE

II NOT TO REPRODUCE OR COPY IT

III NOT TO REVEAL OR PUBLISH IN WHOLE OR PART

APPLE COMPUTER INC.

SIZE	DRAWING NUMBER	REV.
D	051-7374	A
SCALE NONE	SHT 61 OF 79	

1.5V/1.05V POWER SUPPLY

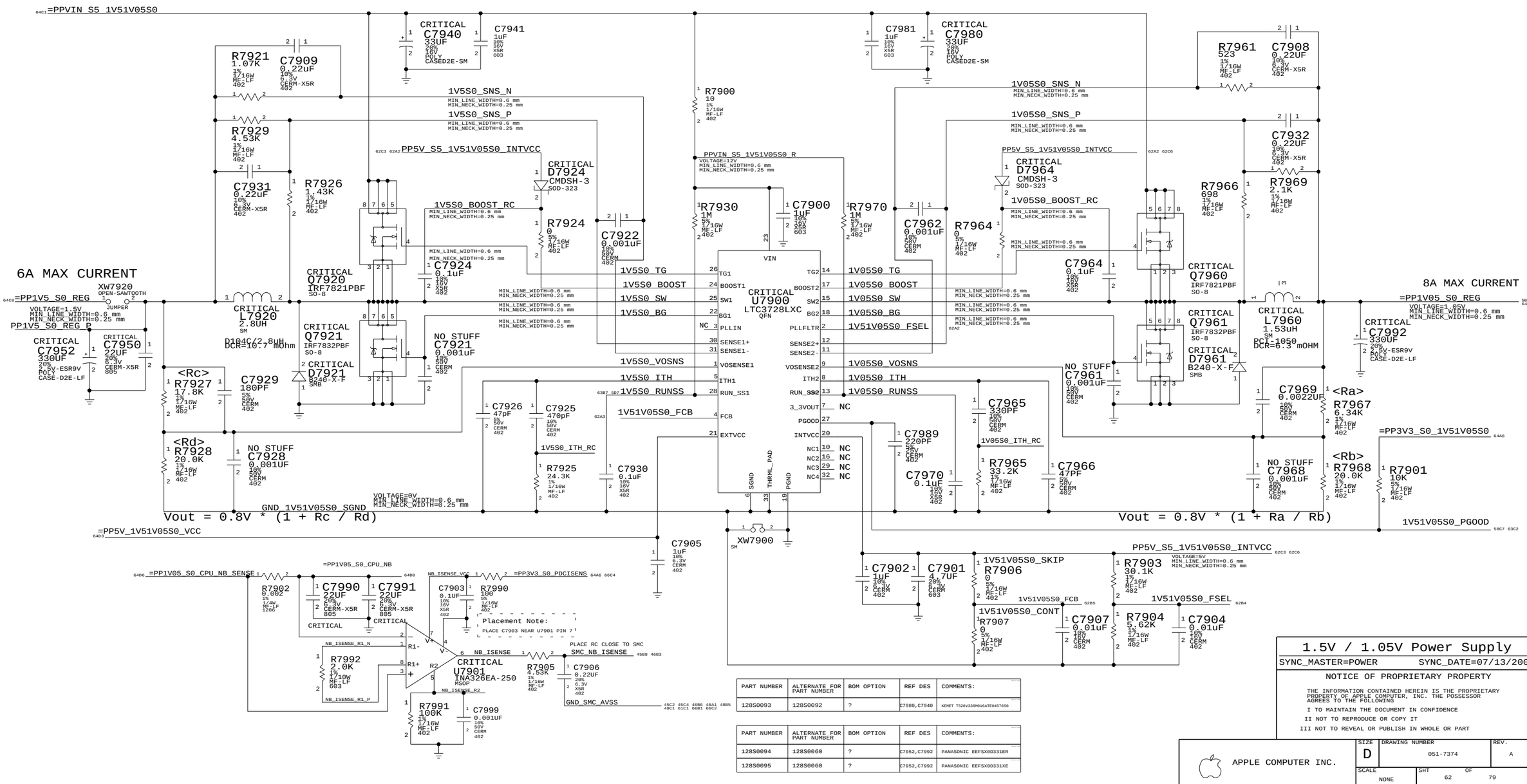

PART NUMBER	ALTERNATE FOR PART NUMBER	BOM OPTION	REF DES	COMMENTS:
128S0093	128S0092	?	C7980,C7940	KEMET T520V336M016ATE045765D

PART NUMBER	ALTERNATE FOR PART NUMBER	BOM OPTION	REF DES	COMMENTS:
128S0094	128S0060	?	C7952,C7992	PANASONIC EEFSX0D331ER
128S0095	128S0060	?	C7952,C7992	PANASONIC EEFSX0D331XE

1.5V / 1.05V Power Supply

SYNC_MASTER=POWER SYNC_DATE=07/13/2005

NOTICE OF PROPRIETARY PROPERTY

THE INFORMATION CONTAINED HEREIN IS THE PROPRIETARY PROPERTY OF APPLE COMPUTER, INC. THE POSSESSOR AGREES TO THE FOLLOWING

I TO MAINTAIN THE DOCUMENT IN CONFIDENCE

II NOT TO REPRODUCE OR COPY IT

III NOT TO REVEAL OR PUBLISH IN WHOLE OR PART

APPLE COMPUTER INC.

SIZE	DRAWING NUMBER	REV.
D	051-7374	A
SCALE NONE	SHT 62 OF 79	

POWER CONTROL SIGNALS

These rails are monitored by LTC2908

State	SMC_PM_G2_ENABLE	PM_SLP_S4_L	PM_SLP_S3_L
Run (S0)	1	1	1
Sleep (S3)	1	1	0
Soft-Off (S5)	1	0	0
Battery Off (G3Hot)	0	0	0

5V/3.3V S5 RUN/SS CONTROL

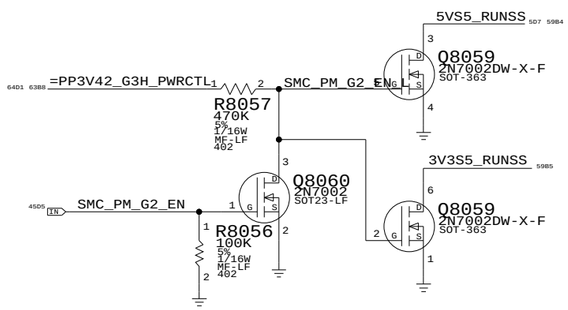

1.5V/1.05V S0 RUN/SS CONTROL

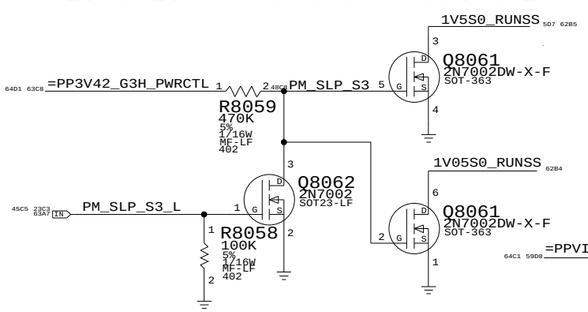

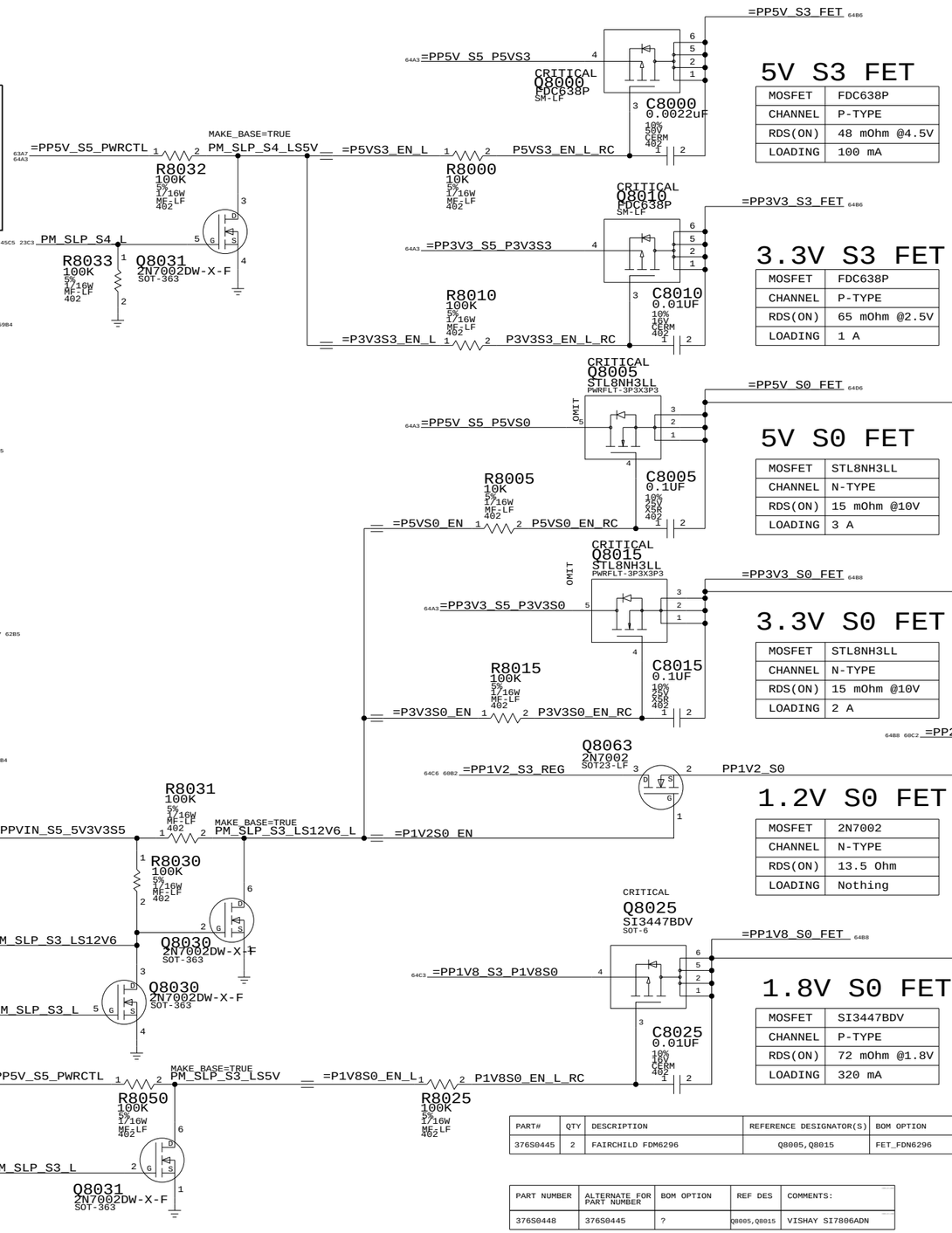

5V S3 FET

MOSFET	FDC638P
CHANNEL	P-TYPE
RDS(ON)	48 mOhm @4.5V
LOADING	100 mA

3.3V S3 FET

MOSFET	FDC638P
CHANNEL	P-TYPE
RDS(ON)	65 mOhm @2.5V
LOADING	1 A

5V S0 FET

MOSFET	STL8NH3LL
CHANNEL	N-TYPE
RDS(ON)	15 mOhm @10V
LOADING	3 A

3.3V S0 FET

MOSFET	STL8NH3LL
CHANNEL	N-TYPE
RDS(ON)	15 mOhm @10V
LOADING	2 A

1.2V S0 FET

MOSFET	2N7002
CHANNEL	N-TYPE
RDS(ON)	13.5 Ohm
LOADING	Nothing

1.8V S0 FET

MOSFET	SI3447BDV
CHANNEL	P-TYPE
RDS(ON)	72 mOhm @1.8V
LOADING	320 mA

3.425V "G3Hot" SUPPLY

Supply needs to guarantee 3.31V delivered to SMC VRef generator

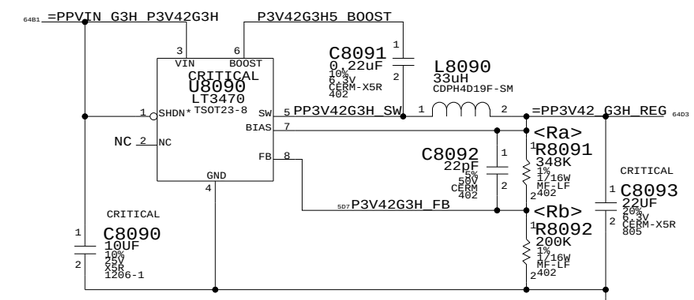

Vout = 1.25V * (1 + Ra / Rb)

ALL SYSTEM PWRGD CIRCUIT

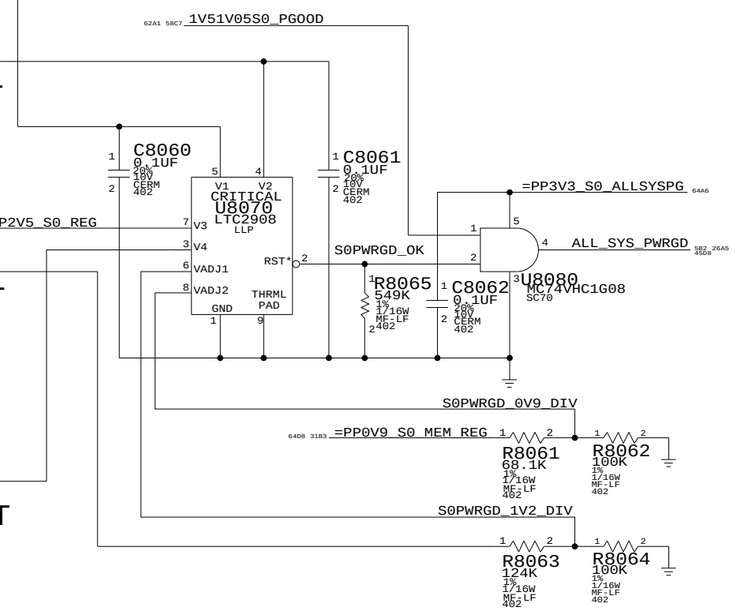

PART#	QTY	DESCRIPTION	REFERENCE DESIGNATOR(S)	BOM OPTION
376S0445	2	FAIRCHILD FDM6296	Q8005,Q8015	FET_FDN6296

PART NUMBER	ALTERNATE FOR PART NUMBER	BOM OPTION	REF DES	COMMENTS:
376S0448	376S0445	?	Q8005,Q8015	VISHAY SI7806ADN

S3/S0 FETS, G3H SUPPLY

SYNC_MASTER=ENET SYNC_DATE=08/30/2005

NOTICE OF PROPRIETARY PROPERTY

THE INFORMATION CONTAINED HEREIN IS THE PROPRIETARY PROPERTY OF APPLE COMPUTER, INC. THE POSSESSOR AGREES TO THE FOLLOWING

I TO MAINTAIN THE DOCUMENT IN CONFIDENCE

II NOT TO REPRODUCE OR COPY IT

III NOT TO REVEAL OR PUBLISH IN WHOLE OR PART

APPLE COMPUTER INC.

SIZE	DRAWING NUMBER	REV.
D	051-7374	A

SCALE NONE SHT 63 OF 79

"S0" RAILS ONLY ON IN RUN

PPVCORE_CPU_S0 (5B2)
MAKE_BASE=TRUE
MIN_LINE_WIDTH=0.5MM
MIN_NECK_WIDTH=0.4MM
VOLTAGE=0.9V
- (REGULATOR OUTPUT CPU VCORE PWR) =PPVOUT_S0_IMVP6_REG (58D1)
- (CPU VCORE PWR) =PPVCORE_S0_CPU (8B5 8D7 9B8 48A5 48B3)

PP0V9_S0 (5A2)
MAKE_BASE=TRUE
MIN_LINE_WIDTH=0.5MM
MIN_NECK_WIDTH=0.4MM
VOLTAGE=0.9V
- (LDO OUTPUT 0.9V PWR) =PP0V9_S0_MEM_REG (63B2 31B3)
- (DDR2 TERMINATION 0.9V PWR) =PP0V9_S0_MEM_TERM (30D4)

PP1V05_S0 (5B2)
MAKE_BASE=TRUE
MIN_LINE_WIDTH=0.6MM
MIN_NECK_WIDTH=0.4MM
VOLTAGE=1.05V
- (REGULATOR OUTPUT 1.05V PWR) =PP1V05_S0_REG (62B1 5B2)
- (ICH CPU I/O 1.05V PWR) =PP1V05_S0_SB_CPU_IO (21C1 24C3 25C4)
- (ICH VCORE 1.05V PWR) =PPVCORE_S0_SB (24D3 25D3)
- =PP1V05_S0_CPU_NB_SENSE (62A8)

PP1V05_S0_CPU_NB
MAKE_BASE=TRUE
MIN_LINE_WIDTH=0.6MM
MIN_NECK_WIDTH=0.4MM
VOLTAGE=1.05V
- =PP1V05_S0_CPU_NB (62A6)
- (MCH CORE 1.05V PWR) =PPVCORE_S0_NB (16C8 16D3 19C8 19D7)
- (CPU FSB 1.05V PWR) =PP1V05_S0_CPU (7B5 7B6 7D5 8C7 9C8 11B3 11C5)
- (MCH FSB 1.05V PWR) =PP1V05_S0_FSB_NB (12A7 12B7 12C2 19D7 33B8 33C7 33C8)
- =PP1V05_S0_NB_VTT (17D3 19B5 19D7)
- (MCH FSB 1.05V PWR) =PP1V05_S0_NB (19D1 19D7)

PP1V5_S0 (5B2)
MAKE_BASE=TRUE
MIN_LINE_WIDTH=0.6MM
MIN_NECK_WIDTH=0.4MM
VOLTAGE=1.5V
- (REGULATOR OUTPUT 1.5V PWR) =PP1V5_S0_REG (62B8)
- (CPU AVDD 1.5V PWR) =PP1V5_S0_CPU (8B7 9D8)
- (MCH PCIE GRAPHICS O/P COMPENSATION 1.5V PWR) =PP1V5_S0_NB_PCIE (13D2 19D7)
- (MCH DDR DLL&IO, FSB HSIO&IO PWR 1.5V) =PP1V5_S0_NB_VCCAUX (16D1 17B6 19B6 19D7)
- (MCH DIGITAL DIVIDER IN HMPLL 1.5V PWR) =PP1V5_S0_NB_VCCD_HMPLL (17C6 19D7)
- (MCH LVDS DIGITAL 1.5V PWR) =PP1V5_S0_NB_VCCD_LVDS (17C6 19B8 19D7)
- (HOST/MEMORY PLL 1.5V PWR) =PP1V5_S0_NB_PLL (19C6 19D7)
- =PP1V5_S0_NB (19C1 19D7)
- (MCH TVDAC DEDICATED/QUIET PWR 1.5V) =PP1V5_S0_NB_TVDAC (19A8 19D7)
- (MCH 3GIO[PCIE/DMI] 1.5V PWR) =PP1V5_S0_NB_3G (19B5)
- (MCH 3GIO PLL 1.5V PWR) =PP1V5_S0_NB_3GPLL (19A5)
- (ICH LOGIC&IO[ARX] 1.5V PWR) =PP1V5_S0_SB_VCC1_5_A_ARX (24B5 25D6)
- (ICH SATA PLL 1.5V PWR) =PP1V5_S0_SB_VCCSATAPLL (24B5 25D6) (61C2 29D2 28D2 19D7 16B6 14C2)
- (ICH LOGIC&IO[ATX] 1.5V PWR) =PP1V5_S0_SB_VCC1_5_A_ATX (24A5 25C6)
- (ICH USB PLL 1.5V PWR) =PP1V5_S0_SB_VCCUSBPLL (24A5 25B6)
- (ICH USB CORE 1.5V PWR) =PP1V5_S0_SB_VCC1_5_A_USB_CORE (24A3 25B2)
- (ICH LOGIC&IO 1.5V PWR) =PP1V5_S0_SB_VCC1_5_A (24A3 25C2)
- =PP1V5_S0_SB (25A8 25C8)
- (WIRELESS CARD 1.5V PWR) =PP1V5_S0_AIRPORT (43D3)

PP1V8_S0 (5B2)
MAKE_BASE=TRUE
MIN_LINE_WIDTH=0.6MM
MIN_NECK_WIDTH=0.4MM
VOLTAGE=1.8V
- (COME FROM S3 TO S0 MOSFET) =PP1V8_S0_FET (63B3)
- (DDR2 TERMINATION REGULATOR 1.8V SWITCH PWR)
- (TMDS 1.8V PWR) =PP1V8_S0_TMDS (68D6)

PP2V5_S0 (5B2)
MAKE_BASE=TRUE
MIN_LINE_WIDTH=0.5 mm
MIN_NECK_WIDTH=0.25 mm
VOLTAGE=2.5V
- (COME FROM S3 TO S0 MOSFET) =PP2V5_S0_REG (63B3 66C2)
- (MCH H/V SYNC 2.5V PWR) =PP2V5_S0_NB_VCCSYNC (17D6 19B6 19D7)
- (MCH LVDS DATA/CLK TX 2.5V PWR) =PP2V5_S0_NB_VCC_TXLVDS (17D6 19B8 19D7)
- (MCH PCIE/DMI BAND GAP 2.5V PWR) =PP2V5_S0_NB_VCCA_3GBG (17D6 19B7 19D7)
- (MCH LVDS ANALOG 2.5V PWR) =PP2V5_S0_NB_VCCA_LVDS (17C6 19C7 19D1)
- (MCH CRTDAC ANALOG 2.5V PWR) =PP2V5_S0_NB_CRTDAC (19D4 19D7)
- (TMDS 2.5V PWR) =PP2V5_S0_TMDS (68B7)
- =PP2V5_S0_NB_DISP_PLL (19D6)

PP3V3_S0 (5A2)
MAKE_BASE=TRUE
MIN_LINE_WIDTH=0.30MM
MIN_NECK_WIDTH=0.20MM
VOLTAGE=3.3V
- (COME FROM S5 TO S0 MOSFET) =PP3V3_S0_FET (63C3)
- (MCH HV BUFFER 3.3V PWR) =PP3V3_S0_NB_VCC_HV (17C6 19B7 19C7)
- =PP3V3_S0_SB (22B5 25D8 34C8)
- (ICH GPIO PULLS 3.3V PWR) =PP3V3_S0_SB_GPIO (21C3 21D3 23B2 23D5)
- (ICH IO BUFFER 3.3V PWR) =PP3V3_S0_SB_VCC3_3 (24B5 25B8 25C6)
- (ICH PCI I/O 3.3V PWR) =PP3V3_S0_SB_VCC3_3_PCI (24B3 25A4)
- (ICH IDE I/O 3.3V PWR) =PP3V3_S0_SB_VCC3_3_IDE (24C3 25B4)
- (ICH PCI PULLS 3.3V PWR) =PP3V3_S0_SB_PCI (26D1)
- (ICH PM PULLS 3.3V PWR) =PP3V3_S0_SB_PM (26B6 26B8)
- (PATA PULLS 3.3V PWR) =PP3V3_S0_PATA (34C2)
- (SATA 3.3V PWR) =PP3V3_S0_SMC_LS (46D3)
- (MCH PULLS 3.3V PWR) =PP3V3_S0_NB (14C7 14D6 19C7 20A4 20B4)
- (ICH LAN I/F 3.3V PWR, NEED TO CHECK INTEL) =PP3V3_S0_SB_VCCLAN3_3 (24D3 25D3)
- (ICH INTEL HDA CORE 3.3V PWR) =PP3V3_S0_SB_3V3_1V5_VCCHDA (24C3 25C4)
- (DIMM SPD 3.3V PWR) =PPSPD_S0_MEM (28A7 29A3 29A7)
- (CLOCK GENERATOR 3.3V PWR) =PP3V3_S0_CK410 (32C7 32D3 32D8)
- (WIRELESS CARD 3.3V PWR) =PP3V3_S0_AIRPORT (43C3)
- (TPM 3.3V PWR) =PP3V3_S0_TPM (53D4)
- (AUDIO 3.3V PWR) =PP3V3_S0_AUDIO (54A6 54D7 56D8 57B5)
- (TMDS 3.3V PWR) =PP3V3_S0_TMDS (68B1 68B2 68C8 68D8 69B7 69D1 69D5)
- (CPU THERMAL SENSOR 3.3V PWR) =PP3V3_S0_THRM_SNR (10C4 49B3 49D3)
- (ISL6262 3V3) =PP3V3_S0_IMVP6 (58D8)
- =PP3V3_S0_RSTBUF (26B4)
- =PP3V3_S0_SMBUS_SB (27D8)
- =PP3V3_S0_SMBUS_SMC_0 (27D5)
- =PP3V3_S0_SMBUS_SMC_MLB (27C5)
- =PP3V3_S0_ALLSYSPG (63B1)
- =PP3V3_S0_FAN_RT (5D2 51C4)
- =PP3V3_S0_LCD (67B5 67B7 67C6)
- =PP3V3_S0_PBATTISENS (66B3)
- =PP3V3_S0_PDCISENS (62A5 66C4)
- =PP3V3_S0_CPUPOWER (48C2)
- =PP3V3_S0_SMBUS_SMC_BSB (27B1)
- =PP3V3_S0_1V51V05S0 (62B1)
- =PP3V3_S0_2V5S0 (60C4)
- =PP3V3_S0_FW (39C6)
- (FIREWIRE DIGITAL 3.3V PWR) =PP3V3_S0_ENET (36C8)

PP5V_S0 (5A2)
MAKE_BASE=TRUE
MIN_LINE_WIDTH=0.30 MM
MIN_NECK_WIDTH=0.20 MM
VOLTAGE=5V
- (COME FROM S5 TO S0 MOSFET) =PP5V_S0_FET (63C3)
- =PP5V_S0_SB (25D8)
- (SATA 5V PWR) =PP5V_S0_SATA (35C6)
- (DDR2 TERMINATION) =PP5V_S0_MEMVTT (31C6)
- (AUDIO 5V PWR) =PP5V_S0_AUDIO (54A6 55C8)
- (AUDIO SPEAKER 5V PWR) =PP5V_S0_AUDIO_PWR (55B8 55D8)
- (LPC DEBUG BOARD 5V PWR) =PP5V_S0_LPCPLUS (5D2 47C6)
- (MCH TV 3.3V LDO) =PP5V_S0_NB_TVDAC (19C4 19C7)
- (ISL6262 VDD) =PP5V_S0_IMVP6 (58D8)
- (LTC3728LXC EXTVCC) =PP5V_1V51V05S0_VCC (62A8)
- (TMDS 5V PWR) =PP5V_S0_TMDS (68B7 69C6)
- =PP5V_S0_FAN_RT (5D2 51C4)
- =PP5V_S0_LCD (67D7)
- =PP5V_S0_ISENSECAL (48A8)

"S3" RAILS
ON IN RUN AND SLEEP

PP1V2_S3 (5A2)
MAKE_BASE=TRUE
MIN_LINE_WIDTH=0.6MM
MIN_NECK_WIDTH=0.32MM
VOLTAGE=1.2V
- (LDO OUTPUT 1.2V PWR) =PP1V2_S3_REG (63B5 60B2)
- (ENET 1.2V PWR) =PP1V2_S3_ENET (36A8 36D7)

PP1V8_S3 (5A2)
MAKE_BASE=TRUE
MIN_LINE_WIDTH=0.6MM
MIN_NECK_WIDTH=0.4MM
VOLTAGE=1.8V
- (REGULATOR OUTPUT 1.8V PWR) =PP1V8_S3_REG (61B1)
- (DDR2 DIMM 1.8V PWR) =PP1V8_S3_MEM (19C7 19C8 28B2 28D4 28D6 29B2 29D4 29D6)
- =PP1V8_S3_P1V8S0 (63A5)
- =PP1V8_S3_MEMVTT (31C6)
- =PP1V8_S3_MEM_NB_SENSE (61C4)
- =PP1V8_S3_1V2S3 (60B5)

PP1V8_S3_MEM_NB
MAKE_BASE=TRUE
MIN_LINE_WIDTH=0.6MM
MIN_NECK_WIDTH=0.4MM
VOLTAGE=1.8V
- =PP1V8_S3_MEM_NB
- (MCH DDR2 1.8V PWR)

PP2V5_S3 (5A2)
MAKE_BASE=TRUE
MIN_LINE_WIDTH=0.5 mm
MIN_NECK_WIDTH=0.25 mm
VOLTAGE=2.5V
- (REGULATOR OUTPUT 2.5V PWR) =PP2V5_S3_REG (68C2)
- (ENET 2.5V PWR) =PP2V5_S3_ENET (36D3)

PP3V3_S3 (5A2)
MAKE_BASE=TRUE
MIN_LINE_WIDTH=0.2 MM
MIN_NECK_WIDTH=0.16 MM
VOLTAGE=3.3V
- (COME FROM S5 TO S3 MOSFET) =PP3V3_S3_FET (63D3)
- =PP3V3_S3_SMBUS_SMC_RMT (27D3)
- (ETHERNET 3.3V PWR) =PP3V3_S3_ENET (36A5 36B4 36B5 36C8 36D6 36D8)
- (BLUETOOTH 3.3V PWR) =PP3V3_S3_BT (44C6)
- (ACCELEROMETER 3.3V PWR) =PP3V3_S3_SMS (46D5 52C7)
- (TPM 3.3V SUSPEND PWR) =PP3V3_S3_TPM (46D5 53C2)
- (TPS62050 VIN) =PP3V3_S3_2V5S3 (60C4 60D6)
- (FIREWIRE CHIP PCI SIGNAL INDICATOR) =PP3V3_S3_PCI (38C5)
- =PP3V3_S3_RSTGATE (26B3)
- =PP3V3_S3_AIRPORT_AUX (43C3)
- =PP3V3_S3_FW (38D5)
- =PP3V3_S3_PDCISENS (61C1)

PP5V_S3 (5A2)
MAKE_BASE=TRUE
MIN_LINE_WIDTH=0.6MM
MIN_NECK_WIDTH=0.3MM
VOLTAGE=5V
- (COME FROM S5 TO S3 MOSFET) =PP5V_S3_FET (63D3)
- (ISL6269 PVCC)
- (SYSTEM LED PWR) =PP5V_S3_SYSLED (35B6 46B4)
- (USB IO PORT 5V PWR) =PP5V_S3_CAMERA (67A5)
- (USB IR CONTROLLER 5V PWR) =PP5V_S3_IR (41D6)
- =PP5V_S3_GEYSER (40D6)

"S5" RAILS
ALWAYS ON WHEN UNIT HAS AC POWER (TRICKLE)

PP3V3_S5 (5A2)
MAKE_BASE=TRUE
MIN_LINE_WIDTH=0.6MM
MIN_NECK_WIDTH=0.3MM
VOLTAGE=3.3V
- (REGULATOR OUTPUT 3.3V PWR) =PP3V3_S5_REG (59B8)
- =PP3V3_S5_SB (23A7 23B7 23D4 23D8 25C8)
- (ICH USB CTL PULLS 3.3V PWR) =PP3V3_S5_SB_USB (22D8)
- (ICH PM 3.3V PWR) =PP3V3_S5_SB_PM (11B5 23D1 26C5)
- (ICH SUSPEND 3.3V PWR) =PP3V3_S5_SB_VCCSUS3_3 (24A5 24B3 25B6 25D2)
- (ICH SUSPEND USB 3.3V PWR) =PP3V3_S5_SB_VCCSUS3_3_USB (24B3 25D2)
- (ICH SUSPEND PULLS 3.3V PWR) =PP3V3_S5_SB_IO (22C6)
- (ICH INTEL HDA SUSPEND 3.3V PWR) =PP3V3_S5_SB_3V3_1V5_VCCSUSHDA (24C3)
- (SPI BOOTROM PWR) =PP3V3_S5_ROM (50D4)
- =PP3V3_S5_P3V3S3 (63D5)
- =PP3V3_S5_P3V3S0 (63C5)
- =PP3V3_S5_FWLATEVG (39A8)
- =PP3V3_S5_LCD (67C7)

PP5V_S5 (5A2)
MAKE_BASE=TRUE
MIN_LINE_WIDTH=0.6MM
MIN_NECK_WIDTH=0.3MM
VOLTAGE=5V
- (REGULATOR OUTPUT 5 PWR) =PP5V_S5_REG (59B1)
- =PP5V_S5_SB (25C8)
- =PP5V_S5_P5VS3 (63D5)
- =PP5V_S5_PWRCTL (63A7 63D6)
- =PP5V_S5_P5VS0 (63C5)
- =PP5V_S5_USB (42C8)
- =PP5V_S5_PATA (PATA 5V PWR) (34D6)
- =PP5V_S5_1V8S3 (61C7)

G3 HOT

PP3V42_G3H (5A2)
MAKE_BASE=TRUE
MIN_LINE_WIDTH=0.2MM
MIN_NECK_WIDTH=0.2MM
VOLTAGE=3.425V
- =PP3V42_G3H_REG (63D1)
- =PP3V42_G3H_SMCVREF (46C8)
- =PP3V42_G3H_SMBUS_SMC_BSA (27C3)
- =PP3V42_G3H_PWRCTL (63B8 63C8)
- =PP3V42_G3H_LIDSWITCH (65A8)
- (LPC DEBUG BOARD) =PP3V42_G3H_LPCPLUS (5D2 47C6)
- =PP3V42_G3H_SB_RTC (26D6)
- =PP3V42_G3H_ACIN (65C4 65C8 66A5)
- (SMC 32.768KHz OSC) =PP3V42_G3H_SMC_CLK (46A8)
- (SMC 3.3V PWR) =PP3V42_G3H_SMC (45D2 45D3 46D1 46D5 46D8 48C8)

PBUS HOT

PPBUSB_G3H (5A2)
MAKE_BASE=TRUE
MIN_LINE_WIDTH=0.6MM
MIN_NECK_WIDTH=0.3MM
VOLTAGE=12.6V
- =PPBUSA_G3H (66C2)
- (INVERTER PBUS PWR)
- (ISL6262 VIN)
- (LTC3728 VIN) =PPBUS_S5_INV (67D4)
- =PPVIN_S5_IMVP6 (48C7 58C2 58D5 58D8)
- =PPVIN_S5_1V51V05S0 (62D8)
- =PPBUSB_G3H (66C2)
- (LTC3728 VIN) =PPVIN_S5_5V3V3S5 (59D8 63B7)
- (ISL6269 VIN) =PPVIN_S5_1V8S3 (61C7)
- (FIREWIRE PORT PBUS PWR) =PPBUS_S5_FWPWRSW (39D6)
- (YUKON POWER CONTROL) =PPBUS_S5_YUKON_CTRL (60C8)

PP18V5_G3H (5A2)
MAKE_BASE=TRUE
MIN_LINE_WIDTH=0.6 MM
MIN_NECK_WIDTH=0.20 MM
VOLTAGE=18.5V
- =PP18V5_G3H_INRUSH (65D1)
- (DC-IN OUTPUT 18.5V PWR)
- (CHARGER INPUT 18.5V PWR) =PP18V5_G3H_CHGR (66D8)
- (SMC INPUT 18.5V PWR)

DCIN G3HOT

PPDCIN_G3H
MAKE_BASE=TRUE
MIN_LINE_WIDTH=0.6MM
MIN_NECK_WIDTH=0.3MM
VOLTAGE=18.5V
- =PPDCIN_G3H (65D3)
- =PPVBATT_G3H (66B2)
- =PPVIN_G3H_P3V42G3H (63D3)

GND RAILS

XW8101 SM
- =GND_AUDIO_CODEC (5D1) — GND_AUDIO_CODEC — MAKE_BASE=TRUE

XW8102 SM
- =GND_AUDIO_PWR (5D1) — GND_AUDIO_PWR — MAKE_BASE=TRUE

Power Conn / Alias

SYNC_MASTER=ENET SYNC_DATE=11/16/2005

NOTICE OF PROPRIETARY PROPERTY

THE INFORMATION CONTAINED HEREIN IS THE PROPRIETARY PROPERTY OF APPLE COMPUTER, INC. THE POSSESSOR AGREES TO THE FOLLOWING

I TO MAINTAIN THE DOCUMENT IN CONFIDENCE

II NOT TO REPRODUCE OR COPY IT

III NOT TO REVEAL OR PUBLISH IN WHOLE OR PART

APPLE COMPUTER INC.

SIZE	DRAWING NUMBER	REV.
D	051-7374	A

SCALE NONE SHT 64 OF 79

DC-JACK INTERFACE

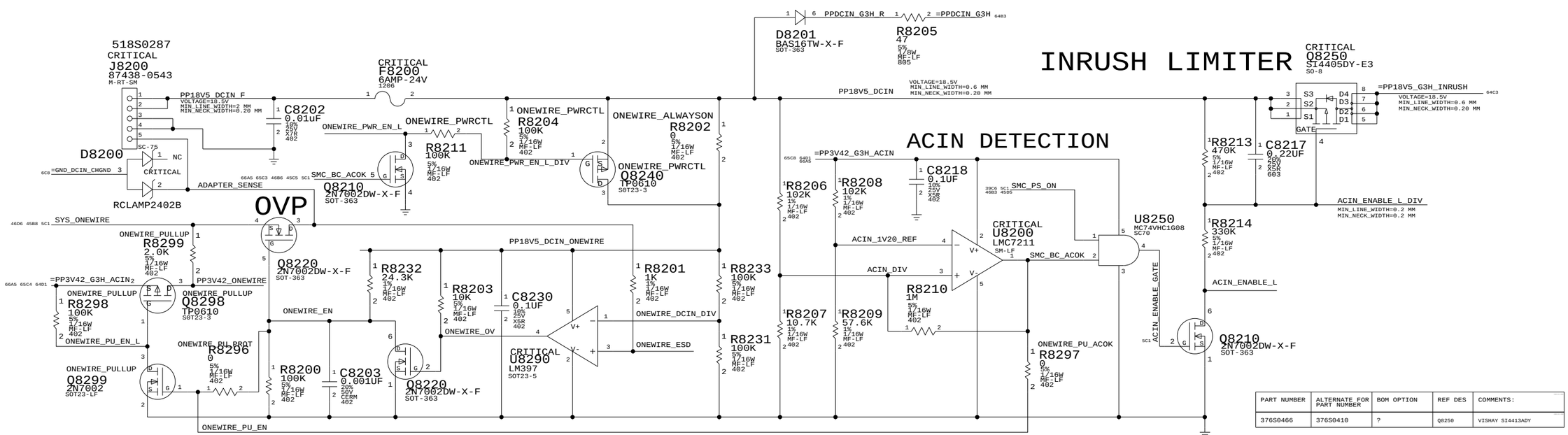

PART NUMBER	ALTERNATE FOR PART NUMBER	BOM OPTION	REF DES	COMMENTS:
376S0466	376S0410	?	Q8250	VISHAY SI4413ADY

BATTERY INTERFACE

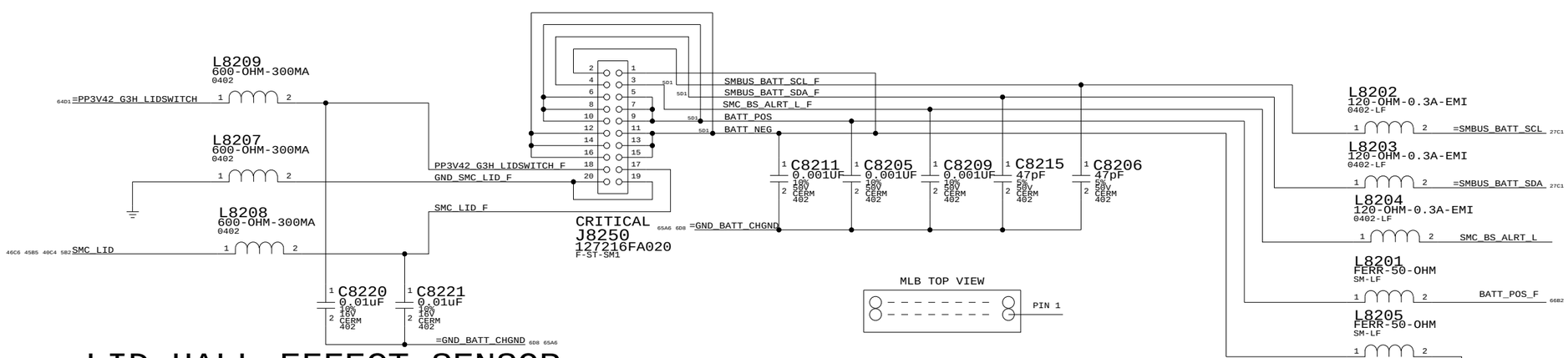

LID HALL EFFECT SENSOR

DC-In & Battery Connectors

SYNC_MASTER=POWER SYNC_DATE=07/13/2005

NOTICE OF PROPRIETARY PROPERTY

THE INFORMATION CONTAINED HEREIN IS THE PROPRIETARY PROPERTY OF APPLE COMPUTER, INC. THE POSSESSOR AGREES TO THE FOLLOWING

I TO MAINTAIN THE DOCUMENT IN CONFIDENCE

II NOT TO REPRODUCE OR COPY IT

III NOT TO REVEAL OR PUBLISH IN WHOLE OR PART

APPLE COMPUTER INC.

SIZE	DRAWING NUMBER	REV.
D	051-7374	A
SCALE NONE	SHT 65 OF 79	

PBUS SUPPLY / BATTERY CHARGER

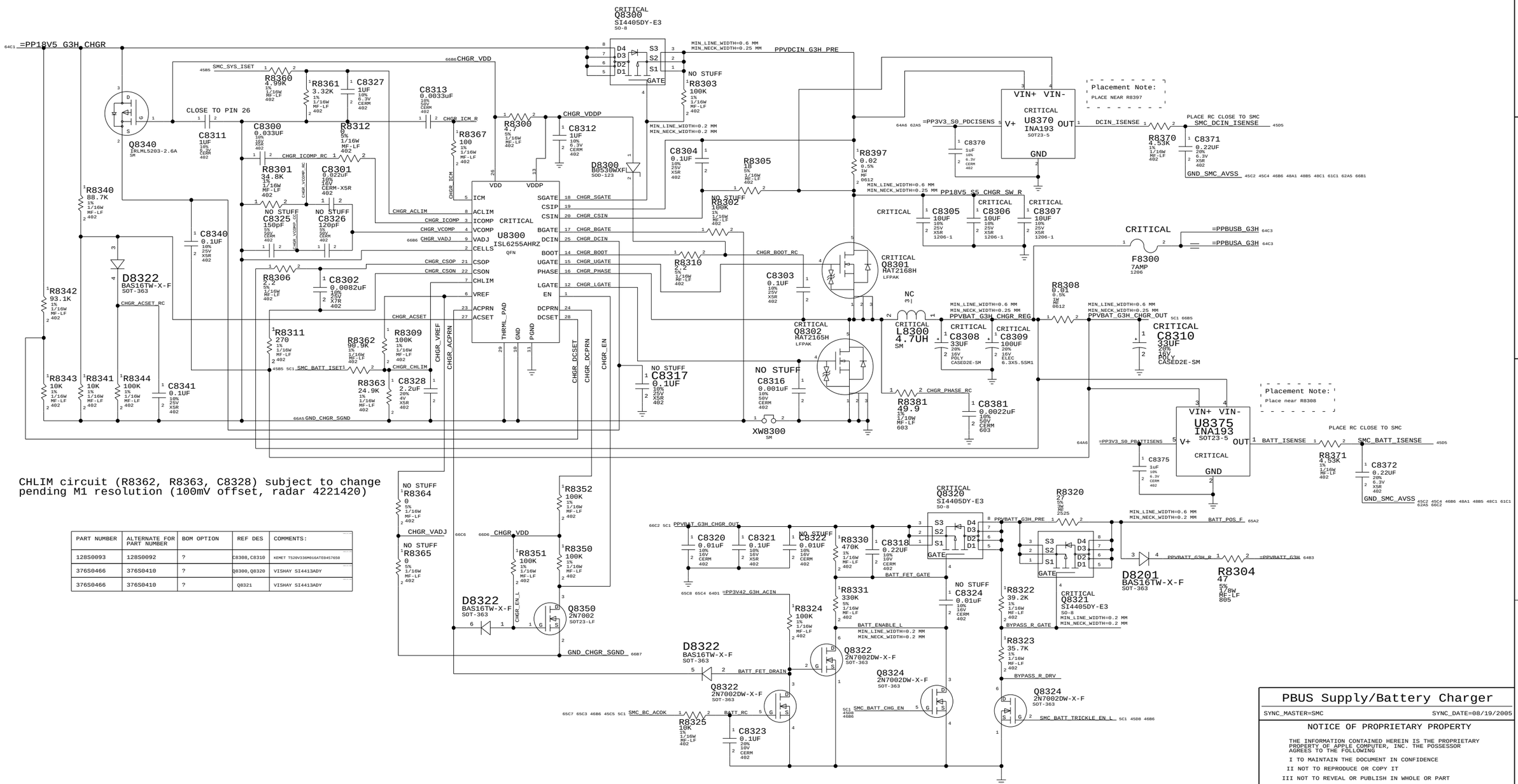

CHLIM circuit (R8362, R8363, C8328) subject to change pending M1 resolution (100mV offset, radar 4221420)

PART NUMBER	ALTERNATE FOR PART NUMBER	BOM OPTION	REF DES	COMMENTS:
128S0093	128S0092	?	C8308,C8310	KEMET T520V336M016ATE045Z650
376S0466	376S0410	?	Q8300,Q8320	VISHAY SI4413ADY
376S0466	376S0410	?	Q8321	VISHAY SI4413ADY

PBUS Supply/Battery Charger

SYNC_MASTER=SMC SYNC_DATE=08/19/2005

NOTICE OF PROPRIETARY PROPERTY

THE INFORMATION CONTAINED HEREIN IS THE PROPRIETARY PROPERTY OF APPLE COMPUTER, INC. THE POSSESSOR AGREES TO THE FOLLOWING

I TO MAINTAIN THE DOCUMENT IN CONFIDENCE

II NOT TO REPRODUCE OR COPY IT

III NOT TO REVEAL OR PUBLISH IN WHOLE OR PART

APPLE COMPUTER INC.

SIZE	DRAWING NUMBER	REV.
D	051-7374	A
SCALE NONE	SHT 66 OF 79	

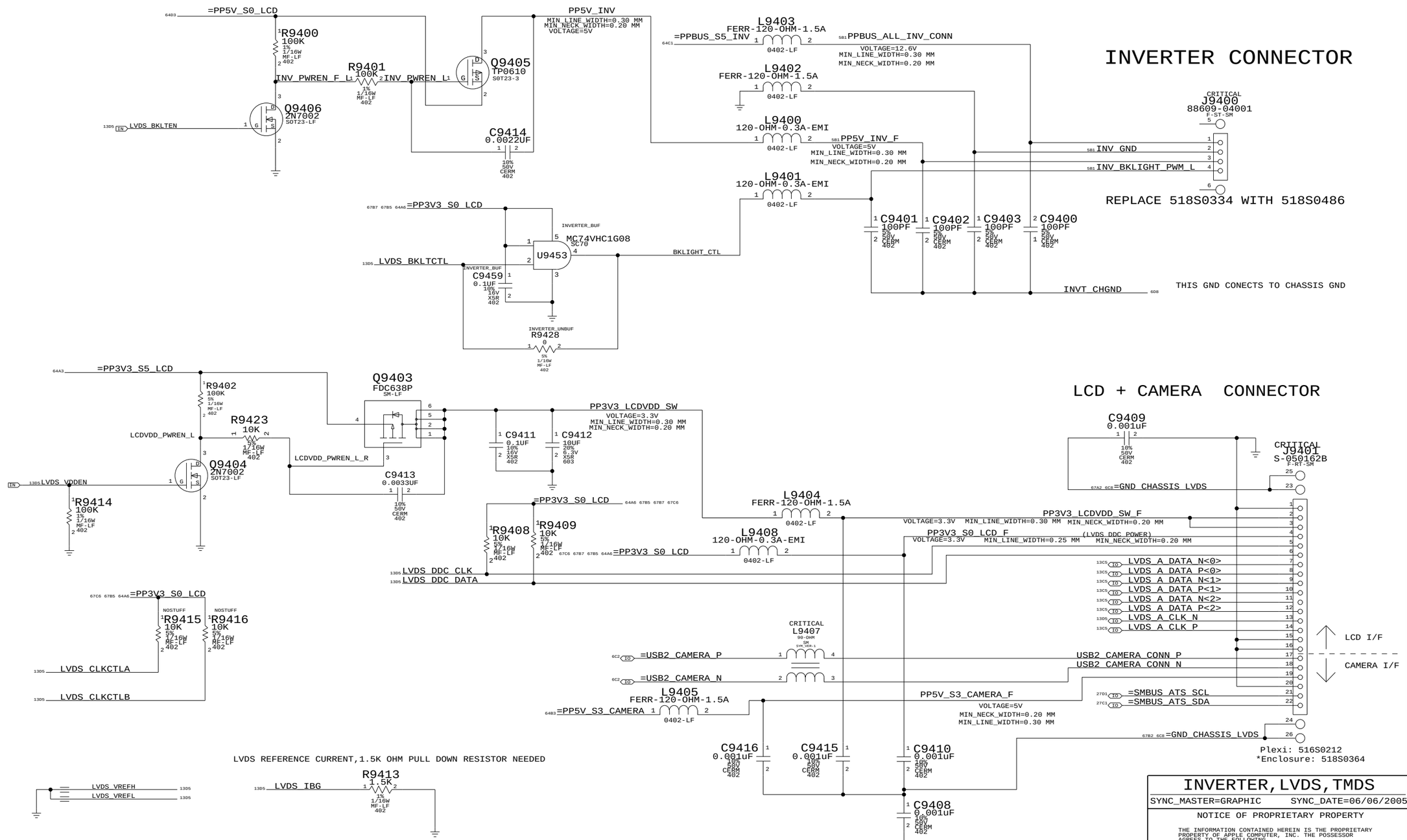

INVERTER,LVDS,TMDS

SYNC_MASTER=GRAPHIC SYNC_DATE=06/06/2005

NOTICE OF PROPRIETARY PROPERTY

THE INFORMATION CONTAINED HEREIN IS THE PROPRIETARY PROPERTY OF APPLE COMPUTER, INC. THE POSSESSOR AGREES TO THE FOLLOWING

I TO MAINTAIN THE DOCUMENT IN CONFIDENCE

II NOT TO REPRODUCE OR COPY IT

III NOT TO REVEAL OR PUBLISH IN WHOLE OR PART

APPLE COMPUTER INC.

SIZE	DRAWING NUMBER	REV.
D	051-7374	A
SCALE NONE	SHT 67 OF 79	

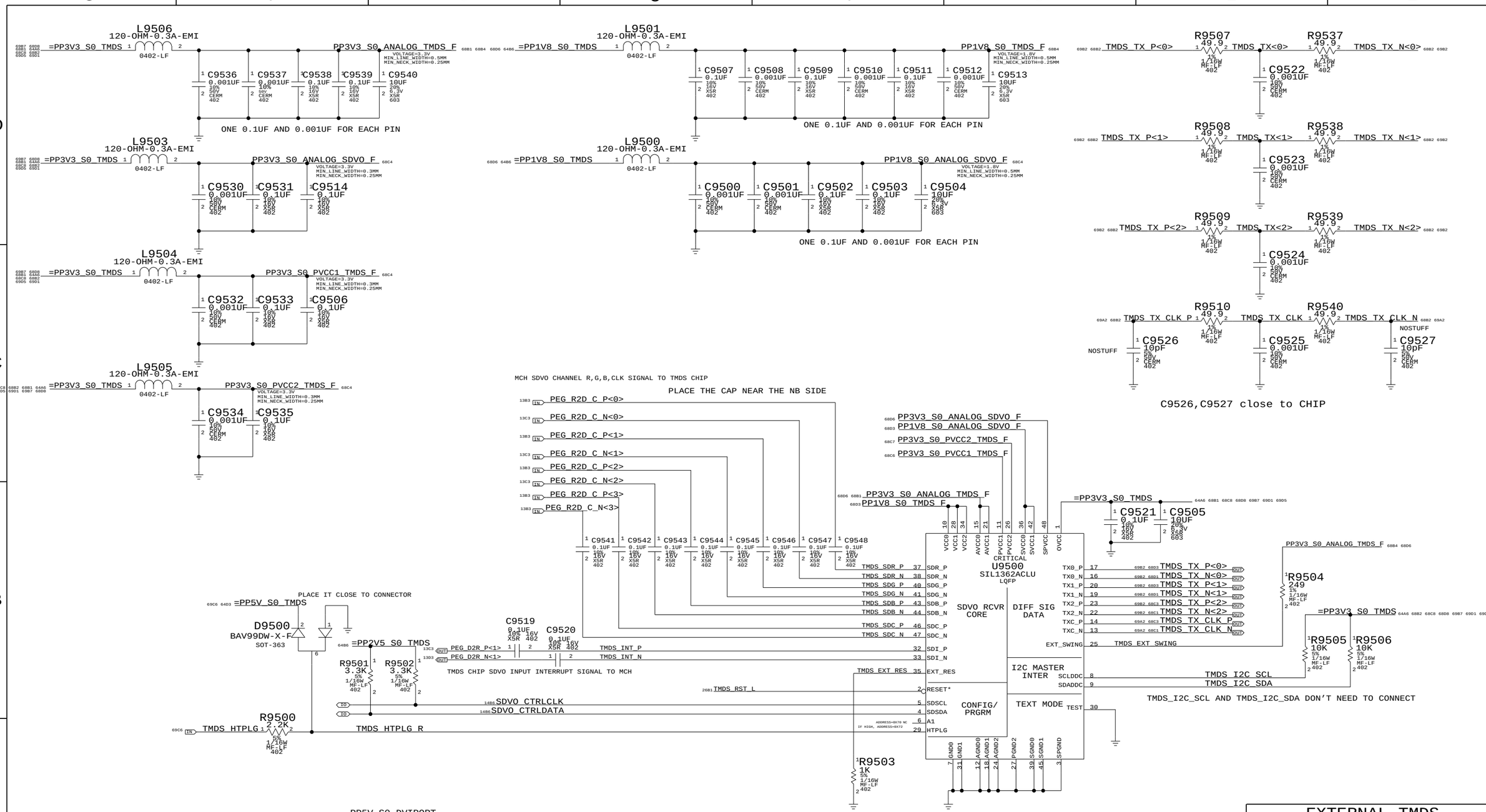

EXTERNAL TMDS

SYNC_MASTER=GRAPHIC SYNC_DATE=06/06/2005

NOTICE OF PROPRIETARY PROPERTY

THE INFORMATION CONTAINED HEREIN IS THE PROPRIETARY PROPERTY OF APPLE COMPUTER, INC. THE POSSESSOR AGREES TO THE FOLLOWING

I TO MAINTAIN THE DOCUMENT IN CONFIDENCE

II NOT TO REPRODUCE OR COPY IT

III NOT TO REVEAL OR PUBLISH IN WHOLE OR PART

APPLE COMPUTER INC.

SIZE	DRAWING NUMBER	REV.
D	051-7374	A

SCALE NONE SHT 68 OF 79

PART NUMBER	ALTERNATE FOR PART NUMBER	BOM OPTION	REF DES	COMMENTS:
155S0227	155S0164	?	L9805,L9806,L9807	KEEP MAG.LAYER IN BOM

Video Connectors

EXTERNAL VIDEO (VGA) INTERFACE

Isolation required for DVI power switch

TMDS(MINI DVI) INTERFACE

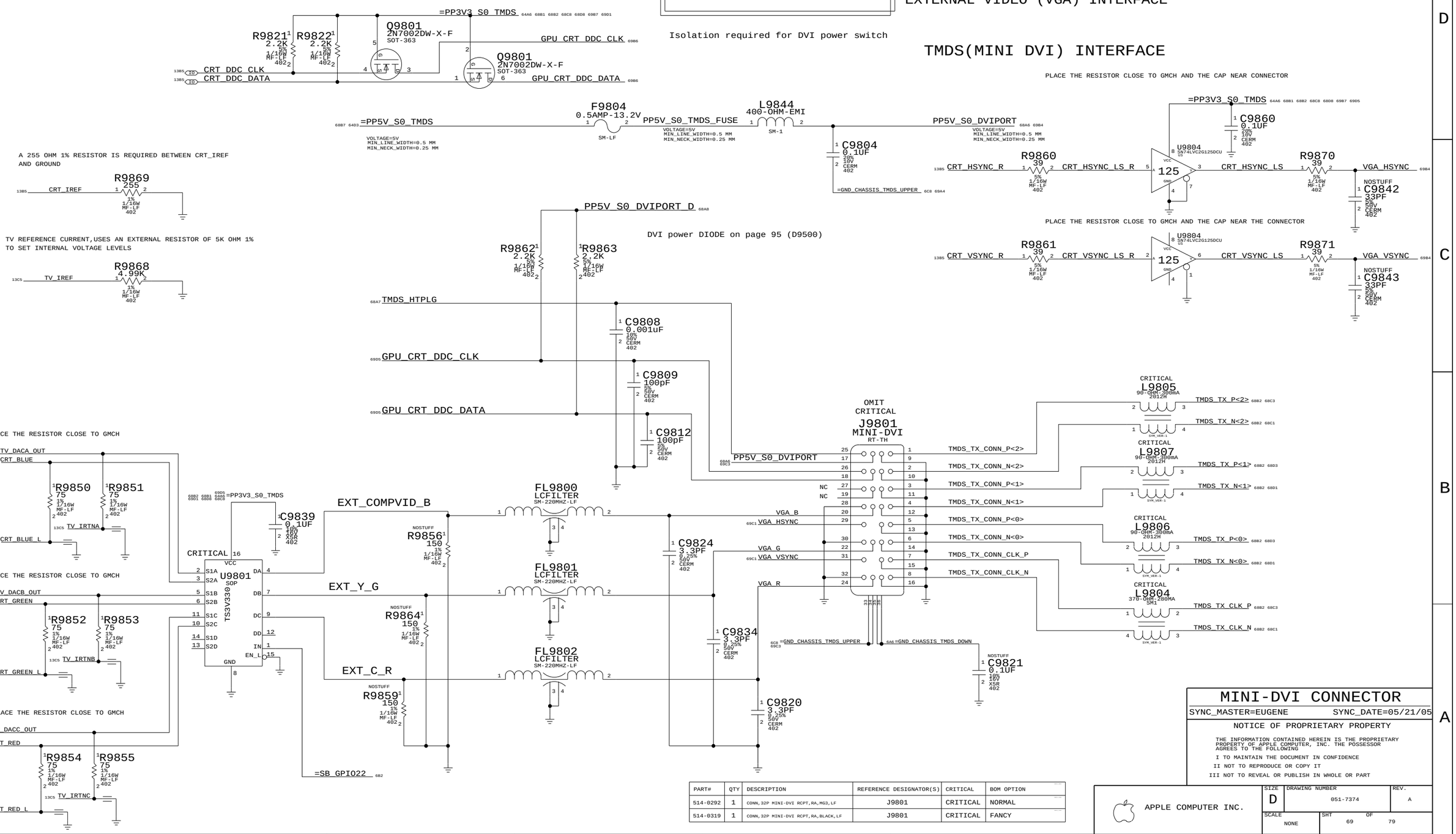

PART#	QTY	DESCRIPTION	REFERENCE DESIGNATOR(S)	CRITICAL	BOM OPTION
514-0292	1	CONN,32P MINI-DVI RCPT,RA,MG3,LF	J9801	CRITICAL	NORMAL
514-0319	1	CONN,32P MINI-DVI RCPT,RA,BLACK,LF	J9801	CRITICAL	FANCY

MINI-DVI CONNECTOR

SYNC_MASTER=EUGENE SYNC_DATE=05/21/05

NOTICE OF PROPRIETARY PROPERTY

THE INFORMATION CONTAINED HEREIN IS THE PROPRIETARY PROPERTY OF APPLE COMPUTER, INC. THE POSSESSOR AGREES TO THE FOLLOWING

I TO MAINTAIN THE DOCUMENT IN CONFIDENCE

II NOT TO REPRODUCE OR COPY IT

III NOT TO REVEAL OR PUBLISH IN WHOLE OR PART

APPLE COMPUTER INC.

SIZE	DRAWING NUMBER	REV.
D	051-7374	A

SCALE NONE SHT 69 OF 79

Title: Basenet Report
Design: mlb_noldo
Date: Mar 22 15:44:50 2007

Base nets and synonyms for
mlb_noldo_lib.MLB_NOLDO(@mlb_noldo_lib.mlb_noldo(sch_1))

Base Signal	Synonyms	Location([Zone][dir])
1V2_FB	1V2_FB - @mlb_noldo_lib.MLB_NOLDO	60A3
1V05S0_BG	1V05S0_BG -	62B4
	@mlb_noldo_lib.MLB_NOLDO	
1V05S0_BOOST	1V05S0_BOOST -	62B4
	@mlb_noldo_lib.MLB_NOLDO	
1V05S0_BOOST_RC	1V05S0_BOOST_RC -	62C3
	@mlb_noldo_lib.MLB_NOLDO	
1V05S0_COMP	1V05S0_COMP -	5D7
	@mlb_noldo_lib.MLB_NOLDO	
1V05S0_FSET	1V05S0_FSET -	5D7
	@mlb_noldo_lib.MLB_NOLDO	
1V05S0_ITH	1V05S0_ITH -	62B4
	@mlb_noldo_lib.MLB_NOLDO	
1V05S0_ITH_RC	1V05S0_ITH_RC -	62B3
	@mlb_noldo_lib.MLB_NOLDO	
1V05S0_RUNSS	1V05S0_RUNSS -	62B4 63B7
	@mlb_noldo_lib.MLB_NOLDO	
1V05S0_SNS_N	1V05S0_SNS_N -	62C3
	@mlb_noldo_lib.MLB_NOLDO	
1V05S0_SNS_P	1V05S0_SNS_P -	62C3
	@mlb_noldo_lib.MLB_NOLDO	
1V05S0_SW	1V05S0_SW -	62B4
	@mlb_noldo_lib.MLB_NOLDO	
1V05S0_TG	1V05S0_TG -	62C4
	@mlb_noldo_lib.MLB_NOLDO	
1V05S0_VOSNS	1V05S0_VOSNS -	62B4
	@mlb_noldo_lib.MLB_NOLDO	
1V5S0_BG	1V5S0_BG - @mlb_noldo_lib.MLB_NOLDO	62B5
1V5S0_BOOST	1V5S0_BOOST -	62B5
	@mlb_noldo_lib.MLB_NOLDO	
1V5S0_BOOST_RC	1V5S0_BOOST_RC -	62C6
	@mlb_noldo_lib.MLB_NOLDO	
1V5S0_ITH	1V5S0_ITH -	62B5
	@mlb_noldo_lib.MLB_NOLDO	
1V5S0_ITH_RC	1V5S0_ITH_RC -	62B5
	@mlb_noldo_lib.MLB_NOLDO	
1V5S0_RUNSS	1V5S0_RUNSS -	5D7 62B5 63B7
	@mlb_noldo_lib.MLB_NOLDO	
1V5S0_SNS_N	1V5S0_SNS_N -	62C6
	@mlb_noldo_lib.MLB_NOLDO	
1V5S0_SNS_P	1V5S0_SNS_P -	62C6
	@mlb_noldo_lib.MLB_NOLDO	
1V5S0_SW	1V5S0_SW - @mlb_noldo_lib.MLB_NOLDO	62B5
1V5S0_TG	1V5S0_TG - @mlb_noldo_lib.MLB_NOLDO	62C5
1V5S0_VOSNS	1V5S0_VOSNS -	62B5
	@mlb_noldo_lib.MLB_NOLDO	
1V8S3_BOOT	1V8S3_BOOT -	61B5
	@mlb_noldo_lib.MLB_NOLDO	
1V8S3_BOOT_RC	1V8S3_BOOT_RC -	61C4
	@mlb_noldo_lib.MLB_NOLDO	
1V8S3_COMP	1V8S3_COMP -	5D7 61B6
	@mlb_noldo_lib.MLB_NOLDO	
1V8S3_COMP_R	1V8S3_COMP_R -	61B6
	@mlb_noldo_lib.MLB_NOLDO	
1V8S3_FB	1V8S3_FB - @mlb_noldo_lib.MLB_NOLDO	61B6
1V8S3_FCCM	1V8S3_FCCM -	61B6
	@mlb_noldo_lib.MLB_NOLDO	
1V8S3_FSET	1V8S3_FSET -	5D7 61C6
	@mlb_noldo_lib.MLB_NOLDO	
1V8S3_ISEN	1V8S3_ISEN -	61B5
	@mlb_noldo_lib.MLB_NOLDO	
1V8S3_LG	1V8S3_LG - @mlb_noldo_lib.MLB_NOLDO	61B5
1V8S3_PHASE	1V8S3_PHASE -	61B5
	@mlb_noldo_lib.MLB_NOLDO	
1V8S3_UG	1V8S3_UG - @mlb_noldo_lib.MLB_NOLDO	61C5
1V8S3_VCC	1V8S3_VCC -	61C6
	@mlb_noldo_lib.MLB_NOLDO	
1V51V05S0_FCB	1V51V05S0_FCB -	62A3 62B5
	@mlb_noldo_lib.MLB_NOLDO	
1V51V05S0_FSEL	1V51V05S0_FSEL -	62A2 62B4
	@mlb_noldo_lib.MLB_NOLDO	
1V51V05S0_PGOOD	1V51V05S0_PGOOD -	58C7 62A1 63C2
	@mlb_noldo_lib.MLB_NOLDO	
2V5S0_BP	2V5S0_BP - @mlb_noldo_lib.MLB_NOLDO	60C3
2V5S3_BP	2V5S3_BP - @mlb_noldo_lib.MLB_NOLDO	60C3
3V3S5_BG	3V3S5_BG - @mlb_noldo_lib.MLB_NOLDO	59B5
3V3S5_BOOST	3V3S5_BOOST -	59B5
	@mlb_noldo_lib.MLB_NOLDO	
3V3S5_BOOST_RC	3V3S5_BOOST_RC -	59C6
	@mlb_noldo_lib.MLB_NOLDO	
3V3S5_COMP	3V3S5_COMP -	5D7
	@mlb_noldo_lib.MLB_NOLDO	
3V3S5_FSET	3V3S5_FSET -	5D7
	@mlb_noldo_lib.MLB_NOLDO	
3V3S5_ITH	3V3S5_ITH -	59B5
	@mlb_noldo_lib.MLB_NOLDO	
3V3S5_ITH_RC	3V3S5_ITH_RC -	59B5
	@mlb_noldo_lib.MLB_NOLDO	
3V3S5_RUNSS	3V3S5_RUNSS -	59B5 63C7
	@mlb_noldo_lib.MLB_NOLDO	
3V3S5_SNS_N	3V3S5_SNS_N -	59C6
	@mlb_noldo_lib.MLB_NOLDO	
3V3S5_SNS_P	3V3S5_SNS_P -	59C6
	@mlb_noldo_lib.MLB_NOLDO	
3V3S5_SW	3V3S5_SW - @mlb_noldo_lib.MLB_NOLDO	59B5
3V3S5_TG	3V3S5_TG - @mlb_noldo_lib.MLB_NOLDO	59C5
3V3S5_VOSNS	3V3S5_VOSNS -	59B5
	@mlb_noldo_lib.MLB_NOLDO	
5V3V3S5_FCB	5V3V3S5_FCB -	59A3 59B5
	@mlb_noldo_lib.MLB_NOLDO	
5V3V3S5_FSEL	5V3V3S5_FSEL -	59A2 59B4
	@mlb_noldo_lib.MLB_NOLDO	
5VS5_BG	5VS5_BG - @mlb_noldo_lib.MLB_NOLDO	59B4
5VS5_BOOST	5VS5_BOOST -	59B4
	@mlb_noldo_lib.MLB_NOLDO	
5VS5_BOOST_RC	5VS5_BOOST_RC -	59C3
	@mlb_noldo_lib.MLB_NOLDO	
5VS5_ITH	5VS5_ITH - @mlb_noldo_lib.MLB_NOLDO	59B4
5VS5_ITH_RC	5VS5_ITH_RC -	59B3
	@mlb_noldo_lib.MLB_NOLDO	
5VS5_RUNSS	5VS5_RUNSS -	5D7 59B4 63C7
	@mlb_noldo_lib.MLB_NOLDO	
5VS5_SNS_N	5VS5_SNS_N -	59C3
	@mlb_noldo_lib.MLB_NOLDO	
5VS5_SNS_P	5VS5_SNS_P -	59C3
	@mlb_noldo_lib.MLB_NOLDO	
5VS5_SW	5VS5_SW - @mlb_noldo_lib.MLB_NOLDO	59B4
5VS5_TG	5VS5_TG - @mlb_noldo_lib.MLB_NOLDO	59C4
5VS5_VOSNS	5VS5_VOSNS -	59B4
	@mlb_noldo_lib.MLB_NOLDO	
5V_REG_IN	5V_REG_IN -	54A5
	@mlb_noldo_lib.MLB_NOLDO	
=EXTBUSB_OC_L	=EXTBUSB_OC_L -	6C2 42C8
	@mlb_noldo_lib.MLB_NOLDO	
	USB_C_OC_L -	6C1 22C4 22D8
	@mlb_noldo_lib.MLB_NOLDO	
	=EXTBUSB_OC_L -	6C2
	@mlb_noldo_lib.MLB_NOLDO	
=FWPWR_PWRON	=FWPWR_PWRON -	6D2 39C6
	@mlb_noldo_lib.MLB_NOLDO	
	NC_FWPWR_PWRON -	6D1
	@mlb_noldo_lib.MLB_NOLDO	
=GND_BATT_CHGND	=GND_BATT_CHGND -	6D8 65A6 65A6
	@mlb_noldo_lib.MLB_NOLDO	
	=GND_CHASSIS_AUDIO_JACK -	6D8 56B8
	@mlb_noldo_lib.MLB_NOLDO	
	=GND_CHASSIS_AUDIO_MIC -	6D8 57A6
	@mlb_noldo_lib.MLB_NOLDO	
	=GND_CHASSIS_DIPDIMM_LEFT -	6D8 28A5
	@mlb_noldo_lib.MLB_NOLDO	
	GND_CHASSIS_IO -	6C7 6D7
	@mlb_noldo_lib.MLB_NOLDO	
	=GND_CHASSIS_USB -	6C8 42A2 42A4 42C2 42C4
	@mlb_noldo_lib.MLB_NOLDO	
	=GND_CHASSIS_FW_DOWN -	6C8 39A1
	@mlb_noldo_lib.MLB_NOLDO	
	GND_CHASSIS_IO -	6C7 6D7
	@mlb_noldo_lib.MLB_NOLDO	
	=GND_CHASSIS_USB -	6C8 42A2 42A4 42C2 42C4
	@mlb_noldo_lib.MLB_NOLDO	
	=GND_CHASSIS_FW_DOWN -	6C8 39A1
	@mlb_noldo_lib.MLB_NOLDO	
	=GND_CHASSIS_DIPDIMM_LEFT -	6D8 28A5
	@mlb_noldo_lib.MLB_NOLDO	
	=GND_CHASSIS_AUDIO_SPKRCONN -	6D8
	@mlb_noldo_lib.MLB_NOLDO	
	=GND_CHASSIS_AUDIO_SHIELD3 -	6D8
	@mlb_noldo_lib.MLB_NOLDO	
	=GND_CHASSIS_AUDIO_SHIELD2 -	6D8
	@mlb_noldo_lib.MLB_NOLDO	
	=GND_CHASSIS_AUDIO_SHIELD1 -	6D8
	@mlb_noldo_lib.MLB_NOLDO	
	=GND_CHASSIS_AUDIO_MIC -	6D8 57A6
	@mlb_noldo_lib.MLB_NOLDO	
	=GND_CHASSIS_AUDIO_JACK -	6D8 56B8
	@mlb_noldo_lib.MLB_NOLDO	
=GND_CHASSIS_DIPDIMM_CENTER -		6B8 28D5 29A5
_CENTER	@mlb_noldo_lib.MLB_NOLDO	
	GND_CHASSIS_CENTER -	6B7
	@mlb_noldo_lib.MLB_NOLDO	
=GND_CHASSIS_DIPDIMM_RIGHT -		6B8 29D4
_RIGHT	@mlb_noldo_lib.MLB_NOLDO	
	GND_CHASSIS_RIGHT -	6B7
	@mlb_noldo_lib.MLB_NOLDO	
=GND_CHASSIS_FW_UPPE	=GND_CHASSIS_FW_UPPER -	6A6 39A1
R	@mlb_noldo_lib.MLB_NOLDO	
	=GND_CHASSIS_TMDS_DOWN -	6A6 69A3
	@mlb_noldo_lib.MLB_NOLDO	
	GND_CHASSIS_IO1 -	6A5
	@mlb_noldo_lib.MLB_NOLDO	
	=GND_CHASSIS_TMDS_DOWN -	6A6 69A3
	@mlb_noldo_lib.MLB_NOLDO	
=GND_CHASSIS_LVDS	=GND_CHASSIS_LVDS -	6C8 67A2 67B2
	@mlb_noldo_lib.MLB_NOLDO	
	GND_CHASSIS_SATA -	6C7 35C8
	@mlb_noldo_lib.MLB_NOLDO	
=GND_CHASSIS_RJ45	=GND_CHASSIS_RJ45 -	6C8 37A4
	@mlb_noldo_lib.MLB_NOLDO	
	=GND_CHASSIS_TMDS_UPPER -	6C8 69A4 69C3
	@mlb_noldo_lib.MLB_NOLDO	
	GND_CHASSIS_DCIN -	6C7
	@mlb_noldo_lib.MLB_NOLDO	
	=GND_DCIN_CHGND -	6C8 65C8
	@mlb_noldo_lib.MLB_NOLDO	
	GND_CHASSIS_DCIN -	6C7
	@mlb_noldo_lib.MLB_NOLDO	
	=GND_DCIN_CHGND -	6C8 65C8
	@mlb_noldo_lib.MLB_NOLDO	
	=GND_CHASSIS_TMDS_UPPER -	6C8 69A4 69C3
	@mlb_noldo_lib.MLB_NOLDO	
=P1V2S0_EN	=P1V2S0_EN -	63B5
	@mlb_noldo_lib.MLB_NOLDO	
	PM_SLP_S3_LS12V6_L -	63B6
	@mlb_noldo_lib.MLB_NOLDO	
	=P3V3S0_EN -	63B5
	@mlb_noldo_lib.MLB_NOLDO	
	=P5VS0_EN -	63C5
	@mlb_noldo_lib.MLB_NOLDO	
	PM_SLP_S3_LS12V6_L -	63B6
	@mlb_noldo_lib.MLB_NOLDO	
=P1V8S0_EN_L	=P1V8S0_EN_L -	63A5
	@mlb_noldo_lib.MLB_NOLDO	
	PM_SLP_S3_LS5V -	63A6
	@mlb_noldo_lib.MLB_NOLDO	
=P3V3S3_EN_L	=P3V3S3_EN_L -	63C5
	@mlb_noldo_lib.MLB_NOLDO	
	PM_SLP_S4_LS5V -	42B8 63D6
	@mlb_noldo_lib.MLB_NOLDO	
	=P5VS3_EN_L -	63D5
	@mlb_noldo_lib.MLB_NOLDO	
	PM_SLP_S4_LS5V -	42B8 63D6
	@mlb_noldo_lib.MLB_NOLDO	
=PP1V05_S0_FSB_NB	=PP1V05_S0_FSB_NB -	12A7 12B7 12C2 19D7 33B8
	@mlb_noldo_lib.MLB_NOLDO	33C7 33C8 64D6
	=PP1V05_S0_NB -	19D1 19D7 64C6
	@mlb_noldo_lib.MLB_NOLDO	
	=PP1V05_S0_CPU_NB -	62A6 64D8
	@mlb_noldo_lib.MLB_NOLDO	
	=PP1V05_S0_NB_VTT -	17D3 19B5 19D7 64C6
	@mlb_noldo_lib.MLB_NOLDO	
	=PP1V05_S0_CPU -	7B5 7B6 7D5 7D5 8C7 9C8
	@mlb_noldo_lib.MLB_NOLDO	11B3 11C5 64D6
	=PPVCORE_S0_NB -	16C8 16D3 19C8 19D7 64D6
	@mlb_noldo_lib.MLB_NOLDO	
	PP1V05_S0_CPU_NB -	64D7
	@mlb_noldo_lib.MLB_NOLDO	
	=PPVCORE_S0_NB -	16C8 16D3 19C8 19D7 64D6
	@mlb_noldo_lib.MLB_NOLDO	
	=PP1V05_S0_NB_VTT -	17D3 19B5 19D7 64C6
	@mlb_noldo_lib.MLB_NOLDO	
	=PP1V05_S0_NB -	19D1 19D7 64C6
	@mlb_noldo_lib.MLB_NOLDO	
	=PP1V05_S0_CPU_NB -	62A6 64D8
	@mlb_noldo_lib.MLB_NOLDO	
	=PP1V05_S0_CPU -	7B5 7B6 7D5 7D5 8C7 9C8
	@mlb_noldo_lib.MLB_NOLDO	11B3 11C5 64D6
=PP1V05_S0_REG	=PP1V05_S0_REG -	5B2 62B1 64D8
	@mlb_noldo_lib.MLB_NOLDO	
	=PP1V05_S0_CPU_NB_SENSE -	62A8 64D6
	@mlb_noldo_lib.MLB_NOLDO	
	=PPVCORE_S0_SB -	24D3 25D3 64D6
	@mlb_noldo_lib.MLB_NOLDO	
	PP1V05_S0 -	5B2 64D7
	@mlb_noldo_lib.MLB_NOLDO	
	=PPVCORE_S0_SB -	24D3 25D3 64D6
	@mlb_noldo_lib.MLB_NOLDO	
	=PP1V05_S0_SB_CPU_IO -	21C1 21C1 24C3 25C4 64D6
	@mlb_noldo_lib.MLB_NOLDO	
	=PP1V05_S0_CPU_NB_SENSE -	62A8 64D6
	@mlb_noldo_lib.MLB_NOLDO	
=PP1V5_S0_NB	=PP1V5_S0_NB -	19C1 19D7 64C6
	@mlb_noldo_lib.MLB_NOLDO	
	=PP1V5_S0_NB_PCIE -	13D2 19D7 64C6
	@mlb_noldo_lib.MLB_NOLDO	
	=PP1V5_S0_AIRPORT -	43D3 64C6
	@mlb_noldo_lib.MLB_NOLDO	
	=PP1V5_S0_SB_VCCSATAPLL -	24B5 25D6 64C6
	@mlb_noldo_lib.MLB_NOLDO	
	=PP1V5_S0_SB_VCC1_5_A_ATX -	24A5 25C6 64C6
	@mlb_noldo_lib.MLB_NOLDO	
	=PP1V5_S0_SB_VCCUSBPLL -	24A5 25B6 64C6
	@mlb_noldo_lib.MLB_NOLDO	
	=PP1V5_S0_SB_VCC1_5_A_USB_CORE -	24A3 25B2 64C6
	@mlb_noldo_lib.MLB_NOLDO	
	=PP1V5_S0_SB_VCC1_5_A -	24A3 25C2 64C6
	@mlb_noldo_lib.MLB_NOLDO	
	=PP1V5_S0_SB -	25A8 25C8 64C6
	@mlb_noldo_lib.MLB_NOLDO	
	=PP1V5_S0_NB_VCCAUX -	16D1 17B6 19B6 19D7 64C6
	@mlb_noldo_lib.MLB_NOLDO	
	=PP1V5_S0_NB_VCCD_HMPLL -	17C6 19D7 64C6
	@mlb_noldo_lib.MLB_NOLDO	
	=PP1V5_S0_NB_VCCD_LVDS -	17C6 19B8 19D7 64C6
	@mlb_noldo_lib.MLB_NOLDO	
	=PP1V5_S0_NB_PLL -	19C6 19D7 64C6
	@mlb_noldo_lib.MLB_NOLDO	
	=PP1V5_S0_NB_TVDAC -	19A8 19D7 64C6
	@mlb_noldo_lib.MLB_NOLDO	
	=PP1V5_S0_NB_3G -	19B5 64C6
	@mlb_noldo_lib.MLB_NOLDO	
	=PP1V5_S0_NB_3GPLL -	19A5 64C6
	@mlb_noldo_lib.MLB_NOLDO	
	=PP1V5_S0_SB_VCC1_5_A_ARX -	24B5 25D6 64C6
	@mlb_noldo_lib.MLB_NOLDO	
	=PP1V5_S0_CPU -	8B7 9D8 64C6
	@mlb_noldo_lib.MLB_NOLDO	
	=PP1V5_S0_REG -	62B8 64C8
	@mlb_noldo_lib.MLB_NOLDO	
	PP1V5_S0 - @mlb_noldo_lib.MLB_NOLDO	5B2 64C7
	=PP1V5_S0_SB_VCCUSBPLL -	24A5 25B6 64C6
	@mlb_noldo_lib.MLB_NOLDO	
	=PP1V5_S0_SB_VCCSATAPLL -	24B5 25D6 64C6
	@mlb_noldo_lib.MLB_NOLDO	
	=PP1V5_S0_SB_VCC1_5_A_USB_CORE -	24A3 25B2 64C6
	@mlb_noldo_lib.MLB_NOLDO	
	=PP1V5_S0_SB_VCC1_5_A_ATX -	24A5 25C6 64C6
	@mlb_noldo_lib.MLB_NOLDO	
	=PP1V5_S0_SB_VCC1_5_A_ARX -	24B5 25D6 64C6
	@mlb_noldo_lib.MLB_NOLDO	
	=PP1V5_S0_SB_VCC1_5_A -	24A3 25C2 64C6
	@mlb_noldo_lib.MLB_NOLDO	
	=PP1V5_S0_SB -	25A8 25C8 64C6
	@mlb_noldo_lib.MLB_NOLDO	
	=PP1V5_S0_REG -	62B8 64C8
	@mlb_noldo_lib.MLB_NOLDO	
	=PP1V5_S0_NB_VCCD_LVDS -	17C6 19B8 19D7 64C6
	@mlb_noldo_lib.MLB_NOLDO	
	=PP1V5_S0_NB_VCCD_HMPLL -	17C6 19D7 64C6
	@mlb_noldo_lib.MLB_NOLDO	
	=PP1V5_S0_NB_VCCAUX -	16D1 17B6 19B6 19D7 64C6
	@mlb_noldo_lib.MLB_NOLDO	
	=PP1V5_S0_NB_TVDAC -	19A8 19D7 64C6
	@mlb_noldo_lib.MLB_NOLDO	
	=PP1V5_S0_NB_PLL -	19C6 19D7 64C6
	@mlb_noldo_lib.MLB_NOLDO	
	=PP1V5_S0_NB_PCIE -	13D2 19D7 64C6
	@mlb_noldo_lib.MLB_NOLDO	
	=PP1V5_S0_NB_3GPLL -	19A5 64C6
	@mlb_noldo_lib.MLB_NOLDO	
	=PP1V5_S0_NB_3G -	19B5 64C6
	@mlb_noldo_lib.MLB_NOLDO	
	=PP1V5_S0_CPU -	8B7 9D8 64C6
	@mlb_noldo_lib.MLB_NOLDO	
	=PP1V5_S0_AIRPORT -	43D3 64C6
	@mlb_noldo_lib.MLB_NOLDO	
=PP1V8_S3_MEM_NB	=PP1V8_S3_MEM_NB -	14C2 16B6 19D7 28D2 29D2
	@mlb_noldo_lib.MLB_NOLDO	61C2 64C6
	PP1V8_S3_MEM_NB -	64C4
	@mlb_noldo_lib.MLB_NOLDO	
=PP2V5_S0_NB_CRTDAC	=PP2V5_S0_NB_CRTDAC -	19D4 19D7 64B6
	@mlb_noldo_lib.MLB_NOLDO	
	=PP2V5_S0_NB_VCCA_3GBG -	17D6 19B7 19D7 64B6
	@mlb_noldo_lib.MLB_NOLDO	
	=PP2V5_S0_NB_VCC_TXLVDS -	17D6 19B8 19D7 64B6
	@mlb_noldo_lib.MLB_NOLDO	
	=PP2V5_S0_NB_DISP_PLL -	19D6 64B6
	@mlb_noldo_lib.MLB_NOLDO	
	=PP2V5_S0_NB_VCCA_LVDS -	17C6 19C7 19D1 64B6
	@mlb_noldo_lib.MLB_NOLDO	
	=PP2V5_S0_TMDS -	64B6 68B7
	@mlb_noldo_lib.MLB_NOLDO	
	=PP2V5_S0_NB_VCCSYNC -	17D6 19B6 19D7 64B6
	@mlb_noldo_lib.MLB_NOLDO	
	=PP2V5_S0_REG -	60C2 63B3 64B8
	@mlb_noldo_lib.MLB_NOLDO	
	PP2V5_S0 - @mlb_noldo_lib.MLB_NOLDO	5B2 64B7
	=PP2V5_S0_TMDS -	64B6 68B7
	@mlb_noldo_lib.MLB_NOLDO	
	=PP2V5_S0_REG -	60C2 63B3 64B8
	@mlb_noldo_lib.MLB_NOLDO	
	=PP2V5_S0_NB_VCC_TXLVDS -	17D6 19B8 19D7 64B6
	@mlb_noldo_lib.MLB_NOLDO	
	=PP2V5_S0_NB_VCCSYNC -	17D6 19B6 19D7 64B6
	@mlb_noldo_lib.MLB_NOLDO	
	=PP2V5_S0_NB_VCCA_LVDS -	17C6 19C7 19D1 64B6
	@mlb_noldo_lib.MLB_NOLDO	
	=PP2V5_S0_NB_VCCA_3GBG -	17D6 19B7 19D7 64B6
	@mlb_noldo_lib.MLB_NOLDO	
	=PP2V5_S0_NB_DISP_PLL -	19D6 64B6
	@mlb_noldo_lib.MLB_NOLDO	
=PP3V3_S0_FAN_RT	=PP3V3_S0_FAN_RT -	5D2 51C4 64A6
	@mlb_noldo_lib.MLB_NOLDO	
	=PP3V3_S0_ENET -	36C8 64A6
	@mlb_noldo_lib.MLB_NOLDO	
	=PP3V3_S0_FW -	39C6 64A6
	@mlb_noldo_lib.MLB_NOLDO	
	=PP3V3_S0_2V5S0 -	60C4 64A6
	@mlb_noldo_lib.MLB_NOLDO	
	=PP3V3_S0_1V51V05S0 -	62B1 64A6
	@mlb_noldo_lib.MLB_NOLDO	
	=PP3V3_S0_SMBUS_SMC_BSB -	27B1 64A6
	@mlb_noldo_lib.MLB_NOLDO	
	=PP3V3_S0_RSTBUF -	26B4 64A6
	@mlb_noldo_lib.MLB_NOLDO	
	=PP3V3_S0_SMBUS_SB -	27D8 64A6
	@mlb_noldo_lib.MLB_NOLDO	
	=PP3V3_S0_SMBUS_SMC_0 -	27D5 64A6
	@mlb_noldo_lib.MLB_NOLDO	
	=PP3V3_S0_SMBUS_SMC_MLB -	27C5 64A6
	@mlb_noldo_lib.MLB_NOLDO	
	=PP3V3_S0_ALLSYSPG -	63B1 64A6
	@mlb_noldo_lib.MLB_NOLDO	
	=PP3V3_S0_LCD -	64A6 67B5 67B5 67B7 67C6
	@mlb_noldo_lib.MLB_NOLDO	
	=PP3V3_S0_PBATTISENS -	64A6 66B3
	@mlb_noldo_lib.MLB_NOLDO	
	=PP3V3_S0_PDCISENS -	62A5 64A6 66C4
	@mlb_noldo_lib.MLB_NOLDO	
	=PP3V3_S0_CPUPOWER -	48C2 64A6
	@mlb_noldo_lib.MLB_NOLDO	
	=PP3V3_S0_SB -	22B5 25D8 34C8 64B6
	@mlb_noldo_lib.MLB_NOLDO	
	=PP3V3_S0_SB_GPIO -	21C3 21D3 23B2 23D5 64B6
	@mlb_noldo_lib.MLB_NOLDO	
	=PP3V3_S0_SB_VCC3_3 -	24B5 24B5 25B8 25C6 64B6
	@mlb_noldo_lib.MLB_NOLDO	
	=PP3V3_S0_SB_VCC3_3_PCI -	24B3 25A4 64B6
	@mlb_noldo_lib.MLB_NOLDO	
	=PP3V3_S0_SB_VCC3_3_IDE -	24C3 25B4 64B6
	@mlb_noldo_lib.MLB_NOLDO	
	=PP3V3_S0_SB_PCI -	26D1 64B6
	@mlb_noldo_lib.MLB_NOLDO	
	=PP3V3_S0_SB_PM -	26B6 26B8 64B6
	@mlb_noldo_lib.MLB_NOLDO	
	=PP3V3_S0_PATA -	34C2 64A6
	@mlb_noldo_lib.MLB_NOLDO	
	=PP3V3_S0_SMC_LS -	46D3 64A6
	@mlb_noldo_lib.MLB_NOLDO	
	=PP3V3_S0_NB -	14C7 14D6 19C7 20A4 20B4
	@mlb_noldo_lib.MLB_NOLDO	20B4 64A6
	=PP3V3_S0_SB_VCCLAN3_3 -	24D3 25D3 64A6
	@mlb_noldo_lib.MLB_NOLDO	
	=PP3V3_S0_SB_3V3_1V5_VCCHDA -	24C3 25C4 64A6
	@mlb_noldo_lib.MLB_NOLDO	
	=PPSPD_S0_MEM -	28A7 29A3 29A7 64A6
	@mlb_noldo_lib.MLB_NOLDO	
	=PP3V3_S0_CK410 -	32C7 32D3 32D8 64A6
	@mlb_noldo_lib.MLB_NOLDO	
	=PP3V3_S0_AIRPORT -	43C3 64A6
	@mlb_noldo_lib.MLB_NOLDO	
	=PP3V3_S0_TPM -	53D4 64A6
	@mlb_noldo_lib.MLB_NOLDO	
	=PP3V3_S0_AUDIO -	54A6 54D7 56D8 57B5 64A6
	@mlb_noldo_lib.MLB_NOLDO	
	=PP3V3_S0_TMDS -	64A6 68B1 68B2 68C8 68C8
	@mlb_noldo_lib.MLB_NOLDO	68D8 68D8 69B7 69D1 69D5
	=PP3V3_S0_THRM_SNR -	10C4 49B3 49D3 64A6
	@mlb_noldo_lib.MLB_NOLDO	
	=PP3V3_S0_IMVP6 -	58D8 64A6
	@mlb_noldo_lib.MLB_NOLDO	
	=PP3V3_S0_NB_VCC_HV -	17C6 19B7 19C7 64B6
	@mlb_noldo_lib.MLB_NOLDO	
	=PP3V3_S0_FET -	63C3 64B8
	@mlb_noldo_lib.MLB_NOLDO	
	PP3V3_S0 - @mlb_noldo_lib.MLB_NOLDO	5A2 64B7
	=PPSPD_S0_MEM -	28A7 29A3 29A7 64A6
	@mlb_noldo_lib.MLB_NOLDO	
	=PP3V3_S0_TPM -	53D4 64A6
	@mlb_noldo_lib.MLB_NOLDO	
	=PP3V3_S0_TMDS -	64A6 68B1 68B2 68C8 68C8
	@mlb_noldo_lib.MLB_NOLDO	68D8 68D8 69B7 69D1 69D5
	=PP3V3_S0_THRM_SNR -	10C4 49B3 49D3 64A6
	@mlb_noldo_lib.MLB_NOLDO	
	=PP3V3_S0_SMC_LS -	46D3 64A6
	@mlb_noldo_lib.MLB_NOLDO	
	=PP3V3_S0_SMBUS_SMC_MLB -	27C5 64A6
	@mlb_noldo_lib.MLB_NOLDO	
	=PP3V3_S0_SMBUS_SMC_BSB -	27B1 64A6
	@mlb_noldo_lib.MLB_NOLDO	
	=PP3V3_S0_SMBUS_SMC_0 -	27D5 64A6
	@mlb_noldo_lib.MLB_NOLDO	
	=PP3V3_S0_SMBUS_SB -	27D8 64A6
	@mlb_noldo_lib.MLB_NOLDO	
	=PP3V3_S0_SB_VCCLAN3_3 -	24D3 25D3 64A6
	@mlb_noldo_lib.MLB_NOLDO	
	=PP3V3_S0_SB_VCC3_3_PCI -	24B3 25A4 64B6
	@mlb_noldo_lib.MLB_NOLDO	
	=PP3V3_S0_SB_VCC3_3_IDE -	24C3 25B4 64B6
	@mlb_noldo_lib.MLB_NOLDO	
	=PP3V3_S0_SB_VCC3_3 -	24B5 24B5 25B8 25C6 64B6
	@mlb_noldo_lib.MLB_NOLDO	
	=PP3V3_S0_SB_PM -	26B6 26B8 64B6
	@mlb_noldo_lib.MLB_NOLDO	
	=PP3V3_S0_SB_PCI -	26D1 64B6
	@mlb_noldo_lib.MLB_NOLDO	
	=PP3V3_S0_SB_GPIO -	21C3 21D3 23B2 23D5 64B6
	@mlb_noldo_lib.MLB_NOLDO	
	=PP3V3_S0_SB_3V3_1V5_VCCHDA -	24C3 25C4 64A6
	@mlb_noldo_lib.MLB_NOLDO	
	=PP3V3_S0_SB -	22B5 25D8 34C8 64B6
	@mlb_noldo_lib.MLB_NOLDO	
	=PP3V3_S0_RSTBUF -	26B4 64A6
	@mlb_noldo_lib.MLB_NOLDO	
	=PP3V3_S0_PDCISENS -	62A5 64A6 66C4
	@mlb_noldo_lib.MLB_NOLDO	
	=PP3V3_S0_PBATTISENS -	64A6 66B3

	@mlb_noldo_lib.MLB_NOLDO	
	=PP3V3_S0_PATA -	34C2 64A6
	@mlb_noldo_lib.MLB_NOLDO	
	=PP3V3_S0_NB_VCC_HV -	17C6 19B7 19C7 64B6
	@mlb_noldo_lib.MLB_NOLDO	
	=PP3V3_S0_NB -	14C7 14D6 19C7 20A4 20B4
	@mlb_noldo_lib.MLB_NOLDO	20B4 64A6
	=PP3V3_S0_LCD -	64A6 67B5 67B5 67B7 67C6
	@mlb_noldo_lib.MLB_NOLDO	
	=PP3V3_S0_IMVP6 -	58D8 64A6
	@mlb_noldo_lib.MLB_NOLDO	
	=PP3V3_S0_FW -	39C6 64A6
	@mlb_noldo_lib.MLB_NOLDO	
	=PP3V3_S0_FET -	63C3 64B8
	@mlb_noldo_lib.MLB_NOLDO	
	=PP3V3_S0_ENET -	36C8 64A6
	@mlb_noldo_lib.MLB_NOLDO	
	=PP3V3_S0_CPUPOWER -	48C2 64A6
	@mlb_noldo_lib.MLB_NOLDO	
	=PP3V3_S0_CK410 -	32C7 32D3 32D8 64A6
	@mlb_noldo_lib.MLB_NOLDO	
	=PP3V3_S0_AUDIO -	54A6 54D7 56D8 57B5 64A6
	@mlb_noldo_lib.MLB_NOLDO	
	=PP3V3_S0_ALLSYSPG -	63B1 64A6
	@mlb_noldo_lib.MLB_NOLDO	
	=PP3V3_S0_AIRPORT -	43C3 64A6
	@mlb_noldo_lib.MLB_NOLDO	
	=PP3V3_S0_2V5S0 -	60C4 64A6
	@mlb_noldo_lib.MLB_NOLDO	
	=PP3V3_S0_1V51V05S0 -	62B1 64A6
	@mlb_noldo_lib.MLB_NOLDO	
=PP3V42_G3H_LPCPLUS	=PP3V42_G3H_LPCPLUS -	5D2 47C6 64D1
	@mlb_noldo_lib.MLB_NOLDO	
	=PP3V42_G3H_SMCVREF -	46C8 64D1
	@mlb_noldo_lib.MLB_NOLDO	
	=PP3V42_G3H_SMC -	45D2 45D3 45D3 46D1 46D5
	@mlb_noldo_lib.MLB_NOLDO	46D8 48C8 64D1
	=PP3V42_G3H_SB_RTC -	26D6 64D1
	@mlb_noldo_lib.MLB_NOLDO	
	=PP3V42_G3H_ACIN -	64D1 65C4 65C8 66A5
	@mlb_noldo_lib.MLB_NOLDO	
	=PP3V42_G3H_SMC_CLK -	46A8 64D1
	@mlb_noldo_lib.MLB_NOLDO	
	=PP3V42_G3H_LIDSWITCH -	64D1 65A8
	@mlb_noldo_lib.MLB_NOLDO	
	=PP3V42_G3H_REG -	63D1 64D3
	@mlb_noldo_lib.MLB_NOLDO	
	=PP3V42_G3H_SMBUS_SMC_BSA -	27C3 64D1
	@mlb_noldo_lib.MLB_NOLDO	
	=PP3V42_G3H_PWRCTL -	63B8 63C8 64D1
	@mlb_noldo_lib.MLB_NOLDO	
	PP3V42_G3H -	5A2 64D1
	@mlb_noldo_lib.MLB_NOLDO	
	=PP3V42_G3H_SMC_CLK -	46A8 64D1
	@mlb_noldo_lib.MLB_NOLDO	
	=PP3V42_G3H_SMCVREF -	46C8 64D1
	@mlb_noldo_lib.MLB_NOLDO	
	=PP3V42_G3H_SMC -	45D2 45D3 45D3 46D1 46D5
	@mlb_noldo_lib.MLB_NOLDO	46D8 48C8 64D1
	=PP3V42_G3H_SMBUS_SMC_BSA -	27C3 64D1
	@mlb_noldo_lib.MLB_NOLDO	
	=PP3V42_G3H_SB_RTC -	26D6 64D1
	@mlb_noldo_lib.MLB_NOLDO	
	=PP3V42_G3H_REG -	63D1 64D3
	@mlb_noldo_lib.MLB_NOLDO	
	=PP3V42_G3H_PWRCTL -	63B8 63C8 64D1
	@mlb_noldo_lib.MLB_NOLDO	
	=PP3V42_G3H_LIDSWITCH -	64D1 65A8
	@mlb_noldo_lib.MLB_NOLDO	
	=PP3V42_G3H_ACIN -	64D1 65C4 65C8 66A5
	@mlb_noldo_lib.MLB_NOLDO	
=PP5V_S0_FAN_RT	=PP5V_S0_FAN_RT -	5D2 51C4 64D3
	@mlb_noldo_lib.MLB_NOLDO	
	=PP5V_S0_ISENSECAL -	48A8 64D3
	@mlb_noldo_lib.MLB_NOLDO	
	=PP5V_S0_LCD -	64D3 67D7
	@mlb_noldo_lib.MLB_NOLDO	
	=PP5V_S0_TMDS -	64D3 68B7 69C6
	@mlb_noldo_lib.MLB_NOLDO	
	=PP5V_S0_IMVP6 -	58D8 64D3
	@mlb_noldo_lib.MLB_NOLDO	
	=PP5V_1V51V05S0_VCC -	62A8 64D3
	@mlb_noldo_lib.MLB_NOLDO	
	=PP5V_S0_NB_TVDAC -	19C4 19C7 64D3
	@mlb_noldo_lib.MLB_NOLDO	
	=PP5V_S0_LPCPLUS -	5D2 47C6 64D3
	@mlb_noldo_lib.MLB_NOLDO	
	=PP5V_S0_AUDIO_PWR -	55B8 55B8 55D8 64D3
	@mlb_noldo_lib.MLB_NOLDO	
	=PP5V_S0_AUDIO -	54A6 55C8 64D3
	@mlb_noldo_lib.MLB_NOLDO	
	=PP5V_S0_MEMVTT -	31C6 64D3
	@mlb_noldo_lib.MLB_NOLDO	
	=PP5V_S0_FET -	63C3 64D6
	@mlb_noldo_lib.MLB_NOLDO	
	=PP5V_S0_SATA -	35C6 64D3
	@mlb_noldo_lib.MLB_NOLDO	
	=PP5V_S0_SB -	25D8 64D3
	@mlb_noldo_lib.MLB_NOLDO	
	PP5V_S0 - @mlb_noldo_lib.MLB_NOLDO	5A2 64D4
	=PP5V_S0_TMDS -	64D3 68B7 69C6
	@mlb_noldo_lib.MLB_NOLDO	
	=PP5V_S0_SB -	25D8 64D3
	@mlb_noldo_lib.MLB_NOLDO	
	=PP5V_S0_SATA -	35C6 64D3
	@mlb_noldo_lib.MLB_NOLDO	
	=PP5V_S0_NB_TVDAC -	19C4 19C7 64D3
	@mlb_noldo_lib.MLB_NOLDO	
	=PP5V_S0_MEMVTT -	31C6 64D3
	@mlb_noldo_lib.MLB_NOLDO	
	=PP5V_S0_LPCPLUS -	5D2 47C6 64D3
	@mlb_noldo_lib.MLB_NOLDO	
	=PP5V_S0_LCD -	64D3 67D7
	@mlb_noldo_lib.MLB_NOLDO	
	=PP5V_S0_ISENSECAL -	48A8 64D3
	@mlb_noldo_lib.MLB_NOLDO	
	=PP5V_S0_IMVP6 -	58D8 64D3
	@mlb_noldo_lib.MLB_NOLDO	
	=PP5V_S0_FET -	63C3 64D6
	@mlb_noldo_lib.MLB_NOLDO	
	=PP5V_S0_AUDIO_PWR -	55B8 55B8 55D8 64D3
	@mlb_noldo_lib.MLB_NOLDO	
	=PP5V_S0_AUDIO -	54A6 55C8 64D3
	@mlb_noldo_lib.MLB_NOLDO	

	=PP5V_1V51V05S0_VCC -	62A8 64D3
	@mlb_noldo_lib.MLB_NOLDO	
=PP5V_S0_IDE_PATA	=PP5V_S0_IDE_PATA -	34C5
	@mlb_noldo_lib.MLB_NOLDO	
	PP5V_S0_IDE_PATA -	34D3
	@mlb_noldo_lib.MLB_NOLDO	
=PPDCIN_G3H	=PPDCIN_G3H -	64B3 65D3
	@mlb_noldo_lib.MLB_NOLDO	
	=PPVBATT_G3H -	64B3 66B2
	@mlb_noldo_lib.MLB_NOLDO	
	=PPVIN_G3H_P3V42G3H -	63D3 64B1
	@mlb_noldo_lib.MLB_NOLDO	
	PPDCIN_G3H -	64B1
	@mlb_noldo_lib.MLB_NOLDO	
	=PPVIN_G3H_P3V42G3H -	63D3 64B1
	@mlb_noldo_lib.MLB_NOLDO	
	=PPVBATT_G3H -	64B3 66B2
	@mlb_noldo_lib.MLB_NOLDO	
=SMBUS_ATS_SCL	=SMBUS_ATS_SCL -	27D1 67A2
	@mlb_noldo_lib.MLB_NOLDO	
	SMBUS_SMC_RMT_SCL -	27D2
	@mlb_noldo_lib.MLB_NOLDO	
	SMB_RMT_CLK -	27D3 45B5
	@mlb_noldo_lib.MLB_NOLDO	
	SMBUS_SMC_RMT_SCL -	27D2
	@mlb_noldo_lib.MLB_NOLDO	
=SMBUS_ATS_SDA	=SMBUS_ATS_SDA -	27C1 67A2
	@mlb_noldo_lib.MLB_NOLDO	
	SMBUS_SMC_RMT_SDA -	27D2
	@mlb_noldo_lib.MLB_NOLDO	
	SMB_RMT_DATA -	27D3 45B5
	@mlb_noldo_lib.MLB_NOLDO	
	SMBUS_SMC_RMT_SDA -	27D2
	@mlb_noldo_lib.MLB_NOLDO	
=SMB_AIRPORT_CLK	=SMB_AIRPORT_CLK -	27C6 43B4
	@mlb_noldo_lib.MLB_NOLDO	
	=SMB_GEYSER_CLK -	27B6 40C4
	@mlb_noldo_lib.MLB_NOLDO	
	SMBUS_SB_SCL -	27D7
	@mlb_noldo_lib.MLB_NOLDO	
	=I2C_SODIMMB_SCL -	27C6 29A6
	@mlb_noldo_lib.MLB_NOLDO	
	SMB_CLK - @mlb_noldo_lib.MLB_NOLDO	23D5 27D8
	=I2C_SODIMMA_SCL -	27D6 28A6
	@mlb_noldo_lib.MLB_NOLDO	
	SMB_CK410_CLK -	27D6 32B6
	@mlb_noldo_lib.MLB_NOLDO	
	SMB_CLK - @mlb_noldo_lib.MLB_NOLDO	23D5 27D8
	SMB_CK410_CLK -	27D6 32B6
	@mlb_noldo_lib.MLB_NOLDO	
	SMBUS_SB_SCL -	27D7
	@mlb_noldo_lib.MLB_NOLDO	
	=SMB_GEYSER_CLK -	27B6 40C4
	@mlb_noldo_lib.MLB_NOLDO	
	=I2C_SODIMMB_SCL -	27C6 29A6
	@mlb_noldo_lib.MLB_NOLDO	
	=I2C_SODIMMA_SCL -	27D6 28A6
	@mlb_noldo_lib.MLB_NOLDO	
=SMB_AIRPORT_DATA	=SMB_AIRPORT_DATA -	27C6 43B4
	@mlb_noldo_lib.MLB_NOLDO	
	=SMB_GEYSER_DATA -	27B6 40C4
	@mlb_noldo_lib.MLB_NOLDO	
	SMBUS_SB_SDA -	27D7
	@mlb_noldo_lib.MLB_NOLDO	
	=I2C_SODIMMB_SDA -	27C6 29A6
	@mlb_noldo_lib.MLB_NOLDO	
	=I2C_SODIMMA_SDA -	27D6 28A6
	@mlb_noldo_lib.MLB_NOLDO	
	SMB_DATA - @mlb_noldo_lib.MLB_NOLDO	23D5 27D8
	=I2C_SODIMMA_SDA -	27C6 28A6
	@mlb_noldo_lib.MLB_NOLDO	
	SMB_CK410_DATA -	27D6 32B6
	@mlb_noldo_lib.MLB_NOLDO	
	SMB_DATA - @mlb_noldo_lib.MLB_NOLDO	23D5 27D8
	SMB_CK410_DATA -	27D6 32B6
	@mlb_noldo_lib.MLB_NOLDO	
	SMBUS_SB_SDA -	27D7
	@mlb_noldo_lib.MLB_NOLDO	
	=SMB_GEYSER_DATA -	27B6 40C4
	@mlb_noldo_lib.MLB_NOLDO	
	=I2C_SODIMMB_SDA -	27C6 29A6
	@mlb_noldo_lib.MLB_NOLDO	
	=I2C_SODIMMA_SDA -	27C6 28A6
	@mlb_noldo_lib.MLB_NOLDO	
=USB2_AIRPORT_N	=USB2_AIRPORT_N -	6B2 43B4
	@mlb_noldo_lib.MLB_NOLDO	
	USB_H_N - @mlb_noldo_lib.MLB_NOLDO	6B1 22C2
	USB2_AIRPORT_N -	6B2
	@mlb_noldo_lib.MLB_NOLDO	
=USB2_AIRPORT_P	=USB2_AIRPORT_P -	6B2 43B4
	@mlb_noldo_lib.MLB_NOLDO	
	USB_H_P - @mlb_noldo_lib.MLB_NOLDO	6B1 22C2
	USB2_AIRPORT_P -	6B2
	@mlb_noldo_lib.MLB_NOLDO	
=USB2_CAMERA_N	=USB2_CAMERA_N -	6C2 67A4
	@mlb_noldo_lib.MLB_NOLDO	
	USB_D_N - @mlb_noldo_lib.MLB_NOLDO	6C1 22C2
	USB2_CAMERA_N -	6C2
	@mlb_noldo_lib.MLB_NOLDO	
=USB2_CAMERA_P	=USB2_CAMERA_P -	6C2 67B4
	@mlb_noldo_lib.MLB_NOLDO	
	USB_D_P - @mlb_noldo_lib.MLB_NOLDO	6C1 22C2
	USB2_CAMERA_P -	6C2
	@mlb_noldo_lib.MLB_NOLDO	
ACIN_1V20_REF	ACIN_1V20_REF -	65C4
	@mlb_noldo_lib.MLB_NOLDO	
ACIN_DIV	ACIN_DIV - @mlb_noldo_lib.MLB_NOLDO	65C4
ACIN_ENABLE_GATE	ACIN_ENABLE_GATE -	5C1 65C3
	@mlb_noldo_lib.MLB_NOLDO	
ACIN_ENABLE_L	ACIN_ENABLE_L -	65C2
	@mlb_noldo_lib.MLB_NOLDO	
ACIN_ENABLE_L_DIV	ACIN_ENABLE_L_DIV -	65C1
	@mlb_noldo_lib.MLB_NOLDO	
ACZ_BITCLK	ACZ_BITCLK -	5C1 21C7 54D7
	@mlb_noldo_lib.MLB_NOLDO	
ACZ_RST_L	ACZ_RST_L -	5C1 21C7 54C7 57C3
	@mlb_noldo_lib.MLB_NOLDO	
ACZ_SDATAIN<0>	ACZ_SDATAIN<0> -	5D1 21C7 54D7
	@mlb_noldo_lib.MLB_NOLDO	
ACZ_SDATAOUT	ACZ_SDATAOUT -	5D1 21C7 54D7
	@mlb_noldo_lib.MLB_NOLDO	
ACZ_SYNC	ACZ_SYNC - @mlb_noldo_lib.MLB_NOLDO	5C1 21C7 54D7
ADAPTER_SENSE	ADAPTER_SENSE -	65C7
	@mlb_noldo_lib.MLB_NOLDO	
AIRPORT_CLK100M_PCIE	AIRPORT_CLK100M_PCIE_N -	33B2 33C4 43C6
_N	@mlb_noldo_lib.MLB_NOLDO	

AIRPORT_CLK100M_PCIE	AIRPORT_CLK100M_PCIE_P -	33B2 33D4 43C6
_P	@mlb_noldo_lib.MLB_NOLDO	
AIRPORT_RST_L	AIRPORT_RST_L -	26B1 43C4
	@mlb_noldo_lib.MLB_NOLDO	
ALL_SYS_PWRGD	ALL_SYS_PWRGD -	5B2 26A5 45D8 63B1
	@mlb_noldo_lib.MLB_NOLDO	
ALS_GAIN	ALS_GAIN - @mlb_noldo_lib.MLB_NOLDO	45B5 46C6
ALS_LEFT	ALS_LEFT - @mlb_noldo_lib.MLB_NOLDO	5A7 45A8 46C3
ALS_RIGHT	ALS_RIGHT -	45A8 46C3
	@mlb_noldo_lib.MLB_NOLDO	
AUDIO_SHIELD_PLANE	AUDIO_SHIELD_PLANE -	56C3
	@mlb_noldo_lib.MLB_NOLDO	
AUD_4V5_SHDN_L	AUD_4V5_SHDN_L -	54A5
	@mlb_noldo_lib.MLB_NOLDO	
AUD_ALC_COUT	AUD_ALC_COUT -	54B5
	@mlb_noldo_lib.MLB_NOLDO	
AUD_ANALOG_FILT_1	AUD_ANALOG_FILT_1 -	54C4
	@mlb_noldo_lib.MLB_NOLDO	
AUD_ANALOG_FILT_2	AUD_ANALOG_FILT_2 -	54C4
	@mlb_noldo_lib.MLB_NOLDO	
AUD_BI_PORT_A_L	AUD_BI_PORT_A_L -	54C1 57C3
	@mlb_noldo_lib.MLB_NOLDO	
AUD_BI_PORT_A_R	AUD_BI_PORT_A_R -	54C1 57B3
	@mlb_noldo_lib.MLB_NOLDO	
AUD_BI_PORT_B_L	AUD_BI_PORT_B_L -	54C1 57A6
	@mlb_noldo_lib.MLB_NOLDO	
	AUD_BI_PORT_B_R -	54C1 57A6
	@mlb_noldo_lib.MLB_NOLDO	
AUD_BI_PORT_C_L	AUD_BI_PORT_C_L -	54C7 55B8
	@mlb_noldo_lib.MLB_NOLDO	
AUD_BI_PORT_C_R	AUD_BI_PORT_C_R -	54C7 55C8
	@mlb_noldo_lib.MLB_NOLDO	
AUD_BI_PORT_D_L	AUD_BI_PORT_D_L -	54C7 57A5
	@mlb_noldo_lib.MLB_NOLDO	
AUD_BI_PORT_D_R	AUD_BI_PORT_D_R -	54C7 55A8
	@mlb_noldo_lib.MLB_NOLDO	
AUD_BI_PORT_E_L	AUD_BI_PORT_E_L -	54C1 57A5
	@mlb_noldo_lib.MLB_NOLDO	
AUD_BI_PORT_E_R	AUD_BI_PORT_E_R -	54C1 57A5
	@mlb_noldo_lib.MLB_NOLDO	
AUD_BI_PORT_F_L	AUD_BI_PORT_F_L -	54C1 57B3
	@mlb_noldo_lib.MLB_NOLDO	
AUD_BI_PORT_F_R	AUD_BI_PORT_F_R -	54C1 57A3
	@mlb_noldo_lib.MLB_NOLDO	
AUD_BYPASS	AUD_BYPASS -	54C4
	@mlb_noldo_lib.MLB_NOLDO	
AUD_CONNJ1_RING	AUD_CONNJ1_RING -	56C7
	@mlb_noldo_lib.MLB_NOLDO	
AUD_CONNJ1_RING_F	AUD_CONNJ1_RING_F -	56C6
	@mlb_noldo_lib.MLB_NOLDO	
AUD_CONNJ1_SLEEVE	AUD_CONNJ1_SLEEVE -	56D7
	@mlb_noldo_lib.MLB_NOLDO	
AUD_CONNJ1_SLEEVEDET	AUD_CONNJ1_SLEEVEDET -	56C7
	@mlb_noldo_lib.MLB_NOLDO	
AUD_CONNJ1_SLEEVEDET	AUD_CONNJ1_SLEEVEDET_F -	56C6
_F	@mlb_noldo_lib.MLB_NOLDO	
AUD_CONNJ1_SLEEVE_F	AUD_CONNJ1_SLEEVE_F -	56D5
	@mlb_noldo_lib.MLB_NOLDO	
AUD_CONNJ1_TIP	AUD_CONNJ1_TIP -	56C7
	@mlb_noldo_lib.MLB_NOLDO	
AUD_CONNJ1_TIPDET	AUD_CONNJ1_TIPDET -	56D7
	@mlb_noldo_lib.MLB_NOLDO	
AUD_CONNJ1_TIPDET_F	AUD_CONNJ1_TIPDET_F -	56D6
	@mlb_noldo_lib.MLB_NOLDO	
AUD_CONNJ1_TIP_F	AUD_CONNJ1_TIP_F -	56C6
	@mlb_noldo_lib.MLB_NOLDO	
AUD_CONNJ2_RING	AUD_CONNJ2_RING -	56B7
	@mlb_noldo_lib.MLB_NOLDO	
AUD_CONNJ2_RING_F	AUD_CONNJ2_RING_F -	56B6
	@mlb_noldo_lib.MLB_NOLDO	
AUD_CONNJ2_SLEEVE	AUD_CONNJ2_SLEEVE -	56B7
	@mlb_noldo_lib.MLB_NOLDO	
AUD_CONNJ2_SLEEVEDET	AUD_CONNJ2_SLEEVEDET -	56A7
	@mlb_noldo_lib.MLB_NOLDO	
AUD_CONNJ2_SLEEVEDET	AUD_CONNJ2_SLEEVEDET_F -	56A6
_F	@mlb_noldo_lib.MLB_NOLDO	
AUD_CONNJ2_SLEEVE_F	AUD_CONNJ2_SLEEVE_F -	56B6
	@mlb_noldo_lib.MLB_NOLDO	
AUD_CONNJ2_TIP	AUD_CONNJ2_TIP -	56B7
	@mlb_noldo_lib.MLB_NOLDO	
AUD_CONNJ2_TIPDET	AUD_CONNJ2_TIPDET -	56B7
	@mlb_noldo_lib.MLB_NOLDO	
AUD_CONNJ2_TIPDET_F	AUD_CONNJ2_TIPDET_F -	56B6
	@mlb_noldo_lib.MLB_NOLDO	
AUD_CONNJ2_TIP_F	AUD_CONNJ2_TIP_F -	56B6
	@mlb_noldo_lib.MLB_NOLDO	
AUD_GPIO_0	AUD_GPIO_0 -	54B8 55A8
	@mlb_noldo_lib.MLB_NOLDO	
AUD_GPIO_0_R	AUD_GPIO_0_R -	54B7 54C7
	@mlb_noldo_lib.MLB_NOLDO	
AUD_GPIO_1	AUD_GPIO_1 -	54B8 57C3
	@mlb_noldo_lib.MLB_NOLDO	
AUD_GPIO_1_R	AUD_GPIO_1_R -	54A7 54C7
	@mlb_noldo_lib.MLB_NOLDO	
AUD_GPIO_2	AUD_GPIO_2 -	54C7
	@mlb_noldo_lib.MLB_NOLDO	
AUD_INJACK_INSERT_L	AUD_INJACK_INSERT_L -	57C7
	@mlb_noldo_lib.MLB_NOLDO	
AUD_J1_COM	AUD_J1_COM -	56C4
	@mlb_noldo_lib.MLB_NOLDO	
AUD_J1_DET_RC	AUD_J1_DET_RC -	57D7
	@mlb_noldo_lib.MLB_NOLDO	
AUD_J1_SLEEVEDET_INV	AUD_J1_SLEEVEDET_INV -	57C7
	@mlb_noldo_lib.MLB_NOLDO	
AUD_J1_SLEEVEDET_R	AUD_J1_SLEEVEDET_R -	56C3 57C6 57C8
	@mlb_noldo_lib.MLB_NOLDO	
AUD_J1_TIPDET_R	AUD_J1_TIPDET_R -	56C3 57D8
	@mlb_noldo_lib.MLB_NOLDO	
AUD_J2_COM	AUD_J2_COM -	56B4
	@mlb_noldo_lib.MLB_NOLDO	
AUD_J2_DET_RC	AUD_J2_DET_RC -	57B7
	@mlb_noldo_lib.MLB_NOLDO	
AUD_J2_OPT_OUT	AUD_J2_OPT_OUT -	56B7
	@mlb_noldo_lib.MLB_NOLDO	
AUD_J2_SLEEVEDET_R	AUD_J2_SLEEVEDET_R -	56A4 57B8
	@mlb_noldo_lib.MLB_NOLDO	
AUD_J2_TIPDET_R	AUD_J2_TIPDET_R -	56A4 57B8
	@mlb_noldo_lib.MLB_NOLDO	
AUD_JDREF	AUD_JDREF -	54C4
	@mlb_noldo_lib.MLB_NOLDO	
AUD_OUTJACK_INSERT_L	AUD_OUTJACK_INSERT_L -	57D7
	@mlb_noldo_lib.MLB_NOLDO	
AUD_PORTA_DET_L	AUD_PORTA_DET_L -	57D5
	@mlb_noldo_lib.MLB_NOLDO	

AUD_PORTA_L	AUD_PORTA_L -	56C3 57D1
	@mlb_noldo_lib.MLB_NOLDO	
AUD_PORTA_L_R	AUD_PORTA_L_R -	57B1 57D3
	@mlb_noldo_lib.MLB_NOLDO	
AUD_PORTA_R	AUD_PORTA_R -	56C3 57C1
	@mlb_noldo_lib.MLB_NOLDO	
AUD_PORTA_R_R	AUD_PORTA_R_R -	57B1 57C3
	@mlb_noldo_lib.MLB_NOLDO	
AUD_PORTE_DET_L	AUD_PORTE_DET_L -	57D5
	@mlb_noldo_lib.MLB_NOLDO	
AUD_PORTF_L	AUD_PORTF_L -	56B4 57B1
	@mlb_noldo_lib.MLB_NOLDO	
AUD_PORTF_L_R	AUD_PORTF_L_R -	57B2
	@mlb_noldo_lib.MLB_NOLDO	
AUD_PORTF_R	AUD_PORTF_R -	56B4 57A1
	@mlb_noldo_lib.MLB_NOLDO	
AUD_PORTF_R_R	AUD_PORTF_R_R -	57A2
	@mlb_noldo_lib.MLB_NOLDO	
AUD_PORTG_DET_L	AUD_PORTG_DET_L -	57C5
	@mlb_noldo_lib.MLB_NOLDO	
AUD_SENSE_A	AUD_SENSE_A -	54C1 57C5 57D8
	@mlb_noldo_lib.MLB_NOLDO	
AUD_SENSE_B	AUD_SENSE_B -	54C1 57C4 57C8 57D8
	@mlb_noldo_lib.MLB_NOLDO	
AUD_SPDIF_IN	AUD_SPDIF_IN -	54C1 56B3
	@mlb_noldo_lib.MLB_NOLDO	
AUD_SPDIF_OUT	AUD_SPDIF_OUT -	54D1 56D3
	@mlb_noldo_lib.MLB_NOLDO	
AUD_SPDIF_OUT_R	AUD_SPDIF_OUT_R -	54D4
	@mlb_noldo_lib.MLB_NOLDO	
AUD_SPKRAMP_INL	AUD_SPKRAMP_INL -	55B6
	@mlb_noldo_lib.MLB_NOLDO	
AUD_SPKRAMP_INL_L	AUD_SPKRAMP_INL_L -	55B7
	@mlb_noldo_lib.MLB_NOLDO	
AUD_SPKRAMP_INR	AUD_SPKRAMP_INR -	55C6
	@mlb_noldo_lib.MLB_NOLDO	
AUD_SPKRAMP_INR_L	AUD_SPKRAMP_INR_L -	55C7
	@mlb_noldo_lib.MLB_NOLDO	
AUD_SPKRAMP_INSUB	AUD_SPKRAMP_INSUB -	55A6
	@mlb_noldo_lib.MLB_NOLDO	
AUD_SPKRAMP_INSUB_L	AUD_SPKRAMP_INSUB_L -	55A7
	@mlb_noldo_lib.MLB_NOLDO	
AUD_SPKRAMP_SHUTDOWN	AUD_SPKRAMP_SHUTDOWN_L -	55A6 55B8 55C8
_L	@mlb_noldo_lib.MLB_NOLDO	
AUD_VREF_FILT	AUD_VREF_FILT -	54C4
	@mlb_noldo_lib.MLB_NOLDO	
AUD_VREF_PORT_B	AUD_VREF_PORT_B -	54C1 57A6
	@mlb_noldo_lib.MLB_NOLDO	
BAL_IN_COM	BAL_IN_COM -	54C7 57A3
	@mlb_noldo_lib.MLB_NOLDO	
BAL_IN_L	BAL_IN_L - @mlb_noldo_lib.MLB_NOLDO	54C7 57A3
BAL_IN_R	BAL_IN_R - @mlb_noldo_lib.MLB_NOLDO	54C7 57A3
BATT_ENABLE_L	BATT_ENABLE_L -	66A4
	@mlb_noldo_lib.MLB_NOLDO	
BATT_FET_DRAIN	BATT_FET_DRAIN -	66A5
	@mlb_noldo_lib.MLB_NOLDO	
BATT_FET_GATE	BATT_FET_GATE -	66A4
	@mlb_noldo_lib.MLB_NOLDO	
BATT_IN	BATT_IN - @mlb_noldo_lib.MLB_NOLDO	5D1
BATT_ISENSE	BATT_ISENSE -	66B2
	@mlb_noldo_lib.MLB_NOLDO	
BATT_NEG	BATT_NEG - @mlb_noldo_lib.MLB_NOLDO	5D1 65A6
BATT_POS	BATT_POS - @mlb_noldo_lib.MLB_NOLDO	5D1 65A6
BATT_POS_F	BATT_POS_F -	65A2 66B2
	@mlb_noldo_lib.MLB_NOLDO	
BATT_RC	BATT_RC - @mlb_noldo_lib.MLB_NOLDO	66A5
BEEP	BEEP - @mlb_noldo_lib.MLB_NOLDO	54C6
BIOS_REC	BIOS_REC - @mlb_noldo_lib.MLB_NOLDO	23A6 23C5
BKLIGHT_CTL	BKLIGHT_CTL -	67C4
	@mlb_noldo_lib.MLB_NOLDO	
BOOT_LPC_SPI_L	BOOT_LPC_SPI_L -	5C2 22B3 45C8 47C6
	@mlb_noldo_lib.MLB_NOLDO	
BYPASS_R_DRV	BYPASS_R_DRV -	66A3
	@mlb_noldo_lib.MLB_NOLDO	
BYPASS_R_GATE	BYPASS_R_GATE -	66A3
	@mlb_noldo_lib.MLB_NOLDO	
CHASSIS_AUDIO_JACK_I	CHASSIS_AUDIO_JACK_ISOL -	56A3 56A8 56B1 56B6 56B6
SOL	@mlb_noldo_lib.MLB_NOLDO	56C1 56C1 56C8
CHGR_ACLIM	CHGR_ACLIM -	66C6
	@mlb_noldo_lib.MLB_NOLDO	
CHGR_ACPRN	CHGR_ACPRN -	66B6
	@mlb_noldo_lib.MLB_NOLDO	
CHGR_ACSET	CHGR_ACSET -	66C6
	@mlb_noldo_lib.MLB_NOLDO	
CHGR_ACSET_RC	CHGR_ACSET_RC -	66C8
	@mlb_noldo_lib.MLB_NOLDO	
CHGR_BGATE	CHGR_BGATE -	66C5
	@mlb_noldo_lib.MLB_NOLDO	
CHGR_BOOT	CHGR_BOOT -	66C5
	@mlb_noldo_lib.MLB_NOLDO	
CHGR_BOOT_RC	CHGR_BOOT_RC -	66C4
	@mlb_noldo_lib.MLB_NOLDO	
CHGR_CHLIM	CHGR_CHLIM -	66B6
	@mlb_noldo_lib.MLB_NOLDO	
CHGR_CSIN	CHGR_CSIN -	66C5
	@mlb_noldo_lib.MLB_NOLDO	
CHGR_CSON	CHGR_CSON -	66C6
	@mlb_noldo_lib.MLB_NOLDO	
CHGR_CSOP	CHGR_CSOP -	66C6
	@mlb_noldo_lib.MLB_NOLDO	
CHGR_DCIN	CHGR_DCIN -	66C5
	@mlb_noldo_lib.MLB_NOLDO	
CHGR_DCPRN	CHGR_DCPRN -	66B5
	@mlb_noldo_lib.MLB_NOLDO	
CHGR_DCSET	CHGR_DCSET -	66B5
	@mlb_noldo_lib.MLB_NOLDO	
CHGR_EN	CHGR_EN - @mlb_noldo_lib.MLB_NOLDO	66B5
CHGR_EN_L	CHGR_EN_L -	66A6
	@mlb_noldo_lib.MLB_NOLDO	
CHGR_ICM	CHGR_ICM - @mlb_noldo_lib.MLB_NOLDO	66C6
CHGR_ICM_R	CHGR_ICM_R -	66C6
	@mlb_noldo_lib.MLB_NOLDO	
CHGR_ICOMP	CHGR_ICOMP -	66C6
	@mlb_noldo_lib.MLB_NOLDO	
CHGR_ICOMP_RC	CHGR_ICOMP_RC -	66C7
	@mlb_noldo_lib.MLB_NOLDO	
CHGR_LGATE	CHGR_LGATE -	66C5
	@mlb_noldo_lib.MLB_NOLDO	
CHGR_PHASE	CHGR_PHASE -	66C5
	@mlb_noldo_lib.MLB_NOLDO	
CHGR_PHASE_RC	CHGR_PHASE_RC -	66B4
	@mlb_noldo_lib.MLB_NOLDO	
CHGR_SGATE	CHGR_SGATE -	66C5
	@mlb_noldo_lib.MLB_NOLDO	

CHGR_UGATE	CHGR_UGATE - @mlb_noldo_lib.MLB_NOLDO	66C5
CHGR_VADJ	CHGR_VADJ - @mlb_noldo_lib.MLB_NOLDO	66B6 66C6
CHGR_VCOMP	CHGR_VCOMP - @mlb_noldo_lib.MLB_NOLDO	66C6
CHGR_VCOMP_CC	CHGR_VCOMP_CC - @mlb_noldo_lib.MLB_NOLDO	66C7
CHGR_VCOMP_RC	CHGR_VCOMP_RC - @mlb_noldo_lib.MLB_NOLDO	66C7
CHGR_VDD	CHGR_VDD - @mlb_noldo_lib.MLB_NOLDO	66B6 66D6
CHGR_VDDP	CHGR_VDDP - @mlb_noldo_lib.MLB_NOLDO	66C5
CHGR_VREF	CHGR_VREF - @mlb_noldo_lib.MLB_NOLDO	66B6
CK410_CLK14P3M_TIMER	CK410_CLK14P3M_TIMER - @mlb_noldo_lib.MLB_NOLDO	32A4 33B8
CK410_CPU0_N	CK410_CPU0_N - @mlb_noldo_lib.MLB_NOLDO	5C7 32C4 33D5
CK410_CPU0_P	CK410_CPU0_P - @mlb_noldo_lib.MLB_NOLDO	5C7 32C4 33D5
CK410_CPU1_N	CK410_CPU1_N - @mlb_noldo_lib.MLB_NOLDO	5C7 32C4 33D5
CK410_CPU1_P	CK410_CPU1_P - @mlb_noldo_lib.MLB_NOLDO	5C7 32C4 33D5
CK410_CPU2_ITP_SRC10_N	CK410_CPU2_ITP_SRC10_N - @mlb_noldo_lib.MLB_NOLDO	5C7 32C4 33D5
CK410_CPU2_ITP_SRC10_P	CK410_CPU2_ITP_SRC10_P - @mlb_noldo_lib.MLB_NOLDO	5C7 32C4 33D5
CK410_DOT96_27M_N	CK410_DOT96_27M_N - @mlb_noldo_lib.MLB_NOLDO	5C7 32A4 33B5
CK410_DOT96_27M_P	CK410_DOT96_27M_P - @mlb_noldo_lib.MLB_NOLDO	5C7 32A4 33B5
CK410_FSB_TEST_MODE	CK410_FSB_TEST_MODE - @mlb_noldo_lib.MLB_NOLDO	32C6 33B8
CK410_IREF	CK410_IREF - @mlb_noldo_lib.MLB_NOLDO	32B6
CK410_LVDS_N	CK410_LVDS_N - @mlb_noldo_lib.MLB_NOLDO	5C7 32B4 33A5
CK410_LVDS_P	CK410_LVDS_P - @mlb_noldo_lib.MLB_NOLDO	5C7 32B4 33A5
CK410_PCI1_CLK	CK410_PCI1_CLK - @mlb_noldo_lib.MLB_NOLDO	32B6 33D8
CK410_PCI2_CLK	CK410_PCI2_CLK - @mlb_noldo_lib.MLB_NOLDO	32B6 33D8
CK410_PCI3_CLK	CK410_PCI3_CLK - @mlb_noldo_lib.MLB_NOLDO	32B6 33D8
CK410_PCI4_CLK	CK410_PCI4_CLK - @mlb_noldo_lib.MLB_NOLDO	32B6
CK410_PCI4_CLK_SPN	CK410_PCI4_CLK_SPN - @mlb_noldo_lib.MLB_NOLDO	5C7
CK410_PCI5_FCTSEL1	CK410_PCI5_FCTSEL1 - @mlb_noldo_lib.MLB_NOLDO	32B6 33A8
CK410_PCIF0_CLK	CK410_PCIF0_CLK - @mlb_noldo_lib.MLB_NOLDO	32B7 33D8
CK410_PCIF1_CLK	CK410_PCIF1_CLK - @mlb_noldo_lib.MLB_NOLDO	5C7 32B6 33D8
CK410_PD_VTT_PWRGD_L	CK410_PD_VTT_PWRGD_L - @mlb_noldo_lib.MLB_NOLDO	26A8 32A4
	VR_PWRGD_CK410_L - @mlb_noldo_lib.MLB_NOLDO	26A7 58C7
CK410_REF1_FCTSEL0	CK410_REF1_FCTSEL0 - @mlb_noldo_lib.MLB_NOLDO	32A4 33A8
CK410_SRC1_N	CK410_SRC1_N - @mlb_noldo_lib.MLB_NOLDO	6B4 32B4
	CK410_SRC1_N_SPN - @mlb_noldo_lib.MLB_NOLDO	5C7 6B3
CK410_SRC1_P	CK410_SRC1_P - @mlb_noldo_lib.MLB_NOLDO	6B4 32B4
	CK410_SRC1_P_SPN - @mlb_noldo_lib.MLB_NOLDO	5C7 6B3
CK410_SRC2_N	CK410_SRC2_N - @mlb_noldo_lib.MLB_NOLDO	5C7 32B4 33C5
CK410_SRC2_P	CK410_SRC2_P - @mlb_noldo_lib.MLB_NOLDO	5C7 32B4 33C5
CK410_SRC3_N	CK410_SRC3_N - @mlb_noldo_lib.MLB_NOLDO	6B4 32B4
	CK410_SRC3_N_SPN - @mlb_noldo_lib.MLB_NOLDO	5C7 6B3
CK410_SRC3_P	CK410_SRC3_P - @mlb_noldo_lib.MLB_NOLDO	6B4 32B4
	CK410_SRC3_P_SPN - @mlb_noldo_lib.MLB_NOLDO	5C7 6B3
CK410_SRC4_N	CK410_SRC4_N - @mlb_noldo_lib.MLB_NOLDO	5C7 32B4 33B5
CK410_SRC4_P	CK410_SRC4_P - @mlb_noldo_lib.MLB_NOLDO	5C7 32B4 33B5
CK410_SRC5_N	CK410_SRC5_N - @mlb_noldo_lib.MLB_NOLDO	5C7 32B4 33C5
CK410_SRC5_P	CK410_SRC5_P - @mlb_noldo_lib.MLB_NOLDO	5C7 32B4 33C5
CK410_SRC6_N	CK410_SRC6_N - @mlb_noldo_lib.MLB_NOLDO	5C7 32B4 33C5
CK410_SRC6_P	CK410_SRC6_P - @mlb_noldo_lib.MLB_NOLDO	5C7 32B4 33D5
CK410_SRC7_N	CK410_SRC7_N - @mlb_noldo_lib.MLB_NOLDO	6B4 32B4
	CK410_SRC7_N_SPN - @mlb_noldo_lib.MLB_NOLDO	5C7 6B3
CK410_SRC7_P	CK410_SRC7_P - @mlb_noldo_lib.MLB_NOLDO	6B4 32B4
	CK410_SRC7_P_SPN - @mlb_noldo_lib.MLB_NOLDO	5C7 6B3
CK410_SRC8_N	CK410_SRC8_N - @mlb_noldo_lib.MLB_NOLDO	5B7 32A4 33C5
CK410_SRC8_P	CK410_SRC8_P - @mlb_noldo_lib.MLB_NOLDO	5B7 32A4 33C5
CK410_SRC_CLKREQ1_L	CK410_SRC_CLKREQ1_L - @mlb_noldo_lib.MLB_NOLDO	6B4 32B4
	CK410_SRC_CLKREQ1_L_SPN - @mlb_noldo_lib.MLB_NOLDO	5B7 6B3
CK410_SRC_CLKREQ3_L	CK410_SRC_CLKREQ3_L - @mlb_noldo_lib.MLB_NOLDO	6B4 32B4
	CK410_SRC_CLKREQ3_L_SPN - @mlb_noldo_lib.MLB_NOLDO	5B7 6B3
CK410_SRC_CLKREQ6_L	CK410_SRC_CLKREQ6_L - @mlb_noldo_lib.MLB_NOLDO	32B4 43C6
CK410_SRC_CLKREQ8_L	CK410_SRC_CLKREQ8_L - @mlb_noldo_lib.MLB_NOLDO	5B7 32A4 33A5
CK410_USB48_FSA	CK410_USB48_FSA - @mlb_noldo_lib.MLB_NOLDO	32A4 33C8
CK410_XTAL_IN	CK410_XTAL_IN - @mlb_noldo_lib.MLB_NOLDO	32C6
CK410_XTAL_OUT	CK410_XTAL_OUT -	32C6

	@mlb_noldo_lib.MLB_NOLDO	
CLK_NB_OE_L	CLK_NB_OE_L - @mlb_noldo_lib.MLB_NOLDO	14B6 32B4
CONN_GEYSER_ONOFF_FL	CONN_GEYSER_ONOFF_FLTR_L -	40C6
TR_L	@mlb_noldo_lib.MLB_NOLDO	
CONN_GEYSER_USB_N	CONN_GEYSER_USB_N - @mlb_noldo_lib.MLB_NOLDO	40C6
CONN_GEYSER_USB_P	CONN_GEYSER_USB_P - @mlb_noldo_lib.MLB_NOLDO	40C6
CPUVCORE_ISENSE_CAL	CPUVCORE_ISENSE_CAL - @mlb_noldo_lib.MLB_NOLDO	48A5
CPU_A20M_L	CPU_A20M_L - @mlb_noldo_lib.MLB_NOLDO	7C8 21C4
CPU_BSEL<0>	CPU_BSEL<0> - @mlb_noldo_lib.MLB_NOLDO	7B4 33C6
CPU_BSEL<1>	CPU_BSEL<1> - @mlb_noldo_lib.MLB_NOLDO	7B4 33B6
CPU_BSEL<2>	CPU_BSEL<2> - @mlb_noldo_lib.MLB_NOLDO	7B4 33B6
CPU_BSEL_R<0>	CPU_BSEL_R<0> - @mlb_noldo_lib.MLB_NOLDO	33C7
CPU_BSEL_R<1>	CPU_BSEL_R<1> - @mlb_noldo_lib.MLB_NOLDO	33B7
CPU_BSEL_R<2>	CPU_BSEL_R<2> - @mlb_noldo_lib.MLB_NOLDO	33B7
CPU_COMP<0>	CPU_COMP<0> - @mlb_noldo_lib.MLB_NOLDO	7B3
CPU_COMP<1>	CPU_COMP<1> - @mlb_noldo_lib.MLB_NOLDO	7B3
CPU_COMP<2>	CPU_COMP<2> - @mlb_noldo_lib.MLB_NOLDO	7B3
CPU_COMP<3>	CPU_COMP<3> - @mlb_noldo_lib.MLB_NOLDO	7B3
CPU_DPRSTP_L	CPU_DPRSTP_L - @mlb_noldo_lib.MLB_NOLDO	7B3 21C4 58C7
CPU_DPSLP_L	CPU_DPSLP_L - @mlb_noldo_lib.MLB_NOLDO	7B3 21C4
CPU_FERR_L	CPU_FERR_L - @mlb_noldo_lib.MLB_NOLDO	7C8 21C2
CPU_GTLREF	CPU_GTLREF - @mlb_noldo_lib.MLB_NOLDO	7B4
CPU_IGNNE_L	CPU_IGNNE_L - @mlb_noldo_lib.MLB_NOLDO	7C8 21C4
CPU_INIT_L	CPU_INIT_L - @mlb_noldo_lib.MLB_NOLDO	7D6 21C4
CPU_INTR	CPU_INTR - @mlb_noldo_lib.MLB_NOLDO	7C8 21C4
CPU_ISENSE_OUT_R	CPU_ISENSE_OUT_R - @mlb_noldo_lib.MLB_NOLDO	48C3
CPU_ISENSE_R_N	CPU_ISENSE_R_N - @mlb_noldo_lib.MLB_NOLDO	48C3
CPU_ISENSE_R_P	CPU_ISENSE_R_P - @mlb_noldo_lib.MLB_NOLDO	48C3
CPU_NMI	CPU_NMI - @mlb_noldo_lib.MLB_NOLDO	7C8 21C4
CPU_PROCHOT_L	CPU_PROCHOT_L - @mlb_noldo_lib.MLB_NOLDO	7C6 46B5 46C2 58C8
CPU_PSI_L	CPU_PSI_L - @mlb_noldo_lib.MLB_NOLDO	7A3 58C7
CPU_PWRGD	CPU_PWRGD - @mlb_noldo_lib.MLB_NOLDO	7B3 21C4
CPU_RCIN_L	CPU_RCIN_L - @mlb_noldo_lib.MLB_NOLDO	21C4
CPU_SMI_L	CPU_SMI_L - @mlb_noldo_lib.MLB_NOLDO	7C8 21C4
CPU_STPCLK_L	CPU_STPCLK_L - @mlb_noldo_lib.MLB_NOLDO	7C8 21C4
CPU_TEST1	CPU_TEST1 - @mlb_noldo_lib.MLB_NOLDO	7B4
CPU_TEST2	CPU_TEST2 - @mlb_noldo_lib.MLB_NOLDO	7B4
CPU_THERMAL_SCREW_DO	CPU_THERMAL_SCREW_DOWN -	6A8
WN	@mlb_noldo_lib.MLB_NOLDO	
CPU_THERMAL_SCREW_RI	CPU_THERMAL_SCREW_RIGHT -	6A7
GHT	@mlb_noldo_lib.MLB_NOLDO	
CPU_THERMAL_SCREW_UP	CPU_THERMAL_SCREW_UP - @mlb_noldo_lib.MLB_NOLDO	6A7
CPU_THERMD_N	CPU_THERMD_N - @mlb_noldo_lib.MLB_NOLDO	7C6 10B6
CPU_THERMD_P	CPU_THERMD_P - @mlb_noldo_lib.MLB_NOLDO	7C6 10B6
CPU_THERMTRIP_R	CPU_THERMTRIP_R - @mlb_noldo_lib.MLB_NOLDO	21C2
CPU_VCCSENSE_N	CPU_VCCSENSE_N - @mlb_noldo_lib.MLB_NOLDO	8B6 58A4 58A5
CPU_VCCSENSE_P	CPU_VCCSENSE_P - @mlb_noldo_lib.MLB_NOLDO	8B6 58A4 58A5
CPU_VID<0>	CPU_VID<0> - @mlb_noldo_lib.MLB_NOLDO	8B7 9C3
CPU_VID<1>	CPU_VID<1> - @mlb_noldo_lib.MLB_NOLDO	8B7 9C3
CPU_VID<2>	CPU_VID<2> - @mlb_noldo_lib.MLB_NOLDO	8B7 9C3
CPU_VID<3>	CPU_VID<3> - @mlb_noldo_lib.MLB_NOLDO	8B7 9C3
CPU_VID<4>	CPU_VID<4> - @mlb_noldo_lib.MLB_NOLDO	8B7 9C3
CPU_VID<5>	CPU_VID<5> - @mlb_noldo_lib.MLB_NOLDO	8B7 9D3
CPU_VID<6>	CPU_VID<6> - @mlb_noldo_lib.MLB_NOLDO	8B7 9D3
CPU_VID_R<0>	CPU_VID_R<0> - @mlb_noldo_lib.MLB_NOLDO	9C2 58C7
CPU_VID_R<0..6>	CPU_VID_R<0..6> - @mlb_noldo_lib.MLB_NOLDO	58A4
CPU_VID_R<1>	CPU_VID_R<1> - @mlb_noldo_lib.MLB_NOLDO	9C2 58C7
CPU_VID_R<2>	CPU_VID_R<2> - @mlb_noldo_lib.MLB_NOLDO	9C2 58C7
CPU_VID_R<3>	CPU_VID_R<3> - @mlb_noldo_lib.MLB_NOLDO	9C2 58C7
CPU_VID_R<4>	CPU_VID_R<4> - @mlb_noldo_lib.MLB_NOLDO	9C2 58C7
CPU_VID_R<5>	CPU_VID_R<5> - @mlb_noldo_lib.MLB_NOLDO	9D2 58C7
CPU_VID_R<6>	CPU_VID_R<6> - @mlb_noldo_lib.MLB_NOLDO	9D2 58C7
CPU_XDP_CLK_N	CPU_XDP_CLK_N - @mlb_noldo_lib.MLB_NOLDO	11B3 33D2 33D3
CPU_XDP_CLK_P	CPU_XDP_CLK_P - @mlb_noldo_lib.MLB_NOLDO	11B3 33D2 33D3
CRB_SV_DET	CRB_SV_DET - @mlb_noldo_lib.MLB_NOLDO	23B6 23C3
CRT_BLUE	CRT_BLUE - @mlb_noldo_lib.MLB_NOLDO	13B5 69B8
CRT_DDC_CLK	CRT_DDC_CLK - @mlb_noldo_lib.MLB_NOLDO	13B5 69D7

CRT_DDC_DATA	CRT_DDC_DATA - @mlb_noldo_lib.MLB_NOLDO	13B5 69D7
CRT_GREEN	CRT_GREEN - @mlb_noldo_lib.MLB_NOLDO	13B5 69A8
CRT_HSYNC_LS	CRT_HSYNC_LS - @mlb_noldo_lib.MLB_NOLDO	69C2
CRT_HSYNC_LS_R	CRT_HSYNC_LS_R - @mlb_noldo_lib.MLB_NOLDO	69C3
CRT_HSYNC_R	CRT_HSYNC_R - @mlb_noldo_lib.MLB_NOLDO	13B5 69C3
CRT_IREF	CRT_IREF - @mlb_noldo_lib.MLB_NOLDO	13B5 69C8
CRT_RED	CRT_RED - @mlb_noldo_lib.MLB_NOLDO	13B5 69A8
CRT_VSYNC_LS	CRT_VSYNC_LS - @mlb_noldo_lib.MLB_NOLDO	69C2
CRT_VSYNC_LS_R	CRT_VSYNC_LS_R - @mlb_noldo_lib.MLB_NOLDO	69C3
CRT_VSYNC_R	CRT_VSYNC_R - @mlb_noldo_lib.MLB_NOLDO	13B5 69C3
DCIN_ISENSE	DCIN_ISENSE - @mlb_noldo_lib.MLB_NOLDO	66C3
DEBUG_RST_L	DEBUG_RST_L - @mlb_noldo_lib.MLB_NOLDO	5C2 26B1 47C6
DMI_IRCOMP_R	DMI_IRCOMP_R - @mlb_noldo_lib.MLB_NOLDO	22C2
DMI_N2S_N<0>	DMI_N2S_N<0> - @mlb_noldo_lib.MLB_NOLDO	14B4 22D2
DMI_N2S_N<1>	DMI_N2S_N<1> - @mlb_noldo_lib.MLB_NOLDO	14B4 22D2
DMI_N2S_N<2>	DMI_N2S_N<2> - @mlb_noldo_lib.MLB_NOLDO	14B4 22D2
DMI_N2S_N<3>	DMI_N2S_N<3> - @mlb_noldo_lib.MLB_NOLDO	14B4 22D2
DMI_N2S_P<0>	DMI_N2S_P<0> - @mlb_noldo_lib.MLB_NOLDO	14B4 22D2
DMI_N2S_P<1>	DMI_N2S_P<1> - @mlb_noldo_lib.MLB_NOLDO	14B4 22D2
DMI_N2S_P<2>	DMI_N2S_P<2> - @mlb_noldo_lib.MLB_NOLDO	14B4 22D2
DMI_N2S_P<3>	DMI_N2S_P<3> - @mlb_noldo_lib.MLB_NOLDO	14B4 22D2
DMI_S2N_N<0>	DMI_S2N_N<0> - @mlb_noldo_lib.MLB_NOLDO	14B4 22D2
DMI_S2N_N<1>	DMI_S2N_N<1> - @mlb_noldo_lib.MLB_NOLDO	14B4 22D2
DMI_S2N_N<2>	DMI_S2N_N<2> - @mlb_noldo_lib.MLB_NOLDO	14B4 22D2
DMI_S2N_N<3>	DMI_S2N_N<3> - @mlb_noldo_lib.MLB_NOLDO	14B4 22D2
DMI_S2N_P<0>	DMI_S2N_P<0> - @mlb_noldo_lib.MLB_NOLDO	14B4 22D2
DMI_S2N_P<1>	DMI_S2N_P<1> - @mlb_noldo_lib.MLB_NOLDO	14B4 22D2
DMI_S2N_P<2>	DMI_S2N_P<2> - @mlb_noldo_lib.MLB_NOLDO	14B4 22D2
DMI_S2N_P<3>	DMI_S2N_P<3> - @mlb_noldo_lib.MLB_NOLDO	14B4 22D2
ENETPWR_EN	ENETPWR_EN - @mlb_noldo_lib.MLB_NOLDO	60B5 60C5 60D4
ENET_BOB_SMITH_CAP	ENET_BOB_SMITH_CAP - @mlb_noldo_lib.MLB_NOLDO	37A5
ENET_CENTER_TAP<0>	ENET_CENTER_TAP<0> - @mlb_noldo_lib.MLB_NOLDO	37C6
ENET_CENTER_TAP<1>	ENET_CENTER_TAP<1> - @mlb_noldo_lib.MLB_NOLDO	37B6
ENET_CENTER_TAP<2>	ENET_CENTER_TAP<2> - @mlb_noldo_lib.MLB_NOLDO	37B6
ENET_CENTER_TAP<3>	ENET_CENTER_TAP<3> - @mlb_noldo_lib.MLB_NOLDO	37B6
ENET_CLK100M_PCIE_N	ENET_CLK100M_PCIE_N - @mlb_noldo_lib.MLB_NOLDO	33C3 33D2 36C6
ENET_CLK100M_PCIE_P	ENET_CLK100M_PCIE_P - @mlb_noldo_lib.MLB_NOLDO	33C3 33D2 36C6
ENET_CTRL12	ENET_CTRL12 - @mlb_noldo_lib.MLB_NOLDO	6A4 36C8
	ENET_CTRL12_SPN - @mlb_noldo_lib.MLB_NOLDO	6A3
ENET_CTRL25	ENET_CTRL25 - @mlb_noldo_lib.MLB_NOLDO	6A4 36C8
	ENET_CTRL25_SPN - @mlb_noldo_lib.MLB_NOLDO	6A3
ENET_LOM_DIS_L	ENET_LOM_DIS_L - @mlb_noldo_lib.MLB_NOLDO	36D8
ENET_MDI0	ENET_MDI0 - @mlb_noldo_lib.MLB_NOLDO	36B5
ENET_MDI1	ENET_MDI1 - @mlb_noldo_lib.MLB_NOLDO	36B4
ENET_MDI2	ENET_MDI2 - @mlb_noldo_lib.MLB_NOLDO	36B4
ENET_MDI3	ENET_MDI3 - @mlb_noldo_lib.MLB_NOLDO	36B3
ENET_MDI_N<0>	ENET_MDI_N<0> - @mlb_noldo_lib.MLB_NOLDO	36C3 37C8
ENET_MDI_N<1>	ENET_MDI_N<1> - @mlb_noldo_lib.MLB_NOLDO	36C3 37B8
ENET_MDI_N<2>	ENET_MDI_N<2> - @mlb_noldo_lib.MLB_NOLDO	36C3 37B8
ENET_MDI_N<3>	ENET_MDI_N<3> - @mlb_noldo_lib.MLB_NOLDO	36C3 37B8
ENET_MDI_P<0>	ENET_MDI_P<0> - @mlb_noldo_lib.MLB_NOLDO	36C3 37C8
ENET_MDI_P<1>	ENET_MDI_P<1> - @mlb_noldo_lib.MLB_NOLDO	36C3 37B8
ENET_MDI_P<2>	ENET_MDI_P<2> - @mlb_noldo_lib.MLB_NOLDO	36C3 37B8
ENET_MDI_P<3>	ENET_MDI_P<3> - @mlb_noldo_lib.MLB_NOLDO	36C3 37B8
ENET_MDI_TRAN_N<0>	ENET_MDI_TRAN_N<0> - @mlb_noldo_lib.MLB_NOLDO	37C5
ENET_MDI_TRAN_N<1>	ENET_MDI_TRAN_N<1> - @mlb_noldo_lib.MLB_NOLDO	37B5
ENET_MDI_TRAN_N<2>	ENET_MDI_TRAN_N<2> - @mlb_noldo_lib.MLB_NOLDO	5A7 37B5
ENET_MDI_TRAN_N<3>	ENET_MDI_TRAN_N<3> - @mlb_noldo_lib.MLB_NOLDO	37B5
ENET_MDI_TRAN_P<0>	ENET_MDI_TRAN_P<0> - @mlb_noldo_lib.MLB_NOLDO	37C5
ENET_MDI_TRAN_P<1>	ENET_MDI_TRAN_P<1> - @mlb_noldo_lib.MLB_NOLDO	37B5
ENET_MDI_TRAN_P<2>	ENET_MDI_TRAN_P<2> - @mlb_noldo_lib.MLB_NOLDO	5A7 37B5
ENET_MDI_TRAN_P<3>	ENET_MDI_TRAN_P<3> - @mlb_noldo_lib.MLB_NOLDO	5A7 37B5
ENET_PU_VDD_TTL0	ENET_PU_VDD_TTL0 - @mlb_noldo_lib.MLB_NOLDO	36A6 36C6

ENET_PU_VDD_TTL1	ENET_PU_VDD_TTL1 - @mlb_noldo_lib.MLB_NOLDO	36A6 36B6
ENET_RSET	ENET_RSET - @mlb_noldo_lib.MLB_NOLDO	36C8
ENET_RST_L	ENET_RST_L - @mlb_noldo_lib.MLB_NOLDO	26A1 36C6
ENET_VPD_CLK	ENET_VPD_CLK - @mlb_noldo_lib.MLB_NOLDO	36A2 36C6
ENET_VPD_DATA	ENET_VPD_DATA - @mlb_noldo_lib.MLB_NOLDO	36A2 36C6
ENET_XTALI	ENET_XTALI - @mlb_noldo_lib.MLB_NOLDO	36B6
ENET_XTALO	ENET_XTALO - @mlb_noldo_lib.MLB_NOLDO	36B6
EXTAUSB_OC_F_L	EXTAUSB_OC_F_L - @mlb_noldo_lib.MLB_NOLDO	42C8
EXTBUSB_OC_F_L	EXTBUSB_OC_F_L - @mlb_noldo_lib.MLB_NOLDO	42C8
EXT_COMPVID_B	EXT_COMPVID_B - @mlb_noldo_lib.MLB_NOLDO	69B6
EXT_C_R	EXT_C_R - @mlb_noldo_lib.MLB_NOLDO	69A6
EXT_Y_G	EXT_Y_G - @mlb_noldo_lib.MLB_NOLDO	69A6
FAN_RT_PWM	FAN_RT_PWM - @mlb_noldo_lib.MLB_NOLDO	5D2 51B3
FAN_RT_TACH	FAN_RT_TACH - @mlb_noldo_lib.MLB_NOLDO	5D2 51C3
FSB_ADSTB_L<0>	FSB_ADSTB_L<0> - @mlb_noldo_lib.MLB_NOLDO	7D8 12C4
FSB_ADSTB_L<1>	FSB_ADSTB_L<1> - @mlb_noldo_lib.MLB_NOLDO	7C8 12C4
FSB_ADS_L	FSB_ADS_L - @mlb_noldo_lib.MLB_NOLDO	7D6 12C4
FSB_A_L<3>	FSB_A_L<3> - @mlb_noldo_lib.MLB_NOLDO	7D8 12D4
FSB_A_L<4>	FSB_A_L<4> - @mlb_noldo_lib.MLB_NOLDO	7D8 12D4
FSB_A_L<5>	FSB_A_L<5> - @mlb_noldo_lib.MLB_NOLDO	7D8 12D4
FSB_A_L<6>	FSB_A_L<6> - @mlb_noldo_lib.MLB_NOLDO	7D8 12D4
FSB_A_L<7>	FSB_A_L<7> - @mlb_noldo_lib.MLB_NOLDO	7D8 12D4
FSB_A_L<8>	FSB_A_L<8> - @mlb_noldo_lib.MLB_NOLDO	7D8 12D4
FSB_A_L<9>	FSB_A_L<9> - @mlb_noldo_lib.MLB_NOLDO	7D8 12D4
FSB_A_L<10>	FSB_A_L<10> - @mlb_noldo_lib.MLB_NOLDO	7D8 12D4
FSB_A_L<11>	FSB_A_L<11> - @mlb_noldo_lib.MLB_NOLDO	7D8 12D4
FSB_A_L<12>	FSB_A_L<12> - @mlb_noldo_lib.MLB_NOLDO	7D8 12D4
FSB_A_L<13>	FSB_A_L<13> - @mlb_noldo_lib.MLB_NOLDO	7D8 12D4
FSB_A_L<14>	FSB_A_L<14> - @mlb_noldo_lib.MLB_NOLDO	7D8 12D4
FSB_A_L<15>	FSB_A_L<15> - @mlb_noldo_lib.MLB_NOLDO	7D8 12D4
FSB_A_L<16>	FSB_A_L<16> - @mlb_noldo_lib.MLB_NOLDO	7D8 12C4
FSB_A_L<17>	FSB_A_L<17> - @mlb_noldo_lib.MLB_NOLDO	7C8 12C4
FSB_A_L<18>	FSB_A_L<18> - @mlb_noldo_lib.MLB_NOLDO	7C8 12C4
FSB_A_L<19>	FSB_A_L<19> - @mlb_noldo_lib.MLB_NOLDO	7C8 12C4
FSB_A_L<20>	FSB_A_L<20> - @mlb_noldo_lib.MLB_NOLDO	7C8 12C4
FSB_A_L<21>	FSB_A_L<21> - @mlb_noldo_lib.MLB_NOLDO	7C8 12C4
FSB_A_L<22>	FSB_A_L<22> - @mlb_noldo_lib.MLB_NOLDO	7C8 12C4
FSB_A_L<23>	FSB_A_L<23> - @mlb_noldo_lib.MLB_NOLDO	7C8 12C4
FSB_A_L<24>	FSB_A_L<24> - @mlb_noldo_lib.MLB_NOLDO	7C8 12C4
FSB_A_L<25>	FSB_A_L<25> - @mlb_noldo_lib.MLB_NOLDO	7C8 12C4
FSB_A_L<26>	FSB_A_L<26> - @mlb_noldo_lib.MLB_NOLDO	7C8 12C4
FSB_A_L<27>	FSB_A_L<27> - @mlb_noldo_lib.MLB_NOLDO	7C8 12C4
FSB_A_L<28>	FSB_A_L<28> - @mlb_noldo_lib.MLB_NOLDO	7C8 12C4
FSB_A_L<29>	FSB_A_L<29> - @mlb_noldo_lib.MLB_NOLDO	7C8 12C4
FSB_A_L<30>	FSB_A_L<30> - @mlb_noldo_lib.MLB_NOLDO	7C8 12C4
FSB_A_L<31>	FSB_A_L<31> - @mlb_noldo_lib.MLB_NOLDO	7C8 12C4
FSB_BNR_L	FSB_BNR_L - @mlb_noldo_lib.MLB_NOLDO	7D6 12C4
FSB_BPRI_L	FSB_BPRI_L - @mlb_noldo_lib.MLB_NOLDO	7D6 12C4
FSB_BREQ0_L	FSB_BREQ0_L - @mlb_noldo_lib.MLB_NOLDO	7D6 12C4
FSB_CLK_CPU_N	FSB_CLK_CPU_N - @mlb_noldo_lib.MLB_NOLDO	7C6 33C2 33D3
FSB_CLK_CPU_P	FSB_CLK_CPU_P - @mlb_noldo_lib.MLB_NOLDO	7C6 33C2 33D3
FSB_CLK_NB_N	FSB_CLK_NB_N - @mlb_noldo_lib.MLB_NOLDO	12A6 33C2 33D3
FSB_CLK_NB_P	FSB_CLK_NB_P - @mlb_noldo_lib.MLB_NOLDO	12A6 33D2 33D3
FSB_CPURST_L	FSB_CPURST_L - @mlb_noldo_lib.MLB_NOLDO	7D6 11B5 12C4
FSB_DBSY_L	FSB_DBSY_L - @mlb_noldo_lib.MLB_NOLDO	7D6 12B4
FSB_DEFER_L	FSB_DEFER_L - @mlb_noldo_lib.MLB_NOLDO	7D6 12B4
FSB_DINV_L<0>	FSB_DINV_L<0> - @mlb_noldo_lib.MLB_NOLDO	7C4 12B4
FSB_DINV_L<1>	FSB_DINV_L<1> - @mlb_noldo_lib.MLB_NOLDO	7B4 12B4
FSB_DINV_L<2>	FSB_DINV_L<2> - @mlb_noldo_lib.MLB_NOLDO	7C3 12B4
FSB_DINV_L<3>	FSB_DINV_L<3> - @mlb_noldo_lib.MLB_NOLDO	7B3 12B4
FSB_DPWR_L	FSB_DPWR_L - @mlb_noldo_lib.MLB_NOLDO	7B3 12B4
FSB_DRDY_L	FSB_DRDY_L - @mlb_noldo_lib.MLB_NOLDO	7D6 12B4
FSB_DSTBN_L<0>	FSB_DSTBN_L<0> - @mlb_noldo_lib.MLB_NOLDO	7C4 12B4

FSB_DSTBN_L<1>	FSB_DSTBN_L<1> - @mlb_noldo_lib.MLB_NOLDO	7B4 12B4
FSB_DSTBN_L<2>	FSB_DSTBN_L<2> - @mlb_noldo_lib.MLB_NOLDO	7C3 12B4
FSB_DSTBN_L<3>	FSB_DSTBN_L<3> - @mlb_noldo_lib.MLB_NOLDO	7B3 12B4
FSB_DSTBP_L<0>	FSB_DSTBP_L<0> - @mlb_noldo_lib.MLB_NOLDO	7C4 12B4
FSB_DSTBP_L<1>	FSB_DSTBP_L<1> - @mlb_noldo_lib.MLB_NOLDO	7B4 12B4
FSB_DSTBP_L<2>	FSB_DSTBP_L<2> - @mlb_noldo_lib.MLB_NOLDO	7C3 12B4
FSB_DSTBP_L<3>	FSB_DSTBP_L<3> - @mlb_noldo_lib.MLB_NOLDO	7B3 12B4
FSB_D_L<0>	FSB_D_L<0> - @mlb_noldo_lib.MLB_NOLDO	7C4 12D6
FSB_D_L<1>	FSB_D_L<1> - @mlb_noldo_lib.MLB_NOLDO	7C4 12D6
FSB_D_L<2>	FSB_D_L<2> - @mlb_noldo_lib.MLB_NOLDO	7C4 12D6
FSB_D_L<3>	FSB_D_L<3> - @mlb_noldo_lib.MLB_NOLDO	7C4 12D6
FSB_D_L<4>	FSB_D_L<4> - @mlb_noldo_lib.MLB_NOLDO	7C4 12D6
FSB_D_L<5>	FSB_D_L<5> - @mlb_noldo_lib.MLB_NOLDO	7C4 12D6
FSB_D_L<6>	FSB_D_L<6> - @mlb_noldo_lib.MLB_NOLDO	7C4 12D6
FSB_D_L<7>	FSB_D_L<7> - @mlb_noldo_lib.MLB_NOLDO	7C4 12D6
FSB_D_L<8>	FSB_D_L<8> - @mlb_noldo_lib.MLB_NOLDO	7C4 12D6
FSB_D_L<9>	FSB_D_L<9> - @mlb_noldo_lib.MLB_NOLDO	7C4 12D6
FSB_D_L<10>	FSB_D_L<10> - @mlb_noldo_lib.MLB_NOLDO	7C4 12D6
FSB_D_L<11>	FSB_D_L<11> - @mlb_noldo_lib.MLB_NOLDO	7C4 12D6
FSB_D_L<12>	FSB_D_L<12> - @mlb_noldo_lib.MLB_NOLDO	7C4 12D6
FSB_D_L<13>	FSB_D_L<13> - @mlb_noldo_lib.MLB_NOLDO	7C4 12C6
FSB_D_L<14>	FSB_D_L<14> - @mlb_noldo_lib.MLB_NOLDO	7C4 12C6
FSB_D_L<15>	FSB_D_L<15> - @mlb_noldo_lib.MLB_NOLDO	7C4 12C6
FSB_D_L<16>	FSB_D_L<16> - @mlb_noldo_lib.MLB_NOLDO	7C4 12C6
FSB_D_L<17>	FSB_D_L<17> - @mlb_noldo_lib.MLB_NOLDO	7C4 12C6
FSB_D_L<18>	FSB_D_L<18> - @mlb_noldo_lib.MLB_NOLDO	7B4 12C6
FSB_D_L<19>	FSB_D_L<19> - @mlb_noldo_lib.MLB_NOLDO	7B4 12C6
FSB_D_L<20>	FSB_D_L<20> - @mlb_noldo_lib.MLB_NOLDO	7B4 12C6
FSB_D_L<21>	FSB_D_L<21> - @mlb_noldo_lib.MLB_NOLDO	7B4 12C6
FSB_D_L<22>	FSB_D_L<22> - @mlb_noldo_lib.MLB_NOLDO	7B4 12C6
FSB_D_L<23>	FSB_D_L<23> - @mlb_noldo_lib.MLB_NOLDO	7B4 12C6
FSB_D_L<24>	FSB_D_L<24> - @mlb_noldo_lib.MLB_NOLDO	7B4 12C6
FSB_D_L<25>	FSB_D_L<25> - @mlb_noldo_lib.MLB_NOLDO	7B4 12C6
FSB_D_L<26>	FSB_D_L<26> - @mlb_noldo_lib.MLB_NOLDO	7B4 12C6
FSB_D_L<27>	FSB_D_L<27> - @mlb_noldo_lib.MLB_NOLDO	7B4 12C6
FSB_D_L<28>	FSB_D_L<28> - @mlb_noldo_lib.MLB_NOLDO	7B4 12C6
FSB_D_L<29>	FSB_D_L<29> - @mlb_noldo_lib.MLB_NOLDO	7B4 12C6
FSB_D_L<30>	FSB_D_L<30> - @mlb_noldo_lib.MLB_NOLDO	7B4 12C6
FSB_D_L<31>	FSB_D_L<31> - @mlb_noldo_lib.MLB_NOLDO	7B4 12C6
FSB_D_L<32>	FSB_D_L<32> - @mlb_noldo_lib.MLB_NOLDO	7C3 12C6
FSB_D_L<33>	FSB_D_L<33> - @mlb_noldo_lib.MLB_NOLDO	7C3 12C6
FSB_D_L<34>	FSB_D_L<34> - @mlb_noldo_lib.MLB_NOLDO	7C3 12C6
FSB_D_L<35>	FSB_D_L<35> - @mlb_noldo_lib.MLB_NOLDO	7C3 12C6
FSB_D_L<36>	FSB_D_L<36> - @mlb_noldo_lib.MLB_NOLDO	7C3 12C6
FSB_D_L<37>	FSB_D_L<37> - @mlb_noldo_lib.MLB_NOLDO	7C3 12C6
FSB_D_L<38>	FSB_D_L<38> - @mlb_noldo_lib.MLB_NOLDO	7C3 12C6
FSB_D_L<39>	FSB_D_L<39> - @mlb_noldo_lib.MLB_NOLDO	7C3 12B6
FSB_D_L<40>	FSB_D_L<40> - @mlb_noldo_lib.MLB_NOLDO	7C3 12B6
FSB_D_L<41>	FSB_D_L<41> - @mlb_noldo_lib.MLB_NOLDO	7C3 12B6
FSB_D_L<42>	FSB_D_L<42> - @mlb_noldo_lib.MLB_NOLDO	7C3 12B6
FSB_D_L<43>	FSB_D_L<43> - @mlb_noldo_lib.MLB_NOLDO	7C3 12B6
FSB_D_L<44>	FSB_D_L<44> - @mlb_noldo_lib.MLB_NOLDO	7C3 12B6
FSB_D_L<45>	FSB_D_L<45> - @mlb_noldo_lib.MLB_NOLDO	7C3 12B6
FSB_D_L<46>	FSB_D_L<46> - @mlb_noldo_lib.MLB_NOLDO	7C3 12B6
FSB_D_L<47>	FSB_D_L<47> - @mlb_noldo_lib.MLB_NOLDO	7C3 12B6
FSB_D_L<48>	FSB_D_L<48> - @mlb_noldo_lib.MLB_NOLDO	7C3 12B6
FSB_D_L<49>	FSB_D_L<49> - @mlb_noldo_lib.MLB_NOLDO	7C3 12B6
FSB_D_L<50>	FSB_D_L<50> - @mlb_noldo_lib.MLB_NOLDO	7B3 12B6
FSB_D_L<51>	FSB_D_L<51> - @mlb_noldo_lib.MLB_NOLDO	7B3 12B6
FSB_D_L<52>	FSB_D_L<52> - @mlb_noldo_lib.MLB_NOLDO	7B3 12B6
FSB_D_L<53>	FSB_D_L<53> - @mlb_noldo_lib.MLB_NOLDO	7B3 12B6
FSB_D_L<54>	FSB_D_L<54> - @mlb_noldo_lib.MLB_NOLDO	7B3 12B6

FSB_D_L<55>	FSB_D_L<55> - @mlb_noldo_lib.MLB_NOLDO	7B3 12B6
FSB_D_L<56>	FSB_D_L<56> - @mlb_noldo_lib.MLB_NOLDO	7B3 12B6
FSB_D_L<57>	FSB_D_L<57> - @mlb_noldo_lib.MLB_NOLDO	7B3 12B6
FSB_D_L<58>	FSB_D_L<58> - @mlb_noldo_lib.MLB_NOLDO	7B3 12B6
FSB_D_L<59>	FSB_D_L<59> - @mlb_noldo_lib.MLB_NOLDO	7B3 12B6
FSB_D_L<60>	FSB_D_L<60> - @mlb_noldo_lib.MLB_NOLDO	7B3 12B6
FSB_D_L<61>	FSB_D_L<61> - @mlb_noldo_lib.MLB_NOLDO	7B3 12B6
FSB_D_L<62>	FSB_D_L<62> - @mlb_noldo_lib.MLB_NOLDO	7B3 12B6
FSB_D_L<63>	FSB_D_L<63> - @mlb_noldo_lib.MLB_NOLDO	7B3 12B6
FSB_HITM_L	FSB_HITM_L - @mlb_noldo_lib.MLB_NOLDO	7D6 12B4
FSB_HIT_L	FSB_HIT_L - @mlb_noldo_lib.MLB_NOLDO	7D6 12B4
FSB_IERR_L	FSB_IERR_L - @mlb_noldo_lib.MLB_NOLDO	7D6
FSB_LOCK_L	FSB_LOCK_L - @mlb_noldo_lib.MLB_NOLDO	7D6 12B4
FSB_REQ_L<0>	FSB_REQ_L<0> - @mlb_noldo_lib.MLB_NOLDO	7D8 12B4
FSB_REQ_L<1>	FSB_REQ_L<1> - @mlb_noldo_lib.MLB_NOLDO	7D8 12B4
FSB_REQ_L<2>	FSB_REQ_L<2> - @mlb_noldo_lib.MLB_NOLDO	7D8 12A4
FSB_REQ_L<3>	FSB_REQ_L<3> - @mlb_noldo_lib.MLB_NOLDO	7D8 12A4
FSB_REQ_L<4>	FSB_REQ_L<4> - @mlb_noldo_lib.MLB_NOLDO	7D8 12A4
FSB_RS_L<0>	FSB_RS_L<0> - @mlb_noldo_lib.MLB_NOLDO	7D6 12A4
FSB_RS_L<1>	FSB_RS_L<1> - @mlb_noldo_lib.MLB_NOLDO	7D6 12A4
FSB_RS_L<2>	FSB_RS_L<2> - @mlb_noldo_lib.MLB_NOLDO	7D6 12A4
FSB_SLPCPU_L	FSB_SLPCPU_L - @mlb_noldo_lib.MLB_NOLDO	7A3 12A4
FSB_TRDY_L	FSB_TRDY_L - @mlb_noldo_lib.MLB_NOLDO	7D6 12A4
FWH_INIT_L	FWH_INIT_L - @mlb_noldo_lib.MLB_NOLDO	5C2 6B2 21C4 47C5
	SMC_CPU_INIT_3_3_L - @mlb_noldo_lib.MLB_NOLDO	6B1 45D5
FWH_MFG_MODE	FWH_MFG_MODE - @mlb_noldo_lib.MLB_NOLDO	23A6 23C5
FWPWR_ACIN	FWPWR_ACIN - @mlb_noldo_lib.MLB_NOLDO	39C6
FWPWR_EN	FWPWR_EN - @mlb_noldo_lib.MLB_NOLDO	39C5
FWPWR_EN_L	FWPWR_EN_L - @mlb_noldo_lib.MLB_NOLDO	39C4 60C8
FWPWR_EN_L_DIV	FWPWR_EN_L_DIV - @mlb_noldo_lib.MLB_NOLDO	39C5
FWPWR_EN_L_R	FWPWR_EN_L_R - @mlb_noldo_lib.MLB_NOLDO	60C7
FWPWR_RUN	FWPWR_RUN - @mlb_noldo_lib.MLB_NOLDO	39C6
FW_A_TPA_N	FW_A_TPA_N - @mlb_noldo_lib.MLB_NOLDO	38B3 39B6
	FW_PORT0_TPA_N - @mlb_noldo_lib.MLB_NOLDO	39B5
FW_A_TPA_P	FW_A_TPA_P - @mlb_noldo_lib.MLB_NOLDO	38B3 39B6
	FW_PORT0_TPA_P - @mlb_noldo_lib.MLB_NOLDO	39B5
FW_A_TPBIAS	FW_A_TPBIAS - @mlb_noldo_lib.MLB_NOLDO	38B3 39B6
FW_A_TPB_N	FW_A_TPB_N - @mlb_noldo_lib.MLB_NOLDO	38B3 39B6
	FW_PORT0_TPB_N - @mlb_noldo_lib.MLB_NOLDO	39B5
FW_A_TPB_P	FW_A_TPB_P - @mlb_noldo_lib.MLB_NOLDO	38B3 39B6
	FW_PORT0_TPB_P - @mlb_noldo_lib.MLB_NOLDO	39B5
FW_B_TPA_N	FW_B_TPA_N - @mlb_noldo_lib.MLB_NOLDO	6D2 38B3
	FW_B_TPA_N_SPN - @mlb_noldo_lib.MLB_NOLDO	5B7 6D1
FW_B_TPA_P	FW_B_TPA_P - @mlb_noldo_lib.MLB_NOLDO	6D2 38B3
	FW_B_TPA_P_SPN - @mlb_noldo_lib.MLB_NOLDO	5B7 6D1
FW_B_TPBIAS	FW_B_TPBIAS - @mlb_noldo_lib.MLB_NOLDO	6D2 38B3
	FW_B_TPBIAS_SPN - @mlb_noldo_lib.MLB_NOLDO	5B7 6D1
FW_B_TPB_N	FW_B_TPB_N - @mlb_noldo_lib.MLB_NOLDO	6D2 38B3
	FW_B_TPB_N_SPN - @mlb_noldo_lib.MLB_NOLDO	5B7 6D1
FW_B_TPB_P	FW_B_TPB_P - @mlb_noldo_lib.MLB_NOLDO	6D2 38B3
	FW_B_TPB_P_SPN - @mlb_noldo_lib.MLB_NOLDO	5B7 6D1
FW_C_TPA_N	FW_C_TPA_N - @mlb_noldo_lib.MLB_NOLDO	6D2 38B3
	FW_C_TPA_N_SPN - @mlb_noldo_lib.MLB_NOLDO	5B7 6D1
FW_C_TPA_P	FW_C_TPA_P - @mlb_noldo_lib.MLB_NOLDO	6D2 38B3
	FW_C_TPA_P_SPN - @mlb_noldo_lib.MLB_NOLDO	5B7 6D1
FW_C_TPBIAS	FW_C_TPBIAS - @mlb_noldo_lib.MLB_NOLDO	6D2 38B3
	FW_C_TPBIAS_SPN - @mlb_noldo_lib.MLB_NOLDO	5B7 6D1
FW_C_TPB_N	FW_C_TPB_N - @mlb_noldo_lib.MLB_NOLDO	6D2 38B3
	FW_C_TPB_N_SPN - @mlb_noldo_lib.MLB_NOLDO	5B7 6D1
FW_C_TPB_P	FW_C_TPB_P - @mlb_noldo_lib.MLB_NOLDO	6D2 38B3
	FW_C_TPB_P_SPN - @mlb_noldo_lib.MLB_NOLDO	5B7 6D1
FW_PCI_IDSEL	FW_PCI_IDSEL - @mlb_noldo_lib.MLB_NOLDO	38A5
FW_PCI_RST_L	FW_PCI_RST_L - @mlb_noldo_lib.MLB_NOLDO	38A5

	@mlb_noldo_lib.MLB_NOLDO	
FW_PORT0_TPA_N_FL	FW_PORT0_TPA_N_FL - @mlb_noldo_lib.MLB_NOLDO	39B2
FW_PORT0_TPA_P_FL	FW_PORT0_TPA_P_FL - @mlb_noldo_lib.MLB_NOLDO	39B2
FW_PORT0_TPB	FW_PORT0_TPB - @mlb_noldo_lib.MLB_NOLDO	39A5
FW_PORT0_TPB_N_FL	FW_PORT0_TPB_N_FL - @mlb_noldo_lib.MLB_NOLDO	39B2
FW_PORT0_TPB_P_FL	FW_PORT0_TPB_P_FL - @mlb_noldo_lib.MLB_NOLDO	39B2
FW_PWRON_RST_L	FW_PWRON_RST_L - @mlb_noldo_lib.MLB_NOLDO	38C3
FW_R0	FW_R0 - @mlb_noldo_lib.MLB_NOLDO	38B3
FW_R1	FW_R1 - @mlb_noldo_lib.MLB_NOLDO	38C3
FW_XI	FW_XI - @mlb_noldo_lib.MLB_NOLDO	38C3
FW_XO	FW_XO - @mlb_noldo_lib.MLB_NOLDO	38C3
FW_XO_R	FW_XO_R - @mlb_noldo_lib.MLB_NOLDO	38C3
GEYSER_GND_F	GEYSER_GND_F - @mlb_noldo_lib.MLB_NOLDO	40C5
GND_1V8S3_SGND	GND_1V8S3_SGND - @mlb_noldo_lib.MLB_NOLDO	61B5 61C6
GND_1V51V05S0_SGND	GND_1V51V05S0_SGND - @mlb_noldo_lib.MLB_NOLDO	62B7
GND_5V3V3S5_SGND	GND_5V3V3S5_SGND - @mlb_noldo_lib.MLB_NOLDO	59B7
GND_AUDIO_CODEC	GND_AUDIO_CODEC - @mlb_noldo_lib.MLB_NOLDO	5D1 64B2
	=GND_AUDIO_CODEC - @mlb_noldo_lib.MLB_NOLDO	54A6 54B6 54D2 55A8 55B8 55C8 56B3 56B5 57A5 57A6 57B3 57B3 57B5 57B8 57C3 57C5 57C8 57D8 64B3
GND_AUDIO_PWR	GND_AUDIO_PWR - @mlb_noldo_lib.MLB_NOLDO	5D1 64B2
	=GND_AUDIO_PWR - @mlb_noldo_lib.MLB_NOLDO	55A3 55A5 55A8 55B3 55B3 55B8 55C3 55C3 55C8 55D3 55D8 56C2 64B3
GND_AUDIO_SPDIF_DGND	GND_AUDIO_SPDIF_DGND - @mlb_noldo_lib.MLB_NOLDO	56A8 56C8
GND_BT_F	GND_BT_F - @mlb_noldo_lib.MLB_NOLDO	44B4
GND_CHASSIS_CPU	GND_CHASSIS_CPU - @mlb_noldo_lib.MLB_NOLDO	6B8
GND_CHASSIS_FANSCREW	GND_CHASSIS_FANSCREW - @mlb_noldo_lib.MLB_NOLDO	6B8
GND_CHGR_SGND	GND_CHGR_SGND - @mlb_noldo_lib.MLB_NOLDO	66A5 66B7
GND_IMVP6_SGND	GND_IMVP6_SGND - @mlb_noldo_lib.MLB_NOLDO	58A4 58B7 58C8
GND_SMC_AVSS	GND_SMC_AVSS - @mlb_noldo_lib.MLB_NOLDO	45C2 45C4 46B6 48A1 48B5 48C1 61C1 62A5 66B1 66C2
GND_SMC_LID_F	GND_SMC_LID_F - @mlb_noldo_lib.MLB_NOLDO	65A7
GPU_CRT_DDC_CLK	GPU_CRT_DDC_CLK - @mlb_noldo_lib.MLB_NOLDO	69B6 69D5
GPU_CRT_DDC_DATA	GPU_CRT_DDC_DATA - @mlb_noldo_lib.MLB_NOLDO	69B6 69D5
IDE_CSEL_PD	IDE_CSEL_PD - @mlb_noldo_lib.MLB_NOLDO	34B4
IDE_IRQ14	IDE_IRQ14 - @mlb_noldo_lib.MLB_NOLDO	21B6 34B6
IDE_PDA<0>	IDE_PDA<0> - @mlb_noldo_lib.MLB_NOLDO	21B5 34B5
IDE_PDA<1>	IDE_PDA<1> - @mlb_noldo_lib.MLB_NOLDO	21B5 34B5
IDE_PDA<2>	IDE_PDA<2> - @mlb_noldo_lib.MLB_NOLDO	21B5 34B3
IDE_PDCS1_L	IDE_PDCS1_L - @mlb_noldo_lib.MLB_NOLDO	21B5 34B5
IDE_PDCS3_L	IDE_PDCS3_L - @mlb_noldo_lib.MLB_NOLDO	21B5 34B3
IDE_PDD<0>	IDE_PDD<0> - @mlb_noldo_lib.MLB_NOLDO	21C5 34C5
IDE_PDD<1>	IDE_PDD<1> - @mlb_noldo_lib.MLB_NOLDO	21B5 34C5
IDE_PDD<2>	IDE_PDD<2> - @mlb_noldo_lib.MLB_NOLDO	21B5 34C5
IDE_PDD<3>	IDE_PDD<3> - @mlb_noldo_lib.MLB_NOLDO	21B5 34C5
IDE_PDD<4>	IDE_PDD<4> - @mlb_noldo_lib.MLB_NOLDO	21B5 34C5
IDE_PDD<5>	IDE_PDD<5> - @mlb_noldo_lib.MLB_NOLDO	21B5 34C5
IDE_PDD<6>	IDE_PDD<6> - @mlb_noldo_lib.MLB_NOLDO	21B5 34C5
IDE_PDD<7>	IDE_PDD<7> - @mlb_noldo_lib.MLB_NOLDO	21B5 34C5
IDE_PDD<8>	IDE_PDD<8> - @mlb_noldo_lib.MLB_NOLDO	21B5 34C3
IDE_PDD<9>	IDE_PDD<9> - @mlb_noldo_lib.MLB_NOLDO	21B5 34C3
IDE_PDD<10>	IDE_PDD<10> - @mlb_noldo_lib.MLB_NOLDO	21B5 34C3
IDE_PDD<11>	IDE_PDD<11> - @mlb_noldo_lib.MLB_NOLDO	21B5 34C3
IDE_PDD<12>	IDE_PDD<12> - @mlb_noldo_lib.MLB_NOLDO	21B5 34C3
IDE_PDD<13>	IDE_PDD<13> - @mlb_noldo_lib.MLB_NOLDO	21B5 34C3
IDE_PDD<14>	IDE_PDD<14> - @mlb_noldo_lib.MLB_NOLDO	21B5 34C3
IDE_PDD<15>	IDE_PDD<15> - @mlb_noldo_lib.MLB_NOLDO	21B5 34C3
IDE_PDDACK_L	IDE_PDDACK_L - @mlb_noldo_lib.MLB_NOLDO	21B6 34B3
IDE_PDDREQ	IDE_PDDREQ - @mlb_noldo_lib.MLB_NOLDO	21B6 34B6
IDE_PDIORDY	IDE_PDIORDY - @mlb_noldo_lib.MLB_NOLDO	21B6 34B6
IDE_PDIOR_L	IDE_PDIOR_L - @mlb_noldo_lib.MLB_NOLDO	21B6 34C3
IDE_PDIOW_L	IDE_PDIOW_L - @mlb_noldo_lib.MLB_NOLDO	21B6 34B5
IDE_RESET_L	IDE_RESET_L - @mlb_noldo_lib.MLB_NOLDO	23A3 34C5
IMVP6_BOOT1	IMVP6_BOOT1 - @mlb_noldo_lib.MLB_NOLDO	58A8 58C6
IMVP6_BOOT1_RC	IMVP6_BOOT1_RC - @mlb_noldo_lib.MLB_NOLDO	58D5
IMVP6_BOOT2	IMVP6_BOOT2 - @mlb_noldo_lib.MLB_NOLDO	58A6 58C6
IMVP6_BOOT2_RC	IMVP6_BOOT2_RC - @mlb_noldo_lib.MLB_NOLDO	58C5
IMVP6_COMP	IMVP6_COMP - @mlb_noldo_lib.MLB_NOLDO	5D7 58A4 58B7

IMVP6_COMP_RC	IMVP6_COMP_RC - @mlb_noldo_lib.MLB_NOLDO	58B8
IMVP6_CPU_ISENSE_N	IMVP6_CPU_ISENSE_N - @mlb_noldo_lib.MLB_NOLDO	48C4
IMVP6_CPU_ISENSE_P	IMVP6_CPU_ISENSE_P - @mlb_noldo_lib.MLB_NOLDO	48D4
IMVP6_DFB	IMVP6_DFB - @mlb_noldo_lib.MLB_NOLDO	58A4 58B6
IMVP6_DROOP	IMVP6_DROOP - @mlb_noldo_lib.MLB_NOLDO	48D5 58A4 58B6
IMVP6_FB	IMVP6_FB - @mlb_noldo_lib.MLB_NOLDO	58A4 58B7
IMVP6_FB2	IMVP6_FB2 - @mlb_noldo_lib.MLB_NOLDO	58A4 58B7
IMVP6_FET_RC1	IMVP6_FET_RC1 - @mlb_noldo_lib.MLB_NOLDO	58A8 58C2
IMVP6_FET_RC2	IMVP6_FET_RC2 - @mlb_noldo_lib.MLB_NOLDO	58A6 58B2
IMVP6_ISEN1	IMVP6_ISEN1 - @mlb_noldo_lib.MLB_NOLDO	58A8 58C6
IMVP6_ISEN2	IMVP6_ISEN2 - @mlb_noldo_lib.MLB_NOLDO	58A6 58C6
IMVP6_LGATE1	IMVP6_LGATE1 - @mlb_noldo_lib.MLB_NOLDO	58A8 58C6
IMVP6_LGATE2	IMVP6_LGATE2 - @mlb_noldo_lib.MLB_NOLDO	58A6 58C6
IMVP6_NTC	IMVP6_NTC - @mlb_noldo_lib.MLB_NOLDO	58C7
IMVP6_NTC_R	IMVP6_NTC_R - @mlb_noldo_lib.MLB_NOLDO	58C7
IMVP6_OCSET	IMVP6_OCSET - @mlb_noldo_lib.MLB_NOLDO	58A4 58B6
IMVP6_PHASE1	IMVP6_PHASE1 - @mlb_noldo_lib.MLB_NOLDO	58A8 58C6
IMVP6_PHASE2	IMVP6_PHASE2 - @mlb_noldo_lib.MLB_NOLDO	58A6 58C6
IMVP6_RBIAS	IMVP6_RBIAS - @mlb_noldo_lib.MLB_NOLDO	5D7 58A4 58B7
IMVP6_RTN	IMVP6_RTN - @mlb_noldo_lib.MLB_NOLDO	58A4 58B6
IMVP6_SOFT	IMVP6_SOFT - @mlb_noldo_lib.MLB_NOLDO	58A4 58C7
IMVP6_UGATE1	IMVP6_UGATE1 - @mlb_noldo_lib.MLB_NOLDO	58A8 58C6
IMVP6_UGATE2	IMVP6_UGATE2 - @mlb_noldo_lib.MLB_NOLDO	58A6 58C6
IMVP6_VDIFF	IMVP6_VDIFF - @mlb_noldo_lib.MLB_NOLDO	58A4 58B7
IMVP6_VDIFF_RC	IMVP6_VDIFF_RC - @mlb_noldo_lib.MLB_NOLDO	58B7
IMVP6_VO	IMVP6_VO - @mlb_noldo_lib.MLB_NOLDO	48C5 58A4 58B6
IMVP6_VO_R	IMVP6_VO_R - @mlb_noldo_lib.MLB_NOLDO	58B4
IMVP6_VO_R1	IMVP6_VO_R1 - @mlb_noldo_lib.MLB_NOLDO	58A8
IMVP6_VO_R2	IMVP6_VO_R2 - @mlb_noldo_lib.MLB_NOLDO	58A6
IMVP6_VR_TT	IMVP6_VR_TT - @mlb_noldo_lib.MLB_NOLDO	58C7
IMVP6_VSEN	IMVP6_VSEN - @mlb_noldo_lib.MLB_NOLDO	58A4 58B5
IMVP6_VSUM	IMVP6_VSUM - @mlb_noldo_lib.MLB_NOLDO	58A4 58C6
IMVP6_VSUM_R1	IMVP6_VSUM_R1 - @mlb_noldo_lib.MLB_NOLDO	58A8
IMVP6_VSUM_R2	IMVP6_VSUM_R2 - @mlb_noldo_lib.MLB_NOLDO	58A6
IMVP6_VW	IMVP6_VW - @mlb_noldo_lib.MLB_NOLDO	58A4 58B7
IMVP_DPRSLPVR	IMVP_DPRSLPVR - @mlb_noldo_lib.MLB_NOLDO	58C7
IMVP_VR_ON	IMVP_VR_ON - @mlb_noldo_lib.MLB_NOLDO	45D8 58C7
INT_PIRQA_L	INT_PIRQA_L - @mlb_noldo_lib.MLB_NOLDO	22A7 26C3
INT_PIRQB_L	INT_PIRQB_L - @mlb_noldo_lib.MLB_NOLDO	22A7 26C3
INT_PIRQC_L	INT_PIRQC_L - @mlb_noldo_lib.MLB_NOLDO	22A7 26C3
INT_PIRQD_L	INT_PIRQD_L - @mlb_noldo_lib.MLB_NOLDO	22A7 26C3 38A5
INT_SERIRQ	INT_SERIRQ - @mlb_noldo_lib.MLB_NOLDO	5C2 23C8 45C8 47C5 53C6
INVT_CHGND	INVT_CHGND - @mlb_noldo_lib.MLB_NOLDO	6D8 67C2
INV_BKLIGHT_PWM_L	INV_BKLIGHT_PWM_L - @mlb_noldo_lib.MLB_NOLDO	5B1 67D2
INV_GND	INV_GND - @mlb_noldo_lib.MLB_NOLDO	5B1 67D2
INV_PWREN_F_L	INV_PWREN_F_L - @mlb_noldo_lib.MLB_NOLDO	67D6
INV_PWREN_L	INV_PWREN_L - @mlb_noldo_lib.MLB_NOLDO	67D6
IR_RX_OUT	IR_RX_OUT - @mlb_noldo_lib.MLB_NOLDO	35C6 41C6
IR_RX_OUT_F	IR_RX_OUT_F - @mlb_noldo_lib.MLB_NOLDO	41C5
ISENSE_CAL_EN	ISENSE_CAL_EN - @mlb_noldo_lib.MLB_NOLDO	45B8 48A8
ISENSE_CAL_EN_L	ISENSE_CAL_EN_L - @mlb_noldo_lib.MLB_NOLDO	48A7
ISENSE_CAL_EN_LS5V	ISENSE_CAL_EN_LS5V - @mlb_noldo_lib.MLB_NOLDO	48A6
ITPRESET_L	ITPRESET_L - @mlb_noldo_lib.MLB_NOLDO	11B3
ITP_TDO	ITP_TDO - @mlb_noldo_lib.MLB_NOLDO	11B3
J2900_SA1	J2900_SA1 - @mlb_noldo_lib.MLB_NOLDO	29A4
KBC_MDE	KBC_MDE - @mlb_noldo_lib.MLB_NOLDO	45C2
LCDVDD_PWREN_L	LCDVDD_PWREN_L - @mlb_noldo_lib.MLB_NOLDO	67B7
LCDVDD_PWREN_L_R	LCDVDD_PWREN_L_R - @mlb_noldo_lib.MLB_NOLDO	67B6
LPC_AD<0>	LPC_AD<0> - @mlb_noldo_lib.MLB_NOLDO	5D2 21D4 45D8 47C6 53C6
LPC_AD<1>	LPC_AD<1> - @mlb_noldo_lib.MLB_NOLDO	5D2 21D4 45D8 47C6 53C6
LPC_AD<2>	LPC_AD<2> - @mlb_noldo_lib.MLB_NOLDO	5C2 21D4 45D8 47C5 53C6
LPC_AD<3>	LPC_AD<3> - @mlb_noldo_lib.MLB_NOLDO	5C2 21D4 45D8 47C5 53C6
LPC_FRAME_L	LPC_FRAME_L - @mlb_noldo_lib.MLB_NOLDO	5C2 21C5 45C8 47C6 53C6
LVDS_A_CLK_N	LVDS_A_CLK_N - @mlb_noldo_lib.MLB_NOLDO	13D5 67B2
LVDS_A_CLK_P	LVDS_A_CLK_P - @mlb_noldo_lib.MLB_NOLDO	13C5 67B2

LVDS_A_DATA_N<0>	LVDS_A_DATA_N<0> - @mlb_noldo_lib.MLB_NOLDO	13C5 67B2
LVDS_A_DATA_N<1>	LVDS_A_DATA_N<1> - @mlb_noldo_lib.MLB_NOLDO	13C5 67B2
LVDS_A_DATA_N<2>	LVDS_A_DATA_N<2> - @mlb_noldo_lib.MLB_NOLDO	13C5 67B2
LVDS_A_DATA_P<0>	LVDS_A_DATA_P<0> - @mlb_noldo_lib.MLB_NOLDO	13C5 67B2
LVDS_A_DATA_P<1>	LVDS_A_DATA_P<1> - @mlb_noldo_lib.MLB_NOLDO	13C5 67B2
LVDS_A_DATA_P<2>	LVDS_A_DATA_P<2> - @mlb_noldo_lib.MLB_NOLDO	13C5 67B2
LVDS_BKLTCTL	LVDS_BKLTCTL - @mlb_noldo_lib.MLB_NOLDO	13D5 67C6
LVDS_BKLTEN	LVDS_BKLTEN - @mlb_noldo_lib.MLB_NOLDO	13D5 67D7
LVDS_B_CLK_N	LVDS_B_CLK_N - @mlb_noldo_lib.MLB_NOLDO	6D6 13C5
	LVDS_B_CLK_N_SPN - @mlb_noldo_lib.MLB_NOLDO	5A7 6D5
LVDS_B_CLK_P	LVDS_B_CLK_P - @mlb_noldo_lib.MLB_NOLDO	6D6 13C5
	LVDS_B_CLK_P_SPN - @mlb_noldo_lib.MLB_NOLDO	5A7 6D5
LVDS_B_DATA_N<0>	LVDS_B_DATA_N<0> - @mlb_noldo_lib.MLB_NOLDO	6D6 13C5
	LVDS_B_DATA_N0_SPN - @mlb_noldo_lib.MLB_NOLDO	5A7 6D5
LVDS_B_DATA_N<1>	LVDS_B_DATA_N<1> - @mlb_noldo_lib.MLB_NOLDO	6D6 13C5
	LVDS_B_DATA_N1_SPN - @mlb_noldo_lib.MLB_NOLDO	5A7 6D5
LVDS_B_DATA_N<2>	LVDS_B_DATA_N<2> - @mlb_noldo_lib.MLB_NOLDO	6D6 13C5
	LVDS_B_DATA_N2_SPN - @mlb_noldo_lib.MLB_NOLDO	5A7 6D5
LVDS_B_DATA_P<0>	LVDS_B_DATA_P<0> - @mlb_noldo_lib.MLB_NOLDO	6D6 13C5
	LVDS_B_DATA_P0_SPN - @mlb_noldo_lib.MLB_NOLDO	6D5
LVDS_B_DATA_P<1>	LVDS_B_DATA_P<1> - @mlb_noldo_lib.MLB_NOLDO	6D6 13C5
	LVDS_B_DATA_P1_SPN - @mlb_noldo_lib.MLB_NOLDO	5A7 6D5
LVDS_B_DATA_P<2>	LVDS_B_DATA_P<2> - @mlb_noldo_lib.MLB_NOLDO	6D6 13C5
	LVDS_B_DATA_P2_SPN - @mlb_noldo_lib.MLB_NOLDO	5A7 6D5
LVDS_CLKCTLA	LVDS_CLKCTLA - @mlb_noldo_lib.MLB_NOLDO	13D5 67A7
LVDS_CLKCTLB	LVDS_CLKCTLB - @mlb_noldo_lib.MLB_NOLDO	13D5 67A7
LVDS_DDC_CLK	LVDS_DDC_CLK - @mlb_noldo_lib.MLB_NOLDO	13D5 67B6
LVDS_DDC_DATA	LVDS_DDC_DATA - @mlb_noldo_lib.MLB_NOLDO	13D5 67B6
LVDS_IBG	LVDS_IBG - @mlb_noldo_lib.MLB_NOLDO	13D5 67A6
LVDS_VDDEN	LVDS_VDDEN - @mlb_noldo_lib.MLB_NOLDO	13D5 67B7
MAX9705_L_N	MAX9705_L_N - @mlb_noldo_lib.MLB_NOLDO	55B6
MAX9705_R_N	MAX9705_R_N - @mlb_noldo_lib.MLB_NOLDO	55C6
MAX9705_SUB_N	MAX9705_SUB_N - @mlb_noldo_lib.MLB_NOLDO	55A6
MAX9890_CEXT	MAX9890_CEXT - @mlb_noldo_lib.MLB_NOLDO	57B1
MAX9890_INL	MAX9890_INL - @mlb_noldo_lib.MLB_NOLDO	57B2
MAX9890_INR	MAX9890_INR - @mlb_noldo_lib.MLB_NOLDO	57B2
MEMVTT_EN	MEMVTT_EN - @mlb_noldo_lib.MLB_NOLDO	31B5
MEMVTT_VREF	MEMVTT_VREF - @mlb_noldo_lib.MLB_NOLDO	31C4
MEM_A_A<0>	MEM_A_A<0> - @mlb_noldo_lib.MLB_NOLDO	15C5 28B4
MEM_A_A<13..0>	MEM_A_A<13..0> - @mlb_noldo_lib.MLB_NOLDO	30C6
MEM_A_A<1>	MEM_A_A<1> - @mlb_noldo_lib.MLB_NOLDO	15C5 28B6
MEM_A_A<2>	MEM_A_A<2> - @mlb_noldo_lib.MLB_NOLDO	15C5 28B4
MEM_A_A<3>	MEM_A_A<3> - @mlb_noldo_lib.MLB_NOLDO	15B5 28B6
MEM_A_A<4>	MEM_A_A<4> - @mlb_noldo_lib.MLB_NOLDO	15B5 28B4
MEM_A_A<5>	MEM_A_A<5> - @mlb_noldo_lib.MLB_NOLDO	15B5 28B6
MEM_A_A<6>	MEM_A_A<6> - @mlb_noldo_lib.MLB_NOLDO	15B5 28C4
MEM_A_A<7>	MEM_A_A<7> - @mlb_noldo_lib.MLB_NOLDO	15B5 28C4
MEM_A_A<8>	MEM_A_A<8> - @mlb_noldo_lib.MLB_NOLDO	15B5 28C6
MEM_A_A<9>	MEM_A_A<9> - @mlb_noldo_lib.MLB_NOLDO	15B5 28C6
MEM_A_A<10>	MEM_A_A<10> - @mlb_noldo_lib.MLB_NOLDO	15B5 28B6
MEM_A_A<11>	MEM_A_A<11> - @mlb_noldo_lib.MLB_NOLDO	15B5 28C4
MEM_A_A<12>	MEM_A_A<12> - @mlb_noldo_lib.MLB_NOLDO	15B5 28C6
MEM_A_A<13>	MEM_A_A<13> - @mlb_noldo_lib.MLB_NOLDO	15B5 28B4
MEM_A_A<14>	MEM_A_A<14> - @mlb_noldo_lib.MLB_NOLDO	6A4 28C4
	MEM_A_A14_SPN - @mlb_noldo_lib.MLB_NOLDO	6A3
MEM_A_A<15>	MEM_A_A<15> - @mlb_noldo_lib.MLB_NOLDO	6A4 28C4
	MEM_A_A15_SPN - @mlb_noldo_lib.MLB_NOLDO	6A3
MEM_A_BS<0>	MEM_A_BS<0> - @mlb_noldo_lib.MLB_NOLDO	15D5 28B6
MEM_A_BS<2..0>	MEM_A_BS<2..0> - @mlb_noldo_lib.MLB_NOLDO	30C6
MEM_A_BS<1>	MEM_A_BS<1> - @mlb_noldo_lib.MLB_NOLDO	15D5 28B4
MEM_A_BS<2>	MEM_A_BS<2> - @mlb_noldo_lib.MLB_NOLDO	15D5 28C6
MEM_A_CAS_L	MEM_A_CAS_L - @mlb_noldo_lib.MLB_NOLDO	15D5 28B6 30B6
MEM_A_DM<0>	MEM_A_DM<0> - @mlb_noldo_lib.MLB_NOLDO	15D5 28D4
MEM_A_DM<1>	MEM_A_DM<1> - @mlb_noldo_lib.MLB_NOLDO	15D5 28D4
MEM_A_DM<2>	MEM_A_DM<2> - @mlb_noldo_lib.MLB_NOLDO	15D5 28C6
MEM_A_DM<3>	MEM_A_DM<3> - @mlb_noldo_lib.MLB_NOLDO	15C5 28C4
MEM_A_DM<4>	MEM_A_DM<4> - @mlb_noldo_lib.MLB_NOLDO	15C5 28B4
MEM_A_DM<5>	MEM_A_DM<5> - @mlb_noldo_lib.MLB_NOLDO	15C5 28B6
MEM_A_DM<6>	MEM_A_DM<6> - @mlb_noldo_lib.MLB_NOLDO	15C5 28A6
MEM_A_DM<7>	MEM_A_DM<7> - @mlb_noldo_lib.MLB_NOLDO	15C5 28A4
MEM_A_DQ<0>	MEM_A_DQ<0> - @mlb_noldo_lib.MLB_NOLDO	15D7 28D4
MEM_A_DQ<1>	MEM_A_DQ<1> - @mlb_noldo_lib.MLB_NOLDO	15D7 28D4
MEM_A_DQ<2>	MEM_A_DQ<2> - @mlb_noldo_lib.MLB_NOLDO	15D7 28D6
MEM_A_DQ<3>	MEM_A_DQ<3> - @mlb_noldo_lib.MLB_NOLDO	15D7 28D6
MEM_A_DQ<4>	MEM_A_DQ<4> - @mlb_noldo_lib.MLB_NOLDO	15D7 28D4
MEM_A_DQ<5>	MEM_A_DQ<5> - @mlb_noldo_lib.MLB_NOLDO	15D7 28D4
MEM_A_DQ<6>	MEM_A_DQ<6> - @mlb_noldo_lib.MLB_NOLDO	15D7 28D6
MEM_A_DQ<7>	MEM_A_DQ<7> - @mlb_noldo_lib.MLB_NOLDO	15D7 28D6
MEM_A_DQ<8>	MEM_A_DQ<8> - @mlb_noldo_lib.MLB_NOLDO	15C7 28D6
MEM_A_DQ<9>	MEM_A_DQ<9> - @mlb_noldo_lib.MLB_NOLDO	15C7 28D6
MEM_A_DQ<10>	MEM_A_DQ<10> - @mlb_noldo_lib.MLB_NOLDO	15C7 28D6
MEM_A_DQ<11>	MEM_A_DQ<11> - @mlb_noldo_lib.MLB_NOLDO	15C7 28D4
MEM_A_DQ<12>	MEM_A_DQ<12> - @mlb_noldo_lib.MLB_NOLDO	15C7 28D4
MEM_A_DQ<13>	MEM_A_DQ<13> - @mlb_noldo_lib.MLB_NOLDO	15C7 28D6
MEM_A_DQ<14>	MEM_A_DQ<14> - @mlb_noldo_lib.MLB_NOLDO	15C7 28D4
MEM_A_DQ<15>	MEM_A_DQ<15> - @mlb_noldo_lib.MLB_NOLDO	15C7 28D4
MEM_A_DQ<16>	MEM_A_DQ<16> - @mlb_noldo_lib.MLB_NOLDO	15C7 28C4
MEM_A_DQ<17>	MEM_A_DQ<17> - @mlb_noldo_lib.MLB_NOLDO	15C7 28C6
MEM_A_DQ<18>	MEM_A_DQ<18> - @mlb_noldo_lib.MLB_NOLDO	15C7 28C4
MEM_A_DQ<19>	MEM_A_DQ<19> - @mlb_noldo_lib.MLB_NOLDO	15C7 28C6
MEM_A_DQ<20>	MEM_A_DQ<20> - @mlb_noldo_lib.MLB_NOLDO	15C7 28C6
MEM_A_DQ<21>	MEM_A_DQ<21> - @mlb_noldo_lib.MLB_NOLDO	15C7 28C4
MEM_A_DQ<22>	MEM_A_DQ<22> - @mlb_noldo_lib.MLB_NOLDO	15C7 28C6
MEM_A_DQ<23>	MEM_A_DQ<23> - @mlb_noldo_lib.MLB_NOLDO	15C7 28C4
MEM_A_DQ<24>	MEM_A_DQ<24> - @mlb_noldo_lib.MLB_NOLDO	15C7 28D6
MEM_A_DQ<25>	MEM_A_DQ<25> - @mlb_noldo_lib.MLB_NOLDO	15C7 28C6
MEM_A_DQ<26>	MEM_A_DQ<26> - @mlb_noldo_lib.MLB_NOLDO	15C7 28C4
MEM_A_DQ<27>	MEM_A_DQ<27> - @mlb_noldo_lib.MLB_NOLDO	15C7 28C6
MEM_A_DQ<28>	MEM_A_DQ<28> - @mlb_noldo_lib.MLB_NOLDO	15C7 28C4
MEM_A_DQ<29>	MEM_A_DQ<29> - @mlb_noldo_lib.MLB_NOLDO	15C7 28D4
MEM_A_DQ<30>	MEM_A_DQ<30> - @mlb_noldo_lib.MLB_NOLDO	15C7 28C4
MEM_A_DQ<31>	MEM_A_DQ<31> - @mlb_noldo_lib.MLB_NOLDO	15C7 28C6
MEM_A_DQ<32>	MEM_A_DQ<32> - @mlb_noldo_lib.MLB_NOLDO	15C7 28B6
MEM_A_DQ<33>	MEM_A_DQ<33> - @mlb_noldo_lib.MLB_NOLDO	15C7 28B4
MEM_A_DQ<34>	MEM_A_DQ<34> - @mlb_noldo_lib.MLB_NOLDO	15B7 28B4
MEM_A_DQ<35>	MEM_A_DQ<35> - @mlb_noldo_lib.MLB_NOLDO	15B7 28B4
MEM_A_DQ<36>	MEM_A_DQ<36> - @mlb_noldo_lib.MLB_NOLDO	15B7 28B4
MEM_A_DQ<37>	MEM_A_DQ<37> - @mlb_noldo_lib.MLB_NOLDO	15B7 28B6
MEM_A_DQ<38>	MEM_A_DQ<38> - @mlb_noldo_lib.MLB_NOLDO	15B7 28B6
MEM_A_DQ<39>	MEM_A_DQ<39> - @mlb_noldo_lib.MLB_NOLDO	15B7 28B6
MEM_A_DQ<40>	MEM_A_DQ<40> - @mlb_noldo_lib.MLB_NOLDO	15B7 28B4
MEM_A_DQ<41>	MEM_A_DQ<41> - @mlb_noldo_lib.MLB_NOLDO	15B7 28B6
MEM_A_DQ<42>	MEM_A_DQ<42> - @mlb_noldo_lib.MLB_NOLDO	15B7 28A4
MEM_A_DQ<43>	MEM_A_DQ<43> - @mlb_noldo_lib.MLB_NOLDO	15B7 28A6
MEM_A_DQ<44>	MEM_A_DQ<44> - @mlb_noldo_lib.MLB_NOLDO	15B7 28B6
MEM_A_DQ<45>	MEM_A_DQ<45> - @mlb_noldo_lib.MLB_NOLDO	15B7 28B4
MEM_A_DQ<46>	MEM_A_DQ<46> - @mlb_noldo_lib.MLB_NOLDO	15B7 28A4
MEM_A_DQ<47>	MEM_A_DQ<47> - @mlb_noldo_lib.MLB_NOLDO	15B7 28A6
MEM_A_DQ<48>	MEM_A_DQ<48> - @mlb_noldo_lib.MLB_NOLDO	15B7 28A6
MEM_A_DQ<49>	MEM_A_DQ<49> - @mlb_noldo_lib.MLB_NOLDO	15B7 28A6
MEM_A_DQ<50>	MEM_A_DQ<50> - @mlb_noldo_lib.MLB_NOLDO	15B7 28A4
MEM_A_DQ<51>	MEM_A_DQ<51> - @mlb_noldo_lib.MLB_NOLDO	15B7 28A4
MEM_A_DQ<52>	MEM_A_DQ<52> - @mlb_noldo_lib.MLB_NOLDO	15B7 28A6
MEM_A_DQ<53>	MEM_A_DQ<53> - @mlb_noldo_lib.MLB_NOLDO	15B7 28A4
MEM_A_DQ<54>	MEM_A_DQ<54> - @mlb_noldo_lib.MLB_NOLDO	15B7 28A4
MEM_A_DQ<55>	MEM_A_DQ<55> - @mlb_noldo_lib.MLB_NOLDO	15B7 28A6
MEM_A_DQ<56>	MEM_A_DQ<56> - @mlb_noldo_lib.MLB_NOLDO	15B7 28A6
MEM_A_DQ<57>	MEM_A_DQ<57> - @mlb_noldo_lib.MLB_NOLDO	15B7 28A6
MEM_A_DQ<58>	MEM_A_DQ<58> - @mlb_noldo_lib.MLB_NOLDO	15B7 28A6
MEM_A_DQ<59>	MEM_A_DQ<59> - @mlb_noldo_lib.MLB_NOLDO	15B7 28A4
MEM_A_DQ<60>	MEM_A_DQ<60> - @mlb_noldo_lib.MLB_NOLDO	15A7 28A4
MEM_A_DQ<61>	MEM_A_DQ<61> - @mlb_noldo_lib.MLB_NOLDO	15A7 28A4
MEM_A_DQ<62>	MEM_A_DQ<62> - @mlb_noldo_lib.MLB_NOLDO	15A7 28A4
MEM_A_DQ<63>	MEM_A_DQ<63> - @mlb_noldo_lib.MLB_NOLDO	15A7 28A6
MEM_A_DQS_N<0>	MEM_A_DQS_N<0> - @mlb_noldo_lib.MLB_NOLDO	15C5 28D6
MEM_A_DQS_N<1>	MEM_A_DQS_N<1> - @mlb_noldo_lib.MLB_NOLDO	15C5 28D6
MEM_A_DQS_N<2>	MEM_A_DQS_N<2> - @mlb_noldo_lib.MLB_NOLDO	15C5 28C4
MEM_A_DQS_N<3>	MEM_A_DQS_N<3> - @mlb_noldo_lib.MLB_NOLDO	15C5 28C6
MEM_A_DQS_N<4>	MEM_A_DQS_N<4> - @mlb_noldo_lib.MLB_NOLDO	15C5 28B6
MEM_A_DQS_N<5>	MEM_A_DQS_N<5> - @mlb_noldo_lib.MLB_NOLDO	15C5 28B4
MEM_A_DQS_N<6>	MEM_A_DQS_N<6> - @mlb_noldo_lib.MLB_NOLDO	15C5 28A4
MEM_A_DQS_N<7>	MEM_A_DQS_N<7> - @mlb_noldo_lib.MLB_NOLDO	15C5 28A6
MEM_A_DQS_P<0>	MEM_A_DQS_P<0> - @mlb_noldo_lib.MLB_NOLDO	15C5 28D6
MEM_A_DQS_P<1>	MEM_A_DQS_P<1> - @mlb_noldo_lib.MLB_NOLDO	15C5 28D6
MEM_A_DQS_P<2>	MEM_A_DQS_P<2> - @mlb_noldo_lib.MLB_NOLDO	15C5 28C4
MEM_A_DQS_P<3>	MEM_A_DQS_P<3> - @mlb_noldo_lib.MLB_NOLDO	15C5 28C6
MEM_A_DQS_P<4>	MEM_A_DQS_P<4> - @mlb_noldo_lib.MLB_NOLDO	15C5 28B6
MEM_A_DQS_P<5>	MEM_A_DQS_P<5> - @mlb_noldo_lib.MLB_NOLDO	15C5 28B4
MEM_A_DQS_P<6>	MEM_A_DQS_P<6> - @mlb_noldo_lib.MLB_NOLDO	15C5 28A4
MEM_A_DQS_P<7>	MEM_A_DQS_P<7> - @mlb_noldo_lib.MLB_NOLDO	15C5 28A6
MEM_A_RAS_L	MEM_A_RAS_L - @mlb_noldo_lib.MLB_NOLDO	15B5 28B4 30B6
MEM_A_WE_L	MEM_A_WE_L - @mlb_noldo_lib.MLB_NOLDO	15B5 28B6 30B6
MEM_B_A<0>	MEM_B_A<0> - @mlb_noldo_lib.MLB_NOLDO	15C2 29B4 30B5
MEM_B_A<1>	MEM_B_A<1> - @mlb_noldo_lib.MLB_NOLDO	15C2 29B6 30B5
MEM_B_A<2>	MEM_B_A<2> - @mlb_noldo_lib.MLB_NOLDO	15C2 29B4 30B5
MEM_B_A<3>	MEM_B_A<3> - @mlb_noldo_lib.MLB_NOLDO	15B2 29B6 30B5
MEM_B_A<4>	MEM_B_A<4> - @mlb_noldo_lib.MLB_NOLDO	15B2 29B4 30B5
MEM_B_A<5>	MEM_B_A<5> - @mlb_noldo_lib.MLB_NOLDO	15B2 29B6 30B5
MEM_B_A<6>	MEM_B_A<6> - @mlb_noldo_lib.MLB_NOLDO	15B2 29C4 30B5
MEM_B_A<7>	MEM_B_A<7> - @mlb_noldo_lib.MLB_NOLDO	15B2 29C4 30B5
MEM_B_A<8>	MEM_B_A<8> - @mlb_noldo_lib.MLB_NOLDO	15B2 29C6 30B5
MEM_B_A<9>	MEM_B_A<9> - @mlb_noldo_lib.MLB_NOLDO	15B2 29C6 30B5
MEM_B_A<10>	MEM_B_A<10> - @mlb_noldo_lib.MLB_NOLDO	15B2 29B6 30B5
MEM_B_A<11>	MEM_B_A<11> - @mlb_noldo_lib.MLB_NOLDO	15B2 29C4 30A5
MEM_B_A<12>	MEM_B_A<12> - @mlb_noldo_lib.MLB_NOLDO	15B2 29C6 30A5
MEM_B_A<13>	MEM_B_A<13> - @mlb_noldo_lib.MLB_NOLDO	15B2 29B4 30A5
MEM_B_A<14>	MEM_B_A<14> - @mlb_noldo_lib.MLB_NOLDO	6A4 29C4
	MEM_B_A14_SPN - @mlb_noldo_lib.MLB_NOLDO	6A3
MEM_B_A<15>	MEM_B_A<15> - @mlb_noldo_lib.MLB_NOLDO	6A4 29C4
	MEM_B_A15_SPN - @mlb_noldo_lib.MLB_NOLDO	6A3
MEM_B_BS<0>	MEM_B_BS<0> - @mlb_noldo_lib.MLB_NOLDO	15D2 29B6
MEM_B_BS<2..0>	MEM_B_BS<2..0> - @mlb_noldo_lib.MLB_NOLDO	30A6
MEM_B_BS<1>	MEM_B_BS<1> - @mlb_noldo_lib.MLB_NOLDO	15D2 29B4
MEM_B_BS<2>	MEM_B_BS<2> - @mlb_noldo_lib.MLB_NOLDO	15D2 29C6
MEM_B_CAS_L	MEM_B_CAS_L - @mlb_noldo_lib.MLB_NOLDO	15D2 29B6 30A6
MEM_B_DM<0>	MEM_B_DM<0> - @mlb_noldo_lib.MLB_NOLDO	15D2 29D4
MEM_B_DM<1>	MEM_B_DM<1> - @mlb_noldo_lib.MLB_NOLDO	15D2 29D4
MEM_B_DM<2>	MEM_B_DM<2> - @mlb_noldo_lib.MLB_NOLDO	15D2 29C4
MEM_B_DM<3>	MEM_B_DM<3> - @mlb_noldo_lib.MLB_NOLDO	15C2 29C6
MEM_B_DM<4>	MEM_B_DM<4> - @mlb_noldo_lib.MLB_NOLDO	15C2 29A4
MEM_B_DM<5>	MEM_B_DM<5> - @mlb_noldo_lib.MLB_NOLDO	15C2 29A6
MEM_B_DM<6>	MEM_B_DM<6> - @mlb_noldo_lib.MLB_NOLDO	15C2 29A6
MEM_B_DM<7>	MEM_B_DM<7> - @mlb_noldo_lib.MLB_NOLDO	15C2 29B4
MEM_B_DQ<0>	MEM_B_DQ<0> - @mlb_noldo_lib.MLB_NOLDO	15D4 29D4
MEM_B_DQ<1>	MEM_B_DQ<1> - @mlb_noldo_lib.MLB_NOLDO	15D4 29D6
MEM_B_DQ<2>	MEM_B_DQ<2> - @mlb_noldo_lib.MLB_NOLDO	15D4 29D6
MEM_B_DQ<3>	MEM_B_DQ<3> - @mlb_noldo_lib.MLB_NOLDO	15D4 29D6
MEM_B_DQ<4>	MEM_B_DQ<4> - @mlb_noldo_lib.MLB_NOLDO	15D4 29D4
MEM_B_DQ<5>	MEM_B_DQ<5> - @mlb_noldo_lib.MLB_NOLDO	15D4 29D6
MEM_B_DQ<6>	MEM_B_DQ<6> - @mlb_noldo_lib.MLB_NOLDO	15D4 29D4
MEM_B_DQ<7>	MEM_B_DQ<7> - @mlb_noldo_lib.MLB_NOLDO	15D4 29D4
MEM_B_DQ<8>	MEM_B_DQ<8> - @mlb_noldo_lib.MLB_NOLDO	15C4 29D6
MEM_B_DQ<9>	MEM_B_DQ<9> - @mlb_noldo_lib.MLB_NOLDO	15C4 29D4
MEM_B_DQ<10>	MEM_B_DQ<10> - @mlb_noldo_lib.MLB_NOLDO	15C4 29D6
MEM_B_DQ<11>	MEM_B_DQ<11> - @mlb_noldo_lib.MLB_NOLDO	15C4 29D4
MEM_B_DQ<12>	MEM_B_DQ<12> - @mlb_noldo_lib.MLB_NOLDO	15C4 29D6
MEM_B_DQ<13>	MEM_B_DQ<13> - @mlb_noldo_lib.MLB_NOLDO	15C4 29D6
MEM_B_DQ<14>	MEM_B_DQ<14> - @mlb_noldo_lib.MLB_NOLDO	15C4 29D4
MEM_B_DQ<15>	MEM_B_DQ<15> - @mlb_noldo_lib.MLB_NOLDO	15C4 29D4
MEM_B_DQ<16>	MEM_B_DQ<16> - @mlb_noldo_lib.MLB_NOLDO	15C4 29C4
MEM_B_DQ<17>	MEM_B_DQ<17> - @mlb_noldo_lib.MLB_NOLDO	15C4 29C6
MEM_B_DQ<18>	MEM_B_DQ<18> - @mlb_noldo_lib.MLB_NOLDO	15C4 29C6
MEM_B_DQ<19>	MEM_B_DQ<19> - @mlb_noldo_lib.MLB_NOLDO	15C4 29C4
MEM_B_DQ<20>	MEM_B_DQ<20> - @mlb_noldo_lib.MLB_NOLDO	15C4 29C6
MEM_B_DQ<21>	MEM_B_DQ<21> - @mlb_noldo_lib.MLB_NOLDO	15C4 29C4
MEM_B_DQ<22>	MEM_B_DQ<22> - @mlb_noldo_lib.MLB_NOLDO	15C4 29C6
MEM_B_DQ<23>	MEM_B_DQ<23> - @mlb_noldo_lib.MLB_NOLDO	15C4 29C4
MEM_B_DQ<24>	MEM_B_DQ<24> - @mlb_noldo_lib.MLB_NOLDO	15C4 29C4
MEM_B_DQ<25>	MEM_B_DQ<25> - @mlb_noldo_lib.MLB_NOLDO	15C4 29C4
MEM_B_DQ<26>	MEM_B_DQ<26> - @mlb_noldo_lib.MLB_NOLDO	15C4 29C4
MEM_B_DQ<27>	MEM_B_DQ<27> - @mlb_noldo_lib.MLB_NOLDO	15C4 29C6
MEM_B_DQ<28>	MEM_B_DQ<28> - @mlb_noldo_lib.MLB_NOLDO	15C4 29C4
MEM_B_DQ<29>	MEM_B_DQ<29> - @mlb_noldo_lib.MLB_NOLDO	15C4 29C6
MEM_B_DQ<30>	MEM_B_DQ<30> - @mlb_noldo_lib.MLB_NOLDO	15C4 29C6
MEM_B_DQ<31>	MEM_B_DQ<31> - @mlb_noldo_lib.MLB_NOLDO	15C4 29C6
MEM_B_DQ<32>	MEM_B_DQ<32> - @mlb_noldo_lib.MLB_NOLDO	15C4 29A6
MEM_B_DQ<33>	MEM_B_DQ<33> - @mlb_noldo_lib.MLB_NOLDO	15C4 29A4
MEM_B_DQ<34>	MEM_B_DQ<34> - @mlb_noldo_lib.MLB_NOLDO	15B4 29A6
MEM_B_DQ<35>	MEM_B_DQ<35> - @mlb_noldo_lib.MLB_NOLDO	15B4 29A4
MEM_B_DQ<36>	MEM_B_DQ<36> - @mlb_noldo_lib.MLB_NOLDO	15B4 29A4
MEM_B_DQ<37>	MEM_B_DQ<37> - @mlb_noldo_lib.MLB_NOLDO	15B4 29A6
MEM_B_DQ<38>	MEM_B_DQ<38> - @mlb_noldo_lib.MLB_NOLDO	15B4 29A6
MEM_B_DQ<39>	MEM_B_DQ<39> - @mlb_noldo_lib.MLB_NOLDO	15B4 29A4
MEM_B_DQ<40>	MEM_B_DQ<40> - @mlb_noldo_lib.MLB_NOLDO	15B4 29A4
MEM_B_DQ<41>	MEM_B_DQ<41> - @mlb_noldo_lib.MLB_NOLDO	15B4 29A6
MEM_B_DQ<42>	MEM_B_DQ<42> - @mlb_noldo_lib.MLB_NOLDO	15B4 29A4
MEM_B_DQ<43>	MEM_B_DQ<43> - @mlb_noldo_lib.MLB_NOLDO	15B4 29A6
MEM_B_DQ<44>	MEM_B_DQ<44> - @mlb_noldo_lib.MLB_NOLDO	15B4 29A6
MEM_B_DQ<45>	MEM_B_DQ<45> - @mlb_noldo_lib.MLB_NOLDO	15B4 29A6
MEM_B_DQ<46>	MEM_B_DQ<46> - @mlb_noldo_lib.MLB_NOLDO	15B4 29A4
MEM_B_DQ<47>	MEM_B_DQ<47> - @mlb_noldo_lib.MLB_NOLDO	15B4 29A4
MEM_B_DQ<48>	MEM_B_DQ<48> - @mlb_noldo_lib.MLB_NOLDO	15B4 29B4
MEM_B_DQ<49>	MEM_B_DQ<49> - @mlb_noldo_lib.MLB_NOLDO	15B4 29A6
MEM_B_DQ<50>	MEM_B_DQ<50> - @mlb_noldo_lib.MLB_NOLDO	15B4 29B6
MEM_B_DQ<51>	MEM_B_DQ<51> - @mlb_noldo_lib.MLB_NOLDO	15B4 29A4
MEM_B_DQ<52>	MEM_B_DQ<52> - @mlb_noldo_lib.MLB_NOLDO	15B4 29A6
MEM_B_DQ<53>	MEM_B_DQ<53> - @mlb_noldo_lib.MLB_NOLDO	15B4 29B4
MEM_B_DQ<54>	MEM_B_DQ<54> - @mlb_noldo_lib.MLB_NOLDO	15B4 29A4
MEM_B_DQ<55>	MEM_B_DQ<55> - @mlb_noldo_lib.MLB_NOLDO	15B4 29B6
MEM_B_DQ<56>	MEM_B_DQ<56> - @mlb_noldo_lib.MLB_NOLDO	15B4 29B4
MEM_B_DQ<57>	MEM_B_DQ<57> - @mlb_noldo_lib.MLB_NOLDO	15B4 29B6
MEM_B_DQ<58>	MEM_B_DQ<58> - @mlb_noldo_lib.MLB_NOLDO	15B4 29B6
MEM_B_DQ<59>	MEM_B_DQ<59> - @mlb_noldo_lib.MLB_NOLDO	15B4 29B4
MEM_B_DQ<60>	MEM_B_DQ<60> - @mlb_noldo_lib.MLB_NOLDO	15A4 29B6
MEM_B_DQ<61>	MEM_B_DQ<61> - @mlb_noldo_lib.MLB_NOLDO	15A4 29B4
MEM_B_DQ<62>	MEM_B_DQ<62> - @mlb_noldo_lib.MLB_NOLDO	15A4 29B6
MEM_B_DQ<63>	MEM_B_DQ<63> - @mlb_noldo_lib.MLB_NOLDO	15A4 29B4
MEM_B_DQS_N<0>	MEM_B_DQS_N<0> - @mlb_noldo_lib.MLB_NOLDO	15C2 29D6
MEM_B_DQS_N<1>	MEM_B_DQS_N<1> -	15C2 29D6

	@mlb_noldo_lib.MLB_NOLDO	
MEM_B_DQS_N<2>	MEM_B_DQS_N<2> - @mlb_noldo_lib.MLB_NOLDO	15C2 29C6
MEM_B_DQS_N<3>	MEM_B_DQS_N<3> - @mlb_noldo_lib.MLB_NOLDO	15C2 29C4
MEM_B_DQS_N<4>	MEM_B_DQS_N<4> - @mlb_noldo_lib.MLB_NOLDO	15C2 29A6
MEM_B_DQS_N<5>	MEM_B_DQS_N<5> - @mlb_noldo_lib.MLB_NOLDO	15C2 29A4
MEM_B_DQS_N<6>	MEM_B_DQS_N<6> - @mlb_noldo_lib.MLB_NOLDO	15C2 29B4
MEM_B_DQS_N<7>	MEM_B_DQS_N<7> - @mlb_noldo_lib.MLB_NOLDO	15C2 29B6
MEM_B_DQS_P<0>	MEM_B_DQS_P<0> - @mlb_noldo_lib.MLB_NOLDO	15C2 29D6
MEM_B_DQS_P<1>	MEM_B_DQS_P<1> - @mlb_noldo_lib.MLB_NOLDO	15C2 29D6
MEM_B_DQS_P<2>	MEM_B_DQS_P<2> - @mlb_noldo_lib.MLB_NOLDO	15C2 29C6
MEM_B_DQS_P<3>	MEM_B_DQS_P<3> - @mlb_noldo_lib.MLB_NOLDO	15C2 29C4
MEM_B_DQS_P<4>	MEM_B_DQS_P<4> - @mlb_noldo_lib.MLB_NOLDO	15C2 29A6
MEM_B_DQS_P<5>	MEM_B_DQS_P<5> - @mlb_noldo_lib.MLB_NOLDO	15C2 29A4
MEM_B_DQS_P<6>	MEM_B_DQS_P<6> - @mlb_noldo_lib.MLB_NOLDO	15C2 29A4
MEM_B_DQS_P<7>	MEM_B_DQS_P<7> - @mlb_noldo_lib.MLB_NOLDO	15C2 29B6
MEM_B_RAS_L	MEM_B_RAS_L - @mlb_noldo_lib.MLB_NOLDO	15B2 29B4 30A6
MEM_B_WE_L	MEM_B_WE_L - @mlb_noldo_lib.MLB_NOLDO	15B2 29B6 30A6
MEM_CKE<0>	MEM_CKE<0> - @mlb_noldo_lib.MLB_NOLDO	14C4 28C6
MEM_CKE<3..0>	MEM_CKE<3..0> - @mlb_noldo_lib.MLB_NOLDO	30D6
MEM_CKE<1>	MEM_CKE<1> - @mlb_noldo_lib.MLB_NOLDO	14C4 28C4
MEM_CKE<2>	MEM_CKE<2> - @mlb_noldo_lib.MLB_NOLDO	14C4 29C6
MEM_CKE<3>	MEM_CKE<3> - @mlb_noldo_lib.MLB_NOLDO	14C4 29C4
MEM_CLK_N<0>	MEM_CLK_N<0> - @mlb_noldo_lib.MLB_NOLDO	14D4 28D4
MEM_CLK_N<1>	MEM_CLK_N<1> - @mlb_noldo_lib.MLB_NOLDO	14D4 28A4
MEM_CLK_N<2>	MEM_CLK_N<2> - @mlb_noldo_lib.MLB_NOLDO	14D4 29A4
MEM_CLK_N<3>	MEM_CLK_N<3> - @mlb_noldo_lib.MLB_NOLDO	14D4 29D4
MEM_CLK_P<0>	MEM_CLK_P<0> - @mlb_noldo_lib.MLB_NOLDO	14D4 28D4
MEM_CLK_P<1>	MEM_CLK_P<1> - @mlb_noldo_lib.MLB_NOLDO	14D4 28A4
MEM_CLK_P<2>	MEM_CLK_P<2> - @mlb_noldo_lib.MLB_NOLDO	14D4 29A4
MEM_CLK_P<3>	MEM_CLK_P<3> - @mlb_noldo_lib.MLB_NOLDO	14D4 29D4
MEM_CS_L<0>	MEM_CS_L<0> - @mlb_noldo_lib.MLB_NOLDO	14C4 28B4
MEM_CS_L<3..0>	MEM_CS_L<3..0> - @mlb_noldo_lib.MLB_NOLDO	30D6
MEM_CS_L<1>	MEM_CS_L<1> - @mlb_noldo_lib.MLB_NOLDO	14C4 28B6
MEM_CS_L<2>	MEM_CS_L<2> - @mlb_noldo_lib.MLB_NOLDO	14C4 29B4
MEM_CS_L<3>	MEM_CS_L<3> - @mlb_noldo_lib.MLB_NOLDO	14C4 29B6
MEM_ISENSE	MEM_ISENSE - @mlb_noldo_lib.MLB_NOLDO	61C2
MEM_ISENSE_R1_N	MEM_ISENSE_R1_N - @mlb_noldo_lib.MLB_NOLDO	61C3
MEM_ISENSE_R1_P	MEM_ISENSE_R1_P - @mlb_noldo_lib.MLB_NOLDO	61C3
MEM_ISENSE_R2	MEM_ISENSE_R2 - @mlb_noldo_lib.MLB_NOLDO	61C2
MEM_ISENSE_VCC	MEM_ISENSE_VCC - @mlb_noldo_lib.MLB_NOLDO	61C2
MEM_ODT<0>	MEM_ODT<0> - @mlb_noldo_lib.MLB_NOLDO	14C4 28B4
MEM_ODT<3..0>	MEM_ODT<3..0> - @mlb_noldo_lib.MLB_NOLDO	30D6
MEM_ODT<1>	MEM_ODT<1> - @mlb_noldo_lib.MLB_NOLDO	14C4 28B6
MEM_ODT<2>	MEM_ODT<2> - @mlb_noldo_lib.MLB_NOLDO	14C4 29B4
MEM_ODT<3>	MEM_ODT<3> - @mlb_noldo_lib.MLB_NOLDO	14C4 29B6
MEM_RCOMP	MEM_RCOMP - @mlb_noldo_lib.MLB_NOLDO	14C4
MEM_RCOMP_L	MEM_RCOMP_L - @mlb_noldo_lib.MLB_NOLDO	14C4
MEM_VREF_A	MEM_VREF_A - @mlb_noldo_lib.MLB_NOLDO	28D1 28D7
MEM_VREF_B	MEM_VREF_B - @mlb_noldo_lib.MLB_NOLDO	29D1 29D7
MEM_VREF_NB_0	MEM_VREF_NB_0 - @mlb_noldo_lib.MLB_NOLDO	14C2 19C7
MEM_VREF_NB_1	MEM_VREF_NB_1 - @mlb_noldo_lib.MLB_NOLDO	14C2 19C6
MIC_HI	MIC_HI - @mlb_noldo_lib.MLB_NOLDO	56B3 57A8
MIC_HI_CONN	MIC_HI_CONN - @mlb_noldo_lib.MLB_NOLDO	56B1 56D3
MIC_HI_F	MIC_HI_F - @mlb_noldo_lib.MLB_NOLDO	56B2
MIC_IN	MIC_IN - @mlb_noldo_lib.MLB_NOLDO	57A7
MIC_LO	MIC_LO - @mlb_noldo_lib.MLB_NOLDO	56B3 57A8
MIC_LO_CONN	MIC_LO_CONN - @mlb_noldo_lib.MLB_NOLDO	56B1 56D3
MIC_LO_F	MIC_LO_F - @mlb_noldo_lib.MLB_NOLDO	56B2
MIC_SHIELD	MIC_SHIELD - @mlb_noldo_lib.MLB_NOLDO	56B3 57A8
MIC_SHIELD_F	MIC_SHIELD_F - @mlb_noldo_lib.MLB_NOLDO	56B2
MIC_SHLD_CONN	MIC_SHLD_CONN - @mlb_noldo_lib.MLB_NOLDO	56B1 56D3
MM1573DN_NR	MM1573DN_NR - @mlb_noldo_lib.MLB_NOLDO	19C3
NB_BSEL<0>	NB_BSEL<0> - @mlb_noldo_lib.MLB_NOLDO	14C6 33C7
NB_BSEL<1>	NB_BSEL<1> - @mlb_noldo_lib.MLB_NOLDO	14C6 33B7
NB_BSEL<2>	NB_BSEL<2> - @mlb_noldo_lib.MLB_NOLDO	14C6 33B7

NB_CFG<3>	NB_CFG<3> - @mlb_noldo_lib.MLB_NOLDO	6D4 14C6
	TP_NB_CFG3 - @mlb_noldo_lib.MLB_NOLDO	6D3
NB_CFG<4>	NB_CFG<4> - @mlb_noldo_lib.MLB_NOLDO	6D4 14C6
	TP_NB_CFG4 - @mlb_noldo_lib.MLB_NOLDO	6D3
NB_CFG<5>	NB_CFG<5> - @mlb_noldo_lib.MLB_NOLDO	14C6 20C7
NB_CFG<6>	NB_CFG<6> - @mlb_noldo_lib.MLB_NOLDO	6D4 14C6
	TP_NB_CFG6 - @mlb_noldo_lib.MLB_NOLDO	6D3
NB_CFG<7>	NB_CFG<7> - @mlb_noldo_lib.MLB_NOLDO	14C6 20C7
NB_CFG<8>	NB_CFG<8> - @mlb_noldo_lib.MLB_NOLDO	6D4 14C6
	TP_NB_CFG8 - @mlb_noldo_lib.MLB_NOLDO	6D3
NB_CFG<9>	NB_CFG<9> - @mlb_noldo_lib.MLB_NOLDO	14C6 20B7
NB_CFG<10>	NB_CFG<10> - @mlb_noldo_lib.MLB_NOLDO	6D4 14C6
	TP_NB_CFG10 - @mlb_noldo_lib.MLB_NOLDO	6D3
NB_CFG<11>	NB_CFG<11> - @mlb_noldo_lib.MLB_NOLDO	6D4 14C6
	TP_NB_CFG11 - @mlb_noldo_lib.MLB_NOLDO	6D3
NB_CFG<12>	NB_CFG<12> - @mlb_noldo_lib.MLB_NOLDO	6D4 14C6
	TP_NB_CFG12 - @mlb_noldo_lib.MLB_NOLDO	6D3
NB_CFG<13>	NB_CFG<13> - @mlb_noldo_lib.MLB_NOLDO	6D4 14C6
	TP_NB_CFG13 - @mlb_noldo_lib.MLB_NOLDO	6D3
NB_CFG<14>	NB_CFG<14> - @mlb_noldo_lib.MLB_NOLDO	6D4 14C6
	TP_NB_CFG14 - @mlb_noldo_lib.MLB_NOLDO	6D3
NB_CFG<15>	NB_CFG<15> - @mlb_noldo_lib.MLB_NOLDO	6D4 14C6
	TP_NB_CFG15 - @mlb_noldo_lib.MLB_NOLDO	6D3
NB_CFG<16>	NB_CFG<16> - @mlb_noldo_lib.MLB_NOLDO	14C6 20C5
NB_CFG<17>	NB_CFG<17> - @mlb_noldo_lib.MLB_NOLDO	6D4 14C6
	TP_NB_CFG17 - @mlb_noldo_lib.MLB_NOLDO	6D3
NB_CFG<18>	NB_CFG<18> - @mlb_noldo_lib.MLB_NOLDO	14C6 20B5
NB_CFG<19>	NB_CFG<19> - @mlb_noldo_lib.MLB_NOLDO	14C6 20B5
NB_CFG<20>	NB_CFG<20> - @mlb_noldo_lib.MLB_NOLDO	14B6 20A5
NB_CLK100M_GCLKIN_N	NB_CLK100M_GCLKIN_N - @mlb_noldo_lib.MLB_NOLDO	14C4 33B2 33C4
NB_CLK100M_GCLKIN_P	NB_CLK100M_GCLKIN_P - @mlb_noldo_lib.MLB_NOLDO	14C4 33C2 33C4
NB_CLK_DREFCLKIN_N	NB_CLK_DREFCLKIN_N - @mlb_noldo_lib.MLB_NOLDO	14C4 33B3 33C2
NB_CLK_DREFCLKIN_P	NB_CLK_DREFCLKIN_P - @mlb_noldo_lib.MLB_NOLDO	14C4 33B3 33C2
NB_CLK_DREFSSCLKIN_N	NB_CLK_DREFSSCLKIN_N - @mlb_noldo_lib.MLB_NOLDO	14C4 33A4 33C2
NB_CLK_DREFSSCLKIN_P	NB_CLK_DREFSSCLKIN_P - @mlb_noldo_lib.MLB_NOLDO	14B4 33A3 33C2
NB_FSB_VREF	NB_FSB_VREF - @mlb_noldo_lib.MLB_NOLDO	12C4
NB_FSB_XRCOMP	NB_FSB_XRCOMP - @mlb_noldo_lib.MLB_NOLDO	12A6
NB_FSB_XSCOMP	NB_FSB_XSCOMP - @mlb_noldo_lib.MLB_NOLDO	12A6
NB_FSB_XSWING	NB_FSB_XSWING - @mlb_noldo_lib.MLB_NOLDO	12A6
NB_FSB_YRCOMP	NB_FSB_YRCOMP - @mlb_noldo_lib.MLB_NOLDO	12A6
NB_FSB_YSCOMP	NB_FSB_YSCOMP - @mlb_noldo_lib.MLB_NOLDO	12A6
NB_FSB_YSWING	NB_FSB_YSWING - @mlb_noldo_lib.MLB_NOLDO	12A6
NB_ISENSE	NB_ISENSE - @mlb_noldo_lib.MLB_NOLDO	62A6
NB_ISENSE_R1_N	NB_ISENSE_R1_N - @mlb_noldo_lib.MLB_NOLDO	62A7
NB_ISENSE_R1_P	NB_ISENSE_R1_P - @mlb_noldo_lib.MLB_NOLDO	62A7
NB_ISENSE_R2	NB_ISENSE_R2 - @mlb_noldo_lib.MLB_NOLDO	62A6
NB_ISENSE_VCC	NB_ISENSE_VCC - @mlb_noldo_lib.MLB_NOLDO	62A6
NB_RIGHT_DOWN_SCREW	NB_RIGHT_DOWN_SCREW - @mlb_noldo_lib.MLB_NOLDO	6A8
NB_RST_IN_L_R	NB_RST_IN_L_R - @mlb_noldo_lib.MLB_NOLDO	14B6
NB_SB_SYNC_L	NB_SB_SYNC_L - @mlb_noldo_lib.MLB_NOLDO	14B6 22A6
NB_TV_DCONSEL0	NB_TV_DCONSEL0 - @mlb_noldo_lib.MLB_NOLDO	14D6
NB_TV_DCONSEL1	NB_TV_DCONSEL1 - @mlb_noldo_lib.MLB_NOLDO	14C6
NB_VCCSM_LF1	NB_VCCSM_LF1 - @mlb_noldo_lib.MLB_NOLDO	16B4
NB_VCCSM_LF2	NB_VCCSM_LF2 - @mlb_noldo_lib.MLB_NOLDO	16B4
NB_VCCSM_LF4	NB_VCCSM_LF4 - @mlb_noldo_lib.MLB_NOLDO	16B8
NB_VCCSM_LF5	NB_VCCSM_LF5 - @mlb_noldo_lib.MLB_NOLDO	16B8
NB_VTTLF_CAP1	NB_VTTLF_CAP1 - @mlb_noldo_lib.MLB_NOLDO	17A4
NB_VTTLF_CAP2	NB_VTTLF_CAP2 - @mlb_noldo_lib.MLB_NOLDO	17A4
NB_VTTLF_CAP3	NB_VTTLF_CAP3 - @mlb_noldo_lib.MLB_NOLDO	17B4
ODD_PWR_EN_SLOW_STARTT	ODD_PWR_EN_SLOW_START - @mlb_noldo_lib.MLB_NOLDO	34C7
ODD_PWR_EN_SLOW_START_L	ODD_PWR_EN_SLOW_START_L - @mlb_noldo_lib.MLB_NOLDO	34C6
ODD_PWR_EN_SLOW_START_L_R	ODD_PWR_EN_SLOW_START_L_R - @mlb_noldo_lib.MLB_NOLDO	34C5

ONEWIRE_DCIN_DIV	ONEWIRE_DCIN_DIV - @mlb_noldo_lib.MLB_NOLDO	65C5
ONEWIRE_EN	ONEWIRE_EN - @mlb_noldo_lib.MLB_NOLDO	65C7
ONEWIRE_ESD	ONEWIRE_ESD - @mlb_noldo_lib.MLB_NOLDO	65C5
ONEWIRE_OV	ONEWIRE_OV - @mlb_noldo_lib.MLB_NOLDO	65C6
ONEWIRE_PU_EN	ONEWIRE_PU_EN - @mlb_noldo_lib.MLB_NOLDO	65B7
ONEWIRE_PU_EN_L	ONEWIRE_PU_EN_L - @mlb_noldo_lib.MLB_NOLDO	65C8
ONEWIRE_PWR_EN_L	ONEWIRE_PWR_EN_L - @mlb_noldo_lib.MLB_NOLDO	65C7
ONEWIRE_PWR_EN_L_DIV	ONEWIRE_PWR_EN_L_DIV - @mlb_noldo_lib.MLB_NOLDO	65C6
P0V52_SMC_LSREF	P0V52_SMC_LSREF - @mlb_noldo_lib.MLB_NOLDO	46D3
P1V8S0_EN_L_RC	P1V8S0_EN_L_RC - @mlb_noldo_lib.MLB_NOLDO	63A5
P3V3S0_EN_RC	P3V3S0_EN_RC - @mlb_noldo_lib.MLB_NOLDO	63B5
P3V3S3_EN_L_RC	P3V3S3_EN_L_RC - @mlb_noldo_lib.MLB_NOLDO	63C5
P3V42G3H5_BOOST	P3V42G3H5_BOOST - @mlb_noldo_lib.MLB_NOLDO	63D2
P3V42G3H_FB	P3V42G3H_FB - @mlb_noldo_lib.MLB_NOLDO	5D7 63D2
P5VS0_EN_RC	P5VS0_EN_RC - @mlb_noldo_lib.MLB_NOLDO	63C5
P5VS3_EN_L_RC	P5VS3_EN_L_RC - @mlb_noldo_lib.MLB_NOLDO	63D5
PATA_PWR_EN_L	PATA_PWR_EN_L - @mlb_noldo_lib.MLB_NOLDO	23B3 23C3
PBUS_S0_SMC_VSENSE	PBUS_S0_SMC_VSENSE - @mlb_noldo_lib.MLB_NOLDO	48C6
PBUS_SMC_VSENSE_EN	PBUS_SMC_VSENSE_EN - @mlb_noldo_lib.MLB_NOLDO	48C8
PBUS_SMC_VSENSE_EN_L	PBUS_SMC_VSENSE_EN_L - @mlb_noldo_lib.MLB_NOLDO	48C7
PCIE_A_D2R_C_N	PCIE_A_D2R_C_N - @mlb_noldo_lib.MLB_NOLDO	36D6
PCIE_A_D2R_C_P	PCIE_A_D2R_C_P - @mlb_noldo_lib.MLB_NOLDO	36D6
PCIE_A_D2R_N	PCIE_A_D2R_N - @mlb_noldo_lib.MLB_NOLDO	22D4 36D5
PCIE_A_D2R_P	PCIE_A_D2R_P - @mlb_noldo_lib.MLB_NOLDO	22D4 36D5
PCIE_A_R2D_C_N	PCIE_A_R2D_C_N - @mlb_noldo_lib.MLB_NOLDO	22D4 36C5
PCIE_A_R2D_C_P	PCIE_A_R2D_C_P - @mlb_noldo_lib.MLB_NOLDO	22D4 36C5
PCIE_A_R2D_N	PCIE_A_R2D_N - @mlb_noldo_lib.MLB_NOLDO	36C6
PCIE_A_R2D_P	PCIE_A_R2D_P - @mlb_noldo_lib.MLB_NOLDO	36C6
PCIE_B_D2R_N	PCIE_B_D2R_N - @mlb_noldo_lib.MLB_NOLDO	22D4 43C7
PCIE_B_D2R_P	PCIE_B_D2R_P - @mlb_noldo_lib.MLB_NOLDO	22D4 43C7
PCIE_B_R2D_C_N	PCIE_B_R2D_C_N - @mlb_noldo_lib.MLB_NOLDO	22D4 43B7
PCIE_B_R2D_C_P	PCIE_B_R2D_C_P - @mlb_noldo_lib.MLB_NOLDO	22D4 43B7
PCIE_B_R2D_N	PCIE_B_R2D_N - @mlb_noldo_lib.MLB_NOLDO	43B6
PCIE_B_R2D_P	PCIE_B_R2D_P - @mlb_noldo_lib.MLB_NOLDO	43B6
PCIE_C_D2R_N	PCIE_C_D2R_N - @mlb_noldo_lib.MLB_NOLDO	6C4 22D4
	PCIE_C_D2R_N_SPN - @mlb_noldo_lib.MLB_NOLDO	6C3
PCIE_C_D2R_P	PCIE_C_D2R_P - @mlb_noldo_lib.MLB_NOLDO	6C4 22D4
	PCIE_C_D2R_P_SPN - @mlb_noldo_lib.MLB_NOLDO	6C3
PCIE_C_R2D_C_N	PCIE_C_R2D_C_N - @mlb_noldo_lib.MLB_NOLDO	6C4 22D4
	PCIE_C_R2D_C_N_SPN - @mlb_noldo_lib.MLB_NOLDO	6C3
PCIE_C_R2D_C_P	PCIE_C_R2D_C_P - @mlb_noldo_lib.MLB_NOLDO	6C4 22D4
	PCIE_C_R2D_C_P_SPN - @mlb_noldo_lib.MLB_NOLDO	6C3
PCIE_D_D2R_N	PCIE_D_D2R_N - @mlb_noldo_lib.MLB_NOLDO	6C4 22D4
	PCIE_D_D2R_N_SPN - @mlb_noldo_lib.MLB_NOLDO	6C3
PCIE_D_D2R_P	PCIE_D_D2R_P - @mlb_noldo_lib.MLB_NOLDO	6C4 22D4
	PCIE_D_D2R_P_SPN - @mlb_noldo_lib.MLB_NOLDO	6C3
PCIE_D_R2D_C_N	PCIE_D_R2D_C_N - @mlb_noldo_lib.MLB_NOLDO	6C4 22D4
	PCIE_D_R2D_C_N_SPN - @mlb_noldo_lib.MLB_NOLDO	6C3
PCIE_D_R2D_C_P	PCIE_D_R2D_C_P - @mlb_noldo_lib.MLB_NOLDO	6C4 22D4
	PCIE_D_R2D_C_P_SPN - @mlb_noldo_lib.MLB_NOLDO	6C3
PCIE_E_D2R_N	PCIE_E_D2R_N - @mlb_noldo_lib.MLB_NOLDO	6C4 22C4
	PCIE_E_D2R_N_SPN - @mlb_noldo_lib.MLB_NOLDO	6C3
PCIE_E_D2R_P	PCIE_E_D2R_P - @mlb_noldo_lib.MLB_NOLDO	6C4 22C4
	PCIE_E_D2R_P_SPN - @mlb_noldo_lib.MLB_NOLDO	6C3
PCIE_E_R2D_C_N	PCIE_E_R2D_C_N - @mlb_noldo_lib.MLB_NOLDO	6C4 22C4
	PCIE_E_R2D_C_N_SPN - @mlb_noldo_lib.MLB_NOLDO	6C3
PCIE_E_R2D_C_P	PCIE_E_R2D_C_P - @mlb_noldo_lib.MLB_NOLDO	6C4 22C4
	PCIE_E_R2D_C_P_SPN - @mlb_noldo_lib.MLB_NOLDO	6C3
PCIE_F_D2R_N	PCIE_F_D2R_N - @mlb_noldo_lib.MLB_NOLDO	6C4 22C4
	PCIE_F_D2R_N_SPN - @mlb_noldo_lib.MLB_NOLDO	6C3
PCIE_F_D2R_P	PCIE_F_D2R_P - @mlb_noldo_lib.MLB_NOLDO	6C4 22C4
	PCIE_F_D2R_P_SPN - @mlb_noldo_lib.MLB_NOLDO	6C3

PCIE_F_R2D_C_N	PCIE_F_R2D_C_N - @mlb_noldo_lib.MLB_NOLDO	6C4 22C4
	PCIE_F_R2D_C_N_SPN - @mlb_noldo_lib.MLB_NOLDO	6C3
PCIE_F_R2D_C_P	PCIE_F_R2D_C_P - @mlb_noldo_lib.MLB_NOLDO	6B4 22C4
	PCIE_F_R2D_C_P_SPN - @mlb_noldo_lib.MLB_NOLDO	6B3
PCIE_WAKE_L	PCIE_WAKE_L - @mlb_noldo_lib.MLB_NOLDO	23C8 36C6 43C6
PCI_AD<0>	PCI_AD<0> - @mlb_noldo_lib.MLB_NOLDO	22B7 38C5
PCI_AD<1>	PCI_AD<1> - @mlb_noldo_lib.MLB_NOLDO	22B7 38C5
PCI_AD<2>	PCI_AD<2> - @mlb_noldo_lib.MLB_NOLDO	22B7 38C5
PCI_AD<3>	PCI_AD<3> - @mlb_noldo_lib.MLB_NOLDO	22B7 38C5
PCI_AD<4>	PCI_AD<4> - @mlb_noldo_lib.MLB_NOLDO	22B7 38C5
PCI_AD<5>	PCI_AD<5> - @mlb_noldo_lib.MLB_NOLDO	22B7 38C5
PCI_AD<6>	PCI_AD<6> - @mlb_noldo_lib.MLB_NOLDO	22B7 38C5
PCI_AD<7>	PCI_AD<7> - @mlb_noldo_lib.MLB_NOLDO	22B7 38C5
PCI_AD<8>	PCI_AD<8> - @mlb_noldo_lib.MLB_NOLDO	22B7 38C5
PCI_AD<9>	PCI_AD<9> - @mlb_noldo_lib.MLB_NOLDO	22B7 38C5
PCI_AD<10>	PCI_AD<10> - @mlb_noldo_lib.MLB_NOLDO	22B7 38C5
PCI_AD<11>	PCI_AD<11> - @mlb_noldo_lib.MLB_NOLDO	22B7 38C5
PCI_AD<12>	PCI_AD<12> - @mlb_noldo_lib.MLB_NOLDO	22B7 38B5
PCI_AD<13>	PCI_AD<13> - @mlb_noldo_lib.MLB_NOLDO	22B7 38B5
PCI_AD<14>	PCI_AD<14> - @mlb_noldo_lib.MLB_NOLDO	22B7 38B5
PCI_AD<15>	PCI_AD<15> - @mlb_noldo_lib.MLB_NOLDO	22B7 38B5
PCI_AD<16>	PCI_AD<16> - @mlb_noldo_lib.MLB_NOLDO	22B7 38B5
PCI_AD<17>	PCI_AD<17> - @mlb_noldo_lib.MLB_NOLDO	22B7 38B5
PCI_AD<18>	PCI_AD<18> - @mlb_noldo_lib.MLB_NOLDO	22B7 38B5
PCI_AD<19>	PCI_AD<19> - @mlb_noldo_lib.MLB_NOLDO	22A7 38B6
PCI_AD<20>	PCI_AD<20> - @mlb_noldo_lib.MLB_NOLDO	22A7 38B5
PCI_AD<21>	PCI_AD<21> - @mlb_noldo_lib.MLB_NOLDO	22A7 38B5
PCI_AD<22>	PCI_AD<22> - @mlb_noldo_lib.MLB_NOLDO	22A7 38B5
PCI_AD<23>	PCI_AD<23> - @mlb_noldo_lib.MLB_NOLDO	22A7 38B5
PCI_AD<24>	PCI_AD<24> - @mlb_noldo_lib.MLB_NOLDO	22A7 38B5
PCI_AD<25>	PCI_AD<25> - @mlb_noldo_lib.MLB_NOLDO	22A7 38B5
PCI_AD<26>	PCI_AD<26> - @mlb_noldo_lib.MLB_NOLDO	22A7 38B5
PCI_AD<27>	PCI_AD<27> - @mlb_noldo_lib.MLB_NOLDO	22A7 38B5
PCI_AD<28>	PCI_AD<28> - @mlb_noldo_lib.MLB_NOLDO	22A7 38B5
PCI_AD<29>	PCI_AD<29> - @mlb_noldo_lib.MLB_NOLDO	22A7 38B5
PCI_AD<30>	PCI_AD<30> - @mlb_noldo_lib.MLB_NOLDO	22A7 38B5
PCI_AD<31>	PCI_AD<31> - @mlb_noldo_lib.MLB_NOLDO	22A7 38B5
PCI_CLK_FW	PCI_CLK_FW - @mlb_noldo_lib.MLB_NOLDO	33D6 38A5
PCI_CLK_PORT80_LPC	PCI_CLK_PORT80_LPC - @mlb_noldo_lib.MLB_NOLDO	5C2 33D6 47C5
PCI_CLK_SB	PCI_CLK_SB - @mlb_noldo_lib.MLB_NOLDO	22A6 33D6
PCI_CLK_SMC	PCI_CLK_SMC - @mlb_noldo_lib.MLB_NOLDO	33D6 45C8
PCI_CLK_TPM	PCI_CLK_TPM - @mlb_noldo_lib.MLB_NOLDO	33D6 53C6
PCI_C_BE_L<0>	PCI_C_BE_L<0> - @mlb_noldo_lib.MLB_NOLDO	22B6 38B5
PCI_C_BE_L<1>	PCI_C_BE_L<1> - @mlb_noldo_lib.MLB_NOLDO	22B6 38B5
PCI_C_BE_L<2>	PCI_C_BE_L<2> - @mlb_noldo_lib.MLB_NOLDO	22B6 38B5
PCI_C_BE_L<3>	PCI_C_BE_L<3> - @mlb_noldo_lib.MLB_NOLDO	22B6 38B5
PCI_DEVSEL_L	PCI_DEVSEL_L - @mlb_noldo_lib.MLB_NOLDO	22A6 26D3 38A5
PCI_FRAME_L	PCI_FRAME_L - @mlb_noldo_lib.MLB_NOLDO	22A7 26D3 38A5
PCI_GNT3_L	PCI_GNT3_L - @mlb_noldo_lib.MLB_NOLDO	22B6 38A5
PCI_IRDY_L	PCI_IRDY_L - @mlb_noldo_lib.MLB_NOLDO	22A6 26D3 38A5
PCI_LOCK_L	PCI_LOCK_L - @mlb_noldo_lib.MLB_NOLDO	22A6 26D3
PCI_PAR	PCI_PAR - @mlb_noldo_lib.MLB_NOLDO	22A6 38B5
PCI_PERR_L	PCI_PERR_L - @mlb_noldo_lib.MLB_NOLDO	22A6 26D3 38A5
PCI_PME_FW_L	PCI_PME_FW_L - @mlb_noldo_lib.MLB_NOLDO	22B5 38A5
PCI_REQ0_L	PCI_REQ0_L - @mlb_noldo_lib.MLB_NOLDO	22B6 26C3
PCI_REQ1_L	PCI_REQ1_L - @mlb_noldo_lib.MLB_NOLDO	22B6 26C3
PCI_REQ2_L	PCI_REQ2_L - @mlb_noldo_lib.MLB_NOLDO	22B6 26C3
PCI_REQ3_L	PCI_REQ3_L - @mlb_noldo_lib.MLB_NOLDO	22B6 26C3 38A5
PCI_RST_L	PCI_RST_L - @mlb_noldo_lib.MLB_NOLDO	22A6 38A6
PCI_SERR_L	PCI_SERR_L - @mlb_noldo_lib.MLB_NOLDO	22A6 26D3 38A5
PCI_STOP_L	PCI_STOP_L - @mlb_noldo_lib.MLB_NOLDO	22A6 26D3 38A5
PCI_TRDY_L	PCI_TRDY_L - @mlb_noldo_lib.MLB_NOLDO	22A6 26D3 38A5
PEG_COMP	PEG_COMP - @mlb_noldo_lib.MLB_NOLDO	13D3

PEG_D2R_N<0>	PEG_D2R_N<0> - @mlb_noldo_lib.MLB_NOLDO	6D6 13D3
	PEG_D2R_N0_SPN - @mlb_noldo_lib.MLB_NOLDO	6D5
PEG_D2R_N<1>	PEG_D2R_N<1> - @mlb_noldo_lib.MLB_NOLDO	13D3 68B6
PEG_D2R_N<2>	PEG_D2R_N<2> - @mlb_noldo_lib.MLB_NOLDO	6D6 13D3
	PEG_D2R_N2_SPN - @mlb_noldo_lib.MLB_NOLDO	6D5
PEG_D2R_N<3>	PEG_D2R_N<3> - @mlb_noldo_lib.MLB_NOLDO	6C6 13D3
	PEG_D2R_N3_SPN - @mlb_noldo_lib.MLB_NOLDO	6C5
PEG_D2R_N<4>	PEG_D2R_N<4> - @mlb_noldo_lib.MLB_NOLDO	6C6 13D3
	PEG_D2R_N4_SPN - @mlb_noldo_lib.MLB_NOLDO	6C5
PEG_D2R_N<5>	PEG_D2R_N<5> - @mlb_noldo_lib.MLB_NOLDO	6C6 13D3
	PEG_D2R_N5_SPN - @mlb_noldo_lib.MLB_NOLDO	6C5
PEG_D2R_N<6>	PEG_D2R_N<6> - @mlb_noldo_lib.MLB_NOLDO	6C6 13D3
	PEG_D2R_N6_SPN - @mlb_noldo_lib.MLB_NOLDO	6C5
PEG_D2R_N<7>	PEG_D2R_N<7> - @mlb_noldo_lib.MLB_NOLDO	6C6 13D3
	PEG_D2R_N7_SPN - @mlb_noldo_lib.MLB_NOLDO	6C5
PEG_D2R_N<8>	PEG_D2R_N<8> - @mlb_noldo_lib.MLB_NOLDO	6C6 13D3
	PEG_D2R_N8_SPN - @mlb_noldo_lib.MLB_NOLDO	6C5
PEG_D2R_N<9>	PEG_D2R_N<9> - @mlb_noldo_lib.MLB_NOLDO	6C6 13D3
	PEG_D2R_N9_SPN - @mlb_noldo_lib.MLB_NOLDO	6C5
PEG_D2R_N<10>	PEG_D2R_N<10> - @mlb_noldo_lib.MLB_NOLDO	6C6 13C3
	PEG_D2R_N10_SPN - @mlb_noldo_lib.MLB_NOLDO	6C5
PEG_D2R_N<11>	PEG_D2R_N<11> - @mlb_noldo_lib.MLB_NOLDO	6C6 13C3
	PEG_D2R_N11_SPN - @mlb_noldo_lib.MLB_NOLDO	6C5
PEG_D2R_N<12>	PEG_D2R_N<12> - @mlb_noldo_lib.MLB_NOLDO	6C6 13C3
	PEG_D2R_N12_SPN - @mlb_noldo_lib.MLB_NOLDO	6C5
PEG_D2R_N<13>	PEG_D2R_N<13> - @mlb_noldo_lib.MLB_NOLDO	6C6 13C3
	PEG_D2R_N13_SPN - @mlb_noldo_lib.MLB_NOLDO	6C5
PEG_D2R_N<14>	PEG_D2R_N<14> - @mlb_noldo_lib.MLB_NOLDO	6C6 13C3
	PEG_D2R_N14_SPN - @mlb_noldo_lib.MLB_NOLDO	6C5
PEG_D2R_N<15>	PEG_D2R_N<15> - @mlb_noldo_lib.MLB_NOLDO	6C6 13C3
	PEG_D2R_N15_SPN - @mlb_noldo_lib.MLB_NOLDO	6C5
PEG_D2R_P<0>	PEG_D2R_P<0> - @mlb_noldo_lib.MLB_NOLDO	6C6 13C3
	PEG_D2R_P0_SPN - @mlb_noldo_lib.MLB_NOLDO	6C5
PEG_D2R_P<1>	PEG_D2R_P<1> - @mlb_noldo_lib.MLB_NOLDO	13C3 68B6
PEG_D2R_P<2>	PEG_D2R_P<2> - @mlb_noldo_lib.MLB_NOLDO	6C6 13C3
	PEG_D2R_P2_SPN - @mlb_noldo_lib.MLB_NOLDO	6C5
PEG_D2R_P<3>	PEG_D2R_P<3> - @mlb_noldo_lib.MLB_NOLDO	6C6 13C3
	PEG_D2R_P3_SPN - @mlb_noldo_lib.MLB_NOLDO	6C5
PEG_D2R_P<4>	PEG_D2R_P<4> - @mlb_noldo_lib.MLB_NOLDO	6C6 13C3
	PEG_D2R_P4_SPN - @mlb_noldo_lib.MLB_NOLDO	6C5
PEG_D2R_P<5>	PEG_D2R_P<5> - @mlb_noldo_lib.MLB_NOLDO	6C6 13C3
	PEG_D2R_P5_SPN - @mlb_noldo_lib.MLB_NOLDO	6C5
PEG_D2R_P<6>	PEG_D2R_P<6> - @mlb_noldo_lib.MLB_NOLDO	6C6 13C3
	PEG_D2R_P6_SPN - @mlb_noldo_lib.MLB_NOLDO	6C5
PEG_D2R_P<7>	PEG_D2R_P<7> - @mlb_noldo_lib.MLB_NOLDO	6C6 13C3
	PEG_D2R_P7_SPN - @mlb_noldo_lib.MLB_NOLDO	6C5
PEG_D2R_P<8>	PEG_D2R_P<8> - @mlb_noldo_lib.MLB_NOLDO	6C6 13C3
	PEG_D2R_P8_SPN - @mlb_noldo_lib.MLB_NOLDO	6C5
PEG_D2R_P<9>	PEG_D2R_P<9> - @mlb_noldo_lib.MLB_NOLDO	6C6 13C3
	PEG_D2R_P9_SPN - @mlb_noldo_lib.MLB_NOLDO	6C5
PEG_D2R_P<10>	PEG_D2R_P<10> - @mlb_noldo_lib.MLB_NOLDO	6C6 13C3
	PEG_D2R_P10_SPN - @mlb_noldo_lib.MLB_NOLDO	6C5
PEG_D2R_P<11>	PEG_D2R_P<11> - @mlb_noldo_lib.MLB_NOLDO	6C6 13C3
	PEG_D2R_P11_SPN - @mlb_noldo_lib.MLB_NOLDO	6C5
PEG_D2R_P<12>	PEG_D2R_P<12> - @mlb_noldo_lib.MLB_NOLDO	6C6 13C3
	PEG_D2R_P12_SPN - @mlb_noldo_lib.MLB_NOLDO	6C5
PEG_D2R_P<13>	PEG_D2R_P<13> - @mlb_noldo_lib.MLB_NOLDO	6C6 13C3
	PEG_D2R_P13_SPN - @mlb_noldo_lib.MLB_NOLDO	6C5
PEG_D2R_P<14>	PEG_D2R_P<14> - @mlb_noldo_lib.MLB_NOLDO	6B6 13C3
	PEG_D2R_P14_SPN - @mlb_noldo_lib.MLB_NOLDO	6B5
PEG_D2R_P<15>	PEG_D2R_P<15> - @mlb_noldo_lib.MLB_NOLDO	6B6 13C3
	PEG_D2R_P15_SPN - @mlb_noldo_lib.MLB_NOLDO	6B5

PEG_R2D_C_N<0>	PEG_R2D_C_N<0> - @mlb_noldo_lib.MLB_NOLDO	13C3 68C6
PEG_R2D_C_N<1>	PEG_R2D_C_N<1> - @mlb_noldo_lib.MLB_NOLDO	13C3 68C6
PEG_R2D_C_N<2>	PEG_R2D_C_N<2> - @mlb_noldo_lib.MLB_NOLDO	13C3 68B6
PEG_R2D_C_N<3>	PEG_R2D_C_N<3> - @mlb_noldo_lib.MLB_NOLDO	13B3 68B6
PEG_R2D_C_N<4>	PEG_R2D_C_N<4> - @mlb_noldo_lib.MLB_NOLDO	6B6 13B3
	PEG_R2D_C_N4_SPN - @mlb_noldo_lib.MLB_NOLDO	6B5
PEG_R2D_C_N<5>	PEG_R2D_C_N<5> - @mlb_noldo_lib.MLB_NOLDO	6B6 13B3
	PEG_R2D_C_N5_SPN - @mlb_noldo_lib.MLB_NOLDO	6B5
PEG_R2D_C_N<6>	PEG_R2D_C_N<6> - @mlb_noldo_lib.MLB_NOLDO	6B6 13B3
	PEG_R2D_C_N6_SPN - @mlb_noldo_lib.MLB_NOLDO	6B5
PEG_R2D_C_N<7>	PEG_R2D_C_N<7> - @mlb_noldo_lib.MLB_NOLDO	6B6 13B3
	PEG_R2D_C_N7_SPN - @mlb_noldo_lib.MLB_NOLDO	6B5
PEG_R2D_C_N<8>	PEG_R2D_C_N<8> - @mlb_noldo_lib.MLB_NOLDO	6B6 13B3
	PEG_R2D_C_N8_SPN - @mlb_noldo_lib.MLB_NOLDO	6B5
PEG_R2D_C_N<9>	PEG_R2D_C_N<9> - @mlb_noldo_lib.MLB_NOLDO	6B6 13B3
	PEG_R2D_C_N9_SPN - @mlb_noldo_lib.MLB_NOLDO	6B5
PEG_R2D_C_N<10>	PEG_R2D_C_N<10> - @mlb_noldo_lib.MLB_NOLDO	6B6 13B3
	PEG_R2D_C_N10_SPN - @mlb_noldo_lib.MLB_NOLDO	6B5
PEG_R2D_C_N<11>	PEG_R2D_C_N<11> - @mlb_noldo_lib.MLB_NOLDO	6B6 13B3
	PEG_R2D_C_N11_SPN - @mlb_noldo_lib.MLB_NOLDO	6B5
PEG_R2D_C_N<12>	PEG_R2D_C_N<12> - @mlb_noldo_lib.MLB_NOLDO	6B6 13B3
	PEG_R2D_C_N12_SPN - @mlb_noldo_lib.MLB_NOLDO	6B5
PEG_R2D_C_N<13>	PEG_R2D_C_N<13> - @mlb_noldo_lib.MLB_NOLDO	6B6 13B3
	PEG_R2D_C_N13_SPN - @mlb_noldo_lib.MLB_NOLDO	6B5
PEG_R2D_C_N<14>	PEG_R2D_C_N<14> - @mlb_noldo_lib.MLB_NOLDO	6B6 13B3
	PEG_R2D_C_N14_SPN - @mlb_noldo_lib.MLB_NOLDO	6B5
PEG_R2D_C_N<15>	PEG_R2D_C_N<15> - @mlb_noldo_lib.MLB_NOLDO	6B6 13B3
	PEG_R2D_C_N15_SPN - @mlb_noldo_lib.MLB_NOLDO	6B5
PEG_R2D_C_P<0>	PEG_R2D_C_P<0> - @mlb_noldo_lib.MLB_NOLDO	13B3 68C6
PEG_R2D_C_P<1>	PEG_R2D_C_P<1> - @mlb_noldo_lib.MLB_NOLDO	13B3 68C6
PEG_R2D_C_P<2>	PEG_R2D_C_P<2> - @mlb_noldo_lib.MLB_NOLDO	13B3 68B6
PEG_R2D_C_P<3>	PEG_R2D_C_P<3> - @mlb_noldo_lib.MLB_NOLDO	13B3 68B6
PEG_R2D_C_P<4>	PEG_R2D_C_P<4> - @mlb_noldo_lib.MLB_NOLDO	6B6 13B3
	PEG_R2D_C_P4_SPN - @mlb_noldo_lib.MLB_NOLDO	6B5
PEG_R2D_C_P<5>	PEG_R2D_C_P<5> - @mlb_noldo_lib.MLB_NOLDO	6B6 13B3
	PEG_R2D_C_P5_SPN - @mlb_noldo_lib.MLB_NOLDO	6B5
PEG_R2D_C_P<6>	PEG_R2D_C_P<6> - @mlb_noldo_lib.MLB_NOLDO	6B6 13B3
	PEG_R2D_C_P6_SPN - @mlb_noldo_lib.MLB_NOLDO	6B5
PEG_R2D_C_P<7>	PEG_R2D_C_P<7> - @mlb_noldo_lib.MLB_NOLDO	6B6 13B3
	PEG_R2D_C_P7_SPN - @mlb_noldo_lib.MLB_NOLDO	6B5
PEG_R2D_C_P<8>	PEG_R2D_C_P<8> - @mlb_noldo_lib.MLB_NOLDO	6B6 13B3
	PEG_R2D_C_P8_SPN - @mlb_noldo_lib.MLB_NOLDO	6B5
PEG_R2D_C_P<9>	PEG_R2D_C_P<9> - @mlb_noldo_lib.MLB_NOLDO	6B6 13B3
	PEG_R2D_C_P9_SPN - @mlb_noldo_lib.MLB_NOLDO	6B5
PEG_R2D_C_P<10>	PEG_R2D_C_P<10> - @mlb_noldo_lib.MLB_NOLDO	6B6 13B3
	PEG_R2D_C_P10_SPN - @mlb_noldo_lib.MLB_NOLDO	6B5
PEG_R2D_C_P<11>	PEG_R2D_C_P<11> - @mlb_noldo_lib.MLB_NOLDO	6B6 13B3
	PEG_R2D_C_P11_SPN - @mlb_noldo_lib.MLB_NOLDO	6B5
PEG_R2D_C_P<12>	PEG_R2D_C_P<12> - @mlb_noldo_lib.MLB_NOLDO	6B6 13A3
	PEG_R2D_C_P12_SPN - @mlb_noldo_lib.MLB_NOLDO	6B5
PEG_R2D_C_P<13>	PEG_R2D_C_P<13> - @mlb_noldo_lib.MLB_NOLDO	6B6 13A3
	PEG_R2D_C_P13_SPN - @mlb_noldo_lib.MLB_NOLDO	6B5
PEG_R2D_C_P<14>	PEG_R2D_C_P<14> - @mlb_noldo_lib.MLB_NOLDO	6B6 13A3
	PEG_R2D_C_P14_SPN - @mlb_noldo_lib.MLB_NOLDO	6B5
PEG_R2D_C_P<15>	PEG_R2D_C_P<15> - @mlb_noldo_lib.MLB_NOLDO	6B6 13A3
	PEG_R2D_C_P15_SPN - @mlb_noldo_lib.MLB_NOLDO	6B5
PLT_RST_BUF_L	PLT_RST_BUF_L - @mlb_noldo_lib.MLB_NOLDO	26B3
PLT_RST_GATED_L	PLT_RST_GATED_L - @mlb_noldo_lib.MLB_NOLDO	26A3
PLT_RST_L	PLT_RST_L - @mlb_noldo_lib.MLB_NOLDO	22A6 26C3
	NB_RST_IN_L - @mlb_noldo_lib.MLB_NOLDO	14B7 26C1
PM_BATLOW_L	PM_BATLOW_L - @mlb_noldo_lib.MLB_NOLDO	23C1 45B8
PM_BMBUSY_L	PM_BMBUSY_L - @mlb_noldo_lib.MLB_NOLDO	14B6 23C5

PM_CLKRUN_L	PM_CLKRUN_L - @mlb_noldo_lib.MLB_NOLDO	5C2 23C8 38A5 45D5 47C6 53C6
PM_DPRSLPVR	PM_DPRSLPVR - @mlb_noldo_lib.MLB_NOLDO	14B7 23C3 58D8
PM_DPRSLPVR_R	PM_DPRSLPVR_R - @mlb_noldo_lib.MLB_NOLDO	14B6
PM_EXTTS_L<0>	PM_EXTTS_L<0> - @mlb_noldo_lib.MLB_NOLDO	6B2 14B7 45B8
	DIMM_OVERTEMP_L - @mlb_noldo_lib.MLB_NOLDO	6B1 28C4 29C4
PM_LAN_ENABLE	PM_LAN_ENABLE - @mlb_noldo_lib.MLB_NOLDO	23C3 45D8
PM_PWRBTN_L	PM_PWRBTN_L - @mlb_noldo_lib.MLB_NOLDO	23C3 45D8
PM_RI_L	PM_RI_L - @mlb_noldo_lib.MLB_NOLDO	23D5
PM_RSMRST_L	PM_RSMRST_L - @mlb_noldo_lib.MLB_NOLDO	23C1 45D8
PM_SB_PWROK	PM_SB_PWROK - @mlb_noldo_lib.MLB_NOLDO	23C3 26A6
PM_SLP_S3	PM_SLP_S3 - @mlb_noldo_lib.MLB_NOLDO	48C8 63B7
PM_SLP_S3BATT	PM_SLP_S3BATT - @mlb_noldo_lib.MLB_NOLDO	60C7
PM_SLP_S3_L	PM_SLP_S3_L - @mlb_noldo_lib.MLB_NOLDO	23C3 45C5 63A7 63A7 63B8
PM_SLP_S3_LS12V6	PM_SLP_S3_LS12V6 - @mlb_noldo_lib.MLB_NOLDO	63B7
PM_SLP_S4_L	PM_SLP_S4_L - @mlb_noldo_lib.MLB_NOLDO	23C3 45C5 60C8 61B8 63D6
PM_SLP_S5_L	PM_SLP_S5_L - @mlb_noldo_lib.MLB_NOLDO	23C3 45C5 46D3
PM_STPCPU_L	PM_STPCPU_L - @mlb_noldo_lib.MLB_NOLDO	23C8 32C4
PM_STPPCI_L	PM_STPPCI_L - @mlb_noldo_lib.MLB_NOLDO	23C8 32C4
PM_SUS_STAT_L	PM_SUS_STAT_L - @mlb_noldo_lib.MLB_NOLDO	5C2 23C5 45D5 46D3 47C5 53C6
PM_SYSRST_L	PM_SYSRST_L - @mlb_noldo_lib.MLB_NOLDO	23C5 26C5 45C8
	XDP_DBRESET_L_R - @mlb_noldo_lib.MLB_NOLDO	26C6
PM_THRMTRIP_L	PM_THRMTRIP_L - @mlb_noldo_lib.MLB_NOLDO	7C6 14B6 21C2 46B3
PM_THRM_L	PM_THRM_L - @mlb_noldo_lib.MLB_NOLDO	23C8 45B8
PP0V9_S0	PP0V9_S0 - @mlb_noldo_lib.MLB_NOLDO	5A2 64D7
	=PP0V9_S0_MEM_TERM - @mlb_noldo_lib.MLB_NOLDO	30D4 64D6
	=PP0V9_S0_MEM_REG - @mlb_noldo_lib.MLB_NOLDO	31B3 63B2 64D8
	=PP0V9_S0_MEM_TERM - @mlb_noldo_lib.MLB_NOLDO	30D4 64D6
	=PP0V9_S0_MEM_REG - @mlb_noldo_lib.MLB_NOLDO	31B3 63B2 64D8
PP1V2_S0	PP1V2_S0 - @mlb_noldo_lib.MLB_NOLDO	63B4
PP1V2_S3	PP1V2_S3 - @mlb_noldo_lib.MLB_NOLDO	5A2 64C4
	=PP1V2_S3_REG - @mlb_noldo_lib.MLB_NOLDO	60B2 63B5 64C6
	=PP1V2_S3_ENET - @mlb_noldo_lib.MLB_NOLDO	36A8 36D7 64C3
	=PP1V2_S3_REG - @mlb_noldo_lib.MLB_NOLDO	60B2 63B5 64C6
	=PP1V2_S3_ENET - @mlb_noldo_lib.MLB_NOLDO	36A8 36D7 64C3
PP1V5_S0_DPLL	PP1V5_S0_DPLL - @mlb_noldo_lib.MLB_NOLDO	19D5
PP1V5_S0_NB_3GPLL_F	PP1V5_S0_NB_3GPLL_F - @mlb_noldo_lib.MLB_NOLDO	19A4
PP1V5_S0_NB_QTVDAC	PP1V5_S0_NB_QTVDAC - @mlb_noldo_lib.MLB_NOLDO	19A7
PP1V5_S0_NB_VCC3G	PP1V5_S0_NB_VCC3G - @mlb_noldo_lib.MLB_NOLDO	17D6 19B2
PP1V5_S0_NB_VCCA_3GP LL	PP1V5_S0_NB_VCCA_3GPLL - @mlb_noldo_lib.MLB_NOLDO	17D6 19A2
PP1V5_S0_NB_VCCA_DPL ACA	PP1V5_S0_NB_VCCA_DPLLA - @mlb_noldo_lib.MLB_NOLDO	17C6 19D4
PP1V5_S0_NB_VCCA_DPL LB	PP1V5_S0_NB_VCCA_DPLLB - @mlb_noldo_lib.MLB_NOLDO	17C6 19D4
PP1V5_S0_NB_VCCA_HPL L	PP1V5_S0_NB_VCCA_HPLL - @mlb_noldo_lib.MLB_NOLDO	17C6 19C4
PP1V5_S0_NB_VCCA_MPL L	PP1V5_S0_NB_VCCA_MPLL - @mlb_noldo_lib.MLB_NOLDO	17C6 19C4
PP1V5_S0_NB_VCCD_QTV DAC	PP1V5_S0_NB_VCCD_QTVDAC - @mlb_noldo_lib.MLB_NOLDO	17B6 19A5
PP1V5_S0_NB_VCCD_TVD AC	PP1V5_S0_NB_VCCD_TVDAC - @mlb_noldo_lib.MLB_NOLDO	17C6 19A5
PP1V5_S0_REG_P	PP1V5_S0_REG_P - @mlb_noldo_lib.MLB_NOLDO	62B8
PP1V5_S0_SB_VCC1_5_B	PP1V5_S0_SB_VCC1_5_B - @mlb_noldo_lib.MLB_NOLDO	22C1 24D5 25B6
PP1V5_S0_SB_VCCDMIPL L	PP1V5_S0_SB_VCCDMIPLL - @mlb_noldo_lib.MLB_NOLDO	24B5 25A5
PP1V5_S0_SB_VCCDMIPL L_F	PP1V5_S0_SB_VCCDMIPLL_F - @mlb_noldo_lib.MLB_NOLDO	25A7
PP1V8_S0	PP1V8_S0 - @mlb_noldo_lib.MLB_NOLDO	5B2 64C7
	=PP1V8_S0_TMDS - @mlb_noldo_lib.MLB_NOLDO	64B6 68D6 68D6
	=PP1V8_S0_FET - @mlb_noldo_lib.MLB_NOLDO	63B3 64B8
	=PP1V8_S0_TMDS - @mlb_noldo_lib.MLB_NOLDO	64B6 68D6 68D6
	=PP1V8_S0_FET - @mlb_noldo_lib.MLB_NOLDO	63B3 64B8
PP1V8_S0_ANALOG_SDVO _F	PP1V8_S0_ANALOG_SDVO_F - @mlb_noldo_lib.MLB_NOLDO	68C4 68D3
PP1V8_S0_TMDS_F	PP1V8_S0_TMDS_F - @mlb_noldo_lib.MLB_NOLDO	68B4 68D3
PP1V8_S3	PP1V8_S3 - @mlb_noldo_lib.MLB_NOLDO	5A2 64C4
	=PP1V8_S3_1V2S3 - @mlb_noldo_lib.MLB_NOLDO	60B5 64C3
	=PP1V8_S3_MEM_NB_SENSE - @mlb_noldo_lib.MLB_NOLDO	61C4 64C3
	=PP1V8_S3_MEMVTT - @mlb_noldo_lib.MLB_NOLDO	31C6 64C3
	=PP1V8_S3_P1V8S0 - @mlb_noldo_lib.MLB_NOLDO	63A5 64C3
	=PP1V8_S3_REG - @mlb_noldo_lib.MLB_NOLDO	61B1 64C6
	=PP1V8_S3_MEM - @mlb_noldo_lib.MLB_NOLDO	19C7 19C8 28B2 28D4 28D6 29B2 29D4 29D6 64C3
	=PP1V8_S3_REG - @mlb_noldo_lib.MLB_NOLDO	61B1 64C6
	=PP1V8_S3_P1V8S0 - @mlb_noldo_lib.MLB_NOLDO	63A5 64C3

	=PP1V8_S3_MEM_NB_SENSE - @mlb_noldo_lib.MLB_NOLDO	61C4 64C3
	=PP1V8_S3_MEMVTT - @mlb_noldo_lib.MLB_NOLDO	31C6 64C3
	=PP1V8_S3_MEM - @mlb_noldo_lib.MLB_NOLDO	19C7 19C8 28B2 28D4 28D6 29B2 29D4 29D6 64C3
	=PP1V8_S3_1V2S3 - @mlb_noldo_lib.MLB_NOLDO	60B5 64C3
PP1V8_S3_MEMVTT_VDDQ	PP1V8_S3_MEMVTT_VDDQ - @mlb_noldo_lib.MLB_NOLDO	31C5
PP1V8_S3_R	PP1V8_S3_R - @mlb_noldo_lib.MLB_NOLDO	61B2
PP2V5_S0_NB_CRTDAC_F	PP2V5_S0_NB_CRTDAC_F - @mlb_noldo_lib.MLB_NOLDO	19D3
PP2V5_S0_NB_CRTDAC_F OLLOW	PP2V5_S0_NB_CRTDAC_FOLLOW - @mlb_noldo_lib.MLB_NOLDO	19D3
PP2V5_S0_NB_VCCA_CRT DAC	PP2V5_S0_NB_VCCA_CRTDAC - @mlb_noldo_lib.MLB_NOLDO	17D6 19D1
PP2V5_S3	PP2V5_S3 - @mlb_noldo_lib.MLB_NOLDO	5A2 64C4
	=PP2V5_S3_REG - @mlb_noldo_lib.MLB_NOLDO	60C2 64C6
	=PP2V5_S3_ENET - @mlb_noldo_lib.MLB_NOLDO	36D3 64C3
	=PP2V5_S3_REG - @mlb_noldo_lib.MLB_NOLDO	60C2 64C6
	=PP2V5_S3_ENET - @mlb_noldo_lib.MLB_NOLDO	36D3 64C3
PP2V5_S3_ENET_AVDD	PP2V5_S3_ENET_AVDD - @mlb_noldo_lib.MLB_NOLDO	36D5 37D8
PP2V5_S3_ENET_AVDD_F	PP2V5_S3_ENET_AVDD_F - @mlb_noldo_lib.MLB_NOLDO	37D7
PP3V3_AUDIO_CODEC	PP3V3_AUDIO_CODEC - @mlb_noldo_lib.MLB_NOLDO	54D6
PP3V3_AVREF_SMC	PP3V3_AVREF_SMC - @mlb_noldo_lib.MLB_NOLDO	45D2 46C6
PP3V3_G3C_SB_RTC_D	PP3V3_G3C_SB_RTC_D - @mlb_noldo_lib.MLB_NOLDO	26D4
	PP3V3_S5_SB_RTC - @mlb_noldo_lib.MLB_NOLDO	21D6 24B3 25A4 26D3
PP3V3_LCDVDD_SW	PP3V3_LCDVDD_SW - @mlb_noldo_lib.MLB_NOLDO	67C5
PP3V3_LCDVDD_SW_F	PP3V3_LCDVDD_SW_F - @mlb_noldo_lib.MLB_NOLDO	67B2
PP3V3_S0_ANALOG_SDVO _F	PP3V3_S0_ANALOG_SDVO_F - @mlb_noldo_lib.MLB_NOLDO	68C4 68D6
PP3V3_S0_ANALOG_TMDS _F	PP3V3_S0_ANALOG_TMDS_F - @mlb_noldo_lib.MLB_NOLDO	68B1 68B4 68D6
PP3V3_S0_AUDIO_F	PP3V3_S0_AUDIO_F - @mlb_noldo_lib.MLB_NOLDO	57B3 57C8 57C8 57D8
PP3V3_S0_AUDIO_SPDIF	PP3V3_S0_AUDIO_SPDIF - @mlb_noldo_lib.MLB_NOLDO	56B8 56D8
PP3V3_S0_CK410_VDD48	PP3V3_S0_CK410_VDD48 - @mlb_noldo_lib.MLB_NOLDO	32D5
PP3V3_S0_CK410_VDDA	PP3V3_S0_CK410_VDDA - @mlb_noldo_lib.MLB_NOLDO	32C7
PP3V3_S0_CK410_VDD_C PU_SRC	PP3V3_S0_CK410_VDD_CPU_SRC - @mlb_noldo_lib.MLB_NOLDO	32D6
PP3V3_S0_CK410_VDD_P CI	PP3V3_S0_CK410_VDD_PCI - @mlb_noldo_lib.MLB_NOLDO	32D5
PP3V3_S0_CK410_VDD_R EF	PP3V3_S0_CK410_VDD_REF - @mlb_noldo_lib.MLB_NOLDO	32C5
PP3V3_S0_IMVP6_3V3	PP3V3_S0_IMVP6_3V3 - @mlb_noldo_lib.MLB_NOLDO	58D7
PP3V3_S0_LCD_F	PP3V3_S0_LCD_F - @mlb_noldo_lib.MLB_NOLDO	67B3
PP3V3_S0_NB_TVDAC	PP3V3_S0_NB_TVDAC - @mlb_noldo_lib.MLB_NOLDO	19C3
PP3V3_S0_NB_TVDAC_F	PP3V3_S0_NB_TVDAC_F - @mlb_noldo_lib.MLB_NOLDO	19C2
PP3V3_S0_NB_TVDAC_FO LLOW	PP3V3_S0_NB_TVDAC_FOLLOW - @mlb_noldo_lib.MLB_NOLDO	19C3
PP3V3_S0_NB_VCCA_TVB G	PP3V3_S0_NB_VCCA_TVBG - @mlb_noldo_lib.MLB_NOLDO	17C6 19B1
PP3V3_S0_NB_VCCA_TVD ACA	PP3V3_S0_NB_VCCA_TVDACA - @mlb_noldo_lib.MLB_NOLDO	17C6 19C1
PP3V3_S0_NB_VCCA_TVD ACB	PP3V3_S0_NB_VCCA_TVDACB - @mlb_noldo_lib.MLB_NOLDO	17C6 19B1
PP3V3_S0_NB_VCCA_TVD ACC	PP3V3_S0_NB_VCCA_TVDACC - @mlb_noldo_lib.MLB_NOLDO	17C6 19B1
PP3V3_S0_PVCC1_TMDS_ F	PP3V3_S0_PVCC1_TMDS_F - @mlb_noldo_lib.MLB_NOLDO	68C4 68C6
PP3V3_S0_PVCC2_TMDS_ F	PP3V3_S0_PVCC2_TMDS_F - @mlb_noldo_lib.MLB_NOLDO	68C4 68C7
PP3V3_S0_TPM_3VSB	PP3V3_S0_TPM_3VSB - @mlb_noldo_lib.MLB_NOLDO	53C4
PP3V3_S3	PP3V3_S3 - @mlb_noldo_lib.MLB_NOLDO	5A2 64B4
	=PP3V3_S3_PDCISENS - @mlb_noldo_lib.MLB_NOLDO	61C1 64B3
	=PP3V3_S3_FW - @mlb_noldo_lib.MLB_NOLDO	38D5 64B3
	=PP3V3_S3_AIRPORT_AUX - @mlb_noldo_lib.MLB_NOLDO	43C3 64B3
	=PP3V3_S3_RSTGATE - @mlb_noldo_lib.MLB_NOLDO	26B3 64B3
	=PP3V3_S3_PCI - @mlb_noldo_lib.MLB_NOLDO	38C5 64B3
	=PP3V3_S3_SMS - @mlb_noldo_lib.MLB_NOLDO	46D5 52C7 64B3
	=PP3V3_S3_TPM - @mlb_noldo_lib.MLB_NOLDO	46D5 53C2 64B3
	=PP3V3_S3_2V5S3 - @mlb_noldo_lib.MLB_NOLDO	60C4 60D6 64B3
	=PP3V3_S3_ENET - @mlb_noldo_lib.MLB_NOLDO	36A5 36B4 36B5 36C8 36D6 36D8 64B3
	=PP3V3_S3_BT - @mlb_noldo_lib.MLB_NOLDO	44C6 64B3
	=PP3V3_S3_FET - @mlb_noldo_lib.MLB_NOLDO	63D3 64B6
	=PP3V3_S3_SMBUS_SMC_RMT - @mlb_noldo_lib.MLB_NOLDO	27D3 64B3
	=PP3V3_S3_TPM - @mlb_noldo_lib.MLB_NOLDO	46D5 53C2 64B3
	=PP3V3_S3_SMS - @mlb_noldo_lib.MLB_NOLDO	46D5 52C7 64B3
	=PP3V3_S3_SMBUS_SMC_RMT - @mlb_noldo_lib.MLB_NOLDO	27D3 64B3
	=PP3V3_S3_RSTGATE - @mlb_noldo_lib.MLB_NOLDO	26B3 64B3
	=PP3V3_S3_PDCISENS - @mlb_noldo_lib.MLB_NOLDO	61C1 64B3
	=PP3V3_S3_PCI - @mlb_noldo_lib.MLB_NOLDO	38C5 64B3
	=PP3V3_S3_FW - @mlb_noldo_lib.MLB_NOLDO	38D5 64B3

	=PP3V3_S3_FET -	63D3 64B6
	@mlb_noldo_lib.MLB_NOLDO	
	=PP3V3_S3_ENET -	36A5 36B4 36B5 36C8 36D6
	@mlb_noldo_lib.MLB_NOLDO	36D8 64B3
	=PP3V3_S3_BT -	44C6 64B3
	@mlb_noldo_lib.MLB_NOLDO	
	=PP3V3_S3_AIRPORT_AUX -	43C3 64B3
	@mlb_noldo_lib.MLB_NOLDO	
	=PP3V3_S3_2VSS3 -	60C4 60D6 64B3
	@mlb_noldo_lib.MLB_NOLDO	
PP3V3_S3_AIRPORT_AUX_CONN	PP3V3_S3_AIRPORT_AUX_CONN -	43C4
	@mlb_noldo_lib.MLB_NOLDO	
PP3V3_S3_BT_F	PP3V3_S3_BT_F -	44C4
	@mlb_noldo_lib.MLB_NOLDO	
PP3V3_S3_FW_AVDD	PP3V3_S3_FW_AVDD -	38D3
	@mlb_noldo_lib.MLB_NOLDO	
PP3V3_S3_ST_ACCEL	PP3V3_S3_ST_ACCEL -	52B6
	@mlb_noldo_lib.MLB_NOLDO	
PP3V3_S5	PP3V3_S5 - @mlb_noldo_lib.MLB_NOLDO	5A2 64A4
	=PP3V3_S5_LCD -	64A3 67C7
	@mlb_noldo_lib.MLB_NOLDO	
	=PP3V3_S5_FWLATEVG -	39A8 64A3
	@mlb_noldo_lib.MLB_NOLDO	
	=PP3V3_S5_P3V3S3 -	63D5 64A3
	@mlb_noldo_lib.MLB_NOLDO	
	=PP3V3_S5_P3V3S0 -	63C5 64A3
	@mlb_noldo_lib.MLB_NOLDO	
	=PP3V3_S5_ROM -	50D4 64A3
	@mlb_noldo_lib.MLB_NOLDO	
	=PP3V3_S5_SB_3V3_1V5_VCCSUSHDA -	24C3 64A3
	@mlb_noldo_lib.MLB_NOLDO	
	=PP3V3_S5_SB_IO -	22C6 64A3
	@mlb_noldo_lib.MLB_NOLDO	
	=PP3V3_S5_SB_VCCSUS3_3_USB -	24B3 25D2 64A3
	@mlb_noldo_lib.MLB_NOLDO	
	=PP3V3_S5_SB_PM -	11B5 23D1 26C5 64A3
	@mlb_noldo_lib.MLB_NOLDO	
	=PP3V3_S5_SB_VCCSUS3_3 -	24A5 24B3 25B6 25D2 64A3
	@mlb_noldo_lib.MLB_NOLDO	
	=PP3V3_S5_REG -	59B8 64A6
	@mlb_noldo_lib.MLB_NOLDO	
	=PP3V3_S5_SB -	23A7 23B7 23D4 23D8 25C8
	@mlb_noldo_lib.MLB_NOLDO	64A3
	=PP3V3_S5_SB_USB -	22D8 64A3
	@mlb_noldo_lib.MLB_NOLDO	
	=PP3V3_S5_SB_VCCSUS3_3_USB -	24B3 25D2 64A3
	@mlb_noldo_lib.MLB_NOLDO	
	=PP3V3_S5_SB_VCCSUS3_3 -	24A5 24B3 25B6 25D2 64A3
	@mlb_noldo_lib.MLB_NOLDO	
	=PP3V3_S5_SB_USB -	22D8 64A3
	@mlb_noldo_lib.MLB_NOLDO	
	=PP3V3_S5_SB_PM -	11B5 23D1 26C5 64A3
	@mlb_noldo_lib.MLB_NOLDO	
	=PP3V3_S5_SB_IO -	22C6 64A3
	@mlb_noldo_lib.MLB_NOLDO	
	=PP3V3_S5_SB_3V3_1V5_VCCSUSHDA -	24C3 64A3
	@mlb_noldo_lib.MLB_NOLDO	
	=PP3V3_S5_SB -	23A7 23B7 23D4 23D8 25C8
	@mlb_noldo_lib.MLB_NOLDO	64A3
	=PP3V3_S5_ROM -	50D4 64A3
	@mlb_noldo_lib.MLB_NOLDO	
	=PP3V3_S5_REG -	59B8 64A6
	@mlb_noldo_lib.MLB_NOLDO	
	=PP3V3_S5_P3V3S3 -	63D5 64A3
	@mlb_noldo_lib.MLB_NOLDO	
	=PP3V3_S5_P3V3S0 -	63C5 64A3
	@mlb_noldo_lib.MLB_NOLDO	
	=PP3V3_S5_LCD -	64A3 67C7
	@mlb_noldo_lib.MLB_NOLDO	
	=PP3V3_S5_FWLATEVG -	39A8 64A3
	@mlb_noldo_lib.MLB_NOLDO	
PP3V3_S5_FWLATEVG	PP3V3_S5_FWLATEVG -	39A6 39B5
	@mlb_noldo_lib.MLB_NOLDO	
PP3V3_S5_FWLATEVG_F	PP3V3_S5_FWLATEVG_F -	39A7
	@mlb_noldo_lib.MLB_NOLDO	
PP3V3_S5_REG_P	PP3V3_S5_REG_P -	59B8
	@mlb_noldo_lib.MLB_NOLDO	
PP3V42G3H_SW	PP3V42G3H_SW -	63D2
	@mlb_noldo_lib.MLB_NOLDO	
PP3V42_G3H_LIDSWITCH_F	PP3V42_G3H_LIDSWITCH_F -	65A7
	@mlb_noldo_lib.MLB_NOLDO	
PP3V42_G3H_SMC_CLK_F	PP3V42_G3H_SMC_CLK_F -	46A7
	@mlb_noldo_lib.MLB_NOLDO	
PP3V42_ONEWIRE	PP3V42_ONEWIRE -	65C7
	@mlb_noldo_lib.MLB_NOLDO	
PP4V5_AUDIO_ANALOG	PP4V5_AUDIO_ANALOG -	54A3 54D2 57C3 57C5
	@mlb_noldo_lib.MLB_NOLDO	
PP5V_INV	PP5V_INV - @mlb_noldo_lib.MLB_NOLDO	67D5
PP5V_INV_F	PP5V_INV_F -	5B1 67D3
	@mlb_noldo_lib.MLB_NOLDO	
PP5V_S0_AUDIO	PP5V_S0_AUDIO -	5D1
	@mlb_noldo_lib.MLB_NOLDO	
PP5V_S0_AUDIO_F	PP5V_S0_AUDIO_F -	55B8 55B8 55C4
	@mlb_noldo_lib.MLB_NOLDO	
PP5V_S0_AUDIO_PWR	PP5V_S0_AUDIO_PWR -	5D1
	@mlb_noldo_lib.MLB_NOLDO	
PP5V_S0_DVIPORT	PP5V_S0_DVIPORT -	68A6 69B4 69C3
	@mlb_noldo_lib.MLB_NOLDO	
PP5V_S0_DVIPORT_D	PP5V_S0_DVIPORT_D -	68A8 69C5
	@mlb_noldo_lib.MLB_NOLDO	
PP5V_S0_IMVP6_VDD	PP5V_S0_IMVP6_VDD -	58D7
	@mlb_noldo_lib.MLB_NOLDO	
PP5V_S0_SB_V5REF	PP5V_S0_SB_V5REF -	24D5 25D7
	@mlb_noldo_lib.MLB_NOLDO	
PP5V_S0_TMDS_FUSE	PP5V_S0_TMDS_FUSE -	69C5
	@mlb_noldo_lib.MLB_NOLDO	
PP5V_S3	PP5V_S3 - @mlb_noldo_lib.MLB_NOLDO	5A2 64B4
	=PP5V_S3_IR -	41D6 64B3
	@mlb_noldo_lib.MLB_NOLDO	
	=PP5V_S3_GEYSER -	40D6 64B3
	@mlb_noldo_lib.MLB_NOLDO	
	=PP5V_S3_CAMERA -	64B3 67A5
	@mlb_noldo_lib.MLB_NOLDO	
	=PP5V_S3_FET -	63D3 64B6
	@mlb_noldo_lib.MLB_NOLDO	
	=PP5V_S3_SYSLED -	35B6 46B4 64B3
	@mlb_noldo_lib.MLB_NOLDO	
	=PP5V_S3_IR -	41D6 64B3
	@mlb_noldo_lib.MLB_NOLDO	
	=PP5V_S3_GEYSER -	40D6 64B3
	@mlb_noldo_lib.MLB_NOLDO	
	=PP5V_S3_FET -	63D3 64B6
	@mlb_noldo_lib.MLB_NOLDO	
	=PP5V_S3_CAMERA -	64B3 67A5

	@mlb_noldo_lib.MLB_NOLDO	
PP5V_S3_CAMERA_F	PP5V_S3_CAMERA_F -	67A3
	@mlb_noldo_lib.MLB_NOLDO	
PP5V_S3_GEYSER_F	PP5V_S3_GEYSER_F -	40D5
	@mlb_noldo_lib.MLB_NOLDO	
PP5V_S3_SYSLED_F	PP5V_S3_SYSLED_F -	35B8
	@mlb_noldo_lib.MLB_NOLDO	
PP5V_S3_USB2_EXTA	PP5V_S3_USB2_EXTA -	42C7
	@mlb_noldo_lib.MLB_NOLDO	
PP5V_S3_USB2_EXTA_F	PP5V_S3_USB2_EXTA_F -	42D2 42D3
	@mlb_noldo_lib.MLB_NOLDO	
PP5V_S3_USB2_EXTB	PP5V_S3_USB2_EXTB -	42C7
	@mlb_noldo_lib.MLB_NOLDO	
PP5V_S3_USB2_EXTB_F	PP5V_S3_USB2_EXTB_F -	42B2 42C3
	@mlb_noldo_lib.MLB_NOLDO	
PP5V_S5	PP5V_S5 - @mlb_noldo_lib.MLB_NOLDO	5A2 64A4
	=PP5V_S5_1V8S3 -	61C7 64A3
	@mlb_noldo_lib.MLB_NOLDO	
	=PP5V_S5_PATA -	34D6 64A3
	@mlb_noldo_lib.MLB_NOLDO	
	=PP5V_S5_USB -	42C8 64A3
	@mlb_noldo_lib.MLB_NOLDO	
	=PP5V_S5_P5VS0 -	63C5 64A3
	@mlb_noldo_lib.MLB_NOLDO	
	=PP5V_S5_PWRCTL -	63A7 63D6 64A3
	@mlb_noldo_lib.MLB_NOLDO	
	=PP5V_S5_REG -	59B1 64A6
	@mlb_noldo_lib.MLB_NOLDO	
	=PP5V_S5_P5VS3 -	63D5 64A3
	@mlb_noldo_lib.MLB_NOLDO	
	=PP5V_S5_SB -	25C8 64A3
	@mlb_noldo_lib.MLB_NOLDO	
	=PP5V_S5_USB -	42C8 64A3
	@mlb_noldo_lib.MLB_NOLDO	
	=PP5V_S5_SB -	25C8 64A3
	@mlb_noldo_lib.MLB_NOLDO	
	=PP5V_S5_REG -	59B1 64A6
	@mlb_noldo_lib.MLB_NOLDO	
	=PP5V_S5_PWRCTL -	63A7 63D6 64A3
	@mlb_noldo_lib.MLB_NOLDO	
	=PP5V_S5_PATA -	34D6 64A3
	@mlb_noldo_lib.MLB_NOLDO	
	=PP5V_S5_P5VS3 -	63D5 64A3
	@mlb_noldo_lib.MLB_NOLDO	
	=PP5V_S5_P5VS0 -	63C5 64A3
	@mlb_noldo_lib.MLB_NOLDO	
	=PP5V_S5_1V8S3 -	61C7 64A3
	@mlb_noldo_lib.MLB_NOLDO	
PP5V_S5_1V51V05S0_IN	PP5V_S5_1V51V05S0_INTVCC -	62A2 62C3 62C6
TVCC	@mlb_noldo_lib.MLB_NOLDO	
PP5V_S5_5V3V3S5_INTV	PP5V_S5_5V3V3S5_INTVCC -	59A2 59C3 59C6
CC	@mlb_noldo_lib.MLB_NOLDO	
PP5V_S5_REG_P	PP5V_S5_REG_P -	59A6 59B1
	@mlb_noldo_lib.MLB_NOLDO	
PP5V_S5_SB_V5REF_SUS	PP5V_S5_SB_V5REF_SUS -	24D5 25C7
	@mlb_noldo_lib.MLB_NOLDO	
PP18V5_DCIN	PP18V5_DCIN -	65D4
	@mlb_noldo_lib.MLB_NOLDO	
PP18V5_DCIN_F	PP18V5_DCIN_F -	65D7
	@mlb_noldo_lib.MLB_NOLDO	
PP18V5_DCIN_ONEWIRE	PP18V5_DCIN_ONEWIRE -	65C6
	@mlb_noldo_lib.MLB_NOLDO	
PP18V5_G3H	PP18V5_G3H -	5A2 64C1
	@mlb_noldo_lib.MLB_NOLDO	
	=PP18V5_G3H_INRUSH -	64C3 65D1
	@mlb_noldo_lib.MLB_NOLDO	
	=PP18V5_G3H_CHGR -	64C1 66D8
	@mlb_noldo_lib.MLB_NOLDO	
	=PP18V5_G3H_INRUSH -	64C3 65D1
	@mlb_noldo_lib.MLB_NOLDO	
	=PP18V5_G3H_CHGR -	64C1 66D8
	@mlb_noldo_lib.MLB_NOLDO	
PP18V5_S5_CHGR_SW_R	PP18V5_S5_CHGR_SW_R -	66C4
	@mlb_noldo_lib.MLB_NOLDO	
PPBUSA_G3H	PPBUSA_G3H -	5A2
	@mlb_noldo_lib.MLB_NOLDO	
PPBUSB_G3H	PPBUSB_G3H -	5A2 64C1
	@mlb_noldo_lib.MLB_NOLDO	
	=PPBUS_S5_YUKON_CTRL -	60C8 64C1
	@mlb_noldo_lib.MLB_NOLDO	
	=PPVIN_S5_IMVP6 -	48C7 58C2 58D5 58D8 64C1
	@mlb_noldo_lib.MLB_NOLDO	
	=PPVIN_S5_1V51V05S0 -	62D8 64C1
	@mlb_noldo_lib.MLB_NOLDO	
	=PPBUSB_G3H -	64C3 66C2
	@mlb_noldo_lib.MLB_NOLDO	
	=PPBUS_S5_INV -	64C1 67D4
	@mlb_noldo_lib.MLB_NOLDO	
	=PPBUS_S5_FWPWRSW -	39D6 64C1
	@mlb_noldo_lib.MLB_NOLDO	
	=PPVIN_S5_5V3V3S5 -	59D8 63B7 64C1
	@mlb_noldo_lib.MLB_NOLDO	
	=PPVIN_S5_1V8S3 -	61C7 64C1
	@mlb_noldo_lib.MLB_NOLDO	
	=PPVIN_S5_1V51V05S0 -	62D8 64C1
	@mlb_noldo_lib.MLB_NOLDO	
	=PPBUS_S5_YUKON_CTRL -	60C8 64C1
	@mlb_noldo_lib.MLB_NOLDO	
	=PPBUS_S5_INV -	64C1 67D4
	@mlb_noldo_lib.MLB_NOLDO	
	=PPBUS_S5_FWPWRSW -	39D6 64C1
	@mlb_noldo_lib.MLB_NOLDO	
	=PPBUSB_G3H -	64C3 66C2
	@mlb_noldo_lib.MLB_NOLDO	
	=PPBUSA_G3H -	64C3 66C2
	@mlb_noldo_lib.MLB_NOLDO	
PPBUS_ALL_INV_CONN	PPBUS_ALL_INV_CONN -	5B1 67D3
	@mlb_noldo_lib.MLB_NOLDO	
PPBUS_S5_FWPWRSW_F	PPBUS_S5_FWPWRSW_F -	39D6
	@mlb_noldo_lib.MLB_NOLDO	
PPDCIN_G3H_R	PPDCIN_G3H_R -	65D4
	@mlb_noldo_lib.MLB_NOLDO	
PPFW_PORT0_VP	PPFW_PORT0_VP -	39C2
	@mlb_noldo_lib.MLB_NOLDO	
PPFW_PORT0_VP_F	PPFW_PORT0_VP_F -	39C3
	@mlb_noldo_lib.MLB_NOLDO	
PPFW_SWITCH	PPFW_SWITCH -	5B2 39D4
	@mlb_noldo_lib.MLB_NOLDO	

PPVBATT_G3C_RTC	PPVBATT_G3C_RTC -	26D6
	@mlb_noldo_lib.MLB_NOLDO	
PPVBATT_G3C_RTC_R	PPVBATT_G3C_RTC_R -	26D5
	@mlb_noldo_lib.MLB_NOLDO	
PPVBATT_G3H_PRE	PPVBATT_G3H_PRE -	66B3
	@mlb_noldo_lib.MLB_NOLDO	
PPVBATT_G3H_R	PPVBATT_G3H_R -	66B2
	@mlb_noldo_lib.MLB_NOLDO	
PPVBAT_G3H_CHGR_OUT	PPVBAT_G3H_CHGR_OUT -	5C1 66B5 66C2
	@mlb_noldo_lib.MLB_NOLDO	
PPVBAT_G3H_CHGR_REG	PPVBAT_G3H_CHGR_REG -	66C4
	@mlb_noldo_lib.MLB_NOLDO	
PPVCORE_CPU_S0	PPVCORE_CPU_S0 -	5B2 64D7
	@mlb_noldo_lib.MLB_NOLDO	
	=PPVCORE_S0_CPU -	8B5 8D7 9B8 48A5 48B3
	@mlb_noldo_lib.MLB_NOLDO	64D6
	=PPVOUT_S0_IMVP6_REG -	58D1 64D8
	@mlb_noldo_lib.MLB_NOLDO	
	=PPVCORE_S0_CPU -	8B5 8D7 9B8 48A5 48B3
	@mlb_noldo_lib.MLB_NOLDO	64D6
PPVDCIN_G3H_PRE	PPVDCIN_G3H_PRE -	66D4
	@mlb_noldo_lib.MLB_NOLDO	
PPVIN_S5_1V51V05S0_R	PPVIN_S5_1V51V05S0_R -	62C5
	@mlb_noldo_lib.MLB_NOLDO	
PPVIN_S5_5V3V3S5_R	PPVIN_S5_5V3V3S5_R -	59C5
	@mlb_noldo_lib.MLB_NOLDO	
PPVIN_S5_IMVP6_VIN	PPVIN_S5_IMVP6_VIN -	58D7
	@mlb_noldo_lib.MLB_NOLDO	
RSMRST_PWRGD	RSMRST_PWRGD -	45D8 46D6 59A1
	@mlb_noldo_lib.MLB_NOLDO	
	5V3V3S5_PGOOD -	59A2
	@mlb_noldo_lib.MLB_NOLDO	
S0PWRGD_0V9_DIV	S0PWRGD_0V9_DIV -	63B2
	@mlb_noldo_lib.MLB_NOLDO	
S0PWRGD_1V2_DIV	S0PWRGD_1V2_DIV -	63A2
	@mlb_noldo_lib.MLB_NOLDO	
S0PWRGD_OK	S0PWRGD_OK -	63B2
	@mlb_noldo_lib.MLB_NOLDO	
SATA_A_D2R_N	SATA_A_D2R_N -	6C4 21B6
	@mlb_noldo_lib.MLB_NOLDO	
	SATA_A_D2R_N_SPN -	6C3
	@mlb_noldo_lib.MLB_NOLDO	
SATA_A_D2R_P	SATA_A_D2R_P -	6C4 21B6
	@mlb_noldo_lib.MLB_NOLDO	
	SATA_A_D2R_P_SPN -	6C3
	@mlb_noldo_lib.MLB_NOLDO	
SATA_A_R2D_C_N	SATA_A_R2D_C_N -	6C4 21B6
	@mlb_noldo_lib.MLB_NOLDO	
	SATA_A_R2D_C_N_SPN -	6C3
	@mlb_noldo_lib.MLB_NOLDO	
SATA_A_R2D_C_P	SATA_A_R2D_C_P -	6C4 21B6
	@mlb_noldo_lib.MLB_NOLDO	
	SATA_A_R2D_C_P_SPN -	6C3
	@mlb_noldo_lib.MLB_NOLDO	
SATA_C_D2R_C_N	SATA_C_D2R_C_N -	35D7
	@mlb_noldo_lib.MLB_NOLDO	
SATA_C_D2R_C_P	SATA_C_D2R_C_P -	35C7
	@mlb_noldo_lib.MLB_NOLDO	
SATA_C_D2R_F_N	SATA_C_D2R_F_N -	35D5
	@mlb_noldo_lib.MLB_NOLDO	
SATA_C_D2R_F_P	SATA_C_D2R_F_P -	35C5
	@mlb_noldo_lib.MLB_NOLDO	
SATA_C_D2R_N	SATA_C_D2R_N -	21B6 35D4
	@mlb_noldo_lib.MLB_NOLDO	
SATA_C_D2R_P	SATA_C_D2R_P -	21B6 35C4
	@mlb_noldo_lib.MLB_NOLDO	
SATA_C_DET_L	SATA_C_DET_L -	23D2 35D2
	@mlb_noldo_lib.MLB_NOLDO	
SATA_C_PWR_EN_L	SATA_C_PWR_EN_L -	23A3 23B3
	@mlb_noldo_lib.MLB_NOLDO	
SATA_C_R2D_C_N	SATA_C_R2D_C_N -	21B6 35D4
	@mlb_noldo_lib.MLB_NOLDO	
SATA_C_R2D_C_P	SATA_C_R2D_C_P -	21B6 35D4
	@mlb_noldo_lib.MLB_NOLDO	
SATA_C_R2D_F_N	SATA_C_R2D_F_N -	35D6
	@mlb_noldo_lib.MLB_NOLDO	
SATA_C_R2D_F_P	SATA_C_R2D_F_P -	35D6
	@mlb_noldo_lib.MLB_NOLDO	
SATA_C_R2D_N	SATA_C_R2D_N -	35D7
	@mlb_noldo_lib.MLB_NOLDO	
SATA_C_R2D_P	SATA_C_R2D_P -	35D7
	@mlb_noldo_lib.MLB_NOLDO	
SATA_RBIAS_N	SATA_RBIAS_N -	21B6 35D2
	@mlb_noldo_lib.MLB_NOLDO	
	SATA_RBIAS_P -	21B6 35D2
	@mlb_noldo_lib.MLB_NOLDO	
	SATA_RBIAS_PN -	35D3
	@mlb_noldo_lib.MLB_NOLDO	
	SATA_RBIAS_P -	21B6 35D2
	@mlb_noldo_lib.MLB_NOLDO	
SB_A20GATE	SB_A20GATE -	21C4
	@mlb_noldo_lib.MLB_NOLDO	
SB_ACZ_BITCLK	SB_ACZ_BITCLK -	21C6
	@mlb_noldo_lib.MLB_NOLDO	
SB_ACZ_RST_L	SB_ACZ_RST_L -	21C6
	@mlb_noldo_lib.MLB_NOLDO	
SB_ACZ_SDATAOUT	SB_ACZ_SDATAOUT -	21C6
	@mlb_noldo_lib.MLB_NOLDO	
SB_ACZ_SYNC	SB_ACZ_SYNC -	21C6
	@mlb_noldo_lib.MLB_NOLDO	
SB_CLK14P3M_TIMER	SB_CLK14P3M_TIMER -	23D3 33A6
	@mlb_noldo_lib.MLB_NOLDO	
SB_CLK48M_USBCTLR	SB_CLK48M_USBCTLR -	23D3 33C7
	@mlb_noldo_lib.MLB_NOLDO	
SB_CLK100M_DMI_N	SB_CLK100M_DMI_N -	22C2 33B2 33C3
	@mlb_noldo_lib.MLB_NOLDO	
SB_CLK100M_DMI_P	SB_CLK100M_DMI_P -	22C2 33B2 33C3
	@mlb_noldo_lib.MLB_NOLDO	
SB_CLK100M_SATA_N	SB_CLK100M_SATA_N -	21B6 33B2 33B3
	@mlb_noldo_lib.MLB_NOLDO	
SB_CLK100M_SATA_OE_L	SB_CLK100M_SATA_OE_L -	23C3 32B4
	@mlb_noldo_lib.MLB_NOLDO	
SB_CLK100M_SATA_P	SB_CLK100M_SATA_P -	21B6 33B2 33B3
	@mlb_noldo_lib.MLB_NOLDO	
SB_GPIO2	SB_GPIO2 - @mlb_noldo_lib.MLB_NOLDO	22A6 26C3
SB_GPIO3	SB_GPIO3 - @mlb_noldo_lib.MLB_NOLDO	22A6 23A4 26C3
SB_GPIO4	SB_GPIO4 - @mlb_noldo_lib.MLB_NOLDO	22A6 26C3
SB_GPIO5	SB_GPIO5 - @mlb_noldo_lib.MLB_NOLDO	22A6 26C3 34C8
	ODD_PWR_EN_L -	34C8
	@mlb_noldo_lib.MLB_NOLDO	
SB_GPIO14	SB_GPIO14 -	23A4 23C3
	@mlb_noldo_lib.MLB_NOLDO	
SB_GPIO19	SB_GPIO19 -	23D3
	@mlb_noldo_lib.MLB_NOLDO	

SB_GPIO21	SB_GPIO21 -	23D3
	@mlb_noldo_lib.MLB_NOLDO	
SB_GPIO26	SB_GPIO26 -	23C8
	@mlb_noldo_lib.MLB_NOLDO	
SB_GPIO29	SB_GPIO29 -	22C4 22D8
	@mlb_noldo_lib.MLB_NOLDO	
SB_GPIO30	SB_GPIO30 -	22C4 22D8 36D8
	@mlb_noldo_lib.MLB_NOLDO	
SB_GPIO31	SB_GPIO31 -	22C4 22D8
	@mlb_noldo_lib.MLB_NOLDO	
SB_GPIO37	SB_GPIO37 -	23D3
	@mlb_noldo_lib.MLB_NOLDO	
SB_INTVRMEN	SB_INTVRMEN -	21D6
	@mlb_noldo_lib.MLB_NOLDO	
SB_RTC_RST_L	SB_RTC_RST_L -	21D6 26D4
	@mlb_noldo_lib.MLB_NOLDO	
SB_RTC_X1	SB_RTC_X1 -	21D6 26C8
	@mlb_noldo_lib.MLB_NOLDO	
SB_RTC_X1_R	SB_RTC_X1_R -	26C7
	@mlb_noldo_lib.MLB_NOLDO	
SB_RTC_X2	SB_RTC_X2 -	21D6 26C8
	@mlb_noldo_lib.MLB_NOLDO	
SB_RUNTIME_SCI_L	SB_RUNTIME_SCI_L -	23C5
	@mlb_noldo_lib.MLB_NOLDO	
SB_SM_INTRUDER_L	SB_SM_INTRUDER_L -	21D6 26D4
	@mlb_noldo_lib.MLB_NOLDO	
SB_SPKR	SB_SPKR - @mlb_noldo_lib.MLB_NOLDO	23C5
SC_RX_L	SC_RX_L - @mlb_noldo_lib.MLB_NOLDO	45C5 46B1
SC_TX_L	SC_TX_L - @mlb_noldo_lib.MLB_NOLDO	45C5 46B1
SDATAIN	SDATAIN - @mlb_noldo_lib.MLB_NOLDO	54C6
SDVO_CTRLCLK	SDVO_CTRLCLK -	14B6 68A6
	@mlb_noldo_lib.MLB_NOLDO	
SDVO_CTRLDATA	SDVO_CTRLDATA -	14B6 68A6
	@mlb_noldo_lib.MLB_NOLDO	
SMBUS_BATT_SCL_F	SMBUS_BATT_SCL_F -	5D1 65B6
	@mlb_noldo_lib.MLB_NOLDO	
SMBUS_BATT_SDA_F	SMBUS_BATT_SDA_F -	5D1 65A6
	@mlb_noldo_lib.MLB_NOLDO	
SMB_0_CLK	SMB_0_CLK -	27D6 45C8
	@mlb_noldo_lib.MLB_NOLDO	
	SMBUS_SMC_0_SCL -	27D5
	@mlb_noldo_lib.MLB_NOLDO	
	THRM_DIMM1_SMB_CLK -	27D3 49B4
	@mlb_noldo_lib.MLB_NOLDO	
	SMBUS_SMC_0_SCL -	27D5
	@mlb_noldo_lib.MLB_NOLDO	
SMB_0_DATA	SMB_0_DATA -	27D6 45C5
	@mlb_noldo_lib.MLB_NOLDO	
	SMBUS_SMC_0_SDA -	27D5
	@mlb_noldo_lib.MLB_NOLDO	
	THRM_DIMM1_SMB_DATA -	27C3 49B4
	@mlb_noldo_lib.MLB_NOLDO	
	SMBUS_SMC_0_SDA -	27D5
	@mlb_noldo_lib.MLB_NOLDO	
SMB_AIRPORT_CONN_CLK	SMB_AIRPORT_CONN_CLK -	43B5
	@mlb_noldo_lib.MLB_NOLDO	
SMB_AIRPORT_CONN_DAT	SMB_AIRPORT_CONN_DATA -	43B5
A	@mlb_noldo_lib.MLB_NOLDO	
SMB_ALERT_L	SMB_ALERT_L -	23C5
	@mlb_noldo_lib.MLB_NOLDO	
SMB_BSA_CLK	SMB_BSA_CLK -	27C3 45B5
	@mlb_noldo_lib.MLB_NOLDO	
	SMBUS_SMC_BSA_SCL -	27C2
	@mlb_noldo_lib.MLB_NOLDO	
	=SMBUS_BATT_SCL -	27C1 65A2
	@mlb_noldo_lib.MLB_NOLDO	
	SMBUS_SMC_BSA_SCL -	27C2
	@mlb_noldo_lib.MLB_NOLDO	
	=SMBUS_BATT_SCL -	27C1 65A2
	@mlb_noldo_lib.MLB_NOLDO	
SMB_BSA_DATA	SMB_BSA_DATA -	27C3 45B5
	@mlb_noldo_lib.MLB_NOLDO	
	SMBUS_SMC_BSA_SDA -	27C2
	@mlb_noldo_lib.MLB_NOLDO	
	=SMBUS_BATT_SDA -	27C1 65A2
	@mlb_noldo_lib.MLB_NOLDO	
	SMBUS_SMC_BSA_SDA -	27C2
	@mlb_noldo_lib.MLB_NOLDO	
	=SMBUS_BATT_SDA -	27C1 65A2
	@mlb_noldo_lib.MLB_NOLDO	
SMB_BSB_CLK	SMB_BSB_CLK -	27B3 45C5
	@mlb_noldo_lib.MLB_NOLDO	
SMB_BSB_DATA	SMB_BSB_DATA -	27B3 45C8
	@mlb_noldo_lib.MLB_NOLDO	
SMB_LINK_ALERT_L	SMB_LINK_ALERT_L -	23D5
	@mlb_noldo_lib.MLB_NOLDO	
SMB_MLB_CLK	SMB_MLB_CLK -	27C6 45B5
	@mlb_noldo_lib.MLB_NOLDO	
	THRM_DIMM0_SMB_CLK -	27B3 49C4
	@mlb_noldo_lib.MLB_NOLDO	
	SMBUS_SMC_MLB_SCL -	5B2 27C5
	@mlb_noldo_lib.MLB_NOLDO	
	SMB_THRM_CLK -	10B3 27C3
	@mlb_noldo_lib.MLB_NOLDO	
	THRM_DIMM0_SMB_CLK -	27B3 49C4
	@mlb_noldo_lib.MLB_NOLDO	
	SMB_THRM_CLK -	10B3 27C3
	@mlb_noldo_lib.MLB_NOLDO	
	SMBUS_SMC_MLB_SCL -	5B2 27C5
	@mlb_noldo_lib.MLB_NOLDO	
SMB_MLB_DATA	SMB_MLB_DATA -	27B6 45B5
	@mlb_noldo_lib.MLB_NOLDO	
	THRM_DIMM0_SMB_DATA -	27B3 49C4
	@mlb_noldo_lib.MLB_NOLDO	
	SMBUS_SMC_MLB_SDA -	5B2 27B5
	@mlb_noldo_lib.MLB_NOLDO	
	SMB_THRM_DATA -	10B3 27B3
	@mlb_noldo_lib.MLB_NOLDO	
	THRM_DIMM0_SMB_DATA -	27B3 49C4
	@mlb_noldo_lib.MLB_NOLDO	
	SMB_THRM_DATA -	10B3 27B3
	@mlb_noldo_lib.MLB_NOLDO	
	SMBUS_SMC_MLB_SDA -	5B2 27B5
	@mlb_noldo_lib.MLB_NOLDO	
SMC_AVCC_RC	SMC_AVCC_RC -	45D3
	@mlb_noldo_lib.MLB_NOLDO	
SMC_BATT_CHG_EN	SMC_BATT_CHG_EN -	5C1 45D8 46B6 66A4
	@mlb_noldo_lib.MLB_NOLDO	
SMC_BATT_ISENSE	SMC_BATT_ISENSE -	45D5 66B1
	@mlb_noldo_lib.MLB_NOLDO	
SMC_BATT_ISET	SMC_BATT_ISET -	5C1 45B5 66B7
	@mlb_noldo_lib.MLB_NOLDO	
SMC_BATT_TRICKLE_EN_	SMC_BATT_TRICKLE_EN_L -	5C1 45D8 46B6 66A3
L	@mlb_noldo_lib.MLB_NOLDO	

SMC_BATT_VSET	SMC_BATT_VSET - @mlb_noldo_lib.MLB_NOLDO	45B5 46C3
SMC_BC_ACOK	SMC_BC_ACOK - @mlb_noldo_lib.MLB_NOLDO	5C1 45C5 46B6 65C3 65C7 66A5
SMC_BKLIGHT_ENABLE	SMC_BKLIGHT_ENABLE - @mlb_noldo_lib.MLB_NOLDO	45C8
SMC_BS_ALRT_L	SMC_BS_ALRT_L - @mlb_noldo_lib.MLB_NOLDO	5D1 45C5 46C6 65A2
SMC_BS_ALRT_L_F	SMC_BS_ALRT_L_F - @mlb_noldo_lib.MLB_NOLDO	65A6
SMC_CASE_OPEN	SMC_CASE_OPEN - @mlb_noldo_lib.MLB_NOLDO	45C5 46B3
SMC_CPU_ISENSE	SMC_CPU_ISENSE - @mlb_noldo_lib.MLB_NOLDO	45D5 48C1
SMC_CPU_RESET_3_3_L	SMC_CPU_RESET_3_3_L - @mlb_noldo_lib.MLB_NOLDO	45B5 46C1
SMC_CPU_VSENSE	SMC_CPU_VSENSE - @mlb_noldo_lib.MLB_NOLDO	5B2 45D5 48B1
SMC_DCIN_ISENSE	SMC_DCIN_ISENSE - @mlb_noldo_lib.MLB_NOLDO	45D5 66C2
SMC_DISPLAY_ENABLE	SMC_DISPLAY_ENABLE - @mlb_noldo_lib.MLB_NOLDO	45C8
SMC_DISP_BKLT_A	SMC_DISP_BKLT_A - @mlb_noldo_lib.MLB_NOLDO	45B5
SMC_DISP_BKLT_B	SMC_DISP_BKLT_B - @mlb_noldo_lib.MLB_NOLDO	45B5 46C3
SMC_EXCARD_CP	SMC_EXCARD_CP - @mlb_noldo_lib.MLB_NOLDO	45B8 46C3
SMC_EXCARD_PWR_EN	SMC_EXCARD_PWR_EN - @mlb_noldo_lib.MLB_NOLDO	45B8 46C3
SMC_EXCARD_PWR_OC_L	SMC_EXCARD_PWR_OC_L - @mlb_noldo_lib.MLB_NOLDO	45B8 46D3
SMC_EXTAL	SMC_EXTAL - @mlb_noldo_lib.MLB_NOLDO	45C4 46C7
SMC_EXTSMI_L	SMC_EXTSMI_L - @mlb_noldo_lib.MLB_NOLDO	23B8 45B8
SMC_FAN_0_CTL	SMC_FAN_0_CTL - @mlb_noldo_lib.MLB_NOLDO	45B8 46C3
SMC_FAN_0_TACH	SMC_FAN_0_TACH - @mlb_noldo_lib.MLB_NOLDO	45B8 46C3
SMC_FAN_1_CTL	SMC_FAN_1_CTL - @mlb_noldo_lib.MLB_NOLDO	5D2 45B8 51B4
SMC_FAN_1_TACH	SMC_FAN_1_TACH - @mlb_noldo_lib.MLB_NOLDO	5D2 45B8 51C4
SMC_FAN_2_CTL	SMC_FAN_2_CTL - @mlb_noldo_lib.MLB_NOLDO	45B8 46C3
SMC_FAN_2_TACH	SMC_FAN_2_TACH - @mlb_noldo_lib.MLB_NOLDO	45B8 46C3
SMC_FAN_3_CTL	SMC_FAN_3_CTL - @mlb_noldo_lib.MLB_NOLDO	45B8 46C3
SMC_FAN_3_TACH	SMC_FAN_3_TACH - @mlb_noldo_lib.MLB_NOLDO	5A7 45B8 46C3
SMC_FWE	SMC_FWE - @mlb_noldo_lib.MLB_NOLDO	45B5 46C6
SMC_FWIRE_ISENSE	SMC_FWIRE_ISENSE - @mlb_noldo_lib.MLB_NOLDO	45D5 46B3
SMC_GPU_ISENSE	SMC_GPU_ISENSE - @mlb_noldo_lib.MLB_NOLDO	45D5 46C6
SMC_GPU_VSENSE	SMC_GPU_VSENSE - @mlb_noldo_lib.MLB_NOLDO	45D5 46C6
SMC_LID	SMC_LID - @mlb_noldo_lib.MLB_NOLDO	5B2 40C4 45B5 46C6 65A8
SMC_LID_F	SMC_LID_F - @mlb_noldo_lib.MLB_NOLDO	65A7
SMC_LRESET_L	SMC_LRESET_L - @mlb_noldo_lib.MLB_NOLDO	26B1 45C8
SMC_MANUAL_RST_L	SMC_MANUAL_RST_L - @mlb_noldo_lib.MLB_NOLDO	5B2 46D8
SMC_MD1	SMC_MD1 - @mlb_noldo_lib.MLB_NOLDO	5C2 45C2 47B6
SMC_MEM_ISENSE	SMC_MEM_ISENSE - @mlb_noldo_lib.MLB_NOLDO	45A8 46B3 61C1
SMC_NB_ISENSE	SMC_NB_ISENSE - @mlb_noldo_lib.MLB_NOLDO	45B8 46B3 62A5
SMC_NMI	SMC_NMI - @mlb_noldo_lib.MLB_NOLDO	5C2 45C1 47B5
SMC_ODD_DETECT	SMC_ODD_DETECT - @mlb_noldo_lib.MLB_NOLDO	34B3 45B8
SMC_ONOFF_L	SMC_ONOFF_L - @mlb_noldo_lib.MLB_NOLDO	40C8 45C5 46C8 46D6 48C8
	CONN_GEYSER_ONOFF_L - @mlb_noldo_lib.MLB_NOLDO	40C7
SMC_P20	SMC_P20 - @mlb_noldo_lib.MLB_NOLDO	45D8 46C6
SMC_P21	SMC_P21 - @mlb_noldo_lib.MLB_NOLDO	45D8 46C6
SMC_P22	SMC_P22 - @mlb_noldo_lib.MLB_NOLDO	45D8 46C6
SMC_P23	SMC_P23 - @mlb_noldo_lib.MLB_NOLDO	45D8 46C6
SMC_P26	SMC_P26 - @mlb_noldo_lib.MLB_NOLDO	45D8 46C6
SMC_P27	SMC_P27 - @mlb_noldo_lib.MLB_NOLDO	45D8 46C6
SMC_P44	SMC_P44 - @mlb_noldo_lib.MLB_NOLDO	45C8 46C6
SMC_P46	SMC_P46 - @mlb_noldo_lib.MLB_NOLDO	45C8 46C6
SMC_PB7	SMC_PB7 - @mlb_noldo_lib.MLB_NOLDO	45B8 46C6
SMC_PBUS_VSENSE	SMC_PBUS_VSENSE - @mlb_noldo_lib.MLB_NOLDO	45D5 48C5
SMC_PD3	SMC_PD3 - @mlb_noldo_lib.MLB_NOLDO	45B8 46C3
SMC_PG1	SMC_PG1 - @mlb_noldo_lib.MLB_NOLDO	45B5 46C6
SMC_PM_G2_EN	SMC_PM_G2_EN - @mlb_noldo_lib.MLB_NOLDO	45D5 63C8
SMC_PM_G2_EN_L	SMC_PM_G2_EN_L - @mlb_noldo_lib.MLB_NOLDO	63C7
SMC_PROCHOT	SMC_PROCHOT - @mlb_noldo_lib.MLB_NOLDO	45B5 46B6
SMC_PROCHOT_3_3_L	SMC_PROCHOT_3_3_L - @mlb_noldo_lib.MLB_NOLDO	45D5 46C1
SMC_PS_ON	SMC_PS_ON - @mlb_noldo_lib.MLB_NOLDO	5C1 39C6 45D5 46B3 65C3
SMC_RCIN_L	SMC_RCIN_L - @mlb_noldo_lib.MLB_NOLDO	21C3 45C8
SMC_RSTGATE_L	SMC_RSTGATE_L - @mlb_noldo_lib.MLB_NOLDO	26A3 45D8
SMC_RST_L	SMC_RST_L - @mlb_noldo_lib.MLB_NOLDO	5C2 45C3 46D7 47C5
SMC_RUNTIME_SCI_L	SMC_RUNTIME_SCI_L - @mlb_noldo_lib.MLB_NOLDO	23C8 45B8
SMC_RX_L	SMC_RX_L - @mlb_noldo_lib.MLB_NOLDO	5C2 45C8 46B2 46D6 47B5
SMC_SB_NMI	SMC_SB_NMI - @mlb_noldo_lib.MLB_NOLDO	23C3 45D8
SMC_SUS_CLK	SMC_SUS_CLK - @mlb_noldo_lib.MLB_NOLDO	45C5 46A6
SMC_SUS_CLK_R	SMC_SUS_CLK_R - @mlb_noldo_lib.MLB_NOLDO	46A7
SMC_SYS_ISET	SMC_SYS_ISET - @mlb_noldo_lib.MLB_NOLDO	45B5 66D7
SMC_SYS_KBDLED	SMC_SYS_KBDLED - @mlb_noldo_lib.MLB_NOLDO	45C8 46C6
SMC_SYS_LED_16B	SMC_SYS_LED_16B - @mlb_noldo_lib.MLB_NOLDO	45C8 46A4
SMC_SYS_VSET	SMC_SYS_VSET - @mlb_noldo_lib.MLB_NOLDO	45B5 46C3

SMC_TCK	SMC_TCK - @mlb_noldo_lib.MLB_NOLDO	5C2 45C5 46C6 47C5
SMC_TDI	SMC_TDI - @mlb_noldo_lib.MLB_NOLDO	5C2 45C5 46C6 47C5
SMC_TDO	SMC_TDO - @mlb_noldo_lib.MLB_NOLDO	5C2 45C5 46C6 47B6
SMC_THRMTRIP	SMC_THRMTRIP - @mlb_noldo_lib.MLB_NOLDO	45B5 46B5
SMC_TMS	SMC_TMS - @mlb_noldo_lib.MLB_NOLDO	5C2 45B5 46C6 47C6
SMC_TPM_GPIO	SMC_TPM_GPIO - @mlb_noldo_lib.MLB_NOLDO	45D5 46B2
SMC_TPM_PP	SMC_TPM_PP - @mlb_noldo_lib.MLB_NOLDO	45C8 53C7
SMC_TPM_PP_R	SMC_TPM_PP_R - @mlb_noldo_lib.MLB_NOLDO	53C6
SMC_TPM_RESET_L	SMC_TPM_RESET_L - @mlb_noldo_lib.MLB_NOLDO	45C8 46D6 53B7
SMC_TRST_L	SMC_TRST_L - @mlb_noldo_lib.MLB_NOLDO	5C2 45C1 47C6
SMC_TX_L	SMC_TX_L - @mlb_noldo_lib.MLB_NOLDO	5C2 45C8 46B2 46D6 47B6
SMC_VCL	SMC_VCL - @mlb_noldo_lib.MLB_NOLDO	45D3
SMC_WAKE_SCI_L	SMC_WAKE_SCI_L - @mlb_noldo_lib.MLB_NOLDO	23C1 45D5
SMC_XTAL	SMC_XTAL - @mlb_noldo_lib.MLB_NOLDO	45C4 46C7
SMLINK<0>	SMLINK<0> - @mlb_noldo_lib.MLB_NOLDO	23D5
SMLINK<1>	SMLINK<1> - @mlb_noldo_lib.MLB_NOLDO	23D5
SMS_ACC_SELFTEST	SMS_ACC_SELFTEST - @mlb_noldo_lib.MLB_NOLDO	52B6
SMS_INT_L	SMS_INT_L - @mlb_noldo_lib.MLB_NOLDO	23C3 45B5 46D6
SMS_ONOFF_L	SMS_ONOFF_L - @mlb_noldo_lib.MLB_NOLDO	45B5 52C7
SMS_X_AXIS	SMS_X_AXIS - @mlb_noldo_lib.MLB_NOLDO	45B8 52C2
SMS_Y_AXIS	SMS_Y_AXIS - @mlb_noldo_lib.MLB_NOLDO	45B8 52C2
SMS_Z_AXIS	SMS_Z_AXIS - @mlb_noldo_lib.MLB_NOLDO	45B8 52C2
SPI_ARB	SPI_ARB - @mlb_noldo_lib.MLB_NOLDO	22C6 45D5
SPI_CE_L	SPI_CE_L - @mlb_noldo_lib.MLB_NOLDO	22C6 45B5 50C7
SPI_HOLD_L	SPI_HOLD_L - @mlb_noldo_lib.MLB_NOLDO	50C4
SPI_SCLK	SPI_SCLK - @mlb_noldo_lib.MLB_NOLDO	22C6 45D5 50C7
SPI_SCLK_R	SPI_SCLK_R - @mlb_noldo_lib.MLB_NOLDO	50C4
SPI_SI	SPI_SI - @mlb_noldo_lib.MLB_NOLDO	22C6 45D5 50C1
SPI_SI_R	SPI_SI_R - @mlb_noldo_lib.MLB_NOLDO	50C3
SPI_SO	SPI_SO - @mlb_noldo_lib.MLB_NOLDO	22C6 45D5 50C1
SPI_SO_R	SPI_SO_R - @mlb_noldo_lib.MLB_NOLDO	50C3
SPI_WP_L	SPI_WP_L - @mlb_noldo_lib.MLB_NOLDO	50C4
SPKRAMP_L_N_OUT	SPKRAMP_L_N_OUT - @mlb_noldo_lib.MLB_NOLDO	55B4 55C3
SPKRAMP_L_P_OUT	SPKRAMP_L_P_OUT - @mlb_noldo_lib.MLB_NOLDO	55B4 55C3
SPKRAMP_R_N_OUT	SPKRAMP_R_N_OUT - @mlb_noldo_lib.MLB_NOLDO	55C3 55C4
SPKRAMP_R_P_OUT	SPKRAMP_R_P_OUT - @mlb_noldo_lib.MLB_NOLDO	55C4 55D3
SPKRAMP_SUB_N_OUT	SPKRAMP_SUB_N_OUT - @mlb_noldo_lib.MLB_NOLDO	55A4 55B3
SPKRAMP_SUB_P_OUT	SPKRAMP_SUB_P_OUT - @mlb_noldo_lib.MLB_NOLDO	55A4 55B3
SPKRAMP_SYNC1	SPKRAMP_SYNC1 - @mlb_noldo_lib.MLB_NOLDO	55A4 55C4
SPKRAMP_SYNC2	SPKRAMP_SYNC2 - @mlb_noldo_lib.MLB_NOLDO	55A4 55B4
SPKRAMP_THERMPLANE	SPKRAMP_THERMPLANE - @mlb_noldo_lib.MLB_NOLDO	55A4 55A4 55B4 55C4
SPKRCONN_L_N_OUT	SPKRCONN_L_N_OUT - @mlb_noldo_lib.MLB_NOLDO	55C1 56D2
SPKRCONN_L_P_OUT	SPKRCONN_L_P_OUT - @mlb_noldo_lib.MLB_NOLDO	55C1 56D2
SPKRCONN_R_N_OUT	SPKRCONN_R_N_OUT - @mlb_noldo_lib.MLB_NOLDO	55C1 56C2
SPKRCONN_R_P_OUT	SPKRCONN_R_P_OUT - @mlb_noldo_lib.MLB_NOLDO	55D1 56C2
SPKRCONN_SUB_N_OUT	SPKRCONN_SUB_N_OUT - @mlb_noldo_lib.MLB_NOLDO	55B1 56C2
SPKRCONN_SUB_P_OUT	SPKRCONN_SUB_P_OUT - @mlb_noldo_lib.MLB_NOLDO	55B1 56C2
SPKR_SHIELD	SPKR_SHIELD - @mlb_noldo_lib.MLB_NOLDO	56C2
ST_ACCEL_ON_L	ST_ACCEL_ON_L - @mlb_noldo_lib.MLB_NOLDO	52B6
SUS_CLK_SB	SUS_CLK_SB - @mlb_noldo_lib.MLB_NOLDO	6B4 23C3
	SUS_CLK_SB_SPN - @mlb_noldo_lib.MLB_NOLDO	6B3
SV_SET_UP	SV_SET_UP - @mlb_noldo_lib.MLB_NOLDO	5C2 23B6 23C3 47B5
SYS_LED_ANODE	SYS_LED_ANODE - @mlb_noldo_lib.MLB_NOLDO	5B2 35C5 46A3
SYS_LED_ANODE_L	SYS_LED_ANODE_L - @mlb_noldo_lib.MLB_NOLDO	35C7
SYS_LED_ILIM	SYS_LED_ILIM - @mlb_noldo_lib.MLB_NOLDO	46A3
SYS_LED_L	SYS_LED_L - @mlb_noldo_lib.MLB_NOLDO	46A3
SYS_LED_L_VDIV	SYS_LED_L_VDIV - @mlb_noldo_lib.MLB_NOLDO	46A3
SYS_ONEWIRE	SYS_ONEWIRE - @mlb_noldo_lib.MLB_NOLDO	5C1 45B8 46D6 65C8
THRM_ALERT	THRM_ALERT - @mlb_noldo_lib.MLB_NOLDO	10B4
THRM_ALERT_L	THRM_ALERT_L - @mlb_noldo_lib.MLB_NOLDO	10C4
THRM_CPU_DX_N	THRM_CPU_DX_N - @mlb_noldo_lib.MLB_NOLDO	10B5
THRM_CPU_DX_P	THRM_CPU_DX_P - @mlb_noldo_lib.MLB_NOLDO	10B5
THRM_DIMM0_3V3_UNFILTERED	THRM_DIMM0_3V3_UNFILTERED - @mlb_noldo_lib.MLB_NOLDO	49D4
THRM_DIMM0_DXN	THRM_DIMM0_DXN - @mlb_noldo_lib.MLB_NOLDO	40C5 49C6
THRM_DIMM0_DXP1	THRM_DIMM0_DXP1 - @mlb_noldo_lib.MLB_NOLDO	40C4 49D6
THRM_DIMM0_DXP2	THRM_DIMM0_DXP2 - @mlb_noldo_lib.MLB_NOLDO	49C6
THRM_DIMM1_3V3_UNFILTERED	THRM_DIMM1_3V3_UNFILTERED - @mlb_noldo_lib.MLB_NOLDO	49B4
THRM_DIMM1_DXN	THRM_DIMM1_DXN - @mlb_noldo_lib.MLB_NOLDO	49B5
THRM_DIMM1_DXP1	THRM_DIMM1_DXP1 - @mlb_noldo_lib.MLB_NOLDO	49B5
THRM_DIMM1_DXP2	THRM_DIMM1_DXP2 - @mlb_noldo_lib.MLB_NOLDO	49A5

TMDS_EXT_RES	TMDS_EXT_RES - @mlb_noldo_lib.MLB_NOLDO	68B4
TMDS_EXT_SWING	TMDS_EXT_SWING - @mlb_noldo_lib.MLB_NOLDO	68B3
TMDS_HTPLG	TMDS_HTPLG - @mlb_noldo_lib.MLB_NOLDO	68A7 69C6
TMDS_HTPLG_R	TMDS_HTPLG_R - @mlb_noldo_lib.MLB_NOLDO	68A7
TMDS_I2C_SCL	TMDS_I2C_SCL - @mlb_noldo_lib.MLB_NOLDO	68B2
TMDS_I2C_SDA	TMDS_I2C_SDA - @mlb_noldo_lib.MLB_NOLDO	68B2
TMDS_INT_N	TMDS_INT_N - @mlb_noldo_lib.MLB_NOLDO	68B5
TMDS_INT_P	TMDS_INT_P - @mlb_noldo_lib.MLB_NOLDO	68B5
TMDS_RST_L	TMDS_RST_L - @mlb_noldo_lib.MLB_NOLDO	26B1 68B5
TMDS_SDB_N	TMDS_SDB_N - @mlb_noldo_lib.MLB_NOLDO	68B4
TMDS_SDB_P	TMDS_SDB_P - @mlb_noldo_lib.MLB_NOLDO	68B4
TMDS_SDC_N	TMDS_SDC_N - @mlb_noldo_lib.MLB_NOLDO	68B4
TMDS_SDC_P	TMDS_SDC_P - @mlb_noldo_lib.MLB_NOLDO	68B4
TMDS_SDG_N	TMDS_SDG_N - @mlb_noldo_lib.MLB_NOLDO	68B4
TMDS_SDG_P	TMDS_SDG_P - @mlb_noldo_lib.MLB_NOLDO	68B4
TMDS_SDR_N	TMDS_SDR_N - @mlb_noldo_lib.MLB_NOLDO	68B4
TMDS_SDR_P	TMDS_SDR_P - @mlb_noldo_lib.MLB_NOLDO	68B4
TMDS_TX<0>	TMDS_TX<0> - @mlb_noldo_lib.MLB_NOLDO	68D2
TMDS_TX<1>	TMDS_TX<1> - @mlb_noldo_lib.MLB_NOLDO	68D2
TMDS_TX<2>	TMDS_TX<2> - @mlb_noldo_lib.MLB_NOLDO	68C2
TMDS_TX_CLK	TMDS_TX_CLK - @mlb_noldo_lib.MLB_NOLDO	68C2
TMDS_TX_CLK_N	TMDS_TX_CLK_N - @mlb_noldo_lib.MLB_NOLDO	68B2 68C1 69A2
TMDS_TX_CLK_P	TMDS_TX_CLK_P - @mlb_noldo_lib.MLB_NOLDO	68B2 68C3 69A2
TMDS_TX_CONN_CLK_N	TMDS_TX_CONN_CLK_N - @mlb_noldo_lib.MLB_NOLDO	69B3
TMDS_TX_CONN_CLK_P	TMDS_TX_CONN_CLK_P - @mlb_noldo_lib.MLB_NOLDO	69B3
TMDS_TX_CONN_N<0>	TMDS_TX_CONN_N<0> - @mlb_noldo_lib.MLB_NOLDO	69B3
TMDS_TX_CONN_N<1>	TMDS_TX_CONN_N<1> - @mlb_noldo_lib.MLB_NOLDO	69B3
TMDS_TX_CONN_N<2>	TMDS_TX_CONN_N<2> - @mlb_noldo_lib.MLB_NOLDO	69B3
TMDS_TX_CONN_P<0>	TMDS_TX_CONN_P<0> - @mlb_noldo_lib.MLB_NOLDO	69B3
TMDS_TX_CONN_P<1>	TMDS_TX_CONN_P<1> - @mlb_noldo_lib.MLB_NOLDO	69B3
TMDS_TX_CONN_P<2>	TMDS_TX_CONN_P<2> - @mlb_noldo_lib.MLB_NOLDO	69B3
TMDS_TX_N<0>	TMDS_TX_N<0> - @mlb_noldo_lib.MLB_NOLDO	68B2 68D1 69B2
TMDS_TX_N<1>	TMDS_TX_N<1> - @mlb_noldo_lib.MLB_NOLDO	68B2 68D1 69B2
TMDS_TX_N<2>	TMDS_TX_N<2> - @mlb_noldo_lib.MLB_NOLDO	68B2 68C1 69B2
TMDS_TX_P<0>	TMDS_TX_P<0> - @mlb_noldo_lib.MLB_NOLDO	68B2 68D3 69B2
TMDS_TX_P<1>	TMDS_TX_P<1> - @mlb_noldo_lib.MLB_NOLDO	68B2 68D3 69B2
TMDS_TX_P<2>	TMDS_TX_P<2> - @mlb_noldo_lib.MLB_NOLDO	68B2 68C3 69B2
TPM_BADD	TPM_BADD - @mlb_noldo_lib.MLB_NOLDO	53C3
TPM_GPIO1	TPM_GPIO1 - @mlb_noldo_lib.MLB_NOLDO	46B1 53C6
TPM_GPIO2	TPM_GPIO2 - @mlb_noldo_lib.MLB_NOLDO	46B1 53C6
TPM_LRESET_L	TPM_LRESET_L - @mlb_noldo_lib.MLB_NOLDO	26B1 53B7
TPM_RST_L	TPM_RST_L - @mlb_noldo_lib.MLB_NOLDO	53B6
TPM_XTALI	TPM_XTALI - @mlb_noldo_lib.MLB_NOLDO	53C6
TPM_XTALO	TPM_XTALO - @mlb_noldo_lib.MLB_NOLDO	53C6
TPS73115_NR	TPS73115_NR - @mlb_noldo_lib.MLB_NOLDO	19D5
TP_AZ_DOCK_EN_L	TP_AZ_DOCK_EN_L - @mlb_noldo_lib.MLB_NOLDO	23C5
TP_AZ_DOCK_RST_L	TP_AZ_DOCK_RST_L - @mlb_noldo_lib.MLB_NOLDO	23C5
TP_CPU_A32_L	TP_CPU_A32_L - @mlb_noldo_lib.MLB_NOLDO	7C8
TP_CPU_A33_L	TP_CPU_A33_L - @mlb_noldo_lib.MLB_NOLDO	7B8
TP_CPU_A34_L	TP_CPU_A34_L - @mlb_noldo_lib.MLB_NOLDO	7B8
TP_CPU_A35_L	TP_CPU_A35_L - @mlb_noldo_lib.MLB_NOLDO	7B8
TP_CPU_A36_L	TP_CPU_A36_L - @mlb_noldo_lib.MLB_NOLDO	7B8
TP_CPU_A37_L	TP_CPU_A37_L - @mlb_noldo_lib.MLB_NOLDO	7B8
TP_CPU_A38_L	TP_CPU_A38_L - @mlb_noldo_lib.MLB_NOLDO	7B8
TP_CPU_A39_L	TP_CPU_A39_L - @mlb_noldo_lib.MLB_NOLDO	7B8
TP_CPU_APM0_L	TP_CPU_APM0_L - @mlb_noldo_lib.MLB_NOLDO	7B8
TP_CPU_APM1_L	TP_CPU_APM1_L - @mlb_noldo_lib.MLB_NOLDO	7B8
TP_CPU_CPUSLP_L	TP_CPU_CPUSLP_L - @mlb_noldo_lib.MLB_NOLDO	21C4
TP_CPU_EXTBREF	TP_CPU_EXTBREF - @mlb_noldo_lib.MLB_NOLDO	7B6
TP_CPU_HFPLL	TP_CPU_HFPLL - @mlb_noldo_lib.MLB_NOLDO	7B8
TP_CPU_SPARE0	TP_CPU_SPARE0 - @mlb_noldo_lib.MLB_NOLDO	7B6
TP_CPU_SPARE1	TP_CPU_SPARE1 - @mlb_noldo_lib.MLB_NOLDO	7B6

TP_CPU_SPARE2	TP_CPU_SPARE2 - @mlb_noldo_lib.MLB_NOLDO	7B6
TP_CPU_SPARE3	TP_CPU_SPARE3 - @mlb_noldo_lib.MLB_NOLDO	7B6
TP_CPU_SPARE4	TP_CPU_SPARE4 - @mlb_noldo_lib.MLB_NOLDO	7B6
TP_CPU_SPARE5	TP_CPU_SPARE5 - @mlb_noldo_lib.MLB_NOLDO	7B6
TP_CPU_SPARE6	TP_CPU_SPARE6 - @mlb_noldo_lib.MLB_NOLDO	7B6
TP_CPU_SPARE7	TP_CPU_SPARE7 - @mlb_noldo_lib.MLB_NOLDO	7B6
TP_LVDS_VBG	TP_LVDS_VBG - @mlb_noldo_lib.MLB_NOLDO	13D5
TP_NB_TESTIN_L	TP_NB_TESTIN_L - @mlb_noldo_lib.MLB_NOLDO	14D6
TP_NB_XOR_FSB2_H7	TP_NB_XOR_FSB2_H7 - @mlb_noldo_lib.MLB_NOLDO	14D6
TP_NB_XOR_LVDS_A34	TP_NB_XOR_LVDS_A34 - @mlb_noldo_lib.MLB_NOLDO	14C6
TP_NB_XOR_LVDS_A35	TP_NB_XOR_LVDS_A35 - @mlb_noldo_lib.MLB_NOLDO	14C6
TP_NB_XOR_LVDS_D27	TP_NB_XOR_LVDS_D27 - @mlb_noldo_lib.MLB_NOLDO	14C6
TP_NB_XOR_LVDS_D28	TP_NB_XOR_LVDS_D28 - @mlb_noldo_lib.MLB_NOLDO	14C6
TP_PCI_GNT0_L	TP_PCI_GNT0_L - @mlb_noldo_lib.MLB_NOLDO	22B6
TP_PCI_GNT1_L	TP_PCI_GNT1_L - @mlb_noldo_lib.MLB_NOLDO	22B6
TP_PCI_GNT2_L	TP_PCI_GNT2_L - @mlb_noldo_lib.MLB_NOLDO	22B6
TP_PCI_PME_L	TP_PCI_PME_L - @mlb_noldo_lib.MLB_NOLDO	22A6
TP_SB_ACZ_SDIN1	TP_SB_ACZ_SDIN1 - @mlb_noldo_lib.MLB_NOLDO	21C6
TP_SB_ACZ_SDIN2	TP_SB_ACZ_SDIN2 - @mlb_noldo_lib.MLB_NOLDO	21C6
TP_SB_DRQ0_L	TP_SB_DRQ0_L - @mlb_noldo_lib.MLB_NOLDO	21D4
TP_SB_GPIO6	TP_SB_GPIO6 - @mlb_noldo_lib.MLB_NOLDO	23C5
TP_SB_GPIO22	TP_SB_GPIO22 - @mlb_noldo_lib.MLB_NOLDO	6B1 22B6
	=SB_GPIO22 - @mlb_noldo_lib.MLB_NOLDO	6B2 69A6
	SB_GPIO22 - @mlb_noldo_lib.MLB_NOLDO	6B2
	=SB_GPIO22 - @mlb_noldo_lib.MLB_NOLDO	6B2 69A6
TP_SB_GPIO23	TP_SB_GPIO23 - @mlb_noldo_lib.MLB_NOLDO	21D5
TP_SB_GPIO25_DO_NOT_USE	TP_SB_GPIO25_DO_NOT_USE - @mlb_noldo_lib.MLB_NOLDO	23C3
TP_SB_GPIO38	TP_SB_GPIO38 - @mlb_noldo_lib.MLB_NOLDO	23C3
TP_SB_RCVENIN_L	TP_SB_RCVENIN_L - @mlb_noldo_lib.MLB_NOLDO	15B2
TP_SB_RSVD9	TP_SB_RSVD9 - @mlb_noldo_lib.MLB_NOLDO	22A6
TP_SB_SATALED_L	TP_SB_SATALED_L - @mlb_noldo_lib.MLB_NOLDO	21C6
TP_SB_XOR-AD5	TP_SB_XOR-AD5 - @mlb_noldo_lib.MLB_NOLDO	22A7
TP_SB_XOR-AD9	TP_SB_XOR-AD9 - @mlb_noldo_lib.MLB_NOLDO	22A7
TP_SB_XOR-AE5	TP_SB_XOR-AE5 - @mlb_noldo_lib.MLB_NOLDO	22A7
TP_SB_XOR-AG4	TP_SB_XOR-AG4 - @mlb_noldo_lib.MLB_NOLDO	22A7
TP_SB_XOR-AH4	TP_SB_XOR-AH4 - @mlb_noldo_lib.MLB_NOLDO	22A7
TP_SB_XOR-U3	TP_SB_XOR-U3 - @mlb_noldo_lib.MLB_NOLDO	21C6
TP_SB_XOR-U7	TP_SB_XOR-U7 - @mlb_noldo_lib.MLB_NOLDO	21C6
TP_SB_XOR-V6	TP_SB_XOR-V6 - @mlb_noldo_lib.MLB_NOLDO	21C6
TP_SB_XOR-V7	TP_SB_XOR-V7 - @mlb_noldo_lib.MLB_NOLDO	21C6
TP_SB_XOR-Y1	TP_SB_XOR-Y1 - @mlb_noldo_lib.MLB_NOLDO	21C6
TP_SB_XOR-Y2	TP_SB_XOR-Y2 - @mlb_noldo_lib.MLB_NOLDO	21C6
TP_SB_XOR_AE9	TP_SB_XOR_AE9 - @mlb_noldo_lib.MLB_NOLDO	22A6
TP_SB_XOR_AG8	TP_SB_XOR_AG8 - @mlb_noldo_lib.MLB_NOLDO	22A6
TP_SB_XOR_AH8	TP_SB_XOR_AH8 - @mlb_noldo_lib.MLB_NOLDO	22A6
TP_SB_XOR_W1	TP_SB_XOR_W1 - @mlb_noldo_lib.MLB_NOLDO	21C6
TP_USBN_F	TP_USBN_F - @mlb_noldo_lib.MLB_NOLDO	5C1
TP_USBP_F	TP_USBP_F - @mlb_noldo_lib.MLB_NOLDO	5C1
TV_DACA_OUT	TV_DACA_OUT - @mlb_noldo_lib.MLB_NOLDO	13C5 69B8
TV_DACB_OUT	TV_DACB_OUT - @mlb_noldo_lib.MLB_NOLDO	13C5 69A8
TV_DACC_OUT	TV_DACC_OUT - @mlb_noldo_lib.MLB_NOLDO	13C5 69A8
TV_IREF	TV_IREF - @mlb_noldo_lib.MLB_NOLDO	13C5 69C8
USB2_BT_F_N	USB2_BT_F_N - @mlb_noldo_lib.MLB_NOLDO	44C4
USB2_BT_F_P	USB2_BT_F_P - @mlb_noldo_lib.MLB_NOLDO	44B4
USB2_CAMERA_CONN_N	USB2_CAMERA_CONN_N - @mlb_noldo_lib.MLB_NOLDO	67A2
USB2_CAMERA_CONN_P	USB2_CAMERA_CONN_P - @mlb_noldo_lib.MLB_NOLDO	67B2
USB2_EXTA_F_N	USB2_EXTA_F_N - @mlb_noldo_lib.MLB_NOLDO	42C2
USB2_EXTA_F_P	USB2_EXTA_F_P - @mlb_noldo_lib.MLB_NOLDO	42C2
USB2_EXTB_F_N	USB2_EXTB_F_N - @mlb_noldo_lib.MLB_NOLDO	42B2
USB2_EXTB_F_P	USB2_EXTB_F_P - @mlb_noldo_lib.MLB_NOLDO	42B2
USB2_GND_EXTA_F	USB2_GND_EXTA_F - @mlb_noldo_lib.MLB_NOLDO	42C2
USB2_GND_EXTB_F	USB2_GND_EXTB_F - @mlb_noldo_lib.MLB_NOLDO	42B2
USB_A_N	USB_A_N - @mlb_noldo_lib.MLB_NOLDO	6C1 22C2

	=USB2_EXTA_N -	6C2 42C5
	@mlb_noldo_lib.MLB_NOLDO	
	USB2_EXTA_N -	6C2
	@mlb_noldo_lib.MLB_NOLDO	
	=USB2_EXTA_N -	6C2 42C5
	@mlb_noldo_lib.MLB_NOLDO	
USB_A_OC_L	USB_A_OC_L -	6C1 22C4 22D8
	@mlb_noldo_lib.MLB_NOLDO	
	=EXTAUSB_OC_L -	6C2 42C8
	@mlb_noldo_lib.MLB_NOLDO	
	EXTAUSB_OC_L -	6C2
	@mlb_noldo_lib.MLB_NOLDO	
	=EXTAUSB_OC_L -	6C2 42C8
	@mlb_noldo_lib.MLB_NOLDO	
USB_A_P	USB_A_P - @mlb_noldo_lib.MLB_NOLDO	6C1 22C2
	=USB2_EXTA_P -	6C2 42C5
	@mlb_noldo_lib.MLB_NOLDO	
	USB2_EXTA_P -	6C2
	@mlb_noldo_lib.MLB_NOLDO	
	=USB2_EXTA_P -	6C2 42C5
	@mlb_noldo_lib.MLB_NOLDO	
USB_B_N	USB_B_N - @mlb_noldo_lib.MLB_NOLDO	6C1 22C2
	=USB2_GEYSER_N -	6C2 40C7
	@mlb_noldo_lib.MLB_NOLDO	
	USB2_GEYSER_N -	6C2
	@mlb_noldo_lib.MLB_NOLDO	
	=USB2_GEYSER_N -	6C2 40C7
	@mlb_noldo_lib.MLB_NOLDO	
USB_B_OC_L	USB_B_OC_L -	22C4 22D8
	@mlb_noldo_lib.MLB_NOLDO	
USB_B_P	USB_B_P - @mlb_noldo_lib.MLB_NOLDO	6C1 22C2
	=USB2_GEYSER_P -	6C2 40C7
	@mlb_noldo_lib.MLB_NOLDO	
	USB2_GEYSER_P -	6C2
	@mlb_noldo_lib.MLB_NOLDO	
	=USB2_GEYSER_P -	6C2 40C7
	@mlb_noldo_lib.MLB_NOLDO	
USB_C_N	USB_C_N - @mlb_noldo_lib.MLB_NOLDO	6C1 22C2
	=USB2_EXTB_N -	6C2 42B5
	@mlb_noldo_lib.MLB_NOLDO	
	USB2_EXTB_N -	6C2
	@mlb_noldo_lib.MLB_NOLDO	
	=USB2_EXTB_N -	6C2 42B5
	@mlb_noldo_lib.MLB_NOLDO	
USB_C_P	USB_C_P - @mlb_noldo_lib.MLB_NOLDO	6C1 22C2
	=USB2_EXTB_P -	6C2 42B5
	@mlb_noldo_lib.MLB_NOLDO	
	USB2_EXTB_P -	6C2
	@mlb_noldo_lib.MLB_NOLDO	
	=USB2_EXTB_P -	6C2 42B5
	@mlb_noldo_lib.MLB_NOLDO	
USB_D_OC_L	USB_D_OC_L -	22C4 22D8
	@mlb_noldo_lib.MLB_NOLDO	
USB_E_N	USB_E_N - @mlb_noldo_lib.MLB_NOLDO	6C1 22C2
	TP_USBN_E -	5C1 6C2
	@mlb_noldo_lib.MLB_NOLDO	
USB_E_OC_L	USB_E_OC_L -	22C4 22D8
	@mlb_noldo_lib.MLB_NOLDO	
USB_E_P	USB_E_P - @mlb_noldo_lib.MLB_NOLDO	6C1 22C2
	TP_USBP_E -	5C1 6C2
	@mlb_noldo_lib.MLB_NOLDO	
USB_F_N	USB_F_N - @mlb_noldo_lib.MLB_NOLDO	6C1 22C2
	=USB2_IR_N -	6C2 41C6
	@mlb_noldo_lib.MLB_NOLDO	
	USB_IR_N - @mlb_noldo_lib.MLB_NOLDO	6C2
	=USB2_IR_N -	6C2 41C6
	@mlb_noldo_lib.MLB_NOLDO	
USB_F_P	USB_F_P - @mlb_noldo_lib.MLB_NOLDO	6C1 22C2
	=USB2_IR_P -	6C2 41C6
	@mlb_noldo_lib.MLB_NOLDO	
	USB_IR_P - @mlb_noldo_lib.MLB_NOLDO	6C2
	=USB2_IR_P -	6C2 41C6
	@mlb_noldo_lib.MLB_NOLDO	
USB_G_N	USB_G_N - @mlb_noldo_lib.MLB_NOLDO	6B1 22C2
	=USB2_BT_N -	6B2 44C6
	@mlb_noldo_lib.MLB_NOLDO	
	USB_BT_N - @mlb_noldo_lib.MLB_NOLDO	6B2
	=USB2_BT_N -	6B2 44C6
	@mlb_noldo_lib.MLB_NOLDO	
USB_G_P	USB_G_P - @mlb_noldo_lib.MLB_NOLDO	6B1 22C2
	=USB2_BT_P -	6C2 44C6
	@mlb_noldo_lib.MLB_NOLDO	
	USB_BT_P - @mlb_noldo_lib.MLB_NOLDO	6C2
	=USB2_BT_P -	6C2 44C6
	@mlb_noldo_lib.MLB_NOLDO	
USB_RBIAS_PN	USB_RBIAS_PN -	22C2
	@mlb_noldo_lib.MLB_NOLDO	
VGA_B	VGA_B - @mlb_noldo_lib.MLB_NOLDO	69B4
VGA_G	VGA_G - @mlb_noldo_lib.MLB_NOLDO	69B4
VGA_HSYNC	VGA_HSYNC -	69B4 69C1
	@mlb_noldo_lib.MLB_NOLDO	
VGA_R	VGA_R - @mlb_noldo_lib.MLB_NOLDO	69A4
VGA_VSYNC	VGA_VSYNC -	69B4 69C1
	@mlb_noldo_lib.MLB_NOLDO	
VOL_DOWN	VOL_DOWN - @mlb_noldo_lib.MLB_NOLDO	54B7 54C7
VOL_UP	VOL_UP - @mlb_noldo_lib.MLB_NOLDO	54B7 54C7
VREG_FB	VREG_FB - @mlb_noldo_lib.MLB_NOLDO	54A4
VR_PWRGD_CK410	VR_PWRGD_CK410 -	23C5 26A8
	@mlb_noldo_lib.MLB_NOLDO	
VR_PWRGOOD_DELAY	VR_PWRGOOD_DELAY -	14B6 26B5 58C7
	@mlb_noldo_lib.MLB_NOLDO	
XDP_BPM_L<0>	XDP_BPM_L<0> -	7C6 11B2
	@mlb_noldo_lib.MLB_NOLDO	
XDP_BPM_L<1>	XDP_BPM_L<1> -	7C6 11B2
	@mlb_noldo_lib.MLB_NOLDO	
XDP_BPM_L<2>	XDP_BPM_L<2> -	7C6 11B2
	@mlb_noldo_lib.MLB_NOLDO	
XDP_BPM_L<3>	XDP_BPM_L<3> -	7C6 11B3
	@mlb_noldo_lib.MLB_NOLDO	
XDP_BPM_L<4>	XDP_BPM_L<4> -	7C6 11B2
	@mlb_noldo_lib.MLB_NOLDO	
XDP_BPM_L<5>	XDP_BPM_L<5> -	7C6 11B2
	@mlb_noldo_lib.MLB_NOLDO	
XDP_DBRESET_L	XDP_DBRESET_L -	7C6 11B4 26C6
	@mlb_noldo_lib.MLB_NOLDO	
XDP_TCK	XDP_TCK - @mlb_noldo_lib.MLB_NOLDO	7A8 7C6 11B2 11B3
XDP_TDI	XDP_TDI - @mlb_noldo_lib.MLB_NOLDO	7B8 7C6 11B3
XDP_TDO	XDP_TDO - @mlb_noldo_lib.MLB_NOLDO	7C6 11B5
XDP_TMS	XDP_TMS - @mlb_noldo_lib.MLB_NOLDO	7B8 7C6 11B2
XDP_TRST_L	XDP_TRST_L -	7C6 11B3
	@mlb_noldo_lib.MLB_NOLDO	

Title: Cref Part Report
Design: mlb_noldo
Date: Mar 22 15:44:50 2007

C0607	CAP_402	mlb_noldo[6C7]
C0608	CAP_402	mlb_noldo[6C7]
C0610	CAP_402	mlb_noldo[6C7]
C0611	CAP_402	mlb_noldo[6C7]
C0612	CAP_402	mlb_noldo[6A8]
C0613	CAP_402	mlb_noldo[6A8]
C0614	CAP_402	mlb_noldo[6B7]
C0615	CAP_402	mlb_noldo[6B7]
C0616	CAP_402	mlb_noldo[6B7]
C0617	CAP_402	mlb_noldo[6B7]
C0618	CAP_402	mlb_noldo[6A8]
C0619	CAP_402	mlb_noldo[6A7]
C0630	CAP_402	mlb_noldo[6C7]
C0900	CAP_805	mlb_noldo[9B5]
C0901	CAP_805	mlb_noldo[9B6]
C0902	CAP_805	mlb_noldo[9A5]
C0904	CAP_805	mlb_noldo[9A6]
C0907	CAP_805	mlb_noldo[9B4]
C0908	CAP_805	mlb_noldo[9B6]
C0909	CAP_805	mlb_noldo[9B5]
C0910	CAP_805	mlb_noldo[9B7]
C0911	CAP_805	mlb_noldo[9B7]
C0912	CAP_805	mlb_noldo[9A6]
C0913	CAP_805	mlb_noldo[9A7]
C0918	CAP_805	mlb_noldo[9A7]
C0920	CAP_805	mlb_noldo[9A4]
C0923	CAP_805	mlb_noldo[9B7]
C0924	CAP_805	mlb_noldo[9A7]
C0926	CAP_402	mlb_noldo[9B7]
C0928	CAP_805	mlb_noldo[9B5]
C0929	CAP_805	mlb_noldo[9B4]
C0930	CAP_805	mlb_noldo[9A5]
C0931	CAP_805	mlb_noldo[9A5]
C0934	CAP_402	mlb_noldo[9B7]
C0935	CAP_402	mlb_noldo[9B7]
C0936	CAP_402	mlb_noldo[9B6]
C0937	CAP_402	mlb_noldo[9B6]
C0938	CAP_402	mlb_noldo[9B5]
C0939	CAP_805	mlb_noldo[9A4]
C0940	CAP_P_3P_D2T	mlb_noldo[9B5]
C0941	CAP_P_3P_D2T	mlb_noldo[9A7]
C0942	CAP_P_3P_D2T	mlb_noldo[9A7]
C0943	CAP_P_3P_D2T	mlb_noldo[9A6]
C0944	CAP_P_3P_D2T	mlb_noldo[9A6]
C0946	CAP_P_3P_D2T	mlb_noldo[9A5]
C0950	CAP_402	mlb_noldo[9D7]
C0951	CAP_603	mlb_noldo[9D7]
C1001	CAP_402	mlb_noldo[10B5]
C1002	CAP_402	mlb_noldo[10C4]
C1100	CAP_402	mlb_noldo[11B3]
C1211	CAP_402	mlb_noldo[12C3]
C1226	CAP_402	mlb_noldo[12B6]
C1236	CAP_402	mlb_noldo[12A6]
C1415	CAP_402	mlb_noldo[14C3]
C1416	CAP_402	mlb_noldo[14C2]
C1610	CAP_402	mlb_noldo[16B5]
C1611	CAP_402	mlb_noldo[16B4]
C1612	CAP_402	mlb_noldo[16B4]
C1613	CAP_402	mlb_noldo[16B8]
C1614	CAP_402	mlb_noldo[16B8]
C1615	CAP_402	mlb_noldo[16B6]
C1620	CAP_603	mlb_noldo[16B5]
C1621	CAP_603	mlb_noldo[16B5]
C1711	CAP_402	mlb_noldo[17A3]
C1712	CAP_402	mlb_noldo[17A3]
C1713	CAP_402	mlb_noldo[17B3]
C1900	CAP_P_3P_D2T	mlb_noldo[19B8]
C1902	CAP_603	mlb_noldo[19B7]
C1903	CAP_603	mlb_noldo[19B7]
C1904	CAP_402	mlb_noldo[19B6]
C1905	CAP_402	mlb_noldo[19B6]
C1906	CAP_402	mlb_noldo[19B6]
C1907	CAP_402	mlb_noldo[19B5]
C1910	CAP_603	mlb_noldo[19B8]
C1911	CAP_402	mlb_noldo[19B7]
C1912	CAP_603	mlb_noldo[19B8]
C1913	CAP_402	mlb_noldo[19B7]
C1914	CAP_603	mlb_noldo[19B6]
C1915	CAP_402	mlb_noldo[19B6]
C1916	CAP_402	mlb_noldo[19B6]
C1917	CAP_402	mlb_noldo[19B5]
C1918	CAP_402	mlb_noldo[19B5]
C1920	CAP_402	mlb_noldo[19A6]
C1921	FILTER_3P_A_NFM18	mlb_noldo[19A6]
C1922	CAP_402	mlb_noldo[19A6]
C1923	FILTER_3P_A_NFM18	mlb_noldo[19A6]
C1934	CAP_805	mlb_noldo[19C5]
C1935	CAP_402	mlb_noldo[19C5]
C1936	CAP_805	mlb_noldo[19C5]
C1937	CAP_402	mlb_noldo[19C5]
C1940	CAP_402	mlb_noldo[19C4]
C1941	CAP_402	mlb_noldo[19C3]
C1942	CAP_402	mlb_noldo[19C3]
C1950	CAP_402	mlb_noldo[19D6]
C1951	CAP_402	mlb_noldo[19D5]
C1952	CAP_603	mlb_noldo[19D5]
C1953	CAP_402	mlb_noldo[19D4]
C1954	CAP_402	mlb_noldo[19C4]
C1965	CAP_603	mlb_noldo[19B4]
C1966	CAP_603	mlb_noldo[19B4]
C1967	CAP_402	mlb_noldo[19B4]
C1970	CAP_P_SMB2	mlb_noldo[19A4]
C1971	CAP_603	mlb_noldo[19A3]
C1972	CAP_603	mlb_noldo[19A3]
C1975	CAP_603	mlb_noldo[19A3]
C1976	CAP_402	mlb_noldo[19A3]
C1980	CAP_402	mlb_noldo[19D2]
C1981	CAP_402	mlb_noldo[19D2]
C1985	CAP_402	mlb_noldo[19C2]
C1986	FILTER_3P_A_NFM18	mlb_noldo[19D2]
C1990	CAP_603	mlb_noldo[19C2]
C1991	CAP_402	mlb_noldo[19C2]
C1992	FILTER_3P_A_NFM18	mlb_noldo[19C2]
C1993	CAP_402	mlb_noldo[19B2]
C1994	FILTER_3P_A_NFM18	mlb_noldo[19B2]
C1995	CAP_402	mlb_noldo[19B2]
C1996	FILTER_3P_A_NFM18	mlb_noldo[19B2]
C1997	CAP_402	mlb_noldo[19A2]
C1998	FILTER_3P_A_NFM18	mlb_noldo[19A2]
C2500	CAP_P_SMB2	mlb_noldo[25B8]
C2501	CAP_402	mlb_noldo[25A6]
C2502	CAP_402	mlb_noldo[25D4]
C2503	CAP_402	mlb_noldo[25D8]
C2504	CAP_402	mlb_noldo[25C8]
C2505	CAP_402	mlb_noldo[25B7]
C2506	CAP_402	mlb_noldo[25B7]
C2507	CAP_402	mlb_noldo[25B7]
C2508	CAP_603	mlb_noldo[25A6]
C2509	CAP_402	mlb_noldo[25B8]
C2510	CAP_402	mlb_noldo[25C1]
C2511	CAP_402	mlb_noldo[25D6]
C2512	CAP_402	mlb_noldo[25B1]
C2513	CAP_402	mlb_noldo[25C6]
C2514	CAP_402	mlb_noldo[25C6]
C2515	CAP_402	mlb_noldo[25B6]
C2516	CAP_P_CASE-C2	mlb_noldo[25D3]
C2517	CAP_402	mlb_noldo[25D6]
C2518	CAP_402	mlb_noldo[25D4]
C2519	CAP_402	mlb_noldo[25D3]
C2520	CAP_402	mlb_noldo[25B6]
C2521	CAP_402	mlb_noldo[25C3]
C2522	CAP_402	mlb_noldo[25B3]
C2523	CAP_402	mlb_noldo[25B4]
C2524	CAP_603	mlb_noldo[25B3]
C2525	CAP_402	mlb_noldo[25B3]
C2526	CAP_402	mlb_noldo[25A4]
C2527	CAP_402	mlb_noldo[25A3]
C2528	CAP_402	mlb_noldo[25A3]
C2529	CAP_402	mlb_noldo[25A3]
C2530	CAP_402	mlb_noldo[25A3]
C2531	CAP_402	mlb_noldo[25D1]
C2532	CAP_402	mlb_noldo[25C1]
C2533	CAP_402	mlb_noldo[25C1]
C2534	CAP_402	mlb_noldo[25D1]
C2605	CAP_402	mlb_noldo[26D4]
C2607	CAP_402	mlb_noldo[26B5]
C2608	CAP_402	mlb_noldo[26C7]
C2609	CAP_402	mlb_noldo[26C7]
C2610	CAP_402	mlb_noldo[26D4]
C2611	CAP_402	mlb_noldo[26B8]
C2680	CAP_402	mlb_noldo[26B3]
C2800	CAP_402	mlb_noldo[28D7]
C2809	CAP_603	mlb_noldo[28B2]
C2810	CAP_402	mlb_noldo[28B2]
C2811	CAP_402	mlb_noldo[28B2]
C2812	CAP_402	mlb_noldo[28B1]
C2813	CAP_402	mlb_noldo[28B1]
C2814	CAP_402	mlb_noldo[28B2]
C2815	CAP_402	mlb_noldo[28B2]
C2816	CAP_402	mlb_noldo[28B1]
C2817	CAP_402	mlb_noldo[28B1]
C2820	CAP_402	mlb_noldo[28D7]
C2821	CAP_402	mlb_noldo[28A7]
C2822	CAP_402	mlb_noldo[28A7]
C2830	CAP_402	mlb_noldo[28B2]
C2831	CAP_402	mlb_noldo[28B2]
C2832	CAP_402	mlb_noldo[28B1]
C2900	CAP_402	mlb_noldo[29D7]
C2909	CAP_603	mlb_noldo[29B2]
C2910	CAP_402	mlb_noldo[29B2]
C2911	CAP_402	mlb_noldo[29B2]
C2912	CAP_402	mlb_noldo[29B1]
C2913	CAP_402	mlb_noldo[29B1]
C2914	CAP_402	mlb_noldo[29B2]
C2915	CAP_402	mlb_noldo[29B2]
C2916	CAP_402	mlb_noldo[29B1]
C2917	CAP_402	mlb_noldo[29B1]
C2920	CAP_402	mlb_noldo[29D7]
C2921	CAP_402	mlb_noldo[29A7]
C2922	CAP_402	mlb_noldo[29A7]
C2930	CAP_402	mlb_noldo[29B2]
C2931	CAP_402	mlb_noldo[29B2]
C2932	CAP_402	mlb_noldo[29B1]
C3000	CAP_402	mlb_noldo[30D4]
C3001	CAP_402	mlb_noldo[30D3]
C3002	CAP_402	mlb_noldo[30D4]
C3003	CAP_402	mlb_noldo[30D3]
C3004	CAP_402	mlb_noldo[30D4]
C3005	CAP_402	mlb_noldo[30D3]
C3006	CAP_402	mlb_noldo[30C4]
C3007	CAP_402	mlb_noldo[30C3]
C3008	CAP_402	mlb_noldo[30C4]
C3009	CAP_402	mlb_noldo[30C3]
C3010	CAP_402	mlb_noldo[30C4]
C3011	CAP_402	mlb_noldo[30C3]
C3012	CAP_402	mlb_noldo[30B4]
C3013	CAP_402	mlb_noldo[30B3]
C3014	CAP_402	mlb_noldo[30B4]
C3015	CAP_402	mlb_noldo[30B3]
C3016	CAP_402	mlb_noldo[30B4]
C3017	CAP_402	mlb_noldo[30B3]
C3018	CAP_402	mlb_noldo[30B4]
C3019	CAP_402	mlb_noldo[30B3]
C3020	CAP_402	mlb_noldo[30A4]
C3021	CAP_402	mlb_noldo[30A3]
C3022	CAP_402	mlb_noldo[30A4]
C3023	CAP_402	mlb_noldo[30A3]
C3024	CAP_402	mlb_noldo[30A4]
C3025	CAP_402	mlb_noldo[30A3]
C3100	CAP_402	mlb_noldo[31C4]
C3101	CAP_603	mlb_noldo[31B5]
C3102	CAP_603	mlb_noldo[31B3]
C3103	CAP_402	mlb_noldo[31B5]
C3104	CAP_603	mlb_noldo[31C4]
C3105	CAP_P_SMC-LF	mlb_noldo[31B4]
C3301	CAP_402	mlb_noldo[32D6]
C3302	CAP_402	mlb_noldo[32D6]
C3303	CAP_402	mlb_noldo[32D6]
C3304	CAP_402	mlb_noldo[32D6]
C3305	CAP_402	mlb_noldo[32D4]
C3306	CAP_402	mlb_noldo[32D4]
C3307	CAP_402	mlb_noldo[32C4]
C3308	CAP_402	mlb_noldo[32D4]
C3309	CAP_603	mlb_noldo[32D4]
C3310	CAP_402	mlb_noldo[32D3]
C3311	CAP_402	mlb_noldo[32C6]
C3312	CAP_603	mlb_noldo[32C6]
C3314	CAP_402	mlb_noldo[32D8]
C3315	CAP_402	mlb_noldo[32D7]
C3316	CAP_603	mlb_noldo[32D7]
C3317	CAP_603	mlb_noldo[32D4]
C3389	CAP_402	mlb_noldo[32C7]
C3390	CAP_402	mlb_noldo[32C7]
C3804	CAP_402	mlb_noldo[34B5]
C3805	CAP_402	mlb_noldo[34B3]
C3806	CAP_603	mlb_noldo[34B3]
C3875	CAP_402	mlb_noldo[34C7]
C3876	CAP_402	mlb_noldo[34C5]
C3900	CAP_402	mlb_noldo[35D6]
C3901	CAP_402	mlb_noldo[35D5]
C3902	CAP_402	mlb_noldo[35C6]
C3903	CAP_402	mlb_noldo[35D5]
C3920	CAP_402	mlb_noldo[35C7]
C3921	CAP_603	mlb_noldo[35C6]
C3922	CAP_402	mlb_noldo[35C5]
C3923	CAP_402	mlb_noldo[35C6]
C3950	CAP_603	mlb_noldo[35B8]
C4100	CAP_402	mlb_noldo[36D6]
C4101	CAP_402	mlb_noldo[36D6]
C4102	CAP_402	mlb_noldo[36D5]
C4103	CAP_402	mlb_noldo[36D5]
C4104	CAP_402	mlb_noldo[36D5]
C4105	CAP_402	mlb_noldo[36D5]
C4106	CAP_402	mlb_noldo[36D4]
C4107	CAP_402	mlb_noldo[36D4]
C4110	CAP_402	mlb_noldo[36D5]
C4111	CAP_402	mlb_noldo[36D5]
C4112	CAP_402	mlb_noldo[36C5]
C4113	CAP_402	mlb_noldo[36C5]
C4115	CAP_402	mlb_noldo[36B4]
C4116	CAP_402	mlb_noldo[36B4]
C4117	CAP_402	mlb_noldo[36B3]
C4118	CAP_402	mlb_noldo[36B3]
C4126	CAP_402	mlb_noldo[36A8]
C4127	CAP_402	mlb_noldo[36A8]
C4128	CAP_402	mlb_noldo[36A7]
C4129	CAP_402	mlb_noldo[36A7]
C4130	CAP_402	mlb_noldo[36A7]
C4131	CAP_402	mlb_noldo[36A6]
C4132	CAP_402	mlb_noldo[36A6]
C4133	CAP_402	mlb_noldo[36A6]
C4134	CAP_402	mlb_noldo[36A6]
C4135	CAP_402	mlb_noldo[36A5]
C4136	CAP_402	mlb_noldo[36A5]
C4137	CAP_402	mlb_noldo[36A4]
C4138	CAP_402	mlb_noldo[36A4]
C4139	CAP_402	mlb_noldo[36A4]
C4140	CAP_402	mlb_noldo[36B3]
C4150	CAP_402	mlb_noldo[36B6]
C4151	CAP_402	mlb_noldo[36B6]
C4200	CAP_402	mlb_noldo[37C7]
C4201	CAP_402	mlb_noldo[37C6]
C4202	CAP_402	mlb_noldo[37C6]
C4203	CAP_402	mlb_noldo[37C6]
C4204	CAP_402	mlb_noldo[37C7]
C4205	CAP_402	mlb_noldo[37C6]
C4206	CAP_402	mlb_noldo[37C6]
C4207	CAP_402	mlb_noldo[37C6]
C4210	CAP_1808	mlb_noldo[37A6]
C4211	CAP_402	mlb_noldo[37A6]
C4212	CAP_402	mlb_noldo[37A5]
C4411	CAP_402	mlb_noldo[38C2]
C4412	CAP_402	mlb_noldo[38C2]
C4416	CAP_603	mlb_noldo[38D4]
C4417	CAP_402	mlb_noldo[38D4]
C4418	CAP_402	mlb_noldo[38D4]
C4420	CAP_402	mlb_noldo[38C3]
C4422	CAP_402	mlb_noldo[38D4]
C4424	CAP_603	mlb_noldo[38D5]
C4425	CAP_402	mlb_noldo[38D3]
C4426	CAP_402	mlb_noldo[38D4]
C4428	CAP_402	mlb_noldo[38D3]
C4429	CAP_402	mlb_noldo[38D3]
C4430	CAP_402	mlb_noldo[38D3]
C4432	CAP_402	mlb_noldo[38D3]
C4500	CAP_402	mlb_noldo[39B5]
C4501	CAP_402	mlb_noldo[39A5]
C4519	CAP_402	mlb_noldo[39C3]
C4520	CAP_402	mlb_noldo[39B4]
C4521	CAP_402	mlb_noldo[39B3]
C4522	CAP_402	mlb_noldo[39A4]
C4523	CAP_402	mlb_noldo[39A3]
C4524	CAP_603-1	mlb_noldo[39A2]
C4525	CAP_402	mlb_noldo[39A2]
C4551	CAP_402	mlb_noldo[39A7]
C4552	CAP_402	mlb_noldo[39A7]
C4590	CAP_402	mlb_noldo[39C5]
C4900	CAP_402	mlb_noldo[40C4]
C4910	CAP_402	mlb_noldo[40C6]
C5100	CAP_402	mlb_noldo[41D6]
C5101	CAP_402	mlb_noldo[41D6]
C5102	CAP_402	mlb_noldo[41B5]
C5202	CAP_402	mlb_noldo[42C2]
C5203	CAP_402	mlb_noldo[42C2]
C5206	CAP_402	mlb_noldo[42B2]
C5207	CAP_402	mlb_noldo[42B2]
C5208	CAP_402	mlb_noldo[42C6]
C5209	CAP_402	mlb_noldo[42B6]
C5210	CAP_P_B2	mlb_noldo[42C6]
C5211	CAP_P_B2	mlb_noldo[42B6]
C5212	CAP_402	mlb_noldo[42C8]
C5213	CAP_603	mlb_noldo[42C8]
C5250	CAP_402	mlb_noldo[42C8]
C5251	CAP_402	mlb_noldo[42B8]
C5300	CAP_402	mlb_noldo[43B6]
C5301	CAP_402	mlb_noldo[43B6]
C5304	CAP_402	mlb_noldo[43D4]
C5305	CAP_402	mlb_noldo[43D4]
C5306	CAP_402	mlb_noldo[43D4]
C5307	CAP_402	mlb_noldo[43C4]
C5308	CAP_402	mlb_noldo[43C4]
C5309	CAP_603	mlb_noldo[43C3]
C5310	CAP_402	mlb_noldo[43C3]
C5498	CAP_402	mlb_noldo[44C5]
C5499	CAP_603	mlb_noldo[44C5]
C5802	CAP_805	mlb_noldo[45D3]
C5803	CAP_402	mlb_noldo[45D2]
C5804	CAP_402	mlb_noldo[45D2]
C5805	CAP_402	mlb_noldo[45D2]
C5806	CAP_402	mlb_noldo[45D1]
C5807	CAP_402	mlb_noldo[45D2]
C5820	CAP_402	mlb_noldo[45C3]
C5900	CAP_402	mlb_noldo[46D8]
C5901	CAP_402	mlb_noldo[46D8]
C5910	CAP_603	mlb_noldo[46A7]
C5911	CAP_402	mlb_noldo[46A7]
C5920	CAP_402	mlb_noldo[46C6]
C5921	CAP_402	mlb_noldo[46C6]
C5951	CAP_402	mlb_noldo[46A4]
C5965	CAP_402	mlb_noldo[46B8]
C5966	CAP_603	mlb_noldo[46B7]
C5967	CAP_402	mlb_noldo[46B7]
C5977	CAP_402	mlb_noldo[46C2]
C6100	CAP_402	mlb_noldo[48D3]
C6101	CAP_402	mlb_noldo[48C3]
C6102	CAP_402	mlb_noldo[48C2]
C6103	CAP_402	mlb_noldo[48C3]
C6104	CAP_402	mlb_noldo[48D4]
C6105	CAP_402	mlb_noldo[48C4]
C6112	CAP_402	mlb_noldo[48B2]
C6150	CAP_402	mlb_noldo[48C6]
C6200	CAP_402	mlb_noldo[49C5]
C6201	CAP_402	mlb_noldo[49C5]
C6202	CAP_402	mlb_noldo[49D4]
C6250	CAP_402	mlb_noldo[49B5]
C6251	CAP_402	mlb_noldo[49A5]
C6252	CAP_402	mlb_noldo[49B4]
C6301	CAP_402	mlb_noldo[50C2]
C6308	CAP_402	mlb_noldo[50C5]
C6309	CAP_402	mlb_noldo[50C6]
C6311	CAP_402	mlb_noldo[50C2]
C6312	CAP_402	mlb_noldo[50D3]
C6604	CAP_402	mlb_noldo[52B4]
C6605	CAP_402	mlb_noldo[52B4]
C6606	CAP_402	mlb_noldo[52B4]
C6620	CAP_402	mlb_noldo[52C4]
C6700	CAP_402	mlb_noldo[53C4]
C6701	CAP_402	mlb_noldo[53C4]
C6702	CAP_402	mlb_noldo[53C3]
C6703	CAP_402	mlb_noldo[53C3]
C6795	CAP_402	mlb_noldo[53C6]
C6796	CAP_402	mlb_noldo[53B6]
C6800	CAP_603	mlb_noldo[54D6]
C6801	CAP_402	mlb_noldo[54D6]
C6802	CAP_P_CASE-B3-LF	mlb_noldo[54D4]
C6803	CAP_P_CASE-B3-LF	mlb_noldo[54D3]
C6804	CAP_P_SMA-LF	mlb_noldo[54B4]
C6805	CAP_603	mlb_noldo[54B4]
C6806	CAP_603	mlb_noldo[54B3]
C6807	CAP_P_SMA-LF	mlb_noldo[54B3]
C6810	CAP_P_SMA-LF	mlb_noldo[54B3]
C6812	CAP_402	mlb_noldo[54B4]
C6813	CAP_402	mlb_noldo[54B3]
C6821	CAP_402	mlb_noldo[54C6]
C6822	CAP_603	mlb_noldo[54A5]
C6823	CAP_402	mlb_noldo[54A5]
C6825	CAP_402	mlb_noldo[54A4]
C6830	CAP_402	mlb_noldo[54D4]
C6833	CAP_402	mlb_noldo[54B2]
C6835	CAP_402	mlb_noldo[54D6]
C6836	CAP_402	mlb_noldo[54D3]
C6853	CAP_402	mlb_noldo[54B4]
C7200	CAP_P_SMC-LF	mlb_noldo[55D6]
C7201	CAP_P_CASE-B3-LF	mlb_noldo[55C4]
C7202	CAP_603	mlb_noldo[55C4]
C7203	CAP_P_CASE-B3-LF	mlb_noldo[55B4]
C7204	CAP_603	mlb_noldo[55B4]
C7205	CAP_P_CASE-B2	mlb_noldo[55B4]
C7206	CAP_603	mlb_noldo[55B4]
C7207	CAP_402	mlb_noldo[55C5]
C7208	CAP_402	mlb_noldo[55B5]
C7209	CAP_402	mlb_noldo[55A5]
C7210	CAP_402	mlb_noldo[55C6]
C7211	CAP_402	mlb_noldo[55C5]
C7220	CAP_402	mlb_noldo[55B6]
C7221	CAP_402	mlb_noldo[55B5]
C7230	CAP_402	mlb_noldo[55A6]
C7231	CAP_402	mlb_noldo[55A5]
C7260	CAP_402	mlb_noldo[55D2]
C7261	CAP_402	mlb_noldo[55C2]
C7270	CAP_402	mlb_noldo[55C2]
C7271	CAP_402	mlb_noldo[55B2]
C7280	CAP_402	mlb_noldo[55B2]
C7281	CAP_402	mlb_noldo[55B2]
C7300	CAP_402	mlb_noldo[56C7]
C7301	CAP_402	mlb_noldo[56C5]
C7302	CAP_402	mlb_noldo[56C5]
C7303	CAP_402	mlb_noldo[56C5]
C7304	CAP_402	mlb_noldo[56C5]
C7305	CAP_402	mlb_noldo[56C5]
C7306	CAP_402	mlb_noldo[56C8]
C7307	CAP_402	mlb_noldo[56C6]
C7308	CAP_402	mlb_noldo[56C6]
C7350	CAP_402	mlb_noldo[56A7]
C7351	CAP_603	mlb_noldo[56A7]
C7352	CAP_402	mlb_noldo[56A5]
C7353	CAP_402	mlb_noldo[56A5]
C7354	CAP_402	mlb_noldo[56A5]
C7355	CAP_402	mlb_noldo[56A5]
C7356	CAP_402	mlb_noldo[56A5]
C7357	CAP_402	mlb_noldo[56A8]
C7370	CAP_402	mlb_noldo[56A2]
C7371	CAP_402	mlb_noldo[56A2]
C7372	CAP_402	mlb_noldo[56A1]
C7400	CAP_402	mlb_noldo[57B4]
C7401	CAP_402	mlb_noldo[57D7]
C7402	CAP_402	mlb_noldo[57C7]
C7404	CAP_402	mlb_noldo[57C4]
C7411	CAP_402	mlb_noldo[57B7]
C7412	CAP_402	mlb_noldo[57B6]
C7414	CAP_402	mlb_noldo[57C4]
C7430	CAP_P_B2	mlb_noldo[57D2]
C7431	CAP_P_B2	mlb_noldo[57C2]
C7432	CAP_805-1	mlb_noldo[57B2]
C7433	CAP_805-1	mlb_noldo[57A2]
C7435	CAP_402	mlb_noldo[57B1]
C7440	CAP_402	mlb_noldo[57A4]
C7441	CAP_402	mlb_noldo[57A4]
C7445	CAP_402	mlb_noldo[57A3]
C7446	CAP_402	mlb_noldo[57A3]
C7447	CAP_402	mlb_noldo[57A3]
C7450	CAP_402	mlb_noldo[57A6]
C7451	CAP_402	mlb_noldo[57A7]
C7452	CAP_402	mlb_noldo[57A6]
C7500	CAP_402	mlb_noldo[58C4]
C7501	CAP_P_CASED2E-SM	mlb_noldo[58C3]
C7502	CAP_402	mlb_noldo[58B4]
C7503	CAP_402	mlb_noldo[58C2]
C7504	CAP_402	mlb_noldo[58B2]
C7505	CAP_402	mlb_noldo[58C8]
C7506	CAP_402	mlb_noldo[58B8]

C7507	CAP_402	mlb_noldo[58B7]
C7508	CAP_P_CASED2E-SM	mlb_noldo[58C3]
C7509	CAP_P_CASED2E-SM	mlb_noldo[58D3]
C7510	CAP_402	mlb_noldo[58C8]
C7511	CAP_402	mlb_noldo[58B3]
C7512	CAP_402	mlb_noldo[58C3]
C7513	CAP_402	mlb_noldo[58B7]
C7514	CAP_402	mlb_noldo[58B8]
C7515	CAP_402	mlb_noldo[58C5]
C7516	CAP_402	mlb_noldo[58B4]
C7517	CAP_P_CASED2E-SM	mlb_noldo[58D3]
C7518	CAP_603	mlb_noldo[58D2]
C7521	CAP_402	mlb_noldo[58A6]
C7526	CAP_603	mlb_noldo[58D7]
C7527	CAP_402	mlb_noldo[58C5]
C7528	CAP_402	mlb_noldo[58B5]
C7529	CAP_402	mlb_noldo[58B5]
C7530	CAP_402	mlb_noldo[58C7]
C7531	CAP_402	mlb_noldo[58B5]
C7532	CAP_402	mlb_noldo[58B6]
C7533	CAP_402	mlb_noldo[58B6]
C7534	CAP_402	mlb_noldo[58B5]
C7535	CAP_603	mlb_noldo[58D6]
C7590	CAP_402	mlb_noldo[58C3]
C7592	CAP_402	mlb_noldo[58B3]
C7596	CAP_402	mlb_noldo[58D7]
C7599	CAP_603	mlb_noldo[58C2]
C7600	CAP_603	mlb_noldo[59C4]
C7601	CAP_603	mlb_noldo[59A4]
C7602	CAP_402	mlb_noldo[59A4]
C7604	CAP_402	mlb_noldo[59A2]
C7605	CAP_402	mlb_noldo[59A5]
C7607	CAP_402	mlb_noldo[59A3]
C7608	CAP_402	mlb_noldo[59D2]
C7609	CAP_402	mlb_noldo[59D7]
C7621	CAP_402	mlb_noldo[59B6]
C7622	CAP_402	mlb_noldo[59C5]
C7624	CAP_402	mlb_noldo[59C6]
C7625	CAP_402	mlb_noldo[59B6]
C7626	CAP_402	mlb_noldo[59B6]
C7628	CAP_402	mlb_noldo[59B7]
C7629	CAP_402	mlb_noldo[59B7]
C7630	CAP_402	mlb_noldo[59B5]
C7631	CAP_402	mlb_noldo[59C7]
C7632	CAP_402	mlb_noldo[59C2]
C7640	CAP_P_CASED2E-SM	mlb_noldo[59D6]
C7641	CAP_603	mlb_noldo[59D6]
C7650	CAP_805	mlb_noldo[59B7]
C7651	CAP_805	mlb_noldo[59B8]
C7652	CAP_P_SMC-LF	mlb_noldo[59B8]
C7661	CAP_402	mlb_noldo[59B3]
C7662	CAP_402	mlb_noldo[59C4]
C7664	CAP_402	mlb_noldo[59C3]
C7665	CAP_402	mlb_noldo[59B4]
C7666	CAP_402	mlb_noldo[59B3]
C7668	CAP_402	mlb_noldo[59B2]
C7669	CAP_402	mlb_noldo[59B2]
C7670	CAP_402	mlb_noldo[59B4]
C7680	CAP_P_CASED2E-SM	mlb_noldo[59D3]
C7681	CAP_603	mlb_noldo[59D4]
C7689	CAP_402	mlb_noldo[59B4]
C7690	CAP_805	mlb_noldo[59B2]
C7691	CAP_805	mlb_noldo[59B1]
C7692	CAP_P_SMC-LF	mlb_noldo[59B1]
C7700	CAP_603	mlb_noldo[60C4]
C7701	CAP_402	mlb_noldo[60C3]
C7702	CAP_603	mlb_noldo[60C3]
C7703	CAP_603	mlb_noldo[60C4]
C7704	CAP_402	mlb_noldo[60C3]
C7705	CAP_603	mlb_noldo[60C3]
C7720	CAP_402	mlb_noldo[60B4]
C7721	CAP_603	mlb_noldo[60B3]
C7750	CAP_402	mlb_noldo[60C6]
C7800	CAP_603	mlb_noldo[61C5]
C7801	CAP_603	mlb_noldo[61C6]
C7802	CAP_603	mlb_noldo[61C5]
C7803	CAP_402	mlb_noldo[61B2]
C7804	CAP_402	mlb_noldo[61C2]
C7805	CAP_402	mlb_noldo[61C2]
C7806	CAP_402	mlb_noldo[61B7]
C7807	CAP_402	mlb_noldo[61B6]
C7808	CAP_402	mlb_noldo[61B6]
C7809	CAP_402	mlb_noldo[61C4]
C7810	CAP_402	mlb_noldo[61B4]
C7830	CAP_P_CASED2E-SM	mlb_noldo[61C4]
C7831	CAP_603	mlb_noldo[61C4]
C7840	CAP_805	mlb_noldo[61B3]
C7841	CAP_805	mlb_noldo[61B3]
C7842	CAP_P_CASE-D2E-LF	mlb_noldo[61B3]
C7843	CAP_P_CASE-D2E-LF	mlb_noldo[61B2]
C7864	CAP_402	mlb_noldo[61C2]
C7900	CAP_603	mlb_noldo[62C4]
C7901	CAP_603	mlb_noldo[62A4]
C7902	CAP_402	mlb_noldo[62A4]
C7903	CAP_402	mlb_noldo[62A6]
C7904	CAP_402	mlb_noldo[62A2]
C7905	CAP_402	mlb_noldo[62A5]
C7906	CAP_402	mlb_noldo[62A6]
C7907	CAP_402	mlb_noldo[62A3]
C7908	CAP_402	mlb_noldo[62D2]
C7909	CAP_402	mlb_noldo[62C7]
C7921	CAP_402	mlb_noldo[62B6]
C7922	CAP_402	mlb_noldo[62C5]
C7924	CAP_402	mlb_noldo[62C6]
C7925	CAP_402	mlb_noldo[62B6]
C7926	CAP_402	mlb_noldo[62B6]
C7928	CAP_402	mlb_noldo[62B7]
C7929	CAP_402	mlb_noldo[62B7]
C7930	CAP_402	mlb_noldo[62B5]
C7931	CAP_402	mlb_noldo[62C7]
C7932	CAP_402	mlb_noldo[62C2]
C7940	CAP_P_CASED2E-SM	mlb_noldo[62C6]
C7941	CAP_603	mlb_noldo[62C6]
C7950	CAP_805	mlb_noldo[62B8]
C7952	CAP_P_CASE-D2E-LF	mlb_noldo[62B8]
C7961	CAP_402	mlb_noldo[62B3]
C7962	CAP_402	mlb_noldo[62C4]
C7964	CAP_402	mlb_noldo[62C3]
C7965	CAP_402	mlb_noldo[62B3]
C7966	CAP_402	mlb_noldo[62B3]
C7968	CAP_402	mlb_noldo[62B2]
C7969	CAP_402	mlb_noldo[62B2]
C7970	CAP_402	mlb_noldo[62B4]
C7980	CAP_P_CASED2E-SM	mlb_noldo[62C4]
C7981	CAP_603	mlb_noldo[62C4]
C7989	CAP_402	mlb_noldo[62B4]
C7990	CAP_805	mlb_noldo[62A7]
C7991	CAP_805	mlb_noldo[62A7]
C7992	CAP_P_CASE-D2E-LF	mlb_noldo[62B1]
C7999	CAP_402	mlb_noldo[62A6]
C8000	CAP_402	mlb_noldo[63D4]
C8005	CAP_402	mlb_noldo[63C4]
C8010	CAP_402	mlb_noldo[63C4]
C8015	CAP_402	mlb_noldo[63B4]
C8025	CAP_402	mlb_noldo[63A4]
C8060	CAP_402	mlb_noldo[63B3]
C8061	CAP_402	mlb_noldo[63B2]
C8062	CAP_402	mlb_noldo[63B2]
C8090	CAP_1206-1	mlb_noldo[63C3]
C8091	CAP_402	mlb_noldo[63D2]
C8092	CAP_402	mlb_noldo[63D1]
C8093	CAP_805	mlb_noldo[63D1]
C8202	CAP_402	mlb_noldo[65D7]
C8203	CAP_402	mlb_noldo[65C7]
C8205	CAP_402	mlb_noldo[65A5]
C8206	CAP_402	mlb_noldo[65A4]
C8209	CAP_402	mlb_noldo[65A5]
C8211	CAP_402	mlb_noldo[65A5]
C8215	CAP_402	mlb_noldo[65A4]
C8217	CAP_603	mlb_noldo[65C2]
C8218	CAP_402	mlb_noldo[65C4]
C8220	CAP_402	mlb_noldo[65A7]
C8221	CAP_402	mlb_noldo[65A7]
C8230	CAP_402	mlb_noldo[65C6]
C8300	CAP_402	mlb_noldo[66C7]
C8301	CAP_402	mlb_noldo[66C7]
C8302	CAP_402	mlb_noldo[66C7]
C8303	CAP_402	mlb_noldo[66C4]
C8304	CAP_402	mlb_noldo[66C5]
C8305	CAP_1206-1	mlb_noldo[66C4]
C8306	CAP_1206-1	mlb_noldo[66C3]
C8307	CAP_1206-1	mlb_noldo[66C3]
C8308	CAP_P_CASED2E-SM	mlb_noldo[66B4]
C8309	CAP_P_6.3X5.5SM1	mlb_noldo[66B3]
C8310	CAP_P_CASED2E-SM	mlb_noldo[66B3]
C8311	CAP_402	mlb_noldo[66C7]
C8312	CAP_402	mlb_noldo[66C5]
C8313	CAP_402	mlb_noldo[66C6]
C8316	CAP_402	mlb_noldo[66B4]
C8317	CAP_402	mlb_noldo[66B5]
C8318	CAP_402	mlb_noldo[66B4]
C8320	CAP_402	mlb_noldo[66B5]
C8321	CAP_402	mlb_noldo[66B5]
C8322	CAP_402	mlb_noldo[66B4]
C8323	CAP_402	mlb_noldo[66A5]
C8324	CAP_402	mlb_noldo[66A4]
C8325	CAP_402	mlb_noldo[66C7]
C8326	CAP_402	mlb_noldo[66C7]
C8327	CAP_402	mlb_noldo[66D7]
C8328	CAP_402	mlb_noldo[66B6]
C8340	CAP_402	mlb_noldo[66C7]
C8341	CAP_402	mlb_noldo[66B8]
C8370	CAP_402	mlb_noldo[66C3]
C8371	CAP_402	mlb_noldo[66C2]
C8372	CAP_402	mlb_noldo[66B1]
C8375	CAP_402	mlb_noldo[66B3]
C8381	CAP_603	mlb_noldo[66B3]
C9400	CAP_402	mlb_noldo[67C3]
C9401	CAP_402	mlb_noldo[67C3]
C9402	CAP_402	mlb_noldo[67C3]
C9403	CAP_402	mlb_noldo[67C3]
C9408	CAP_402	mlb_noldo[67A3]
C9409	CAP_402	mlb_noldo[67B2]
C9410	CAP_402	mlb_noldo[67A3]
C9411	CAP_402	mlb_noldo[67B5]
C9412	CAP_603	mlb_noldo[67B5]
C9413	CAP_402	mlb_noldo[67B6]
C9414	CAP_402	mlb_noldo[67D5]
C9415	CAP_402	mlb_noldo[67A3]
C9416	CAP_402	mlb_noldo[67A4]
C9459	CAP_402	mlb_noldo[67C5]
C9500	CAP_402	mlb_noldo[68D5]
C9501	CAP_402	mlb_noldo[68D4]
C9502	CAP_402	mlb_noldo[68D4]
C9503	CAP_402	mlb_noldo[68D4]
C9504	CAP_603	mlb_noldo[68D4]
C9505	CAP_603	mlb_noldo[68B2]
C9506	CAP_402	mlb_noldo[68C7]
C9507	CAP_402	mlb_noldo[68D5]
C9508	CAP_402	mlb_noldo[68D5]
C9509	CAP_402	mlb_noldo[68D4]
C9510	CAP_402	mlb_noldo[68D4]
C9511	CAP_402	mlb_noldo[68D4]
C9512	CAP_402	mlb_noldo[68D3]
C9513	CAP_603	mlb_noldo[68D3]
C9514	CAP_402	mlb_noldo[68D7]
C9519	CAP_402	mlb_noldo[68B6]
C9520	CAP_402	mlb_noldo[68B6]
C9521	CAP_402	mlb_noldo[68B3]
C9522	CAP_402	mlb_noldo[68D2]
C9523	CAP_402	mlb_noldo[68D2]
C9524	CAP_402	mlb_noldo[68C2]
C9525	CAP_402	mlb_noldo[68C2]
C9526	CAP_402	mlb_noldo[68C3]
C9527	CAP_402	mlb_noldo[68C1]
C9530	CAP_402	mlb_noldo[68D7]
C9531	CAP_402	mlb_noldo[68D7]
C9532	CAP_402	mlb_noldo[68C7]
C9533	CAP_402	mlb_noldo[68C7]
C9534	CAP_402	mlb_noldo[68C7]
C9535	CAP_402	mlb_noldo[68C7]
C9536	CAP_402	mlb_noldo[68D7]
C9537	CAP_402	mlb_noldo[68D7]
C9538	CAP_402	mlb_noldo[68D7]
C9539	CAP_402	mlb_noldo[68D7]
C9540	CAP_603	mlb_noldo[68D6]
C9541	CAP_402	mlb_noldo[68B5]
C9542	CAP_402	mlb_noldo[68B5]
C9543	CAP_402	mlb_noldo[68B5]
C9544	CAP_402	mlb_noldo[68B5]
C9545	CAP_402	mlb_noldo[68B5]
C9546	CAP_402	mlb_noldo[68B4]
C9547	CAP_402	mlb_noldo[68B4]
C9548	CAP_402	mlb_noldo[68B4]
C9804	CAP_402	mlb_noldo[69C4]
C9808	CAP_402	mlb_noldo[69C5]
C9809	CAP_402	mlb_noldo[69B5]
C9812	CAP_402	mlb_noldo[69B5]
C9820	CAP_402	mlb_noldo[69A4]
C9821	CAP_402	mlb_noldo[69A3]
C9824	CAP_402	mlb_noldo[69B5]
C9834	CAP_402	mlb_noldo[69A4]
C9839	CAP_402	mlb_noldo[69B7]
C9842	CAP_402	mlb_noldo[69C1]
C9843	CAP_402	mlb_noldo[69C1]
C9860	CAP_402	mlb_noldo[69C2]
D1986	DIODE_SCHOT_6PB_SOT-363	mlb_noldo[19C2 19D2]
D2502	DIODE_SCHOT_6PB_SOT-363	mlb_noldo[25C8 25D8]
D2600	DIODE_SCHOT_6PB_SOT-363	mlb_noldo[26D5 26D5]
D4520	DIODE_DUAL_6P_SOT-363	mlb_noldo[39B4 39B3]
D4521	DIODE_DUAL_6P_SOT-363	mlb_noldo[39A4 39A3]
D4550	ZENER_SOT23	mlb_noldo[39A6]
D4590	DIODE_SCHOT_SMB	mlb_noldo[39D4]
D4591	DPAK3P_SOT-363	mlb_noldo[39C5 39C5 39C5]
D4900	DIODE_SCHOT_3P_A_SC-75	mlb_noldo[40C6]
D5200	DIODE_SCHOT_3P_A_SC-75	mlb_noldo[42C3]
D5201	DIODE_SCHOT_3P_A_SC-75	mlb_noldo[42A3]
D7500	DIODE_SCHOT_SMB	mlb_noldo[58C3]
D7501	DIODE_SCHOT_SMB	mlb_noldo[58B3]
D7624	DIODE_SCHOT_SOD-323	mlb_noldo[59C6]
D7664	DIODE_SCHOT_SOD-323	mlb_noldo[59C3]
D7820	DIODE_SCHOT_SMB	mlb_noldo[61B4]
D7921	DIODE_SMB	mlb_noldo[62B7]
D7924	DIODE_SCHOT_SOD-323	mlb_noldo[62C6]
D7961	DIODE_SMB	mlb_noldo[62B2]
D7964	DIODE_SCHOT_SOD-323	mlb_noldo[62C3]
D8200	RCLAMP2402B_SC-75	mlb_noldo[65C7]
D8201	DPAK3P_SOT-363	mlb_noldo[65D4]
D8201	DPAK3P_SOT-363	mlb_noldo[66B3]
D8300	DIODE_SCHOT_SOD-123	mlb_noldo[66C5]
D8322	DPAK3P_SOT-363	mlb_noldo[66C8 66A5 66A6]
D9500	DIODE_DUAL_6P_SOT-363	mlb_noldo[68A7 68B7]
DZ7300	SUPPR_TRANSIENT_4P1_0405	mlb_noldo[56C6]
DZ7301	SUPPR_TRANSIENT_4P1_0405	mlb_noldo[56C6]
DZ7350	SUPPR_TRANSIENT_4P1_0405	mlb_noldo[56A6]
DZ7351	SUPPR_TRANSIENT_4P1_0405	mlb_noldo[56A6]
F8200	FUSE_1206	mlb_noldo[65D6]
F8300	FUSE_1206	mlb_noldo[66C3]
F9804	FUSE_SM-LF	mlb_noldo[69C5]
FL4520	FILTER_4P_2012	mlb_noldo[39B3]
FL4521	FILTER_4P_2012	mlb_noldo[39B3]
FL4590	FUSE_MINISMDC	mlb_noldo[39D6]
FL9800	FILTER_LC_SM-220MHZ-LF	mlb_noldo[69B5]
FL9801	FILTER_LC_SM-220MHZ-LF	mlb_noldo[69A5]
FL9802	FILTER_LC_SM-220MHZ-LF	mlb_noldo[69A5]
GV3901	HOLE_VIA	mlb_noldo[35C2]
GV3902	HOLE_VIA	mlb_noldo[35C2]
GV3903	HOLE_VIA	mlb_noldo[35C2]
GV3904	HOLE_VIA	mlb_noldo[35C2]
GV3905	HOLE_VIA	mlb_noldo[35B2]
GV3906	HOLE_VIA	mlb_noldo[35B2]
GV3907	HOLE_VIA	mlb_noldo[35B2]
GV3908	HOLE_VIA	mlb_noldo[35B2]
J1102	CON_F30STSM_5047_SM1	mlb_noldo[11B2]
J2600	CON_F2RT_S2MT_SM_F-RT-SM	mlb_noldo[26D6]
J2801	CON_E200RT_DDR2DIMM_TH1_F-RT-TH2	mlb_noldo[28D6]
J2901	CON_F200RT_DDR2DIMM_TH1_F-RT-TH2	mlb_noldo[29D5]
J3801	CON_M50ST_D2MT_SM_M-ST-SM	mlb_noldo[34C4]
J3901	CON_F19ST_S2MT_SM_F-ST-SM	mlb_noldo[35D8]
J4200	CON_RJ45_8RT_S2MT_SM_F-RT-SM	mlb_noldo[37C2]
J4500	CON_F6RT_S2MT_TH_F-RT-TH1	mlb_noldo[39B2]
J4900	CON_F10ST_D_SMA_F-ST-SM	mlb_noldo[40C4]
J5200	CON_F4RT_USB_S2MT_TH_F-RT-TH-M42	mlb_noldo[42D1]
J5201	CON_F4RT_USB_S2MT_TH_F-RT-TH-M42	mlb_noldo[42B1]
J5300	CON_F52RT_D2MT_SM_F-ST-SM	mlb_noldo[43C5]
J5400	CON_F4ST_S2MT_SM_F-ST-SM	mlb_noldo[44C4]
J6000	CON_F30STSM_5047_SM1	mlb_noldo[47C6]
J6250	CON_M2RT_S2MT_SM_M-RT-SM	mlb_noldo[49C6]
J6251	CON_M2RT_S2MT_SM_M-RT-SM	mlb_noldo[49A6]
J6501	CON_F4ST_S2MT_SM_F-ST-SM	mlb_noldo[51C3]
J7300	CON_F8RT_2MT_AUDIOOUT_TH_F-RT-TH	mlb_noldo[56C8]
J7301	CON_M3RT_S2MT_SM_M-RT-SM1	mlb_noldo[56D1]
J7302	CON_F2ST_S2MT_SM_F-ST-SM	mlb_noldo[56D1]
J7303	CON_F4ST_S2MT_SM_F-ST-SM	mlb_noldo[56C1]
J7350	CON_F8RT_2MT_AUDIOIN_TH_F-RT-TH	mlb_noldo[56B8]
J8200	CON_M5RT_S_SM_M-RT-SM	mlb_noldo[65D7]
J8250	CON_F20ST_D_SM_F-ST-SM1	mlb_noldo[65B6]
J9400	CON_F4ST_S2MT_SM_F-ST-SM	mlb_noldo[67D2]
J9401	CON_F2RT_S4MT_SM_F-RT-SM	mlb_noldo[67B1]
J9801	CON_DVI_30RT_Q4MT_TH_1_RT-TH	mlb_noldo[69B4]
L1922	IND_0603	mlb_noldo[19A7]
L1934	IND_0603	mlb_noldo[19C5]
L1936	IND_0603	mlb_noldo[19C5]
L1970	IND_1210	mlb_noldo[19B4]
L1975	IND_0805	mlb_noldo[19A4]
L1985	IND_0603	mlb_noldo[19D3]
L1990	IND_0603	mlb_noldo[19C3]
L2500	IND_SM-3	mlb_noldo[25B8]
L2507	IND_1206	mlb_noldo[25A7]
L3301	IND_0402-LF	mlb_noldo[32D7]
L3302	IND_0402-LF	mlb_noldo[32D3]
L3901	FILTER_4P_2012H	mlb_noldo[35D6]
L3902	FILTER_4P_2012H	mlb_noldo[35D5]
L3912	IND_0402	mlb_noldo[35C6]
L4100	IND_0402-LF	mlb_noldo[36D3]
L4250	IND_0402-LF	mlb_noldo[37D7]
L4400	IND_0402	mlb_noldo[38D4]
L4510	IND_SM	mlb_noldo[39C3]
L4550	IND_SM-1	mlb_noldo[39A7]
L4900	IND_0402	mlb_noldo[40D5]
L4901	FILTER_4P_SM	mlb_noldo[40C6]
L4902	IND_0402	mlb_noldo[40C5]
L5200	FILTER_4P_SM	mlb_noldo[42C4]
L5201	FILTER_4P_SM	mlb_noldo[42B4]
L5202	IND_0402-LF	mlb_noldo[42D4]
L5203	IND_0402-LF	mlb_noldo[42C4]
L5204	IND_0402-LF	mlb_noldo[42C3]
L5205	IND_0402-LF	mlb_noldo[42A3]
L5400	FILTER_4P_SM	mlb_noldo[44B5]
L5410	IND_0402-LF	mlb_noldo[44C5]
L5411	IND_0402-LF	mlb_noldo[44B5]
L5910	IND_0603	mlb_noldo[46A7]
L6800	IND_0402	mlb_noldo[54A5]
L6801	IND_0402	mlb_noldo[54D6]
L7200	IND_0402	mlb_noldo[55C7]
L7210	IND_0402	mlb_noldo[55C7]
L7211	IND_0402	mlb_noldo[55A7]
L7220	IND_0402	mlb_noldo[55B7]
L7230	IND_0402	mlb_noldo[55A7]
L7300	IND_0402-LF	mlb_noldo[56D6]
L7301	IND_0402-LF	mlb_noldo[56D4]
L7302	IND_0402	mlb_noldo[56D6]
L7303	IND_0402	mlb_noldo[56C6]
L7304	IND_0402	mlb_noldo[56C4]
L7305	IND_0402	mlb_noldo[56C5]
L7306	IND_0402	mlb_noldo[56C4]
L7307	IND_0402	mlb_noldo[56C6]
L7350	IND_0402	mlb_noldo[56B6]
L7351	IND_0402	mlb_noldo[56B4]
L7352	IND_0402	mlb_noldo[56B6]
L7353	IND_0402	mlb_noldo[56B6]
L7354	IND_0402	mlb_noldo[56B4]
L7355	IND_0402	mlb_noldo[56B6]
L7356	IND_0402	mlb_noldo[56B4]
L7357	IND_0402	mlb_noldo[56A6]
L7370	IND_0402	mlb_noldo[56B2]
L7371	IND_0402	mlb_noldo[56B1]
L7372	IND_0402	mlb_noldo[56B2]
L7373	IND_0402	mlb_noldo[56B1]
L7374	IND_0402	mlb_noldo[56B2]
L7375	IND_0402	mlb_noldo[56B1]
L7390	IND_0402	mlb_noldo[56D8]
L7400	IND_0402	mlb_noldo[57B4]
L7500	IND_SM	mlb_noldo[58D2]
L7501	IND_SM	mlb_noldo[58B2]
L7620	IND_L812HW	mlb_noldo[59B7]
L7680	IND_SM	mlb_noldo[59B2]
L7820	IND_3P_SM	mlb_noldo[61B3]
L7920	IND_SM	mlb_noldo[62B7]
L7960	IND_3P_SM	mlb_noldo[62B2]
L8090	IND_CDPH4D19F-SM	mlb_noldo[63D1]
L8201	IND_SM-LF	mlb_noldo[65A3]
L8202	IND_0402-LF	mlb_noldo[65A3]
L8203	IND_0402-LF	mlb_noldo[65A3]
L8204	IND_0402-LF	mlb_noldo[65A3]
L8205	IND_SM-LF	mlb_noldo[65A3]
L8207	IND_0402	mlb_noldo[65A7]
L8208	IND_0402	mlb_noldo[65A7]
L8209	IND_0402	mlb_noldo[65A7]
L8300	IND_3P_SM	mlb_noldo[66C4]
L9400	IND_0402-LF	mlb_noldo[67D4]
L9401	IND_0402-LF	mlb_noldo[67C4]
L9402	IND_0402-LF	mlb_noldo[67D4]
L9403	IND_0402-LF	mlb_noldo[67D4]
L9404	IND_0402-LF	mlb_noldo[67B4]
L9405	IND_0402-LF	mlb_noldo[67A4]
L9407	FILTER_4P_SM	mlb_noldo[67A4]
L9408	IND_0402-LF	mlb_noldo[67B4]
L9500	IND_0402-LF	mlb_noldo[68D5]
L9501	IND_0402-LF	mlb_noldo[68D5]
L9503	IND_0402-LF	mlb_noldo[68D8]
L9504	IND_0402-LF	mlb_noldo[68C8]
L9505	IND_0402-LF	mlb_noldo[68C8]
L9506	IND_0402-LF	mlb_noldo[68D8]
L9804	FILTER_4P_SM1	mlb_noldo[69A2]
L9805	FILTER_4P_2012H	mlb_noldo[69B2]
L9806	FILTER_4P_2012H	mlb_noldo[69B2]
L9807	FILTER_4P_2012H	mlb_noldo[69B2]
L9844	IND_SM-1	mlb_noldo[69C4]
Q2680	TRA_SINGLE_MOSFET_NCHN_SOT23	mlb_noldo[26A3]
Q3810	TRA_FDC638P_SM-LF	mlb_noldo[34C5]
Q3875	TRA_2N7002DW_SOT-363	mlb_noldo[34C6 34C7]
Q4590	TRA_FDC638P_SM-LF	mlb_noldo[39D5]
Q4591	TRA_2N7002_SOT23-LF	mlb_noldo[39C5]
Q5901	TRA_2N7002DW_SOT-363	mlb_noldo[46B4 46B5]
Q5950	TRA_2N3906_SOT23-LF	mlb_noldo[46A3]
Q5952	TRA_2N7002_SOT23-LF	mlb_noldo[46A3]
Q6100	TRA_SI3446DV_TSOP-LF	mlb_noldo[48A5]
Q6101	TRA_2N7002DW_SOT-363	mlb_noldo[48A6 48A7]
Q6150	TRA_TP0610_S0T23-3	mlb_noldo[48C6]
Q6151	TRA_2N7002_SOT23-LF	mlb_noldo[48C7]
Q6152	TRA_TP0610_S0T23-3	mlb_noldo[48C7]
Q6153	TRA_TP0610_S0T23-3	mlb_noldo[48C8]
Q6200	TRA_BC846BM3T5G_NPN_SOT732-3	mlb_noldo[49B6]
Q6560	TRA_2N7002_SOT23-LF	mlb_noldo[51B3]
Q6650	TRA_2N7002_SOT23-LF	mlb_noldo[52B6]
Q6651	TRA_TP0610_S0T23-3	mlb_noldo[52B6]
Q7400	TRA_2N7002DW_SOT-363	mlb_noldo[57C7 57D7]
Q7401	TRA_2N7002DW_SOT-363	mlb_noldo[57D5 57D6]
Q7402	TRA_2N7002DW_SOT-363	mlb_noldo[57B7 57C5]
Q7500	TRA_HAT2168H_LFPAK	mlb_noldo[58D3]
Q7501	TRA_HAT2165H_LFPAK	mlb_noldo[58D4]
Q7502	TRA_HAT2168H_LFPAK	mlb_noldo[58C3]

Q7503	TRA_HAT2165H_LFPAK	mlb_noldo[58B4]
Q7504	TRA_HAT2165H_LFPAK	mlb_noldo[58D3]
Q7505	TRA_HAT2165H_LFPAK	mlb_noldo[58B3]
Q7620	TRA_STL8NH3LL_COMBO_	mlb_noldo[59C7]
	PWRFLT-3P3X3P3	
Q7621	TRA_STL8NH3LL_COMBO_	mlb_noldo[59B7]
	PWRFLT-3P3X3P3	
Q7660	TRA_STL8NH3LL_COMBO_	mlb_noldo[59C3]
	PWRFLT-3P3X3P3	
Q7661	TRA_STL8NH3LL_COMBO_	mlb_noldo[59B3]
	PWRFLT-3P3X3P3	
Q7750	TRA_2N7002DW_SOT-363	mlb_noldo[60C6 60C7]
Q7820	TRA_IRF7821_SO-8	mlb_noldo[61C4]
Q7821	TRA_IRF7832_SO-8	mlb_noldo[61B4]
Q7920	TRA_IRF7821_SO-8	mlb_noldo[62C6]
Q7921	TRA_IRF7832_SO-8	mlb_noldo[62B6]
Q7960	TRA_IRF7821_SO-8	mlb_noldo[62C3]
Q7961	TRA_IRF7832_SO-8	mlb_noldo[62B3]
Q8000	TRA_FDC638P_SM-LF	mlb_noldo[63D4]
Q8005	TRA_STL8NH3LL_COMBO_	mlb_noldo[63C4]
	PWRFLT-3P3X3P3	
Q8010	TRA_FDC638P_SM-LF	mlb_noldo[63D4]
Q8015	TRA_STL8NH3LL_COMBO_	mlb_noldo[63C4]
	PWRFLT-3P3X3P3	
Q8025	TRA_SI3447BDV_SOT-6	mlb_noldo[63A4]
Q8030	TRA_2N7002DW_SOT-363	mlb_noldo[63A6 63B6]
Q8031	TRA_2N7002DW_SOT-363	mlb_noldo[63D6 63A6]
Q8059	TRA_2N7002DW_SOT-363	mlb_noldo[63C7 63C7]
Q8060	TRA_2N7002_SOT23-LF	mlb_noldo[63C8]
Q8061	TRA_2N7002DW_SOT-363	mlb_noldo[63B7 63B7]
Q8062	TRA_2N7002_SOT23-LF	mlb_noldo[63B8]
Q8063	TRA_2N7002_SOT23-LF	mlb_noldo[63B4]
Q8210	TRA_2N7002DW_SOT-363	mlb_noldo[65C6 65C3]
Q8220	TRA_2N7002DW_SOT-363	mlb_noldo[65C7 65C6]
Q8240	TRA_TP0610_S0T23-3	mlb_noldo[65C5]
Q8250	TRA_SI4405DY_SO-8	mlb_noldo[65D2]
Q8298	TRA_TP0610_S0T23-3	mlb_noldo[65C7]
Q8299	TRA_2N7002_SOT23-LF	mlb_noldo[65C7]
Q8300	TRA_SI4405DY_SO-8	mlb_noldo[66D5]
Q8301	TRA_HAT2168H_LFPAK	mlb_noldo[66C4]
Q8302	TRA_HAT2165H_LFPAK	mlb_noldo[66B4]
Q8320	TRA_SI4405DY_SO-8	mlb_noldo[66B3]
Q8321	TRA_SI4405DY_SO-8	mlb_noldo[66B3]
Q8322	TRA_2N7002DW_SOT-363	mlb_noldo[66A4 66A4]
Q8324	TRA_2N7002DW_SOT-363	mlb_noldo[66A3 66A4]
Q8340	TRA_IRLML5203_SM	mlb_noldo[66C8]
Q8350	TRA_2N7002_SOT23-LF	mlb_noldo[66A6]
Q9403	TRA_FDC638P_SM-LF	mlb_noldo[67B6]
Q9404	TRA_2N7002_SOT23-LF	mlb_noldo[67B7]
Q9405	TRA_TP0610_S0T23-3	mlb_noldo[67D5]
Q9406	TRA_2N7002_SOT23-LF	mlb_noldo[67D6]
Q9801	TRA_2N7002DW_SOT-363	mlb_noldo[69D6 69D6]
R0610	RES_402	mlb_noldo[6A7]
R0611	RES_402	mlb_noldo[6A8]
R0612	RES_402	mlb_noldo[6A8]
R0621	RES_402	mlb_noldo[6A7]
R0702	RES_402	mlb_noldo[7D5]
R0703	RES_402	mlb_noldo[7C5]
R0704	RES_402	mlb_noldo[7C5]
R0705	RES_402	mlb_noldo[7B4]
R0706	RES_402	mlb_noldo[7B4]
R0707	RES_402	mlb_noldo[7A4]
R0712	RES_402	mlb_noldo[7A4]
R0716	RES_402	mlb_noldo[7B2]
R0717	RES_402	mlb_noldo[7B2]
R0718	RES_402	mlb_noldo[7B2]
R0719	RES_402	mlb_noldo[7B2]
R0720	RES_402	mlb_noldo[7B7]
R0721	RES_402	mlb_noldo[7B7]
R0722	RES_402	mlb_noldo[7A7]
R0730	RES_402	mlb_noldo[7A4]
R0802	RES_402	mlb_noldo[8B6]
R0803	RES_402	mlb_noldo[8A7]
R0921	RES_402	mlb_noldo[9D2]
R0922	RES_402	mlb_noldo[9D2]
R0923	RES_402	mlb_noldo[9C2]
R0924	RES_402	mlb_noldo[9C2]
R0925	RES_402	mlb_noldo[9C2]
R0926	RES_402	mlb_noldo[9C2]
R0927	RES_402	mlb_noldo[9C2]
R1001	RES_402	mlb_noldo[10B6]
R1002	RES_402	mlb_noldo[10B6]
R1005	RES_402	mlb_noldo[10C4]
R1006	RES_402	mlb_noldo[10C3]
R1100	RES_402	mlb_noldo[11B5]
R1101	RES_402	mlb_noldo[11C5]
R1102	RES_402	mlb_noldo[11B4]
R1103	RES_402	mlb_noldo[11C5]
R1104	RES_402	mlb_noldo[11B5]
R1106	RES_402	mlb_noldo[11A3]
R1210	RES_402	mlb_noldo[12C3]
R1211	RES_402	mlb_noldo[12C3]
R1220	RES_402	mlb_noldo[12B7]
R1221	RES_402	mlb_noldo[12B7]
R1225	RES_402	mlb_noldo[12B7]
R1226	RES_402	mlb_noldo[12B7]
R1230	RES_402	mlb_noldo[12A7]
R1231	RES_402	mlb_noldo[12A7]
R1235	RES_402	mlb_noldo[12A7]
R1236	RES_402	mlb_noldo[12A7]
R1310	RES_402	mlb_noldo[13D3]
R1410	RES_402	mlb_noldo[14C2]
R1411	RES_402	mlb_noldo[14C2]
R1420	RES_402	mlb_noldo[14C6]
R1421	RES_402	mlb_noldo[14C6]
R1422	RES_402	mlb_noldo[14B6]
R1430	RES_402	mlb_noldo[14B6]
R1440	RES_402	mlb_noldo[14D6]
R1441	RES_402	mlb_noldo[14D6]
R1950	RES_402	mlb_noldo[19D5]
R1951	RES_402	mlb_noldo[19D5]
R1975	RES_402	mlb_noldo[19A4]
R1985	RES_402	mlb_noldo[19D3]
R1986	RES_402	mlb_noldo[19C6]
R1987	RES_402	mlb_noldo[19C6]
R1988	RES_402	mlb_noldo[19C7]
R1989	RES_402	mlb_noldo[19C7]
R1990	RES_402	mlb_noldo[19C3]
R2058	RES_402	mlb_noldo[20B4]
R2059	RES_402	mlb_noldo[20B4]
R2060	RES_402	mlb_noldo[20A4]
R2075	RES_402	mlb_noldo[20C7]
R2077	RES_402	mlb_noldo[20B7]
R2079	RES_402	mlb_noldo[20B7]

R2085	RES_402	mlb_noldo[20C4]
R2100	RES_402	mlb_noldo[21C3]
R2101	RES_402	mlb_noldo[21C4]
R2105	RES_402	mlb_noldo[21D6]
R2107	RES_402	mlb_noldo[21C2]
R2108	RES_402	mlb_noldo[21C2]
R2110	RES_402	mlb_noldo[21C2]
R2194	RES_402	mlb_noldo[21D4]
R2195	RES_402	mlb_noldo[21C6]
R2196	RES_402	mlb_noldo[21C6]
R2197	RES_402	mlb_noldo[21C6]
R2198	RES_402	mlb_noldo[21C6]
R2199	RES_402	mlb_noldo[21C3]
R2200	RES_402	mlb_noldo[22D7]
R2203	RES_402	mlb_noldo[22C2]
R2204	RES_402	mlb_noldo[22C2]
R2205	RES_402	mlb_noldo[22C6]
R2206	RES_402	mlb_noldo[22C5]
R2207	RES_402	mlb_noldo[22C5]
R2208	RES_402	mlb_noldo[22D5]
R2211	RES_402	mlb_noldo[22B3]
R2223	RES_402	mlb_noldo[22D6]
R2225	RES_402	mlb_noldo[22D7]
R2226	RES_402	mlb_noldo[22D5]
R2250	RES_402	mlb_noldo[22D7]
R2251	RES_402	mlb_noldo[22D6]
R2255	RES_402	mlb_noldo[22D7]
R2299	RES_402	mlb_noldo[22B5]
R2300	RES_402	mlb_noldo[23C7]
R2302	RES_402	mlb_noldo[23D3]
R2303	RES_402	mlb_noldo[23D3]
R2305	RES_402	mlb_noldo[23D3]
R2306	RES_402	mlb_noldo[23B7]
R2307	RES_402	mlb_noldo[23A7]
R2308	RES_402	mlb_noldo[23B7]
R2309	RES_402	mlb_noldo[23A7]
R2310	RES_402	mlb_noldo[23A7]
R2311	RES_402	mlb_noldo[23A7]
R2312	RES_402	mlb_noldo[23A3]
R2313	RES_402	mlb_noldo[23A7]
R2314	RES_402	mlb_noldo[23A7]
R2315	RES_402	mlb_noldo[23A3]
R2316	RES_402	mlb_noldo[23D7]
R2317	RES_402	mlb_noldo[23D7]
R2318	RES_402	mlb_noldo[23D7]
R2319	RES_402	mlb_noldo[23D2]
R2320	RES_402	mlb_noldo[23D7]
R2323	RES_402	mlb_noldo[23D5]
R2326	RES_402	mlb_noldo[23D6]
R2327	RES_402	mlb_noldo[23D6]
R2343	RES_402	mlb_noldo[23D1]
R2388	RES_402	mlb_noldo[23B2]
R2389	RES_402	mlb_noldo[23A4]
R2390	RES_402	mlb_noldo[23B3]
R2395	RES_402	mlb_noldo[23D7]
R2396	RES_402	mlb_noldo[23D6]
R2397	RES_402	mlb_noldo[23D6]
R2398	RES_402	mlb_noldo[23D8]
R2399	RES_402	mlb_noldo[23C1]
R2500	RES_603	mlb_noldo[25A8]
R2501	RES_402	mlb_noldo[25C8]
R2502	RES_402	mlb_noldo[25D8]
R2600	RES_402	mlb_noldo[26D4]
R2606	RES_402	mlb_noldo[26D5]
R2607	RES_402	mlb_noldo[26D5]
R2609	RES_402	mlb_noldo[26C7]
R2610	RES_402	mlb_noldo[26C7]
R2611	RES_402	mlb_noldo[26B5]
R2612	RES_402	mlb_noldo[26A5]
R2622	RES_402	mlb_noldo[26A5]
R2636	RES_402	mlb_noldo[26C2]
R2637	RES_402	mlb_noldo[26C2]
R2638	RES_402	mlb_noldo[26C2]
R2639	RES_402	mlb_noldo[26C2]
R2640	RES_402	mlb_noldo[26C2]
R2641	RES_402	mlb_noldo[26C2]
R2642	RES_402	mlb_noldo[26C2]
R2643	RES_402	mlb_noldo[26C2]
R2680	RES_402	mlb_noldo[26B3]
R2681	RES_402	mlb_noldo[26B2]
R2682	RES_402	mlb_noldo[26A2]
R2683	RES_402	mlb_noldo[26B2]
R2684	RES_402	mlb_noldo[26B2]
R2685	RES_402	mlb_noldo[26B2]
R2687	RES_402	mlb_noldo[26B2]
R2688	RES_402	mlb_noldo[26A3]
R2689	RES_402	mlb_noldo[26A2]
R2696	RES_402	mlb_noldo[26C6]
R2697	RES_402	mlb_noldo[26C5]
R2698	RES_402	mlb_noldo[26C5]
R2700	RES_402	mlb_noldo[27D7]
R2701	RES_402	mlb_noldo[27D7]
R2750	RES_402	mlb_noldo[27D4]
R2751	RES_402	mlb_noldo[27D4]
R2760	RES_402	mlb_noldo[27C4]
R2761	RES_402	mlb_noldo[27C4]
R2770	RES_402	mlb_noldo[27D2]
R2771	RES_402	mlb_noldo[27D2]
R2780	RES_402	mlb_noldo[27C2]
R2781	RES_402	mlb_noldo[27C2]
R2782	RES_402	mlb_noldo[27B2]
R2783	RES_402	mlb_noldo[27B2]
R2800	RES_402	mlb_noldo[28D2]
R2801	RES_402	mlb_noldo[28D2]
R2900	RES_402	mlb_noldo[29A4]
R2901	RES_402	mlb_noldo[29D2]
R2902	RES_402	mlb_noldo[29D2]
R3001	RES_402	mlb_noldo[30D4]
R3009	RES_402	mlb_noldo[30D4]
R3011	RES_402	mlb_noldo[30C4]
R3025	RES_402	mlb_noldo[30C4]
R3035	RES_402	mlb_noldo[30B4]
R3100	RES_402	mlb_noldo[31C5]
R3104	RES_402	mlb_noldo[31C5]
R3300	RES_402	mlb_noldo[32B6]
R3301	RES_402	mlb_noldo[32B7]
R3302	RES_402	mlb_noldo[32D4]
R3303	RES_402	mlb_noldo[32C4]
R3304	RES_402	mlb_noldo[32C7]
R3400	RES_402	mlb_noldo[33C1]
R3401	RES_402	mlb_noldo[33C7]
R3402	RES_402	mlb_noldo[33C1]
R3403	RES_402	mlb_noldo[33C1]
R3404	RES_402	mlb_noldo[33D1]

R3405	RES_402	mlb_noldo[33C1]
R3406	RES_402	mlb_noldo[33B1]
R3407	RES_402	mlb_noldo[33B1]
R3408	RES_402	mlb_noldo[33C1]
R3409	RES_402	mlb_noldo[33C1]
R3410	RES_402	mlb_noldo[33C1]
R3411	RES_402	mlb_noldo[33D4]
R3412	RES_402	mlb_noldo[33D4]
R3413	RES_402	mlb_noldo[33D4]
R3414	RES_402	mlb_noldo[33D4]
R3415	RES_402	mlb_noldo[33D4]
R3416	RES_402	mlb_noldo[33D4]
R3417	RES_402	mlb_noldo[33C7]
R3418	RES_402	mlb_noldo[33B4]
R3419	RES_402	mlb_noldo[33B4]
R3420	RES_402	mlb_noldo[33A4]
R3421	RES_402	mlb_noldo[33A4]
R3422	RES_402	mlb_noldo[33C4]
R3423	RES_402	mlb_noldo[33C4]
R3426	RES_402	mlb_noldo[33C4]
R3427	RES_402	mlb_noldo[33C4]
R3428	RES_402	mlb_noldo[33C4]
R3429	RES_402	mlb_noldo[33D8]
R3430	RES_402	mlb_noldo[33D7]
R3431	RES_402	mlb_noldo[33B1]
R3432	RES_402	mlb_noldo[33D7]
R3433	RES_402	mlb_noldo[33D8]
R3434	RES_402	mlb_noldo[33D4]
R3435	RES_402	mlb_noldo[33C4]
R3436	RES_402	mlb_noldo[33B1]
R3437	RES_402	mlb_noldo[33B1]
R3438	RES_402	mlb_noldo[33D1]
R3439	RES_402	mlb_noldo[33D1]
R3440	RES_402	mlb_noldo[33D1]
R3441	RES_402	mlb_noldo[33D1]
R3442	RES_402	mlb_noldo[33C1]
R3450	RES_402	mlb_noldo[33C7]
R3451	RES_402	mlb_noldo[33B7]
R3452	RES_402	mlb_noldo[33B7]
R3453	RES_402	mlb_noldo[33B7]
R3454	RES_402	mlb_noldo[33B7]
R3463	RES_402	mlb_noldo[33D7]
R3465	RES_402	mlb_noldo[33C4]
R3466	RES_402	mlb_noldo[33A7]
R3467	RES_402	mlb_noldo[33A7]
R3468	RES_402	mlb_noldo[33C7]
R3469	RES_402	mlb_noldo[33C7]
R3470	RES_402	mlb_noldo[33C7]
R3471	RES_402	mlb_noldo[33B7]
R3472	RES_402	mlb_noldo[33B7]
R3473	RES_402	mlb_noldo[33B7]
R3474	RES_402	mlb_noldo[33B8]
R3475	RES_402	mlb_noldo[33B7]
R3476	RES_402	mlb_noldo[33A7]
R3477	RES_402	mlb_noldo[33B4]
R3478	RES_402	mlb_noldo[33B4]
R3480	RES_402	mlb_noldo[33C7]
R3481	RES_402	mlb_noldo[33B1]
R3482	RES_402	mlb_noldo[33B1]
R3490	RES_402	mlb_noldo[33A4]
R3824	RES_402	mlb_noldo[34C4]
R3825	RES_402	mlb_noldo[34C5]
R3851	RES_402	mlb_noldo[34C4]
R3853	RES_402	mlb_noldo[34C3]
R3858	RES_402	mlb_noldo[34B5]
R3859	RES_402	mlb_noldo[34B4]
R3865	RES_402	mlb_noldo[34C6]
R3876	RES_402	mlb_noldo[34C7]
R3877	RES_402	mlb_noldo[34C6]
R3900	RES_402	mlb_noldo[35D3]
R3901	RES_402	mlb_noldo[35C3]
R3950	RES_402	mlb_noldo[35B7]
R4101	RES_402	mlb_noldo[36D8]
R4102	RES_402	mlb_noldo[36C8]
R4103	RES_402	mlb_noldo[36B4]
R4104	RES_402	mlb_noldo[36B4]
R4105	RES_402	mlb_noldo[36B4]
R4106	RES_402	mlb_noldo[36B5]
R4107	RES_402	mlb_noldo[36D8]
R4117	RES_402	mlb_noldo[36B3]
R4118	RES_402	mlb_noldo[36B3]
R4119	RES_402	mlb_noldo[36B3]
R4120	RES_402	mlb_noldo[36B4]
R4122	RES_402	mlb_noldo[36A3]
R4123	RES_402	mlb_noldo[36A2]
R4124	RES_402	mlb_noldo[36A2]
R4130	RES_402	mlb_noldo[36B6]
R4131	RES_402	mlb_noldo[36B6]
R4200	RES_402	mlb_noldo[37A6]
R4201	RES_402	mlb_noldo[37A5]
R4202	RES_402	mlb_noldo[37A5]
R4203	RES_402	mlb_noldo[37A5]
R4400	RES_402	mlb_noldo[38C3]
R4420	RES_402	mlb_noldo[38C2]
R4431	RES_402	mlb_noldo[38A6]
R4432	RES_402	mlb_noldo[38A6]
R4452	RES_402	mlb_noldo[38C3]
R4500	RES_402	mlb_noldo[39B6]
R4501	RES_402	mlb_noldo[39B6]
R4502	RES_402	mlb_noldo[39B5]
R4503	RES_402	mlb_noldo[39B5]
R4504	RES_402	mlb_noldo[39A5]
R4550	RES_402	mlb_noldo[39A7]
R4590	RES_402	mlb_noldo[39C5]
R4591	RES_402	mlb_noldo[39C5]
R4593	RES_402	mlb_noldo[39C6]
R4594	RES_402	mlb_noldo[39C6]
R4595	RES_402	mlb_noldo[39C5]
R4910	RES_402	mlb_noldo[40C6]
R5100	RES_402	mlb_noldo[41C6]
R5250	RES_402	mlb_noldo[42C8]
R5251	RES_402	mlb_noldo[42C8]
R5301	RES_402	mlb_noldo[43B4]
R5302	RES_402	mlb_noldo[43B4]
R5303	RES_402	mlb_noldo[43C4]
R5801	RES_402	mlb_noldo[45D1]
R5802	RES_402	mlb_noldo[45C1]
R5803	RES_402	mlb_noldo[45C1]
R5809	RES_402	mlb_noldo[45D2]
R5898	RES_402	mlb_noldo[45C2]
R5899	RES_402	mlb_noldo[45D3]
R5900	RES_402	mlb_noldo[46D7]
R5901	RES_603	mlb_noldo[46D8]
R5905	RES_402	mlb_noldo[46D4]

R5906	RES_402	mlb_noldo[46D4]
R5910	RES_603	mlb_noldo[46C8]
R5911	RES_402	mlb_noldo[46A6]
R5918	RES_402	mlb_noldo[46C5]
R5919	RES_402	mlb_noldo[46C5]
R5920	RES_402	mlb_noldo[46C5]
R5922	RES_402	mlb_noldo[46C5]
R5923	RES_402	mlb_noldo[46C5]
R5924	RES_402	mlb_noldo[46C4]
R5925	RES_402	mlb_noldo[46C5]
R5926	RES_402	mlb_noldo[46C4]
R5927	RES_402	mlb_noldo[46C5]
R5928	RES_402	mlb_noldo[46D4]
R5929	RES_402	mlb_noldo[46C5]
R5930	RES_402	mlb_noldo[46C5]
R5931	RES_402	mlb_noldo[46C4]
R5932	RES_402	mlb_noldo[46C4]
R5933	RES_402	mlb_noldo[46C4]
R5934	RES_402	mlb_noldo[46C5]
R5935	RES_402	mlb_noldo[46C4]
R5936	RES_402	mlb_noldo[46C5]
R5937	RES_402	mlb_noldo[46C4]
R5938	RES_402	mlb_noldo[46C5]
R5939	RES_402	mlb_noldo[46C4]
R5940	RES_402	mlb_noldo[46C5]
R5941	RES_402	mlb_noldo[46C4]
R5942	RES_402	mlb_noldo[46C5]
R5943	RES_402	mlb_noldo[46B4]
R5944	RES_402	mlb_noldo[46B4]
R5945	RES_402	mlb_noldo[46C4]
R5946	RES_402	mlb_noldo[46C4]
R5947	RES_402	mlb_noldo[46B4]
R5948	RES_402	mlb_noldo[46C5]
R5949	RES_402	mlb_noldo[46C4]
R5950	RES_402	mlb_noldo[46A3]
R5951	RES_402	mlb_noldo[46A3]
R5952	RES_402	mlb_noldo[46A3]
R5953	RES_402	mlb_noldo[46D5]
R5954	RES_402	mlb_noldo[46B5]
R5955	RES_402	mlb_noldo[46B5]
R5970	RES_402	mlb_noldo[46D3]
R5971	RES_402	mlb_noldo[46D3]
R5972	RES_402	mlb_noldo[46C7]
R5973	RES_402	mlb_noldo[46C5]
R5976	RES_402	mlb_noldo[46D1]
R5977	RES_402	mlb_noldo[46C1]
R5980	RES_402	mlb_noldo[46D5]
R5981	RES_402	mlb_noldo[46D5]
R5982	RES_402	mlb_noldo[46D5]
R5983	RES_402	mlb_noldo[46C5]
R5984	RES_402	mlb_noldo[46C5]
R5985	RES_402	mlb_noldo[46C5]
R5986	RES_402	mlb_noldo[46C5]
R5987	RES_402	mlb_noldo[46C5]
R5988	RES_402	mlb_noldo[46B5]
R5989	RES_402	mlb_noldo[46D5]
R5990	RES_402	mlb_noldo[46B2]
R5991	RES_402	mlb_noldo[46B2]
R5992	RES_402	mlb_noldo[46B2]
R5993	RES_402	mlb_noldo[46B2]
R5994	RES_402	mlb_noldo[46D5]
R5995	RES_402	mlb_noldo[46D5]
R5996	RES_402	mlb_noldo[46B4]
R5997	RES_402	mlb_noldo[46B4]
R5998	RES_402	mlb_noldo[46C4]
R5999	RES_402	mlb_noldo[46C4]
R6100	RES_402	mlb_noldo[48D3]
R6102	RES_402	mlb_noldo[48C2]
R6103	RES_402	mlb_noldo[48C3]
R6105	RES_402	mlb_noldo[48D4]
R6106	RES_402	mlb_noldo[48C4]
R6107	RES_402	mlb_noldo[48D4]
R6108	RES_402	mlb_noldo[48C4]
R6112	RES_402	mlb_noldo[48B2]
R6140	RES_402	mlb_noldo[48A7]
R6141	RES_402	mlb_noldo[48A7]
R6142	RES_402	mlb_noldo[48A6]
R6143	RES_1206	mlb_noldo[48A4]
R6144	RES_402	mlb_noldo[48A6]
R6150	RES_402	mlb_noldo[48C6]
R6151	RES_402	mlb_noldo[48B6]
R6152	RES_402	mlb_noldo[48C7]
R6153	RES_402	mlb_noldo[48B7]
R6200	RES_402	mlb_noldo[49C5]
R6201	RES_402	mlb_noldo[49C5]
R6203	RES_402	mlb_noldo[49D3]
R6251	RES_402	mlb_noldo[49A5]
R6252	RES_402	mlb_noldo[49B3]
R6301	RES_402	mlb_noldo[50D4]
R6302	RES_402	mlb_noldo[50D4]
R6303	RES_402	mlb_noldo[50C3]
R6306	RES_402	mlb_noldo[50C2]
R6307	RES_402	mlb_noldo[50C5]
R6308	RES_402	mlb_noldo[50D3]
R6309	RES_402	mlb_noldo[50C5]
R6560	RES_402	mlb_noldo[51C3]
R6561	RES_402	mlb_noldo[51B4]
R6565	RES_402	mlb_noldo[51C3]
R6621	RES_402	mlb_noldo[52A5]
R6650	RES_402	mlb_noldo[52B6]
R6652	RES_402	mlb_noldo[52B7]
R6700	RES_402	mlb_noldo[53C7]
R6702	RES_402	mlb_noldo[53C4]
R6703	RES_402	mlb_noldo[53C4]
R6704	RES_805	mlb_noldo[53C2]
R6705	RES_805	mlb_noldo[53C3]
R6798	RES_402	mlb_noldo[53B6]
R6799	RES_402	mlb_noldo[53B6]
R6800	RES_402	mlb_noldo[54C6]
R6801	RES_402	mlb_noldo[54B5]
R6802	RES_402	mlb_noldo[54A5]
R6807	RES_402	mlb_noldo[54D7]
R6808	RES_402	mlb_noldo[54D3]
R6809	RES_402	mlb_noldo[54C3]
R6810	RES_402	mlb_noldo[54A4]
R6811	RES_402	mlb_noldo[54A4]
R6850	RES_402	mlb_noldo[54B7]
R6851	RES_402	mlb_noldo[54B7]
R6852	RES_402	mlb_noldo[54B7]
R6853	RES_402	mlb_noldo[54A7]
R6854	RES_402	mlb_noldo[54B4]
R7201	RES_402	mlb_noldo[55C4]
R7202	RES_402	mlb_noldo[55A4]
R7210	RES_402	mlb_noldo[55A7]

R7260	RES_402	mlb_noldo[55D2]
R7261	RES_402	mlb_noldo[55C2]
R7270	RES_402	mlb_noldo[55C2]
R7271	RES_402	mlb_noldo[55C2]
R7280	RES_402	mlb_noldo[55B2]
R7281	RES_402	mlb_noldo[55B2]
R7300	RES_402	mlb_noldo[56C4]
R7301	RES_402	mlb_noldo[56C4]
R7320	RES_402	mlb_noldo[56B5]
R7321	RES_402	mlb_noldo[56D7]
R7322	RES_402	mlb_noldo[56B7]
R7349	RES_402	mlb_noldo[56B7]
R7350	RES_402	mlb_noldo[56A4]
R7351	RES_402	mlb_noldo[56A4]
R7380	RES_402	mlb_noldo[56C2]
R7382	RES_402	mlb_noldo[56B2]
R7391	RES_402	mlb_noldo[56C7]
R7401	RES_402	mlb_noldo[57D8]
R7402	RES_402	mlb_noldo[57D7]
R7403	RES_402	mlb_noldo[57C7]
R7404	RES_402	mlb_noldo[57C4]
R7405	RES_402	mlb_noldo[57D5]
R7406	RES_402	mlb_noldo[57D6]
R7411	RES_402	mlb_noldo[57C8]
R7412	RES_402	mlb_noldo[57B7]
R7413	RES_402	mlb_noldo[57C6]
R7414	RES_402	mlb_noldo[57C4]
R7415	RES_402	mlb_noldo[57C5]
R7430	RES_603	mlb_noldo[57C3]
R7431	RES_603	mlb_noldo[57B3]
R7432	RES_402	mlb_noldo[57B3]
R7433	RES_402	mlb_noldo[57A3]
R7434	RES_402	mlb_noldo[57C2]
R7435	RES_402	mlb_noldo[57C2]
R7436	RES_402	mlb_noldo[57B2]
R7437	RES_402	mlb_noldo[57B2]
R7438	RES_402	mlb_noldo[57C2]
R7439	RES_402	mlb_noldo[57B2]
R7440	RES_402	mlb_noldo[57A5]
R7450	RES_402	mlb_noldo[57A7]
R7451	RES_402	mlb_noldo[57A7]
R7452	RES_402	mlb_noldo[57A7]
R7453	RES_402	mlb_noldo[57A7]
R7454	RES_402	mlb_noldo[57A7]
R7460	RES_402	mlb_noldo[57C6]
R7461	RES_402	mlb_noldo[57C7]
R7500	RES_402	mlb_noldo[58C2]
R7501	RES_402	mlb_noldo[58C2]
R7502	RES_805	mlb_noldo[58B3]
R7503	RES_805	mlb_noldo[58D3]
R7504	RES_402	mlb_noldo[58C1]
R7505	RES_402	mlb_noldo[58B2]
R7506	RES_402	mlb_noldo[58C7]
R7507	RES_402	mlb_noldo[58B1]
R7508	RES_402	mlb_noldo[58B8]
R7509	RES_402	mlb_noldo[58B8]
R7510	RES_402	mlb_noldo[58B6]
R7511	RES_402	mlb_noldo[58B8]
R7512	RES_402	mlb_noldo[58D7]
R7513	RES_402	mlb_noldo[58B7]
R7514	RES_402	mlb_noldo[58B8]
R7515	RES_402	mlb_noldo[58B5]
R7516	RES_402	mlb_noldo[58B4]
R7517	RES_402	mlb_noldo[58B5]
R7518	RES_402	mlb_noldo[58B5]
R7519	RES_402	mlb_noldo[58C7]
R7520	RES_402	mlb_noldo[58D7]
R7521	RES_402	mlb_noldo[58D8]
R7522	RES_402	mlb_noldo[58A5]
R7523	RES_402	mlb_noldo[58A6]
R7524	RES_402	mlb_noldo[58D5]
R7525	RES_402	mlb_noldo[58C5]
R7526	THERMISTER_402	mlb_noldo[58C7]
R7527	RES_402	mlb_noldo[58C8]
R7530	RES_402	mlb_noldo[58B4]
R7531	THERMISTER_0603-LF	mlb_noldo[58B4]
R7543	RES_402	mlb_noldo[58B2]
R7545	RES_402	mlb_noldo[58C7]
R7600	RES_402	mlb_noldo[59C5]
R7603	RES_402	mlb_noldo[59A3]
R7604	RES_402	mlb_noldo[59A3]
R7606	RES_402	mlb_noldo[59A3]
R7607	RES_402	mlb_noldo[59A3]
R7621	RES_402	mlb_noldo[59C7]
R7624	RES_402	mlb_noldo[59C6]
R7625	RES_402	mlb_noldo[59B6]
R7626	RES_402	mlb_noldo[59C7]
R7627	RES_402	mlb_noldo[59B7]
R7628	RES_402	mlb_noldo[59B7]
R7629	RES_402	mlb_noldo[59C7]
R7630	RES_402	mlb_noldo[59C5]
R7661	RES_402	mlb_noldo[59C2]
R7664	RES_402	mlb_noldo[59C3]
R7665	RES_402	mlb_noldo[59B4]
R7666	RES_402	mlb_noldo[59C2]
R7667	RES_402	mlb_noldo[59B2]
R7668	RES_402	mlb_noldo[59B2]
R7669	RES_402	mlb_noldo[59C2]
R7670	RES_402	mlb_noldo[59C4]
R7720	RES_402	mlb_noldo[60B3]
R7721	RES_402	mlb_noldo[60A3]
R7750	RES_402	mlb_noldo[60C6]
R7751	RES_402	mlb_noldo[60C7]
R7752	RES_402	mlb_noldo[60C7]
R7753	RES_402	mlb_noldo[60B7]
R7800	RES_402	mlb_noldo[61C4]
R7801	RES_402	mlb_noldo[61B2]
R7802	RES_1206	mlb_noldo[61C3]
R7803	RES_402	mlb_noldo[61C2]
R7804	RES_402	mlb_noldo[61C7]
R7805	RES_402	mlb_noldo[61B7]
R7806	RES_402	mlb_noldo[61B7]
R7807	RES_402	mlb_noldo[61C5]
R7808	RES_402	mlb_noldo[61B6]
R7810	RES_402	mlb_noldo[61B4]
R7821	RES_402	mlb_noldo[61B2]
R7822	RES_402	mlb_noldo[61B2]
R7860	RES_603	mlb_noldo[61C3]
R7861	RES_402	mlb_noldo[61C2]
R7863	RES_402	mlb_noldo[61C2]
R7900	RES_402	mlb_noldo[62C5]
R7901	RES_402	mlb_noldo[62B1]
R7902	RES_1206	mlb_noldo[62A7]
R7903	RES_402	mlb_noldo[62A3]

R7904	RES_402	mlb_noldo[62A3]
R7905	RES_402	mlb_noldo[62A6]
R7906	RES_402	mlb_noldo[62A3]
R7907	RES_402	mlb_noldo[62A3]
R7921	RES_402	mlb_noldo[62C7]
R7924	RES_402	mlb_noldo[62C6]
R7925	RES_402	mlb_noldo[62B6]
R7926	RES_402	mlb_noldo[62C7]
R7927	RES_402	mlb_noldo[62B8]
R7928	RES_402	mlb_noldo[62B8]
R7929	RES_402	mlb_noldo[62C7]
R7930	RES_402	mlb_noldo[62C5]
R7961	RES_402	mlb_noldo[62C2]
R7964	RES_402	mlb_noldo[62C3]
R7965	RES_402	mlb_noldo[62B3]
R7966	RES_402	mlb_noldo[62C2]
R7967	RES_402	mlb_noldo[62B2]
R7968	RES_402	mlb_noldo[62B2]
R7969	RES_402	mlb_noldo[62C2]
R7970	RES_402	mlb_noldo[62C4]
R7990	RES_402	mlb_noldo[62A6]
R7991	RES_402	mlb_noldo[62A6]
R7992	RES_603	mlb_noldo[62A7]
R8000	RES_402	mlb_noldo[63D5]
R8005	RES_402	mlb_noldo[63C5]
R8010	RES_402	mlb_noldo[63C5]
R8015	RES_402	mlb_noldo[63B5]
R8025	RES_402	mlb_noldo[63A5]
R8030	RES_402	mlb_noldo[63B6]
R8031	RES_402	mlb_noldo[63B6]
R8032	RES_402	mlb_noldo[63D6]
R8033	RES_402	mlb_noldo[63D6]
R8050	RES_402	mlb_noldo[63A6]
R8056	RES_402	mlb_noldo[63C8]
R8057	RES_402	mlb_noldo[63C8]
R8058	RES_402	mlb_noldo[63B8]
R8059	RES_402	mlb_noldo[63B8]
R8061	RES_402	mlb_noldo[63B1]
R8062	RES_402	mlb_noldo[63B1]
R8063	RES_402	mlb_noldo[63A1]
R8064	RES_402	mlb_noldo[63A1]
R8065	RES_402	mlb_noldo[63B2]
R8091	RES_402	mlb_noldo[63D1]
R8092	RES_402	mlb_noldo[63C1]
R8200	RES_402	mlb_noldo[65B7]
R8201	RES_402	mlb_noldo[65C5]
R8202	RES_402	mlb_noldo[65C5]
R8203	RES_402	mlb_noldo[65C6]
R8204	RES_402	mlb_noldo[65C6]
R8205	RES_805	mlb_noldo[65D4]
R8206	RES_402	mlb_noldo[65C4]
R8207	RES_402	mlb_noldo[65C4]
R8208	RES_402	mlb_noldo[65C4]
R8209	RES_402	mlb_noldo[65C4]
R8210	RES_402	mlb_noldo[65C4]
R8211	RES_402	mlb_noldo[65C6]
R8213	RES_402	mlb_noldo[65C2]
R8214	RES_402	mlb_noldo[65C2]
R8231	RES_402	mlb_noldo[65C5]
R8232	RES_402	mlb_noldo[65C6]
R8233	RES_402	mlb_noldo[65C5]
R8296	RES_402	mlb_noldo[65B7]
R8297	RES_402	mlb_noldo[65C3]
R8298	RES_402	mlb_noldo[65C8]
R8299	RES_402	mlb_noldo[65C7]
R8300	RES_402	mlb_noldo[66C6]
R8301	RES_402	mlb_noldo[66C7]
R8302	RES_402	mlb_noldo[66C5]
R8303	RES_402	mlb_noldo[66C5]
R8304	RES_805	mlb_noldo[66B2]
R8305	RES_402	mlb_noldo[66C5]
R8306	RES_402	mlb_noldo[66C7]
R8308	RES_0612	mlb_noldo[66C3]
R8309	RES_402	mlb_noldo[66B6]
R8310	RES_402	mlb_noldo[66C5]
R8311	RES_402	mlb_noldo[66B7]
R8312	RES_402	mlb_noldo[66C7]
R8320	RES_2525	mlb_noldo[66B3]
R8322	RES_402	mlb_noldo[66A3]
R8323	RES_402	mlb_noldo[66A3]
R8324	RES_402	mlb_noldo[66A4]
R8325	RES_402	mlb_noldo[66A5]
R8330	RES_402	mlb_noldo[66B4]
R8331	RES_402	mlb_noldo[66A4]
R8340	RES_402	mlb_noldo[66C8]
R8341	RES_402	mlb_noldo[66B8]
R8342	RES_402	mlb_noldo[66C8]
R8343	RES_402	mlb_noldo[66B8]
R8344	RES_402	mlb_noldo[66B8]
R8350	RES_402	mlb_noldo[66B5]
R8351	RES_402	mlb_noldo[66B6]
R8352	RES_402	mlb_noldo[66B5]
R8360	RES_402	mlb_noldo[66D7]
R8361	RES_402	mlb_noldo[66C7]
R8362	RES_402	mlb_noldo[66B7]
R8363	RES_402	mlb_noldo[66B6]
R8364	RES_402	mlb_noldo[66B6]
R8365	RES_402	mlb_noldo[66B6]
R8367	RES_402	mlb_noldo[66C6]
R8370	RES_402	mlb_noldo[66C2]
R8371	RES_402	mlb_noldo[66B2]
R8381	RES_603	mlb_noldo[66B4]
R8397	RES_0612	mlb_noldo[66C4]
R9400	RES_402	mlb_noldo[67D6]
R9401	RES_402	mlb_noldo[67D6]
R9402	RES_402	mlb_noldo[67C7]
R9408	RES_402	mlb_noldo[67B5]
R9409	RES_402	mlb_noldo[67B5]
R9413	RES_402	mlb_noldo[67A6]
R9414	RES_402	mlb_noldo[67B7]
R9415	RES_402	mlb_noldo[67B7]
R9416	RES_402	mlb_noldo[67B7]
R9423	RES_402	mlb_noldo[67B6]
R9428	RES_402	mlb_noldo[67C5]
R9500	RES_402	mlb_noldo[68A7]
R9501	RES_402	mlb_noldo[68B6]
R9502	RES_402	mlb_noldo[68B6]
R9503	RES_402	mlb_noldo[68A4]
R9504	RES_402	mlb_noldo[68B2]
R9505	RES_402	mlb_noldo[68B2]
R9506	RES_402	mlb_noldo[68B1]
R9507	RES_402	mlb_noldo[68D2]
R9508	RES_402	mlb_noldo[68D2]
R9509	RES_402	mlb_noldo[68C2]

R9510	RES_402	mlb_noldo[68C2]
R9537	RES_402	mlb_noldo[68D1]
R9538	RES_402	mlb_noldo[68D1]
R9539	RES_402	mlb_noldo[68C1]
R9540	RES_402	mlb_noldo[68C1]
R9821	RES_402	mlb_noldo[69D7]
R9822	RES_402	mlb_noldo[69D6]
R9850	RES_402	mlb_noldo[69B8]
R9851	RES_402	mlb_noldo[69B8]
R9852	RES_402	mlb_noldo[69A8]
R9853	RES_402	mlb_noldo[69A8]
R9854	RES_402	mlb_noldo[69A8]
R9855	RES_402	mlb_noldo[69A8]
R9856	RES_402	mlb_noldo[69B6]
R9859	RES_402	mlb_noldo[69A6]
R9860	RES_402	mlb_noldo[69C3]
R9861	RES_402	mlb_noldo[69C3]
R9862	RES_402	mlb_noldo[69C5]
R9863	RES_402	mlb_noldo[69C5]
R9864	RES_402	mlb_noldo[69A6]
R9868	RES_402	mlb_noldo[69C8]
R9869	RES_402	mlb_noldo[69C8]
R9870	RES_402	mlb_noldo[69C1]
R9871	RES_402	mlb_noldo[69C1]
RP2300	RPAK4P_SM-LF	mlb_noldo[23D5]
RP2600	RPAK4P_SM-LF	mlb_noldo[26D2]
RP2601	RPAK4P_SM-LF	mlb_noldo[26D2]
RP2602	RPAK4P_SM-LF	mlb_noldo[26C2]
RP3000	RPAK4P_SM-LF	mlb_noldo[30B4 30C4 30D4 30D4]
RP3001	RPAK4P_SM-LF	mlb_noldo[30C4 30A4 30A4 30D4]
RP3002	RPAK4P_SM-LF	mlb_noldo[30A4 30A4 30A4 30D4]
RP3003	RPAK4P_SM-LF	mlb_noldo[30C4 30C4 30C4 30D4]
RP3004	RPAK4P_SM-LF	mlb_noldo[30C4 30C4 30D4]
RP3005	RPAK4P_SM-LF	mlb_noldo[30B4 30A4 30A4 30D4]
RP3006	RPAK4P_SM-LF	mlb_noldo[30B4 30B4 30A4 30D4]
RP3007	RPAK4P_SM-LF	mlb_noldo[30C4 30C4 30C4 30C4]
RP3008	RPAK4P_SM-LF	mlb_noldo[30C4 30C4 30C4 30C4]
RP3009	RPAK4P_SM-LF	mlb_noldo[30B4 30B4 30C4 30C4]
RP3010	RPAK4P_SM-LF	mlb_noldo[30B4 30B4 30B4 30B4]
RP3011	RPAK4P_SM-LF	mlb_noldo[30B4 30A4 30B4 30B4]
T4201	XFR_1000BT_82400275_XFR-SM	mlb_noldo[37C6]
T4202	XFR_1000BT_82400275_XFR-SM	mlb_noldo[37B6]
U0700	CPU_YONAH_BGA	mlb_noldo[7C3 7D7]
U0700	CPU_YONAH_BGA	mlb_noldo[8D8 8D4]
U1001	ADT7461_MSOP	mlb_noldo[10C5]
U1200	NB_945GM_BGA	mlb_noldo[12D5]
U1200	NB_945GM_BGA	mlb_noldo[13D4]
U1200	NB_945GM_BGA	mlb_noldo[14D5]
U1200	NB_945GM_BGA	mlb_noldo[15D3 15D7]
U1200	NB_945GM_BGA	mlb_noldo[16D2 16C8]
U1200	NB_945GM_BGA	mlb_noldo[17D5]
U1200	NB_945GM_BGA	mlb_noldo[18D4 18D7]
U1900	LREG_TPS73115_SOT23-5	mlb_noldo[19D6]
U1901	MM157_SOT23-5-LF	mlb_noldo[19C4]
U2100	SB_ICH7M_BGA	mlb_noldo[21D6]
U2100	SB_ICH7M_BGA	mlb_noldo[22B7 22D3]
U2100	SB_ICH7M_BGA	mlb_noldo[23D4]
U2100	SB_ICH7M_BGA	mlb_noldo[24D4 24D7]
U2601	MC74VHC1G08_SC70	mlb_noldo[26A5]
U2603	MC74VHC1G00_SC70-5	mlb_noldo[26A7]
U2680	MC74VHC1G08_SC70	mlb_noldo[26B3]
U3100	LREG_BD3533FVM_MSOP-8	mlb_noldo[31C4]
U3301	CLK_SYN_SLG8LP436_QFN	mlb_noldo[32C5]
U4101	88E8053_QFN	mlb_noldo[36D6]
U4102	EEPROM_M24C08_SO8	mlb_noldo[36A3]
U4400	FW32306_BGA_BGA	mlb_noldo[38C5]
U5100	CY8C24794_MLF	mlb_noldo[41C5]
U5200	SWI_TPS2042B_MSOP	mlb_noldo[42C7]
U5800	SMC_H8S2116_BGA	mlb_noldo[45A8 45C3 45C7 45D7]
U5900	VDET_RN5VD_SOT23-5	mlb_noldo[46D7]
U5910	OSC_12P_SG-3040LC-SM	mlb_noldo[46A7]
U5977	COMPARATOR_LMC7211_SM-LF	mlb_noldo[46C2]
U6100	OPAMP_LMV2011_SOT23-5	mlb_noldo[48C3]
U6200	MAX6695_UMAX1	mlb_noldo[49D4]
U6250	MAX6695_UMAX1	mlb_noldo[49B4]
U6301	FLASH_SST25VF016B_SOI_SOI	mlb_noldo[50D3]
U6620	KXM52_QFN	mlb_noldo[52C5]
U6650	LIS3L02AL_LGA	mlb_noldo[52B5]
U6700	TPM_TSSOP	mlb_noldo[53C5]
U6800	AUDIO_STAC92204XR_LQFP	mlb_noldo[54D5]
U7210	MAX9705_TDFN1	mlb_noldo[55C5]
U7220	MAX9705_TDFN1	mlb_noldo[55B5]
U7230	MAX9705_TDFN1	mlb_noldo[55A5]
U7400	MAX9890_UCSP1	mlb_noldo[57C2]
U7500	ISL6262_QFN	mlb_noldo[58C6]
U7600	LTC3728L_QFN	mlb_noldo[59C5]
U7700	MAX8887_SOT23-5	mlb_noldo[60D4]
U7701	MAX8887_SOT23-5	mlb_noldo[60C4]
U7720	LREG_MAX8516_SOP	mlb_noldo[60B3]
U7800	ISL6269_QFN	mlb_noldo[61C5]
U7801	AMP_INA326_MSOP	mlb_noldo[61C2]
U7900	LTC3728L_QFN	mlb_noldo[62C5]
U7901	AMP_INA326_MSOP	mlb_noldo[62A6]
U8070	LTC2908_LLP	mlb_noldo[63B2]
U8080	MC74VHC1G08_SC70	mlb_noldo[63B1]
U8090	LT3470_TSOT23-8	mlb_noldo[63D3]
U8200	COMPARATOR_LMC7211_SM-LF	mlb_noldo[65C4]
U8250	MC74VHC1G08_SC70	mlb_noldo[65C3]
U8290	COMPARATOR_LM397_SOT23-5	mlb_noldo[65C5]
U8300	ISL6255_QFN	mlb_noldo[66C6]
U8370	INA193_SOT23-5	mlb_noldo[66C3]
U8375	INA193_SOT23-5	mlb_noldo[66B2]
U9453	MC74VHC1G08_SC70	mlb_noldo[67C5]
U9500	SIL1362_LQFP	mlb_noldo[68B4]
U9801	VIDEO_TS3V330_SOP	mlb_noldo[69B7]
U9804	SN74LVC2G125_US	mlb_noldo[69C2 69C2]
VR5965	VREF_ISL6000233_SOT23-3	mlb_noldo[46C7]
VR6800	LREG_TPS79501_SOT223-6	mlb_noldo[54A5]
XW5800	SHORT_SM	mlb_noldo[45C3]
XW7200	SHORT_SM	mlb_noldo[55A5]
XW7300	SHORT_SM	mlb_noldo[56C4]

XW7301	SHORT_SM	mlb_noldo[56B4]
XW7302	SHORT_SM	mlb_noldo[56C2]
XW7303	SHORT_SM	mlb_noldo[56C2]
XW7304	SHORT_SM	mlb_noldo[56B2]
XW7305	SHORT_SM	mlb_noldo[56B7]
XW7400	SHORT_SM	mlb_noldo[57A7]
XW7500	SHORT_SM	mlb_noldo[58A6]
XW7600	SHORT_SM	mlb_noldo[59A5]
XW7620	JUMPER_OPEN-SAWTOOTH	mlb_noldo[59B8]
XW7660	JUMPER_OPEN-SAWTOOTH	mlb_noldo[59B1]
XW7800	SHORT_SM	mlb_noldo[61B5]
XW7900	SHORT_SM	mlb_noldo[62A5]
XW7920	JUMPER_OPEN-SAWTOOTH	mlb_noldo[62B8]
XW8101	SHORT_SM	mlb_noldo[64B2]
XW8102	SHORT_SM	mlb_noldo[64B2]
XW8300	SHORT_SM	mlb_noldo[66B4]
Y2600	CRYSTAL_4PIN_SM-LF	mlb_noldo[26C7]
Y3301	CRYSTAL_5X3.2-SM	mlb_noldo[32C7]
Y4101	CRYSTAL_4PIN_SM-3.2X2.5MM	mlb_noldo[36B6]
Y4403	CRYSTAL_4PIN_SM-3.2X2.5MM	mlb_noldo[38C2]
Y5920	CRYSTAL_5X3.2-SM	mlb_noldo[46C7]
Y6795	CRYSTAL_4PIN_SM-LF	mlb_noldo[53B6]
Z0601	MTGHOLE	mlb_noldo[6B8]
Z0602	MTGHOLE	mlb_noldo[6C6]
Z0603	PCB_STANDOFF	mlb_noldo[6A8]
Z0604	PCB_STANDOFF	mlb_noldo[6A6]
Z0605	PCB_STANDOFF	mlb_noldo[6A8]
Z0606	MTGHOLE	mlb_noldo[6D6]
Z0607	MTGHOLE	mlb_noldo[6C6]
Z0608	MTGHOLE	mlb_noldo[6C6]
Z0609	MTGHOLE	mlb_noldo[6B7]
Z0610	MTGHOLE	mlb_noldo[6B6]
Z0611	MTGHOLE	mlb_noldo[6B7]
Z0612	PCB_STANDOFF	mlb_noldo[6A6]
Z0613	PCB_STANDOFF	mlb_noldo[6A5]
Z0621	PCB_STANDOFF	mlb_noldo[6A6]
ZS0620	SPRING_CLIP_1P_EMI_CLIP-SM-M42	mlb_noldo[6D7]
ZS0621	CLIP_SM	mlb_noldo[6D6]