1. ALL RESISTANCE VALUES ARE IN OHMS, 0.1 WATT +/- 5%.
2. ALL CAPACITANCE VALUES ARE IN MICROFARADS.
3. ALL CRYSTALS & OSCILLATOR VALUES ARE IN HERTZ.

REV	ZONE	ECN	DESCRIPTION OF CHANGE	CK APPD / DATE	ENG APPD / DATE
02		421247	ENGINEERING RELEASED	01/19/06?	

SCHEM,SYMPHONY,M9
EVT
1/19/06

PDF PAGE	CSA PAGE	CONTENTS	SYNC MASTER	DATE
1	1	Table of Contents	N/A	N/A
2	2	Block Diagram	SIREN	01/06/2006
3	4	BOM CONFIGURATION	(MASTER)	(MASTER)
4	6	Aliases	SIREN	01/06/2006
5	51	Left USB Port	SIREN	01/06/2006
6	53	ExpressCard Connector	SIREN	01/06/2006
7	54	PCI-E MiniCard Connector	SIREN	01/06/2006
8	55	MLB I/O Board Connector	SIREN	01/06/2006
9	64	Left ALS	SIREN	01/06/2006
10	68	AUDIO: CODEC	AUDIO_M9_PRO_LIO	01/06/2006
11	70	AUDIO: LINE IN	AUDIO_M9_PRO_LIO	01/06/2006
12	71	AUDIO: HEADPHONE AMP	AUDIO_M9_PRO_LIO	01/06/2006
13	72	AUDIO: SPEAKER AMP	AUDIO_M9_PRO_LIO	01/06/2006
14	73	AUDIO: JACKS	AUDIO_M9_PRO_LIO	01/19/2006
15	74	AUDIO: JACK TRANSLATORS	AUDIO_M9_PRO_LIO	01/06/2006
16	78	3.3V Supply	SIREN	01/06/2006
17	82	DC-In & Battery Connectors	SIREN	01/06/2006
18	84	LEFT I/O POWER CONNECTOR	SIREN	01/06/2006
19	85	Cross Reference Page		
20	86	Cross Reference Page		
21	87	Cross Reference Page		

PART#	QTY	DESCRIPTION	REFERENCE DESIGNATOR(S)	BOM OPTION
051-7066	1	SCHEM,SYMPHONY,NEW,M9	SCH1	
820-1970	1	PCBF,SYMPHONY,M9	PCB1	

DIMENSIONS ARE IN MILLIMETERS
XX ±
X.XX ±
X.XXX ±
ANGLES ±
DO NOT SCALE DRAWING

THIRD ANGLE PROJECTION

METRIC

DRAFTER		DESIGN CK	
ENG APPD		MFG APPD	
QA APPD		DESIGNER	
RELEASE		SCALE NONE	

MATERIAL/FINISH NOTED AS APPLICABLE

SIZE D

Apple Computer Inc.

NOTICE OF PROPRIETARY PROPERTY

THE INFORMATION CONTAINED HEREIN IS THE PROPRIETARY PROPERTY OF APPLE COMPUTER, INC. THE POSSESSOR AGREES TO THE FOLLOWING

I TO MAINTAIN THE DOCUMENT IN CONFIDENCE
II NOT TO REPRODUCE OR COPY IT
III NOT TO REVEAL OR PUBLISH IN WHOLE OR PART

TITLE
SCHEM,SYMPHONY,NEW,M9

DRAWING NUMBER 051-7066 REV. 02

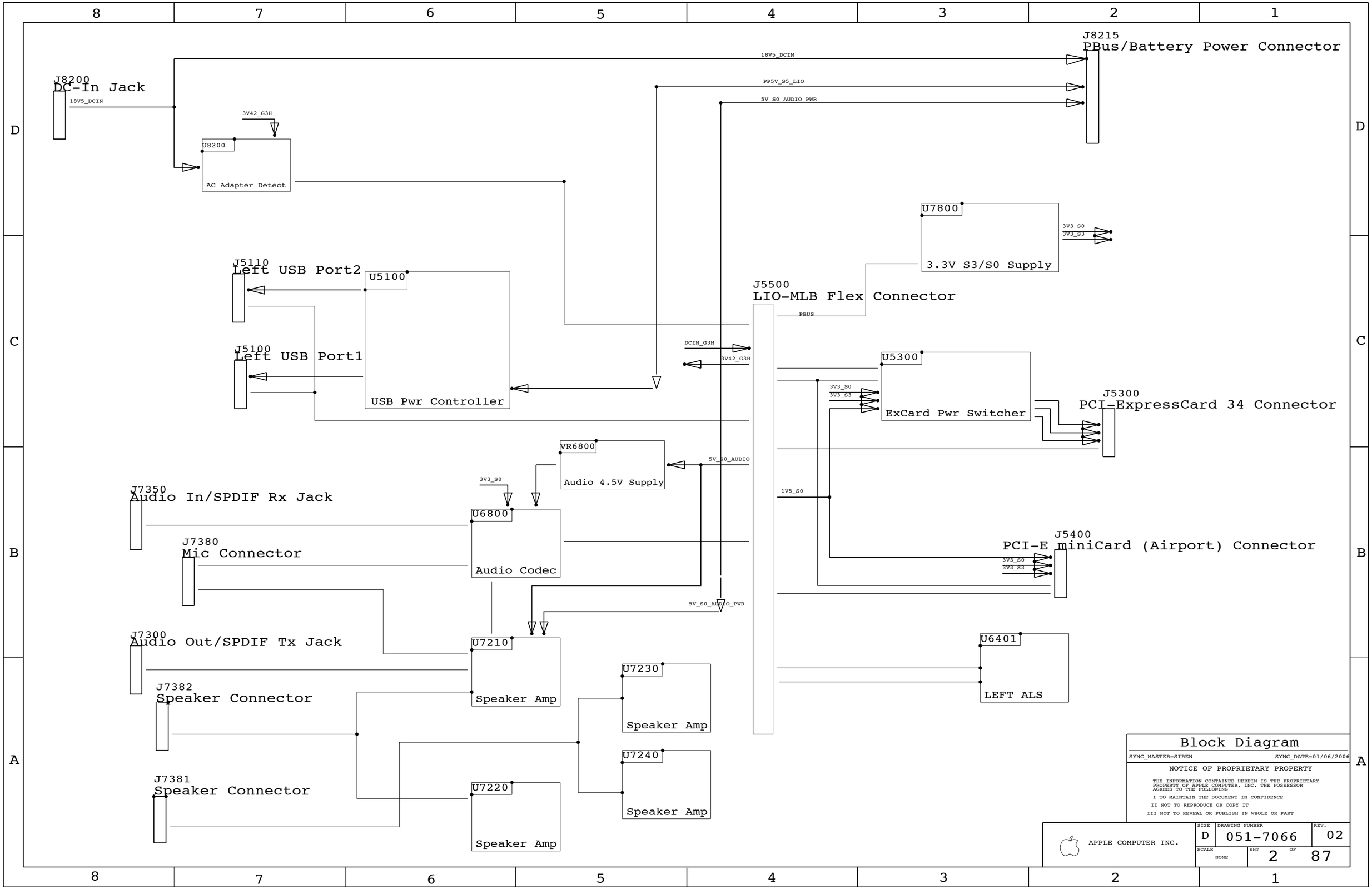
J8215
PBus/Battery Power Connector
18V5_DCIN
PP5V_S5_LIO
5V_S0_AUDIO_PWR
J8200
DC-In Jack
18V5_DCIN
3V42_G3H
U8200
AC Adapter Detect
U7800
3.3V S3/S0 Supply
3V3_S0
3V3_S3
J5110
Left USB Port2
U5100
J5500
LIO-MLB Flex Connector
PBUS
J5100
Left USB Port1
USB Pwr Controller
DCIN_G3H
3V42_G3H
U5300
ExCard Pwr Switcher
3V3_S0
3V3_S3
J5300
PCI-ExpressCard 34 Connector
VR6800
Audio 4.5V Supply
5V_S0_AUDIO
3V3_S0
J7350
Audio In/SPDIF Rx Jack
U6800
Audio Codec
1V5_S0
J7380
Mic Connector
J5400
PCI-E miniCard (Airport) Connector
3V3_S0
3V3_S3
5V_S0_AUDIO_PWR
J7300
Audio Out/SPDIF Tx Jack
U7210
Speaker Amp
U6401
LEFT ALS
U7230
Speaker Amp
J7382
Speaker Connector
U7240
Speaker Amp
J7381
Speaker Connector
U7220
Speaker Amp
Block Diagram
SYNC_MASTER=SIREN
SYNC_DATE=01/06/2006
NOTICE OF PROPRIETARY PROPERTY
THE INFORMATION CONTAINED HEREIN IS THE PROPRIETARY PROPERTY OF APPLE COMPUTER, INC. THE POSSESSOR AGREES TO THE FOLLOWING
I TO MAINTAIN THE DOCUMENT IN CONFIDENCE
II NOT TO REPRODUCE OR COPY IT
III NOT TO REVEAL OR PUBLISH IN WHOLE OR PART
APPLE COMPUTER INC.
SIZE
D
DRAWING NUMBER
051-7066
REV.
02
SCALE
NONE
SHT
2
OF
87

BOM NUMBER	BOM NAME	BOM OPTIONS
630-7510	PCBA,SYMPHONY,NEW,M9	075-0199,075-0200
075-0200	PROJ_PTS,SYMPHONY,NEW,M9	COMMON,EXCARD_3CNTL,ONEWIRE_DIV,ONEWIRE_PWRCTL
075-0199	LEMENU_PTS,SYMPHONY,NEW,M9	LEMENU

PHANTOM BOM #'S

PART NUMBER	QTY	DESCRIPTION	REFERENCE DES	CRITICAL	BOM OPTION
075-0200	1	PROJ PTS,SYMPHONY,M9	BOM1		075-0200
075-0199	1	LEMENU PTS,SYMPHONY,M9	BOM2		075-0199

BAR CODE LABEL / EEE#'S

PART NUMBER	QTY	DESCRIPTION	REFERENCE DES	CRITICAL	BOM OPTION
000-0041	1	PLACEHOLDER FOR EEE/CCC INFO	[EEE:V3P]	CRITICAL	

BOM CONFIGURATION

SYNC_MASTER=(MASTER) SYNC_DATE=(MASTER)

NOTICE OF PROPRIETARY PROPERTY

THE INFORMATION CONTAINED HEREIN IS THE PROPRIETARY PROPERTY OF APPLE COMPUTER, INC. THE POSSESSOR AGREES TO THE FOLLOWING

I TO MAINTAIN THE DOCUMENT IN CONFIDENCE

II NOT TO REPRODUCE OR COPY IT

III NOT TO REVEAL OR PUBLISH IN WHOLE OR PART

APPLE COMPUTER INC.

SIZE	DRAWING NUMBER	REV.
D	051-7066	02

SCALE NONE SHT 4 OF 87

POWER & GROUNDS

8 =PPBUS_G3H_LIO_CONN → PPBUS_G3H_LIO_CONN (MAKE_BASE=TRUE, VOLTAGE=18.5V, MIN_LINE_WIDTH=1mm, MIN_NECK_WIDTH=0.25mm) → =PPVIN_S3_3V3S3 16

8 =PP1V5_S0_LIO →
- PP1V5_S0_LIO (MAKE_BASE=TRUE, VOLTAGE=1.5V, MIN_LINE_WIDTH=0.5mm, MIN_NECK_WIDTH=0.20mm)
- =PP1V5_S0_MINI 7
- =PP1V5_S0_EXCARD 6

16 =PP3V3_S3_REG →
- PP3V3_S3_LIO (MAKE_BASE=TRUE, VOLTAGE=3.3V, MIN_LINE_WIDTH=0.50mm, MIN_NECK_WIDTH=0.20mm)
- =PP3V3_S3_MINI 7
- =PP3V3_S3_EXCARD 6
- =PP3V3_S3_LFTALS 9

16 =PP3V3_S0_FET →
- PP3V3_S0_LIO (MAKE_BASE=TRUE, VOLTAGE=3.3V, MIN_LINE_WIDTH=0.30MM, MIN_NECK_WIDTH=0.20MM)
- =PP3V3_S0_MINI 7
- =PP3V3_S0_AUDIO 10 14 15
- =PP3V3_S0_EXCARD 6

18 =PP5V_S5_LIO →
- PP5V_S5_LIO (MAKE_BASE=TRUE, VOLTAGE=5V, MIN_LINE_WIDTH=0.5mm, MIN_NECK_WIDTH=0.2mm)
- =PP5V_S5_LTUSB 5
- =PP5V_S5_3V3S3 16

13 12 10 8 =PP5V_S0_AUDIO → PP5V_S0_AUDIO_LIO (MAKE_BASE=TRUE, VOLTAGE=5V, MIN_LINE_WIDTH=0.30 MM, MIN_NECK_WIDTH=0.20 MM)

18 13 =PP5V_S0_AUDIO_PWR → PP5V_S0_AUDIO_PWR_LIO (MAKE_BASE=TRUE, VOLTAGE=5V, MIN_LINE_WIDTH=0.60 MM, MIN_NECK_WIDTH=0.20 MM)

18 14 13 =GND_AUDIO_PWR → GND_AUDIO_PWR (MAKE_BASE=TRUE, VOLTAGE=0V, MIN_LINE_WIDTH=0.50mm, MIN_NECK_WIDTH=0.20mm)

8 =GND_AUDIO →
- GND_AUDIO (MAKE_BASE=TRUE, VOLTAGE=0V, MIN_LINE_WIDTH=1MM, MIN_NECK_WIDTH=0.2MM)
- =GND_AUDIO_CODEC 10 11 12 13 14 15

CHASSIS_GND1 (MAKE_BASE=TRUE, VOLTAGE=0V, MIN_LINE_WIDTH=0.50mm, MIN_NECK_WIDTH=0.20mm)
- =GND_CHASSIS_LTUSB 5
- =GND_CHASSIS_DCIN_JACK 17

CHASSIS_GND2 (MAKE_BASE=TRUE, VOLTAGE=0V, MIN_LINE_WIDTH=0.50mm, MIN_NECK_WIDTH=0.20mm)
- =GND_CHASSIS_AUDIO_JACK 14
- =GND_CHASSIS_AUDIO_MIC 15

CHASSIS_GND3 (MAKE_BASE=TRUE, VOLTAGE=0V, MIN_LINE_WIDTH=0.50mm, MIN_NECK_WIDTH=0.20mm)
- =GND_CHASSIS_AUDIO_SPKRCONN 14

CHASSIS_GND4 (MAKE_BASE=TRUE, VOLTAGE=0V, MIN_LINE_WIDTH=0.50mm, MIN_NECK_WIDTH=0.20mm)
- =GND_CHASSIS_LIO_FLEX 8
- =GND_CHASSIS_PCIE_EXCARD 6

GND (VOLTAGE=0V, MIN_LINE_WIDTH=0.50mm, MIN_NECK_WIDTH=0.20mm)

PCI-E EXPRESS CARD 34

8 =USB2_EXCARD_P	USB2_EXCARD_P (MAKE_BASE=TRUE)	NET_SPACING_TYPE=USB	NET_PHYSICAL_TYPE=USB	6
8 =USB2_EXCARD_N	USB2_EXCARD_N (MAKE_BASE=TRUE)	NET_SPACING_TYPE=USB	NET_PHYSICAL_TYPE=USB	6
8 =PCIE_CLK100M_EXCARD_P	PCIE_CLK100M_EXCARD_P (MAKE_BASE=TRUE)	NET_SPACING_TYPE=PCIE	NET_PHYSICAL_TYPE=PCIE	6
8 =PCIE_CLK100M_EXCARD_N	PCIE_CLK100M_EXCARD_N (MAKE_BASE=TRUE)	NET_SPACING_TYPE=PCIE	NET_PHYSICAL_TYPE=PCIE	6
8 =PCIE_EXCARD_D2R_P	PCIE_EXCARD_D2R_P (MAKE_BASE=TRUE)	NET_SPACING_TYPE=PCIE	NET_PHYSICAL_TYPE=PCIE	6
8 =PCIE_EXCARD_D2R_N	PCIE_EXCARD_D2R_N (MAKE_BASE=TRUE)	NET_SPACING_TYPE=PCIE	NET_PHYSICAL_TYPE=PCIE	6
8 =PCIE_EXCARD_R2D_P	PCIE_EXCARD_R2D_P (MAKE_BASE=TRUE)	NET_SPACING_TYPE=PCIE	NET_PHYSICAL_TYPE=PCIE	6
8 =PCIE_EXCARD_R2D_N	PCIE_EXCARD_R2D_N (MAKE_BASE=TRUE)	NET_SPACING_TYPE=PCIE	NET_PHYSICAL_TYPE=PCIE	6
8 =EXCARD_CLKREQ_L	EXCARD_CLKREQ_L (MAKE_BASE=TRUE) 6			
8 =EXCARD_OC_L	EXCARD_OC_L (MAKE_BASE=TRUE) 6			

8 PCIE_WAKE_L (MAKE_BASE=TRUE)
- PCIE_WAKE_EXCARD_L 6
- PCIE_WAKE_MINI_L 7

7 6 PLT_RESET_L (MAKE_BASE=TRUE) → LIO_PLT_RESET_L 8

16 8 =LIO_P3V3S3_EN → LIO_P3V3S3_EN (MAKE_BASE=TRUE) → =USB_LEFT_PWRON 5

PCI-E MINICARD

8 =PCIE_MINI_R2D_P	PCIE_MINI_R2D_P (MAKE_BASE=TRUE)	NET_SPACING_TYPE=PCIE	NET_PHYSICAL_TYPE=PCIE	7
8 =PCIE_MINI_R2D_N	PCIE_MINI_R2D_N (MAKE_BASE=TRUE)	NET_SPACING_TYPE=PCIE	NET_PHYSICAL_TYPE=PCIE	7
8 =PCIE_MINI_D2R_P	PCIE_MINI_D2R_P (MAKE_BASE=TRUE)	NET_SPACING_TYPE=PCIE	NET_PHYSICAL_TYPE=PCIE	7
8 =PCIE_MINI_D2R_N	PCIE_MINI_D2R_N (MAKE_BASE=TRUE)	NET_SPACING_TYPE=PCIE	NET_PHYSICAL_TYPE=PCIE	7
8 =PCIE_CLK100M_MINI_P	PCIE_CLK100M_MINI_P (MAKE_BASE=TRUE)	NET_SPACING_TYPE=PCIE	NET_PHYSICAL_TYPE=PCIE	7
8 =PCIE_CLK100M_MINI_N	PCIE_CLK100M_MINI_N (MAKE_BASE=TRUE)	NET_SPACING_TYPE=PCIE	NET_PHYSICAL_TYPE=PCIE	7
7 USB2_MINI_P	TP_USB2_MINI_P (MAKE_BASE=TRUE)	NET_SPACING_TYPE=USB	NET_PHYSICAL_TYPE=USB	
7 USB2_MINI_N	TP_USB2_MINI_N (MAKE_BASE=TRUE)	NET_SPACING_TYPE=USB	NET_PHYSICAL_TYPE=USB	
8 =MINI_CLKREQ_L	MINI_CLKREQ_L (MAKE_BASE=TRUE) 7			

USB

5 USB_LEFT_P (MAKE_BASE=TRUE)	NET_SPACING_TYPE=USB	NET_PHYSICAL_TYPE=USB	=USB2_LT_P 8
5 USB_LEFT_N (MAKE_BASE=TRUE)	NET_SPACING_TYPE=USB	NET_PHYSICAL_TYPE=USB	=USB2_LT_N 8
5 USB_LEFT_OC_L (MAKE_BASE=TRUE)			=LTUSB_OC_L 8
5 USB_LEFT2_P (MAKE_BASE=TRUE)	NET_SPACING_TYPE=USB	NET_PHYSICAL_TYPE=USB	=USB2_LT2_P 8
5 USB_LEFT2_N (MAKE_BASE=TRUE)	NET_SPACING_TYPE=USB	NET_PHYSICAL_TYPE=USB	=USB2_LT2_N 8
5 USB_LEFT2_OC_L (MAKE_BASE=TRUE)			=LT2USB_OC_L 8

SMBUS

8 =SMBUS_SB_SDA
- SMBUS_SB_SDA (MAKE_BASE=TRUE)
- =SMBUS_EXCARD_SDA 6
- R0600 0 5% 1/16W MF-LF 402: 1 — 2 SMBUS_MINI_SDA (MAKE_BASE=TRUE) — =SMBUS_MINI_SDA 7

8 =SMBUS_SB_SCL
- SMBUS_SB_SCL (MAKE_BASE=TRUE)
- =SMBUS_EXCARD_SCL 6
- R0601 0 5% 1/16W MF-LF 402: 1 — 2 SMBUS_MINI_SCL (MAKE_BASE=TRUE) — =SMBUS_MINI_SCL 7

Aliases

SYNC_MASTER=SIREN SYNC_DATE=01/06/2006

NOTICE OF PROPRIETARY PROPERTY

THE INFORMATION CONTAINED HEREIN IS THE PROPRIETARY PROPERTY OF APPLE COMPUTER, INC. THE POSSESSOR AGREES TO THE FOLLOWING

I TO MAINTAIN THE DOCUMENT IN CONFIDENCE

II NOT TO REPRODUCE OR COPY IT

III NOT TO REVEAL OR PUBLISH IN WHOLE OR PART

APPLE COMPUTER INC.

SIZE	DRAWING NUMBER	REV.
D	051-7066	02

SCALE NONE SHT 6 OF 87

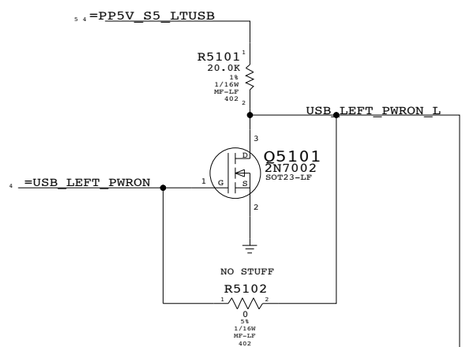

Stuff R5102 if TPS2052B so EN is high.

LEFT2 USB PORT

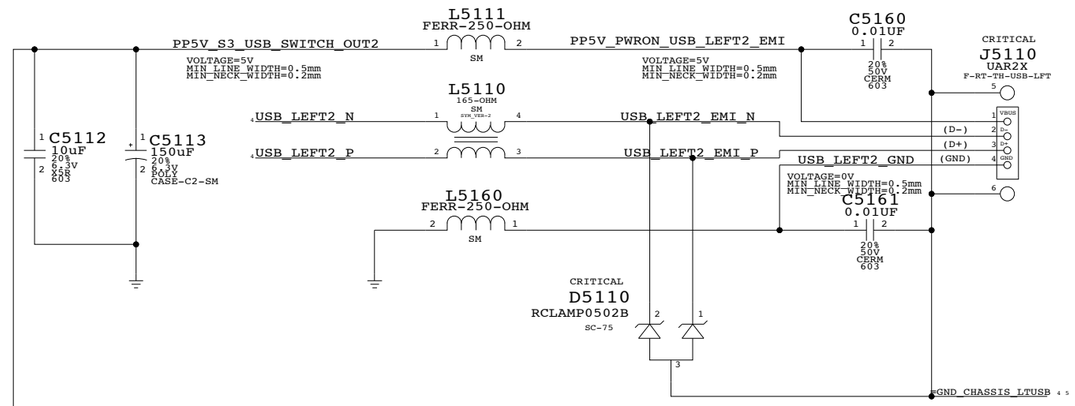

PUT L5110, L5111, AND L5160 ACROSS THE MOAT

LEFT USB PORT

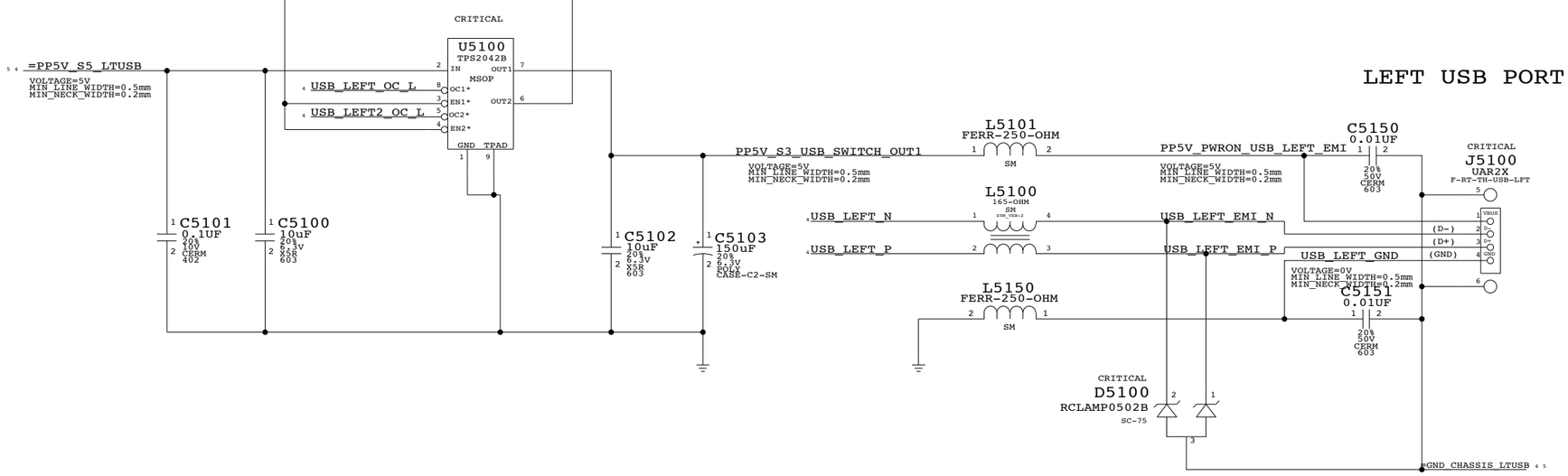

PUT L5100, L5101, AND L5150 ACROSS THE MOAT

Left USB Port

SYNC_MASTER=SIREN SYNC_DATE=01/06/2006

NOTICE OF PROPRIETARY PROPERTY

THE INFORMATION CONTAINED HEREIN IS THE PROPRIETARY PROPERTY OF APPLE COMPUTER, INC. THE POSSESSOR AGREES TO THE FOLLOWING

I TO MAINTAIN THE DOCUMENT IN CONFIDENCE

II NOT TO REPRODUCE OR COPY IT

III NOT TO REVEAL OR PUBLISH IN WHOLE OR PART

APPLE COMPUTER INC.

SIZE	DRAWING NUMBER	REV.
D	051-7066	02
SCALE NONE	SHT 51 OF 87	

PCI-EXPRESS CARD 34 TOP MOUNT CONNECTOR

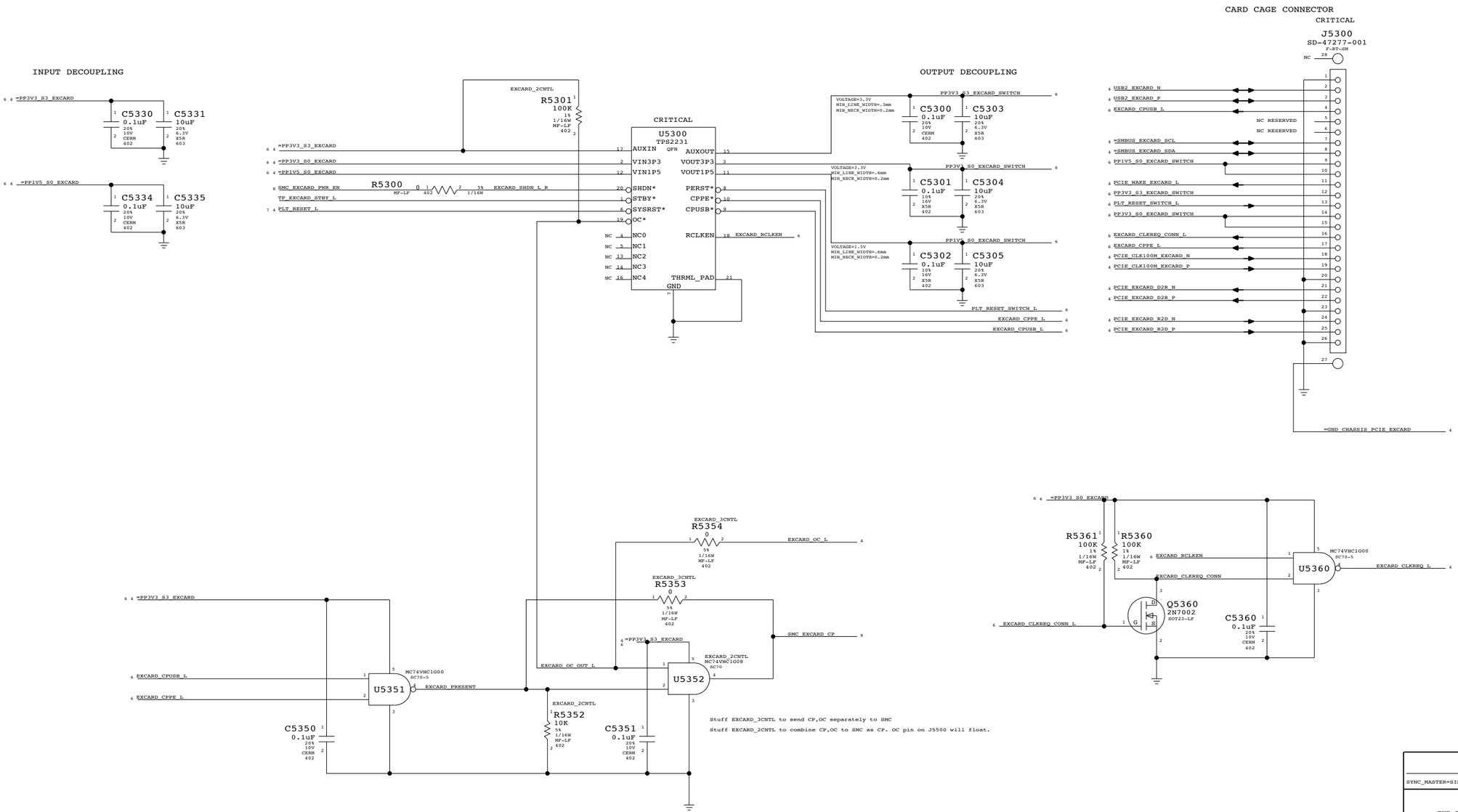

ExpressCard Connector

SYNC_MASTER=SIREN SYNC_DATE=01/06/2006

NOTICE OF PROPRIETARY PROPERTY

THE INFORMATION CONTAINED HEREIN IS THE PROPRIETARY PROPERTY OF APPLE COMPUTER, INC. THE POSSESSOR AGREES TO THE FOLLOWING

I TO MAINTAIN THE DOCUMENT IN CONFIDENCE

II NOT TO REPRODUCE OR COPY IT

III NOT TO REVEAL OR PUBLISH IN WHOLE OR PART

APPLE COMPUTER INC.

SIZE	DRAWING NUMBER	REV.
D	051-7066	02

SCALE NONE SHT 53 OF 87

PCI-EXPRESS MINI CARD CONNECTOR

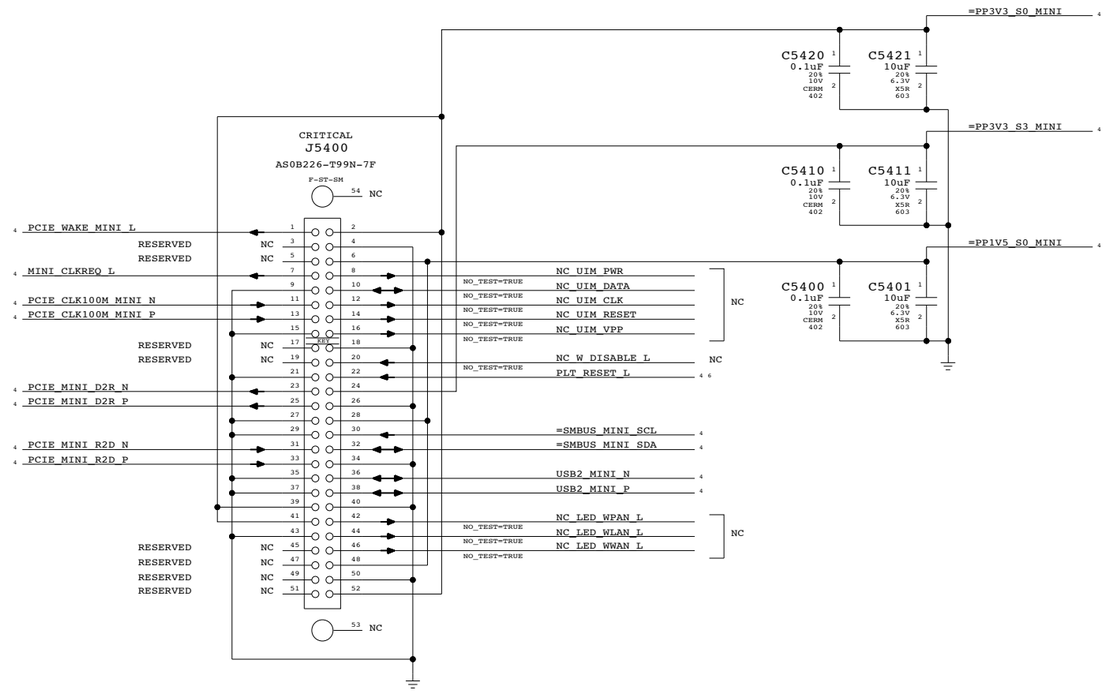

PCI-E MiniCard Connector

SYNC_MASTER=SIREN SYNC_DATE=01/06/2006

NOTICE OF PROPRIETARY PROPERTY

THE INFORMATION CONTAINED HEREIN IS THE PROPRIETARY PROPERTY OF APPLE COMPUTER, INC. THE POSSESSOR AGREES TO THE FOLLOWING

I TO MAINTAIN THE DOCUMENT IN CONFIDENCE

II NOT TO REPRODUCE OR COPY IT

III NOT TO REVEAL OR PUBLISH IN WHOLE OR PART

APPLE COMPUTER INC.

SIZE	DRAWING NUMBER	REV.
D	051-7066	02
SCALE NONE	SHT 54 OF 87	

Left I/O Board Connector

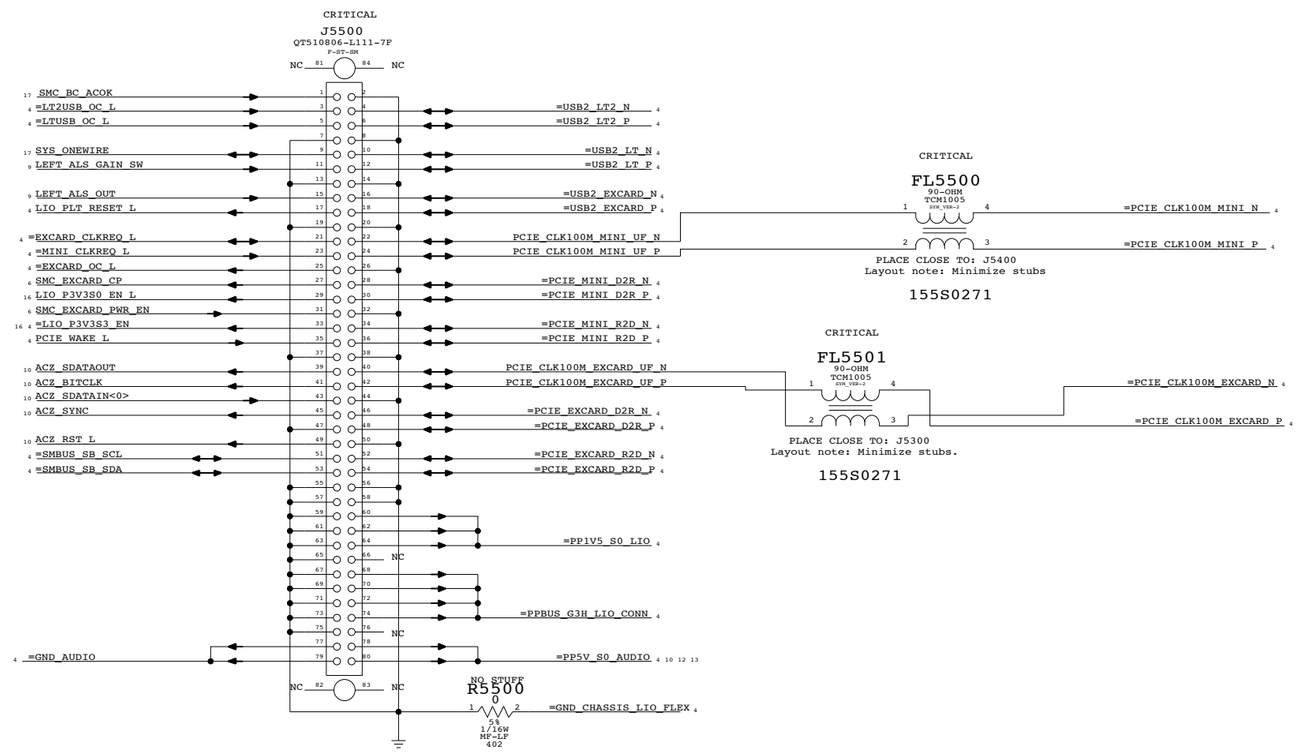

MLB I/O Board Connector

SYNC_MASTER=SIREN SYNC_DATE=01/06/2006

NOTICE OF PROPRIETARY PROPERTY

THE INFORMATION CONTAINED HEREIN IS THE PROPRIETARY PROPERTY OF APPLE COMPUTER, INC. THE POSSESSOR AGREES TO THE FOLLOWING

I TO MAINTAIN THE DOCUMENT IN CONFIDENCE

II NOT TO REPRODUCE OR COPY IT

III NOT TO REVEAL OR PUBLISH IN WHOLE OR PART

APPLE COMPUTER INC.

SIZE	DRAWING NUMBER	REV.
D	051-7066	02
SCALE NONE	SHT 55 OF 87	

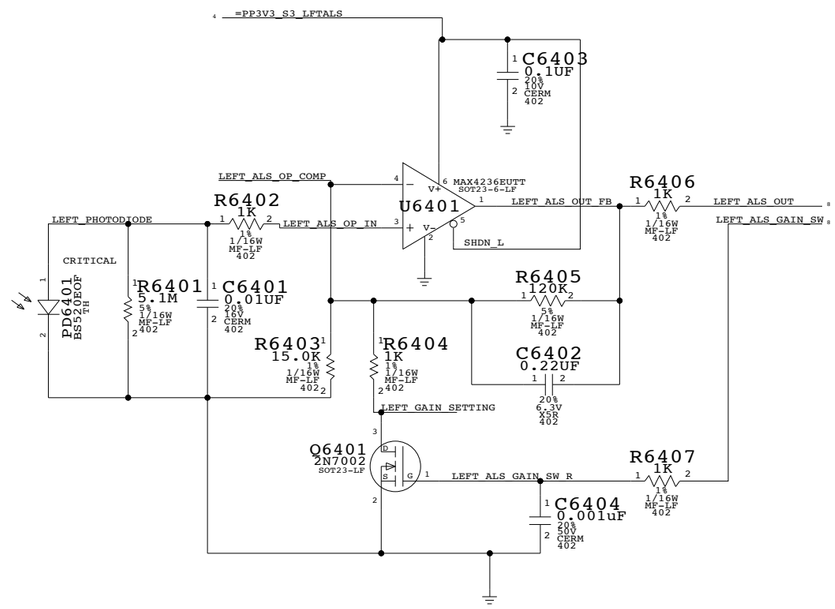

Left ALS

SYNC_MASTER=SIREN SYNC_DATE=01/06/2006

NOTICE OF PROPRIETARY PROPERTY

THE INFORMATION CONTAINED HEREIN IS THE PROPRIETARY PROPERTY OF APPLE COMPUTER, INC. THE POSSESSOR AGREES TO THE FOLLOWING

I TO MAINTAIN THE DOCUMENT IN CONFIDENCE

II NOT TO REPRODUCE OR COPY IT

III NOT TO REVEAL OR PUBLISH IN WHOLE OR PART

APPLE COMPUTER INC.

SIZE	DRAWING NUMBER	REV.
D	051-7066	02
SCALE NONE	SHT 64 OF 87	

AUDIO CODEC

APPLE P/N 353S1345

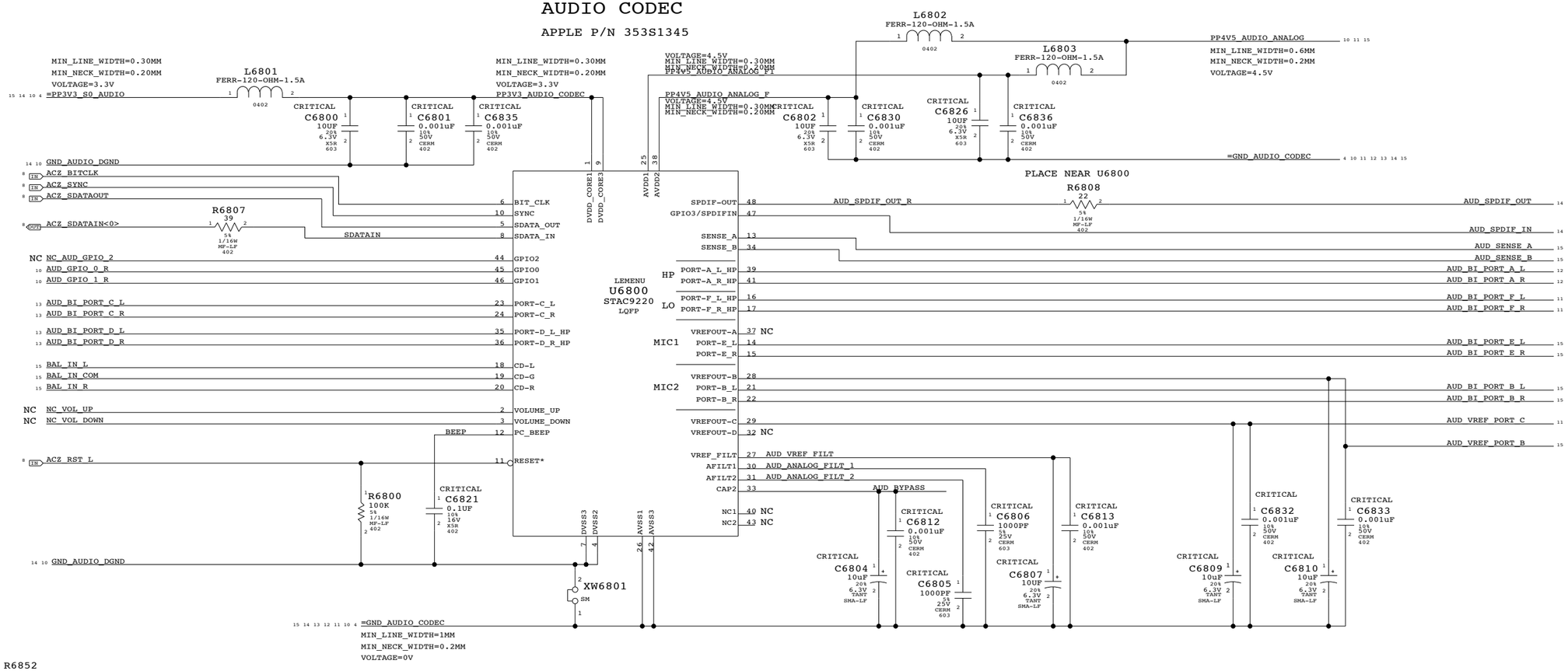

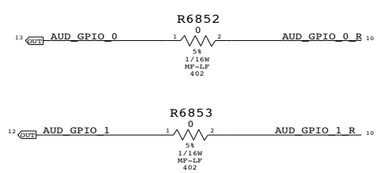

4.5V POWER SUPPLY FOR CODEC

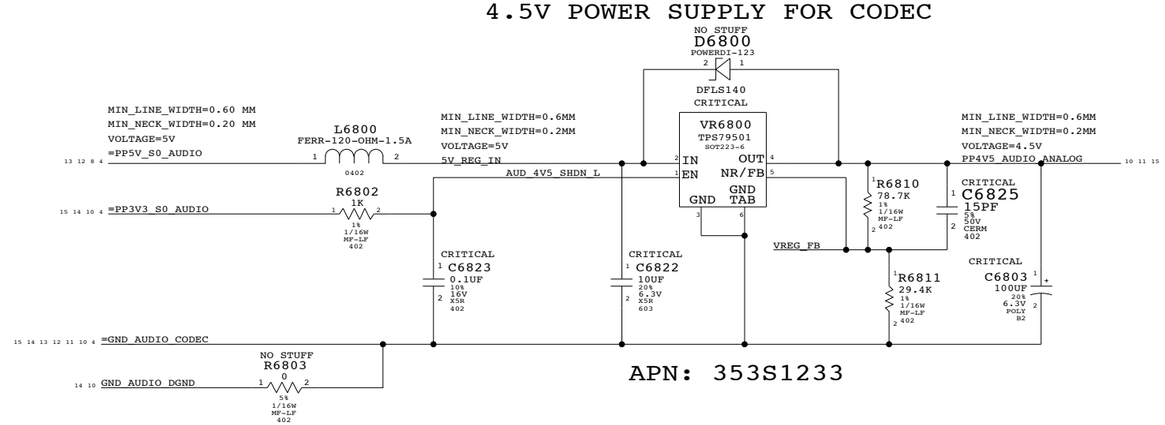

APN: 353S1233

AUDIO DIGITAL GROUND ISOLATION

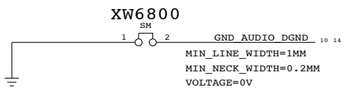

AUDIO: CODEC	
SYNC_MASTER=AUDIO_M9_PRO_LIO	SYNC_DATE=01/06/2006

NOTICE OF PROPRIETARY PROPERTY

THE INFORMATION CONTAINED HEREIN IS THE PROPRIETARY PROPERTY OF APPLE COMPUTER, INC. THE POSSESSOR AGREES TO THE FOLLOWING

I TO MAINTAIN THE DOCUMENT IN CONFIDENCE

II NOT TO REPRODUCE OR COPY IT

III NOT TO REVEAL OR PUBLISH IN WHOLE OR PART

APPLE COMPUTER INC.

SIZE	DRAWING NUMBER	REV.
D	051-7066	02
SCALE NONE	SHT 68 OF 87	

Pseudo-Diff Line-In Filter
GAIN = -7.1DB AV = 0.44
FC = 2.4 HZ

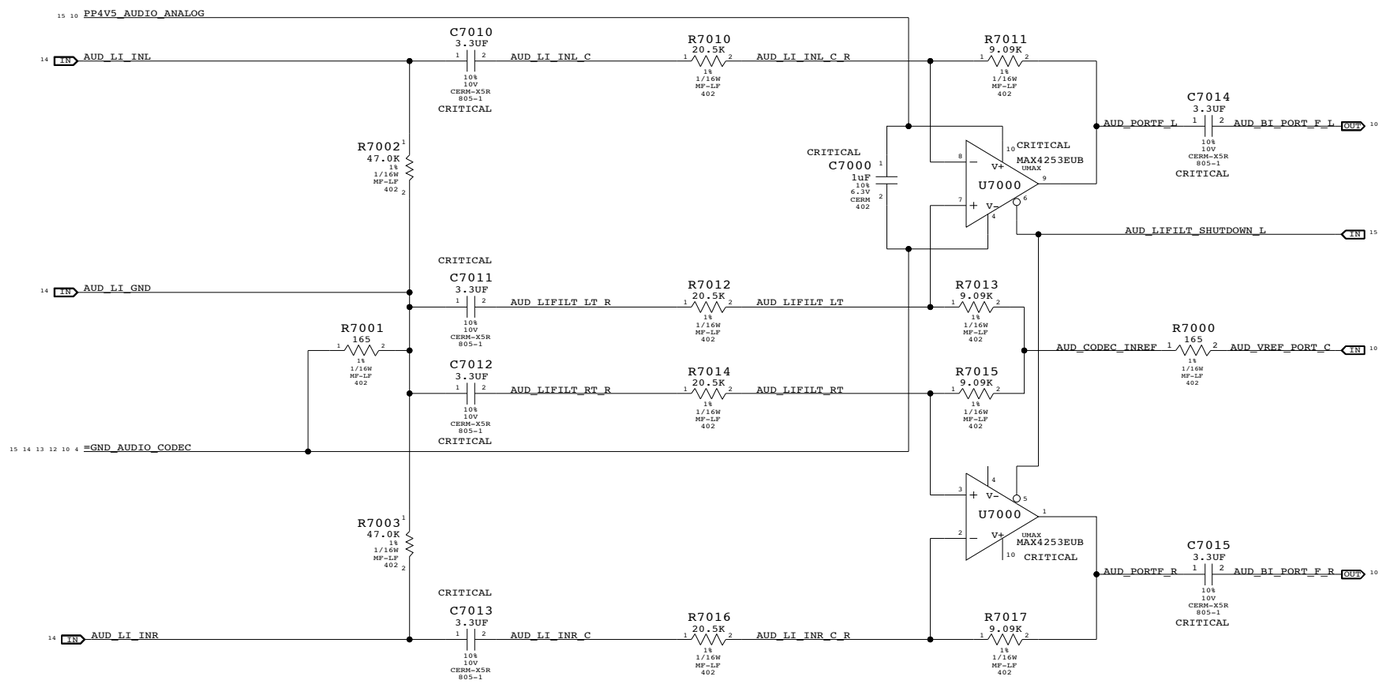

AUDIO: LINE IN

SYNC_MASTER=AUDIO_M9_PRO_LIO SYNC_DATE=01/06/2006

NOTICE OF PROPRIETARY PROPERTY

THE INFORMATION CONTAINED HEREIN IS THE PROPRIETARY PROPERTY OF APPLE COMPUTER, INC. THE POSSESSOR AGREES TO THE FOLLOWING

I TO MAINTAIN THE DOCUMENT IN CONFIDENCE

II NOT TO REPRODUCE OR COPY IT

III NOT TO REVEAL OR PUBLISH IN WHOLE OR PART

APPLE COMPUTER INC.

SIZE	DRAWING NUMBER	REV.
D	051-7066	02
SCALE NONE	SHT 70 OF 87	

Headphone Amplifier (MAX9722)
APN:353S0959
VOLTAGE GAIN:1.4

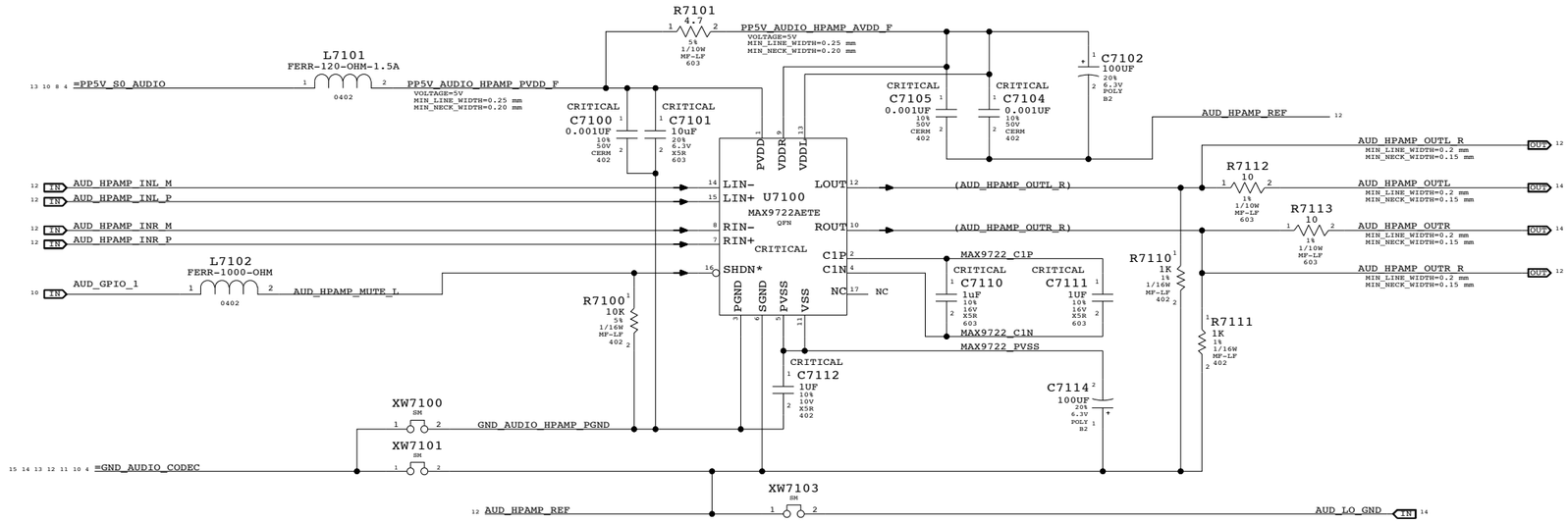

2nd Order DAC Filter
HP:1.6 HZ

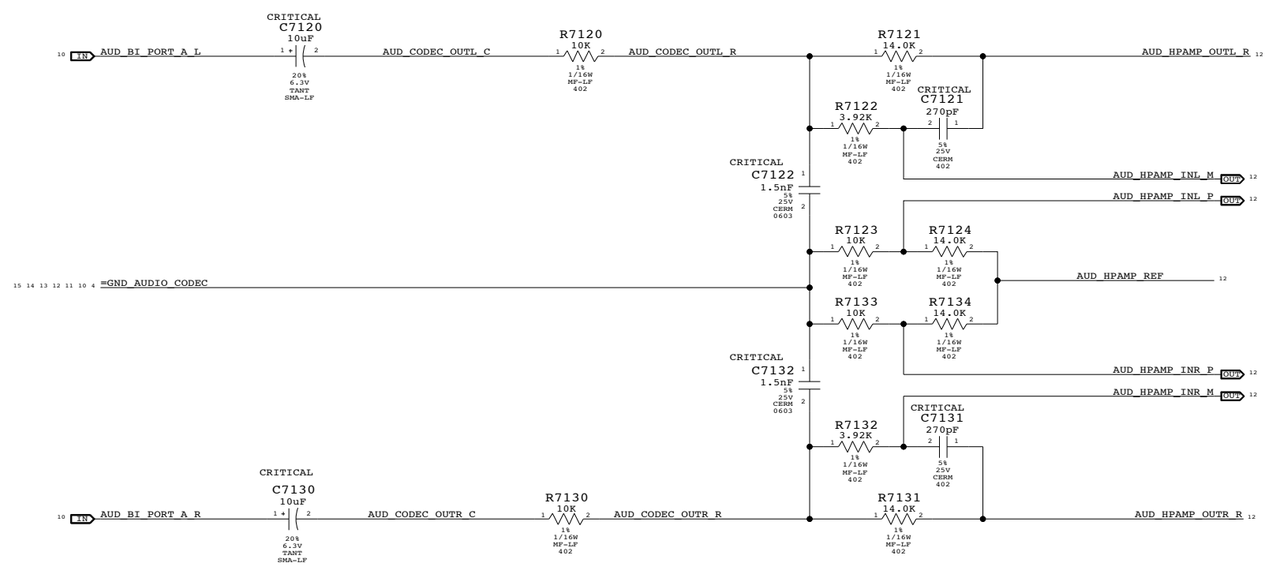

AUDIO: HEADPHONE AMP

SYNC_MASTER=AUDIO_M9_PRO_LIO SYNC_DATE=01/06/2006

NOTICE OF PROPRIETARY PROPERTY

THE INFORMATION CONTAINED HEREIN IS THE PROPRIETARY PROPERTY OF APPLE COMPUTER, INC. THE POSSESSOR AGREES TO THE FOLLOWING

I TO MAINTAIN THE DOCUMENT IN CONFIDENCE

II NOT TO REPRODUCE OR COPY IT

III NOT TO REVEAL OR PUBLISH IN WHOLE OR PART

APPLE COMPUTER INC.

SIZE	DRAWING NUMBER	REV.
D	051-7066	02
SCALE NONE	SHT 71 OF 87	

SPEAKER AMPLIFIERS (MAX9705) APN: 353S1355 TURN ON TIME: 30MS
Gain = 6dB 80 < FC < 132Hz TURN ON DELAY: 60MS

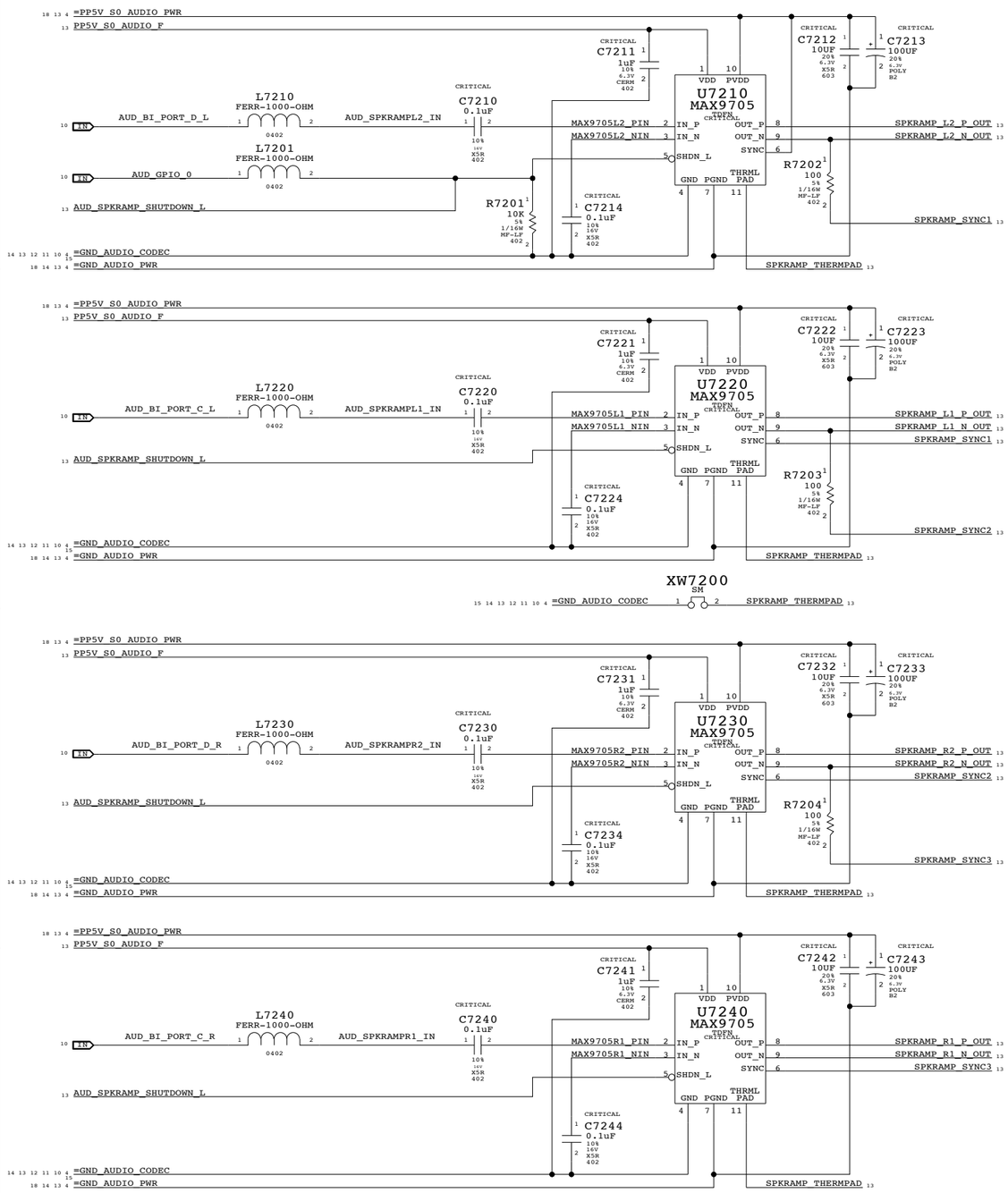

EMI FILTERS FOR AMPLIFIER OUTPUTS

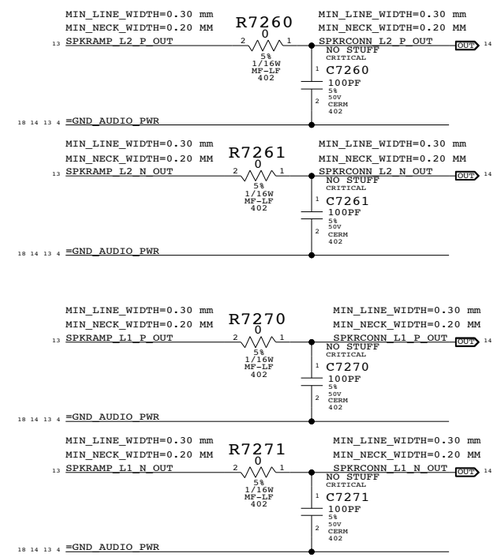

POWER AMPLIFIER SUPPLY BULK CAPS

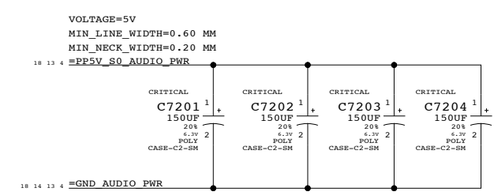

ANALOG POWER RAIL

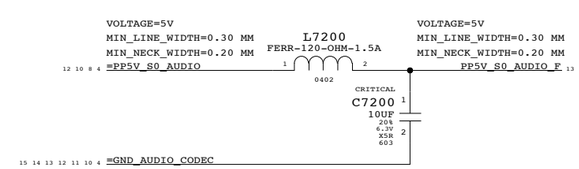

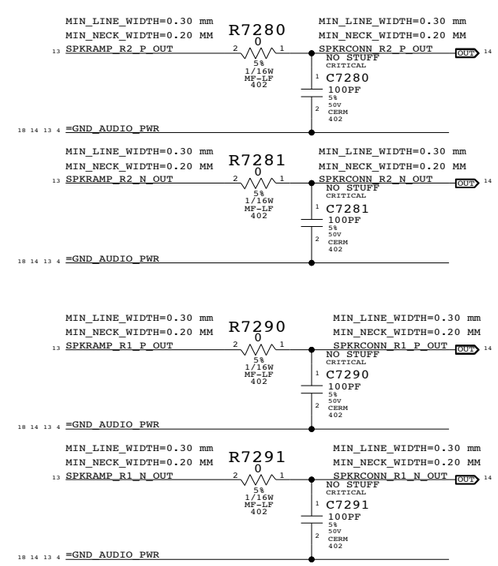

AUDIO: SPEAKER AMP

SYNC_MASTER=AUDIO_M9_PRO_LIO SYNC_DATE=01/06/2006

NOTICE OF PROPRIETARY PROPERTY

THE INFORMATION CONTAINED HEREIN IS THE PROPRIETARY PROPERTY OF APPLE COMPUTER, INC. THE POSSESSOR AGREES TO THE FOLLOWING

I TO MAINTAIN THE DOCUMENT IN CONFIDENCE

II NOT TO REPRODUCE OR COPY IT

III NOT TO REVEAL OR PUBLISH IN WHOLE OR PART

APPLE COMPUTER INC.

SIZE	DRAWING NUMBER	REV.
D	051-7066	02
SCALE NONE	SHT 72 OF 87	

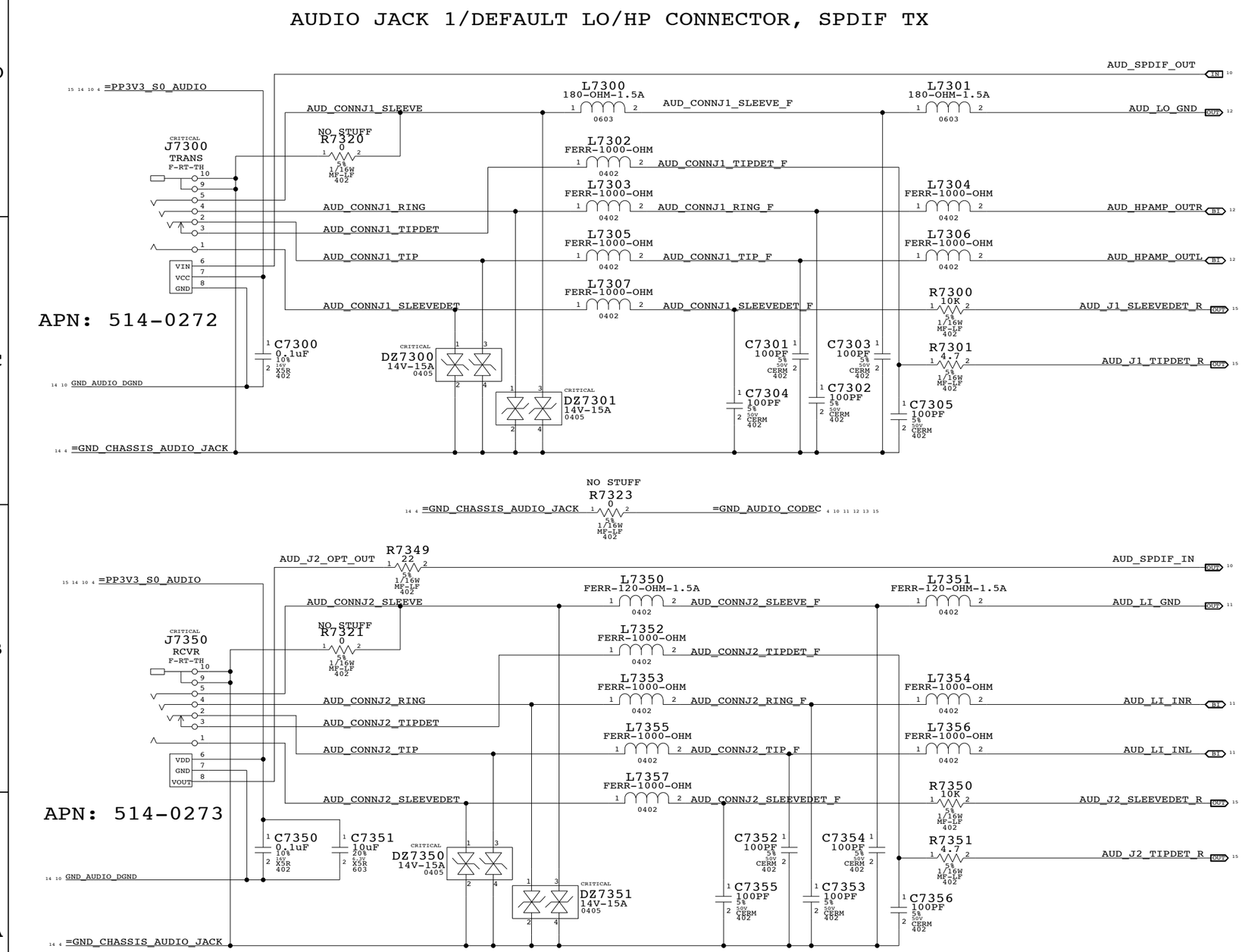

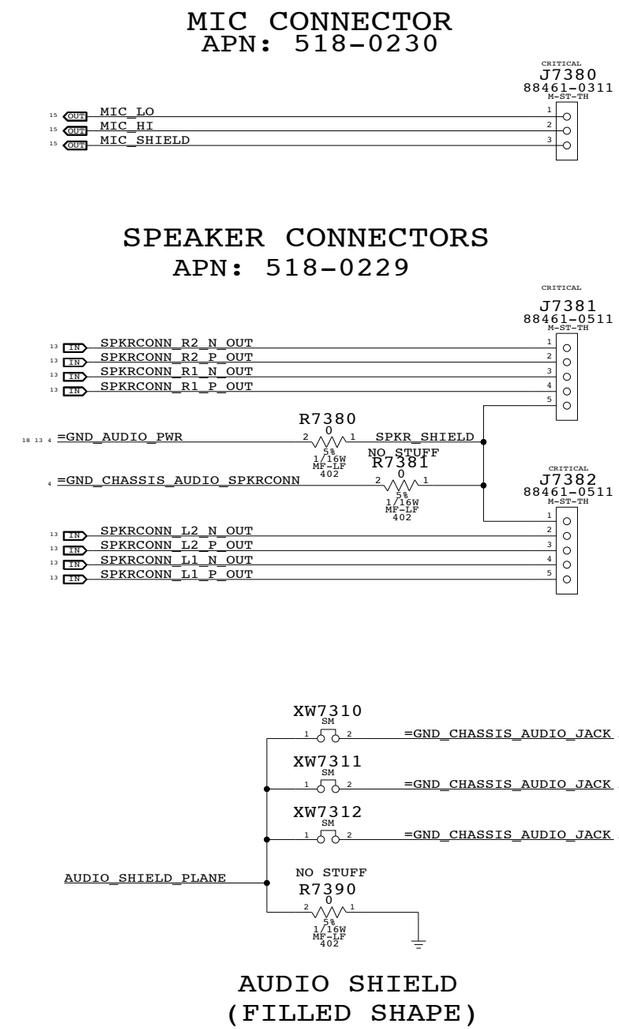

AUDIO: JACKS

SYNC_MASTER=AUDIO_M9_PRO_LIO SYNC_DATE=01/19/2006

NOTICE OF PROPRIETARY PROPERTY

THE INFORMATION CONTAINED HEREIN IS THE PROPRIETARY PROPERTY OF APPLE COMPUTER, INC. THE POSSESSOR AGREES TO THE FOLLOWING

I TO MAINTAIN THE DOCUMENT IN CONFIDENCE

II NOT TO REPRODUCE OR COPY IT

III NOT TO REVEAL OR PUBLISH IN WHOLE OR PART

APPLE COMPUTER INC.

SIZE	DRAWING NUMBER	REV.
D	051-7066	02
SCALE NONE	SHT 73 OF 87	

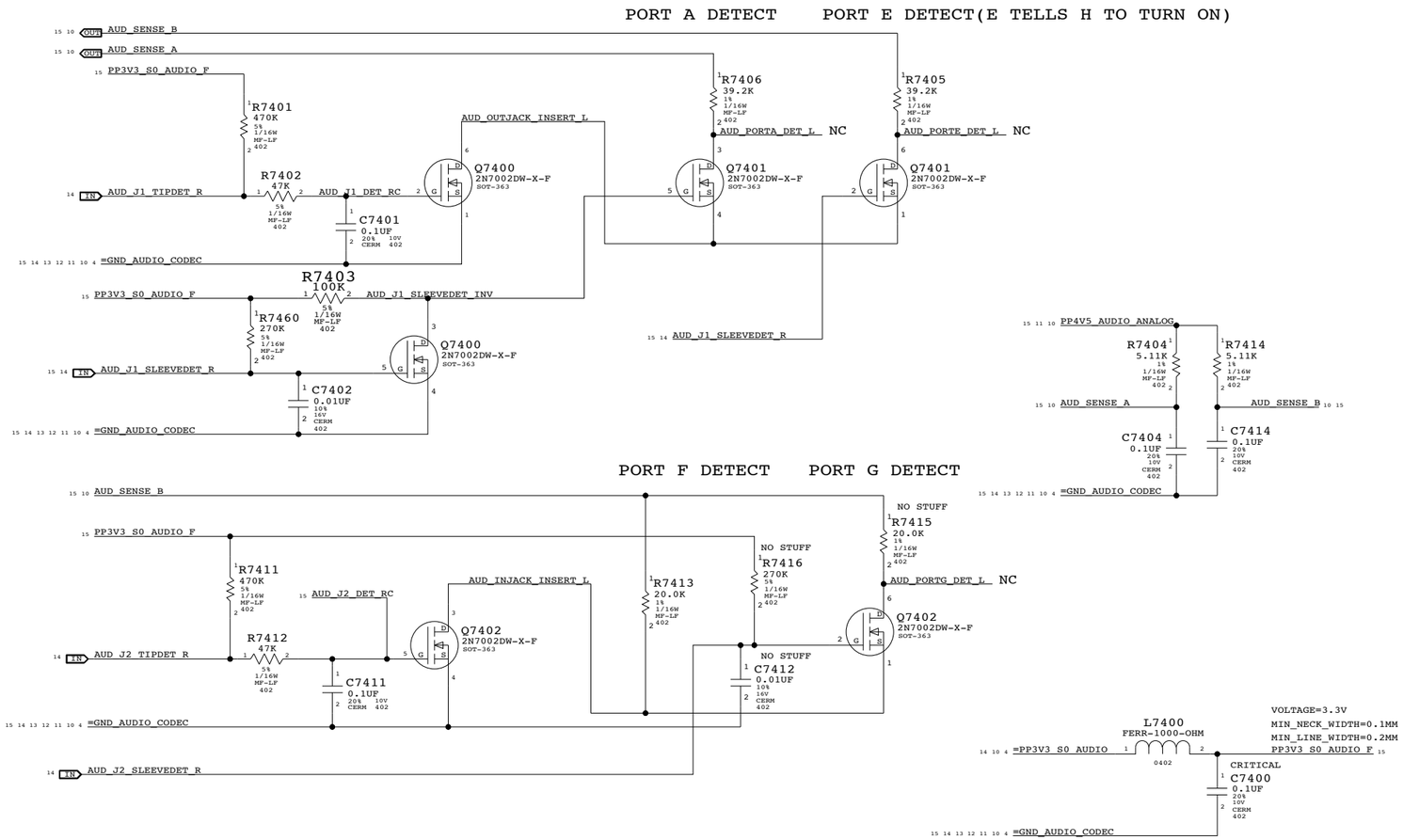

CODEC PORT ASSIGNMENTS

PORT A :HEADPHONE/LINE OUT
PORT B :MICROPHONE ON BOTH CH (ADC 0)
PORT C :TRANSDUCER 1 ON LEFT/RIGHT SPEAKER
PORT D :TRANSDUCER 2 ON LEFT/RIGHT SPEAKER
PORT E :SW USES TO TRIGGER DIGITAL OUT
PORT F :LINE IN (ADC 1)
CD INPUT :UNUSED

AUDIO: JACK TRANSLATORS

SYNC_MASTER=AUDIO_M9_PRO_LIO SYNC_DATE=01/06/2006

NOTICE OF PROPRIETARY PROPERTY

THE INFORMATION CONTAINED HEREIN IS THE PROPRIETARY PROPERTY OF APPLE COMPUTER, INC. THE POSSESSOR AGREES TO THE FOLLOWING

I TO MAINTAIN THE DOCUMENT IN CONFIDENCE
II NOT TO REPRODUCE OR COPY IT
III NOT TO REVEAL OR PUBLISH IN WHOLE OR PART

APPLE COMPUTER INC.

SIZE	DRAWING NUMBER	REV.
D	051-7066	02
SCALE NONE	SHT 74 OF 87	

3.3V S3/S0 Power Supply

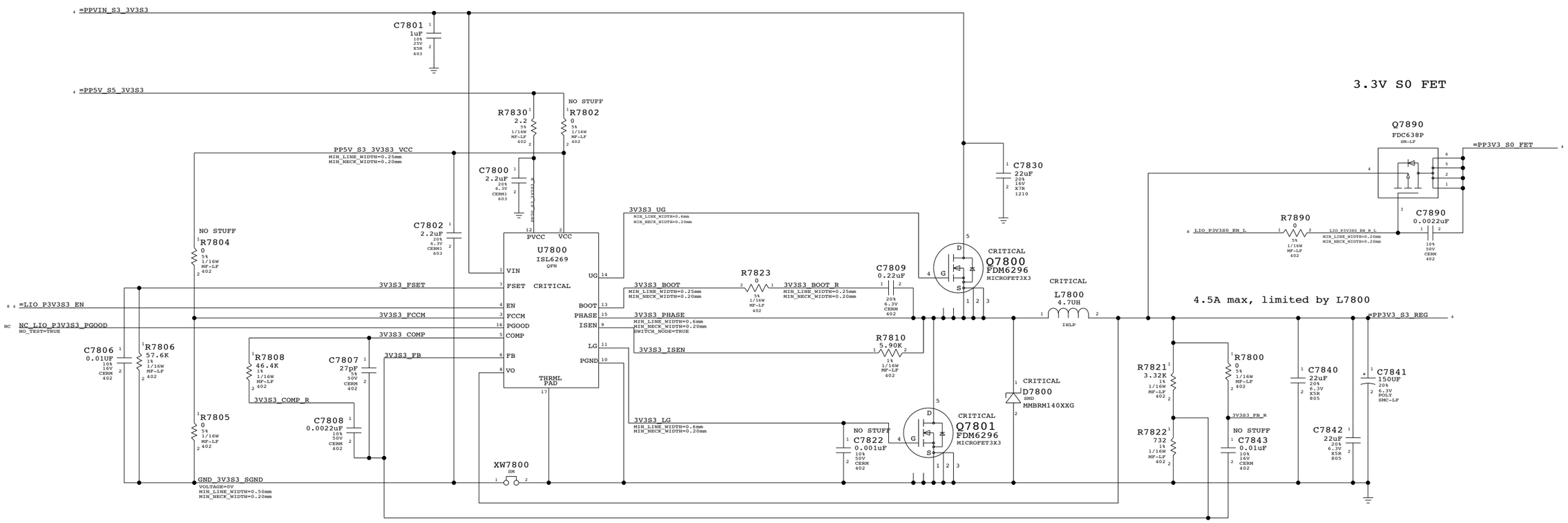

3.3V Supply

SYNC_MASTER=SIREN SYNC_DATE=01/06/2006

NOTICE OF PROPRIETARY PROPERTY

THE INFORMATION CONTAINED HEREIN IS THE PROPRIETARY PROPERTY OF APPLE COMPUTER, INC. THE POSSESSOR AGREES TO THE FOLLOWING

I TO MAINTAIN THE DOCUMENT IN CONFIDENCE

II NOT TO REPRODUCE OR COPY IT

III NOT TO REVEAL OR PUBLISH IN WHOLE OR PART

APPLE COMPUTER INC.

SIZE	DRAWING NUMBER	REV.
D	051-7066	02
SCALE NONE	SHT 78 OF 87	

DC Power Jack

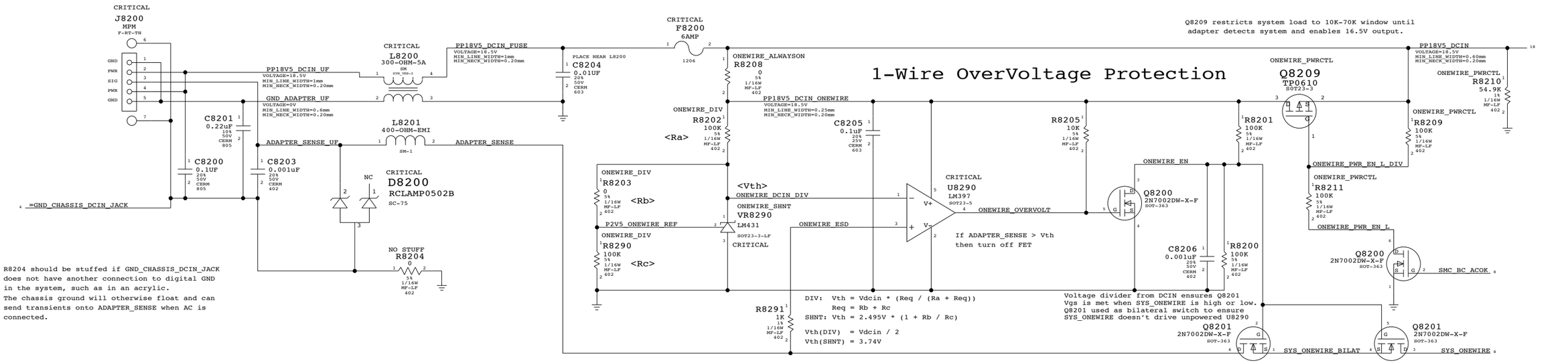

R8204 should be stuffed if GND_CHASSIS_DCIN_JACK does not have another connection to digital GND in the system, such as in an acrylic.
The chassis ground will otherwise float and can send transients onto ADAPTER_SENSE when AC is connected.

DIV: Vth = Vdcin * (Req / (Ra + Req))
Req = Rb + Rc
SHNT: Vth = 2.495V * (1 + Rb / Rc)

Vth(DIV) = Vdcin / 2
Vth(SHNT) = 3.74V

Voltage divider from DCIN ensures Q8201
Vgs is met when SYS_ONEWIRE is high or low.
Q8201 used as bilateral switch to ensure
SYS_ONEWIRE doesn't drive unpowered U8290

PART NUMBER	QTY	DESCRIPTION	REFERENCE DES	CRITICAL	BOM OPTION
116S0085	1	RES,6.2K,5%,1/16W,0402,LF	R8202		ONEWIRE_SHNT
114S0315	1	RES,10K,1%,1/16W,0402,LF	R8203		ONEWIRE_SHNT
114S0343	1	RES,20K,1%,1/16W,0402,LF	R8290		ONEWIRE_SHNT

ONEWIRE_SHNT BOM option allows the use of an adjustable shunt voltage regulator to provide the reference to the LM397 comparator. This allows the protection circuit to enforce a ~3.7V max signal on ADAPTER_SENSE instead of the voltage divider DCIN/2 approach.

R8202 value ensures 1mA current for DCIN >= 13.4V per LM431 spec.

DC-In & Battery Connectors

SYNC_MASTER=SIREN SYNC_DATE=01/06/2006

NOTICE OF PROPRIETARY PROPERTY

THE INFORMATION CONTAINED HEREIN IS THE PROPRIETARY PROPERTY OF APPLE COMPUTER, INC. THE POSSESSOR AGREES TO THE FOLLOWING

I TO MAINTAIN THE DOCUMENT IN CONFIDENCE
II NOT TO REPRODUCE OR COPY IT
III NOT TO REVEAL OR PUBLISH IN WHOLE OR PART

APPLE COMPUTER INC.

SIZE	DRAWING NUMBER	REV.
D	051-7066	02
SCALE NONE	SHT 82 OF 87	

Left I/O Power Connector

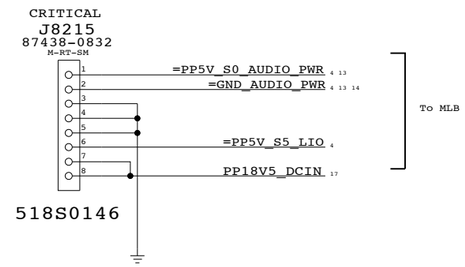

LEFT I/O POWER CONNECTOR

SYNC_MASTER=SIREN SYNC_DATE=01/06/2006

NOTICE OF PROPRIETARY PROPERTY

THE INFORMATION CONTAINED HEREIN IS THE PROPRIETARY PROPERTY OF APPLE COMPUTER, INC. THE POSSESSOR AGREES TO THE FOLLOWING

I TO MAINTAIN THE DOCUMENT IN CONFIDENCE

II NOT TO REPRODUCE OR COPY IT

III NOT TO REVEAL OR PUBLISH IN WHOLE OR PART

APPLE COMPUTER INC.

SIZE	DRAWING NUMBER	REV.
D	051-7066	02
SCALE NONE	SHT 84 OF 87	

Title: Basenet Report
Design: alt_lio
Date: Jan 19 16:34:21 2006

Base nets and synonyms for alt_lio_lib.ALT_LIO(@alt_lio_lib.alt_lio(sch_1))

Base Signal	Synonyms	Location([Zone][dir])
3V3S3_BOOT	3V3S3_BOOT - @alt_lio_lib.ALT_LIO	16C5
3V3S3_BOOT_R	3V3S3_BOOT_R - @alt_lio_lib.ALT_LIO	16C5
3V3S3_COMP	3V3S3_COMP - @alt_lio_lib.ALT_LIO	16B6
3V3S3_COMP_R	3V3S3_COMP_R - @alt_lio_lib.ALT_LIO	16B7
3V3S3_FB	3V3S3_FB - @alt_lio_lib.ALT_LIO	16B6
3V3S3_FB_R	3V3S3_FB_R - @alt_lio_lib.ALT_LIO	16B2
3V3S3_FCCM	3V3S3_FCCM - @alt_lio_lib.ALT_LIO	16B6
3V3S3_FSET	3V3S3_FSET - @alt_lio_lib.ALT_LIO	16C6
3V3S3_ISEN	3V3S3_ISEN - @alt_lio_lib.ALT_LIO	16B5
3V3S3_LG	3V3S3_LG - @alt_lio_lib.ALT_LIO	16B5
3V3S3_PHASE	3V3S3_PHASE - @alt_lio_lib.ALT_LIO	16B4
3V3S3_UG	3V3S3_UG - @alt_lio_lib.ALT_LIO	16C5
5V_REG_IN	5V_REG_IN - @alt_lio_lib.ALT_LIO	10A4
=EXCARD_CLKREQ_L	=EXCARD_CLKREQ_L - @alt_lio_lib.ALT_LIO	4C5 8C6
	EXCARD_CLKREQ_L - @alt_lio_lib.ALT_LIO	4C4 6B2
=EXCARD_OC_L	=EXCARD_OC_L - @alt_lio_lib.ALT_LIO	4C5 8C6
	EXCARD_OC_L - @alt_lio_lib.ALT_LIO	4C4 6B4
=GND_AUDIO	=GND_AUDIO - @alt_lio_lib.ALT_LIO	4A8 8B6
	=GND_AUDIO_CODEC - @alt_lio_lib.ALT_LIO	4A7 10A6 10B6 10D2 11B7 12B6 12C6 13A8 13B2 13B6 13B8 13C8 13C8 14B5 15A3 15A4 15A8 15B5 15B8 15C5 15C8 15D8
	GND_AUDIO - @alt_lio_lib.ALT_LIO	4A7
	=GND_AUDIO_CODEC - @alt_lio_lib.ALT_LIO	4A7 10A6 10B6 10D2 11B7 12B6 12C6 13A8 13B2 13B6 13B8 13C8 13C8 14B5 15A3 15A4 15A8 15B5 15B8 15C5 15C8 15D8
=GND_AUDIO_PWR	=GND_AUDIO_PWR - @alt_lio_lib.ALT_LIO	4B8 13A4 13A4 13A8 13B4 13B4 13B8 13C2 13C4 13C4 13C4 13C8 13C8 13D4 14C3 18C4
	GND_AUDIO_PWR - @alt_lio_lib.ALT_LIO	4B7
=GND_CHASSIS_AUDIO_JACK	=GND_CHASSIS_AUDIO_JACK - @alt_lio_lib.ALT_LIO	4A7 14A8 14B1 14B1 14B1 14B7 14C8
	=GND_CHASSIS_AUDIO_MIC - @alt_lio_lib.ALT_LIO	4A7 15A4
	CHASSIS_GND2 - @alt_lio_lib.ALT_LIO	4A8
=GND_CHASSIS_AUDIO_SPKRCONN	=GND_CHASSIS_AUDIO_MIC - @alt_lio_lib.ALT_LIO	4A7 15A4
	CHASSIS_GND3 - @alt_lio_lib.ALT_LIO	4A8
=GND_CHASSIS_DCIN_JACK	=GND_CHASSIS_DCIN_JACK - @alt_lio_lib.ALT_LIO	4A7 17C8
	=GND_CHASSIS_LTUSB - @alt_lio_lib.ALT_LIO	4A7 5A2 5C2
	CHASSIS_GND1 - @alt_lio_lib.ALT_LIO	4A8
	=GND_CHASSIS_LTUSB - @alt_lio_lib.ALT_LIO	4A7 5A2 5C2
=GND_CHASSIS_LIO_FLEX	=GND_CHASSIS_LIO_FLEX - @alt_lio_lib.ALT_LIO	4A7 8B3
	=GND_CHASSIS_PCIE_EXCARD - @alt_lio_lib.ALT_LIO	4A7 6B2
	CHASSIS_GND4 - @alt_lio_lib.ALT_LIO	4A8
	=GND_CHASSIS_PCIE_EXCARD - @alt_lio_lib.ALT_LIO	4A7 6B2
=LIO_P3V3S3_EN	=LIO_P3V3S3_EN - @alt_lio_lib.ALT_LIO	4C4 8C6 16B8
	=USB_LEFT_PWRON - @alt_lio_lib.ALT_LIO	4C2 5C8
	LIO_P3V3S3_EN - @alt_lio_lib.ALT_LIO	4C3
	=USB_LEFT_PWRON - @alt_lio_lib.ALT_LIO	4C2 5C8
=LT2USB_OC_L	=LT2USB_OC_L - @alt_lio_lib.ALT_LIO	4A3 8C6
	USB_LEFT2_OC_L - @alt_lio_lib.ALT_LIO	4A5 5B7
=LTUSB_OC_L	=LTUSB_OC_L - @alt_lio_lib.ALT_LIO	4A3 8C6
	USB_LEFT_OC_L - @alt_lio_lib.ALT_LIO	4A5 5B7
=MINI_CLKREQ_L	=MINI_CLKREQ_L - @alt_lio_lib.ALT_LIO	4B5 8C6
	MINI_CLKREQ_L - @alt_lio_lib.ALT_LIO	4B4 7C6
=PCIE_CLK100M_EXCARD_N	=PCIE_CLK100M_EXCARD_N - @alt_lio_lib.ALT_LIO	4D5 8B1
	PCIE_CLK100M_EXCARD_N - @alt_lio_lib.ALT_LIO	4D2 6C3
=PCIE_CLK100M_EXCARD_P	=PCIE_CLK100M_EXCARD_P - @alt_lio_lib.ALT_LIO	4D5 8B1
	PCIE_CLK100M_EXCARD_P - @alt_lio_lib.ALT_LIO	4D2 6C3
=PCIE_CLK100M_MINI_N	=PCIE_CLK100M_MINI_N - @alt_lio_lib.ALT_LIO	4B5 8C1
	PCIE_CLK100M_MINI_N - @alt_lio_lib.ALT_LIO	4B2 7C6
=PCIE_CLK100M_MINI_P	=PCIE_CLK100M_MINI_P - @alt_lio_lib.ALT_LIO	4B5 8C1
	PCIE_CLK100M_MINI_P - @alt_lio_lib.ALT_LIO	4B2 7C6
=PCIE_EXCARD_D2R_N	=PCIE_EXCARD_D2R_N - @alt_lio_lib.ALT_LIO	4D5 8B3
	PCIE_EXCARD_D2R_N - @alt_lio_lib.ALT_LIO	4D2 6C3
=PCIE_EXCARD_D2R_P	=PCIE_EXCARD_D2R_P - @alt_lio_lib.ALT_LIO	4D5 8B3
	PCIE_EXCARD_D2R_P - @alt_lio_lib.ALT_LIO	4D2 6C3
=PCIE_EXCARD_R2D_N	=PCIE_EXCARD_R2D_N - @alt_lio_lib.ALT_LIO	4D5 8B3
	PCIE_EXCARD_R2D_N - @alt_lio_lib.ALT_LIO	4D2 6C3
=PCIE_EXCARD_R2D_P	=PCIE_EXCARD_R2D_P - @alt_lio_lib.ALT_LIO	4D5 8B3
	PCIE_EXCARD_R2D_P - @alt_lio_lib.ALT_LIO	4D2 6C3
=PCIE_MINI_D2R_N	=PCIE_MINI_D2R_N - @alt_lio_lib.ALT_LIO	4B5 8C3
	PCIE_MINI_D2R_N - @alt_lio_lib.ALT_LIO	4B2 7C6
=PCIE_MINI_D2R_P	=PCIE_MINI_D2R_P - @alt_lio_lib.ALT_LIO	4B5 8C3
	PCIE_MINI_D2R_P - @alt_lio_lib.ALT_LIO	4B2 7C6
=PCIE_MINI_R2D_N	=PCIE_MINI_R2D_N - @alt_lio_lib.ALT_LIO	4B5 8C3
	PCIE_MINI_R2D_N - @alt_lio_lib.ALT_LIO	4B2 7B6
=PCIE_MINI_R2D_P	=PCIE_MINI_R2D_P - @alt_lio_lib.ALT_LIO	4C5 8C3
	PCIE_MINI_R2D_P - @alt_lio_lib.ALT_LIO	4C2 7B6
=PP1V5_S0_EXCARD	=PP1V5_S0_EXCARD - @alt_lio_lib.ALT_LIO	4C7 6C7 6C8
	=PP1V5_S0_LIO - @alt_lio_lib.ALT_LIO	4C8 8B3
	=PP1V5_S0_MINI - @alt_lio_lib.ALT_LIO	4C7 7C2
	PP1V5_S0_LIO - @alt_lio_lib.ALT_LIO	4C7
	=PP1V5_S0_MINI - @alt_lio_lib.ALT_LIO	4C7 7C2
	=PP1V5_S0_LIO - @alt_lio_lib.ALT_LIO	4C8 8B3
=PP3V3_S0_AUDIO	=PP3V3_S0_AUDIO - @alt_lio_lib.ALT_LIO	4B7 10A6 10D7 14B8 14D8 15B5
	=PP3V3_S0_EXCARD - @alt_lio_lib.ALT_LIO	4B7 6B4 6C7
	=PP3V3_S0_FET - @alt_lio_lib.ALT_LIO	4B8 16C1
	=PP3V3_S0_MINI - @alt_lio_lib.ALT_LIO	4B7 7D2
	PP3V3_S0_LIO - @alt_lio_lib.ALT_LIO	4C7
	=PP3V3_S0_MINI - @alt_lio_lib.ALT_LIO	4B7 7D2
	=PP3V3_S0_FET - @alt_lio_lib.ALT_LIO	4B8 16C1
	=PP3V3_S0_EXCARD - @alt_lio_lib.ALT_LIO	4B7 6B4 6C7
=PP3V3_S3_EXCARD	=PP3V3_S3_EXCARD - @alt_lio_lib.ALT_LIO	4C7 6A5 6B8 6C7 6C8
	=PP3V3_S3_LFTALS - @alt_lio_lib.ALT_LIO	4C7 9D6
	=PP3V3_S3_REG - @alt_lio_lib.ALT_LIO	4C8 16B1
	=PP3V3_S3_MINI - @alt_lio_lib.ALT_LIO	4C7 7C2
	PP3V3_S3_LIO - @alt_lio_lib.ALT_LIO	4C7
	=PP3V3_S3_REG - @alt_lio_lib.ALT_LIO	4C8 16B1
	=PP3V3_S3_MINI - @alt_lio_lib.ALT_LIO	4C7 7C2
	=PP3V3_S3_LFTALS - @alt_lio_lib.ALT_LIO	4C7 9D6
=PP5V_S0_AUDIO	=PP5V_S0_AUDIO - @alt_lio_lib.ALT_LIO	4B8 8B3 10A6 12D7 13B2
	PP5V_S0_AUDIO_LIO - @alt_lio_lib.ALT_LIO	4B7
=PP5V_S0_AUDIO_PWR	=PP5V_S0_AUDIO_PWR - @alt_lio_lib.ALT_LIO	4B8 13A8 13B8 13C2 13C8 13D8 18C4
	PP5V_S0_AUDIO_PWR_LIO - @alt_lio_lib.ALT_LIO	4B7
=PP5V_S5_3V3S3	=PP5V_S5_3V3S3 - @alt_lio_lib.ALT_LIO	4B7 16C8
	=PP5V_S5_LIO - @alt_lio_lib.ALT_LIO	4B8 18C4
	=PP5V_S5_LTUSB - @alt_lio_lib.ALT_LIO	4B7 5B8 5D7
	PP5V_S5_LIO - @alt_lio_lib.ALT_LIO	4B7
	=PP5V_S5_LTUSB - @alt_lio_lib.ALT_LIO	4B7 5B8 5D7
	=PP5V_S5_LIO - @alt_lio_lib.ALT_LIO	4B8 18C4
=PPBUS_G3H_LIO_CONN	=PPBUS_G3H_LIO_CONN - @alt_lio_lib.ALT_LIO	4D8 8B3
	=PPVIN_S3_3V3S3 - @alt_lio_lib.ALT_LIO	4D6 16D8
	PPBUS_G3H_LIO_CONN - @alt_lio_lib.ALT_LIO	4D7
	=PPVIN_S3_3V3S3 - @alt_lio_lib.ALT_LIO	4D6 16D8
=SMBUS_EXCARD_SCL	=SMBUS_EXCARD_SCL - @alt_lio_lib.ALT_LIO	4A2 6C3
	=SMBUS_SB_SCL - @alt_lio_lib.ALT_LIO	4A4 8B6
	SMBUS_SB_SCL - @alt_lio_lib.ALT_LIO	4A2
=SMBUS_EXCARD_SDA	=SMBUS_EXCARD_SDA - @alt_lio_lib.ALT_LIO	4A4 6C3
	=SMBUS_SB_SDA - @alt_lio_lib.ALT_LIO	4A5 8B6
	SMBUS_SB_SDA - @alt_lio_lib.ALT_LIO	4A4
=SMBUS_MINI_SCL	=SMBUS_MINI_SCL - @alt_lio_lib.ALT_LIO	4A2 7B3
	SMBUS_MINI_SCL - @alt_lio_lib.ALT_LIO	4A3
=SMBUS_MINI_SDA	=SMBUS_MINI_SDA - @alt_lio_lib.ALT_LIO	4A3 7B3
	SMBUS_MINI_SDA - @alt_lio_lib.ALT_LIO	4A4
=USB2_EXCARD_N	=USB2_EXCARD_N - @alt_lio_lib.ALT_LIO	4D5 8C3
	USB2_EXCARD_N - @alt_lio_lib.ALT_LIO	4D2 6C3
=USB2_EXCARD_P	=USB2_EXCARD_P - @alt_lio_lib.ALT_LIO	4D5 8C3
	USB2_EXCARD_P - @alt_lio_lib.ALT_LIO	4D2 6C3
=USB2_LT2_N	=USB2_LT2_N - @alt_lio_lib.ALT_LIO	4A3 8C3
	USB_LEFT2_N - @alt_lio_lib.ALT_LIO	4A5 5C5
=USB2_LT2_P	=USB2_LT2_P - @alt_lio_lib.ALT_LIO	4A3 8C3
	USB_LEFT2_P - @alt_lio_lib.ALT_LIO	4A5 5C5
=USB2_LT_N	=USB2_LT_N - @alt_lio_lib.ALT_LIO	4A3 8C3
	USB_LEFT_N - @alt_lio_lib.ALT_LIO	4A5 5B5
=USB2_LT_P	=USB2_LT_P - @alt_lio_lib.ALT_LIO	4B3 8C3
	USB_LEFT_P - @alt_lio_lib.ALT_LIO	4B5 5B5
ACZ_BITCLK	ACZ_BITCLK - @alt_lio_lib.ALT_LIO	8B6 10D7
ACZ_RST_L	ACZ_RST_L - @alt_lio_lib.ALT_LIO	8B6 10C7
ACZ_SDATAIN<0>	ACZ_SDATAIN<0> - @alt_lio_lib.ALT_LIO	8B6 10C7
ACZ_SDATAOUT	ACZ_SDATAOUT - @alt_lio_lib.ALT_LIO	8C6 10D7
ACZ_SYNC	ACZ_SYNC - @alt_lio_lib.ALT_LIO	8B6 10D7
ADAPTER_SENSE	ADAPTER_SENSE - @alt_lio_lib.ALT_LIO	17D6
ADAPTER_SENSE_UF	ADAPTER_SENSE_UF - @alt_lio_lib.ALT_LIO	17D7
AUDIO_SHIELD_PLANE	AUDIO_SHIELD_PLANE - @alt_lio_lib.ALT_LIO	14B3
AUD_4V5_SHDN_L	AUD_4V5_SHDN_L - @alt_lio_lib.ALT_LIO	10A4
AUD_ANALOG_FILT_1	AUD_ANALOG_FILT_1 - @alt_lio_lib.ALT_LIO	10C4
AUD_ANALOG_FILT_2	AUD_ANALOG_FILT_2 - @alt_lio_lib.ALT_LIO	10C4
AUD_BI_PORT_A_L	AUD_BI_PORT_A_L - @alt_lio_lib.ALT_LIO	10C1 12B7
AUD_BI_PORT_A_R	AUD_BI_PORT_A_R - @alt_lio_lib.ALT_LIO	10C1 12A7
AUD_BI_PORT_B_L	AUD_BI_PORT_B_L - @alt_lio_lib.ALT_LIO	10C1 15A4
	AUD_BI_PORT_B_R - @alt_lio_lib.ALT_LIO	10C1 15A4
AUD_BI_PORT_C_L	AUD_BI_PORT_C_L - @alt_lio_lib.ALT_LIO	10C7 13C8
AUD_BI_PORT_C_R	AUD_BI_PORT_C_R - @alt_lio_lib.ALT_LIO	10C7 13A8
AUD_BI_PORT_D_L	AUD_BI_PORT_D_L - @alt_lio_lib.ALT_LIO	10C7 13D8
AUD_BI_PORT_D_R	AUD_BI_PORT_D_R - @alt_lio_lib.ALT_LIO	10C7 13B8
AUD_BI_PORT_E_L	AUD_BI_PORT_E_L - @alt_lio_lib.ALT_LIO	10C1 15B3
AUD_BI_PORT_E_R	AUD_BI_PORT_E_R - @alt_lio_lib.ALT_LIO	10C1 15B3
AUD_BI_PORT_F_L	AUD_BI_PORT_F_L - @alt_lio_lib.ALT_LIO	10C1 11C2
AUD_BI_PORT_F_R	AUD_BI_PORT_F_R - @alt_lio_lib.ALT_LIO	10C1 11B2
AUD_BYPASS	AUD_BYPASS - @alt_lio_lib.ALT_LIO	10C4
AUD_CODEC_INREF	AUD_CODEC_INREF - @alt_lio_lib.ALT_LIO	11B3
AUD_CODEC_OUTL_C	AUD_CODEC_OUTL_C - @alt_lio_lib.ALT_LIO	12B6
AUD_CODEC_OUTL_R	AUD_CODEC_OUTL_R - @alt_lio_lib.ALT_LIO	12B5
AUD_CODEC_OUTR_C	AUD_CODEC_OUTR_C - @alt_lio_lib.ALT_LIO	12A6
AUD_CODEC_OUTR_R	AUD_CODEC_OUTR_R - @alt_lio_lib.ALT_LIO	12A5
AUD_CONNJ1_RING	AUD_CONNJ1_RING - @alt_lio_lib.ALT_LIO	14C7
AUD_CONNJ1_RING_F	AUD_CONNJ1_RING_F - @alt_lio_lib.ALT_LIO	14C6
AUD_CONNJ1_SLEEVE	AUD_CONNJ1_SLEEVE - @alt_lio_lib.ALT_LIO	14D7
AUD_CONNJ1_SLEEVEDET	AUD_CONNJ1_SLEEVEDET - @alt_lio_lib.ALT_LIO	14C7
AUD_CONNJ1_SLEEVEDET_F	AUD_CONNJ1_SLEEVEDET_F - @alt_lio_lib.ALT_LIO	14C6
AUD_CONNJ1_SLEEVE_F	AUD_CONNJ1_SLEEVE_F - @alt_lio_lib.ALT_LIO	14D6
AUD_CONNJ1_TIP	AUD_CONNJ1_TIP - @alt_lio_lib.ALT_LIO	14C7
AUD_CONNJ1_TIPDET	AUD_CONNJ1_TIPDET - @alt_lio_lib.ALT_LIO	14C7
AUD_CONNJ1_TIPDET_F	AUD_CONNJ1_TIPDET_F - @alt_lio_lib.ALT_LIO	14D6
AUD_CONNJ1_TIP_F	AUD_CONNJ1_TIP_F - @alt_lio_lib.ALT_LIO	14C6
AUD_CONNJ2_RING	AUD_CONNJ2_RING - @alt_lio_lib.ALT_LIO	14B7
AUD_CONNJ2_RING_F	AUD_CONNJ2_RING_F - @alt_lio_lib.ALT_LIO	14B5
AUD_CONNJ2_SLEEVE	AUD_CONNJ2_SLEEVE - @alt_lio_lib.ALT_LIO	14B7
AUD_CONNJ2_SLEEVEDET	AUD_CONNJ2_SLEEVEDET - @alt_lio_lib.ALT_LIO	14A7
AUD_CONNJ2_SLEEVEDET_F	AUD_CONNJ2_SLEEVEDET_F - @alt_lio_lib.ALT_LIO	14A5
AUD_CONNJ2_SLEEVE_F	AUD_CONNJ2_SLEEVE_F - @alt_lio_lib.ALT_LIO	14B5
AUD_CONNJ2_TIP	AUD_CONNJ2_TIP - @alt_lio_lib.ALT_LIO	14B7
AUD_CONNJ2_TIPDET	AUD_CONNJ2_TIPDET - @alt_lio_lib.ALT_LIO	14B7
AUD_CONNJ2_TIPDET_F	AUD_CONNJ2_TIPDET_F - @alt_lio_lib.ALT_LIO	14B5
AUD_CONNJ2_TIP_F	AUD_CONNJ2_TIP_F - @alt_lio_lib.ALT_LIO	14B5
AUD_GPIO_0	AUD_GPIO_0 - @alt_lio_lib.ALT_LIO	10B8 13D8
AUD_GPIO_0_R	AUD_GPIO_0_R - @alt_lio_lib.ALT_LIO	10B7 10C7
AUD_GPIO_1	AUD_GPIO_1 - @alt_lio_lib.ALT_LIO	10B8 12C7
AUD_GPIO_1_R	AUD_GPIO_1_R - @alt_lio_lib.ALT_LIO	10B7 10C7
AUD_HPAMP_INL_M	AUD_HPAMP_INL_M - @alt_lio_lib.ALT_LIO	12B3 12D7
AUD_HPAMP_INL_P	AUD_HPAMP_INL_P - @alt_lio_lib.ALT_LIO	12B3 12D7
AUD_HPAMP_INR_M	AUD_HPAMP_INR_M - @alt_lio_lib.ALT_LIO	12A3 12C7
AUD_HPAMP_INR_P	AUD_HPAMP_INR_P - @alt_lio_lib.ALT_LIO	12A3 12C7
AUD_HPAMP_MUTE_L	AUD_HPAMP_MUTE_L - @alt_lio_lib.ALT_LIO	12C6
AUD_HPAMP_OUTL	AUD_HPAMP_OUTL - @alt_lio_lib.ALT_LIO	12D2 14C3
AUD_HPAMP_OUTL_R	AUD_HPAMP_OUTL_R - @alt_lio_lib.ALT_LIO	12B3 12D2
AUD_HPAMP_OUTR	AUD_HPAMP_OUTR - @alt_lio_lib.ALT_LIO	12C2 14C3
AUD_HPAMP_OUTR_R	AUD_HPAMP_OUTR_R - @alt_lio_lib.ALT_LIO	12A3 12C2
AUD_HPAMP_REF	AUD_HPAMP_REF - @alt_lio_lib.ALT_LIO	12B3 12C5 12D2
AUD_INJACK_INSERT_L	AUD_INJACK_INSERT_L - @alt_lio_lib.ALT_LIO	15C7
AUD_J1_DET_RC	AUD_J1_DET_RC - @alt_lio_lib.ALT_LIO	15D7
AUD_J1_SLEEVEDET_INV	AUD_J1_SLEEVEDET_INV - @alt_lio_lib.ALT_LIO	15C7
AUD_J1_SLEEVEDET_R	AUD_J1_SLEEVEDET_R - @alt_lio_lib.ALT_LIO	14C3 15C6 15C8
AUD_J1_TIPDET_R	AUD_J1_TIPDET_R - @alt_lio_lib.ALT_LIO	14C3 15D8
AUD_J2_DET_RC	AUD_J2_DET_RC - @alt_lio_lib.ALT_LIO	15A8 15C7
AUD_J2_OPT_OUT	AUD_J2_OPT_OUT - @alt_lio_lib.ALT_LIO	14B7
AUD_J2_SLEEVEDET_R	AUD_J2_SLEEVEDET_R - @alt_lio_lib.ALT_LIO	14A3 15B8
AUD_J2_TIPDET_R	AUD_J2_TIPDET_R - @alt_lio_lib.ALT_LIO	14A3 15B8
AUD_LIFILT_LT	AUD_LIFILT_LT - @alt_lio_lib.ALT_LIO	11C4
AUD_LIFILT_LT_R	AUD_LIFILT_LT_R - @alt_lio_lib.ALT_LIO	11C5
AUD_LIFILT_RT	AUD_LIFILT_RT - @alt_lio_lib.ALT_LIO	11B4
AUD_LIFILT_RT_R	AUD_LIFILT_RT_R - @alt_lio_lib.ALT_LIO	11B5
AUD_LIFILT_SHUTDOWN	AUD_LIFILT_SHUTDOWN - @alt_lio_lib.ALT_LIO	15A8
AUD_LIFILT_SHUTDOWN_L	AUD_LIFILT_SHUTDOWN_L - @alt_lio_lib.ALT_LIO	11C2 15A6
AUD_LI_GND	AUD_LI_GND - @alt_lio_lib.ALT_LIO	11C7 14B3
AUD_LI_INL	AUD_LI_INL - @alt_lio_lib.ALT_LIO	11C7 14B3
AUD_LI_INL_C	AUD_LI_INL_C - @alt_lio_lib.ALT_LIO	11C5
AUD_LI_INL_C_R	AUD_LI_INL_C_R - @alt_lio_lib.ALT_LIO	11C4
AUD_LI_INR	AUD_LI_INR - @alt_lio_lib.ALT_LIO	11B7 14B3
AUD_LI_INR_C	AUD_LI_INR_C - @alt_lio_lib.ALT_LIO	11B5
AUD_LI_INR_C_R	AUD_LI_INR_C_R - @alt_lio_lib.ALT_LIO	11B4
AUD_LO_GND	AUD_LO_GND - @alt_lio_lib.ALT_LIO	12C2 14D3
AUD_OUTJACK_INSERT_L	AUD_OUTJACK_INSERT_L - @alt_lio_lib.ALT_LIO	15D7
AUD_PORTA_DET_L	AUD_PORTA_DET_L - @alt_lio_lib.ALT_LIO	15D5
AUD_PORTE_DET_L	AUD_PORTE_DET_L - @alt_lio_lib.ALT_LIO	15D5
AUD_PORTF_L	AUD_PORTF_L - @alt_lio_lib.ALT_LIO	11C3
AUD_PORTF_R	AUD_PORTF_R - @alt_lio_lib.ALT_LIO	11B3
AUD_PORTG_DET_L	AUD_PORTG_DET_L - @alt_lio_lib.ALT_LIO	15C5
AUD_SENSE_A	AUD_SENSE_A - @alt_lio_lib.ALT_LIO	10C1 15C5 15D8
AUD_SENSE_B	AUD_SENSE_B - @alt_lio_lib.ALT_LIO	10C1 15C4 15C8 15D8
AUD_SPDIF_IN	AUD_SPDIF_IN - @alt_lio_lib.ALT_LIO	10C1 14B3
AUD_SPDIF_OUT	AUD_SPDIF_OUT - @alt_lio_lib.ALT_LIO	10D1 14D3
AUD_SPDIF_OUT_R	AUD_SPDIF_OUT_R - @alt_lio_lib.ALT_LIO	10D4
AUD_SPKRAMPL1_IN	AUD_SPKRAMPL1_IN - @alt_lio_lib.ALT_LIO	13C7
AUD_SPKRAMPL2_IN	AUD_SPKRAMPL2_IN - @alt_lio_lib.ALT_LIO	13D7
AUD_SPKRAMPR1_IN	AUD_SPKRAMPR1_IN - @alt_lio_lib.ALT_LIO	13A7
AUD_SPKRAMPR2_IN	AUD_SPKRAMPR2_IN - @alt_lio_lib.ALT_LIO	13B7
AUD_SPKRAMP_SHUTDOWN_L	AUD_SPKRAMP_SHUTDOWN_L - @alt_lio_lib.ALT_LIO	13A8 13B8 13C8 13D8
AUD_VREF_FILT	AUD_VREF_FILT - @alt_lio_lib.ALT_LIO	10C4
AUD_VREF_PORT_B	AUD_VREF_PORT_B - @alt_lio_lib.ALT_LIO	10C1 15A4
AUD_VREF_PORT_C	AUD_VREF_PORT_C - @alt_lio_lib.ALT_LIO	10C1 11B2
BAL_IN_COM	BAL_IN_COM - @alt_lio_lib.ALT_LIO	10C7 15B1
BAL_IN_L	BAL_IN_L - @alt_lio_lib.ALT_LIO	10C7 15B1
BAL_IN_R	BAL_IN_R - @alt_lio_lib.ALT_LIO	10C7 15B1
BEEP	BEEP - @alt_lio_lib.ALT_LIO	10C6
EXCARD_CLKREQ_CONN	EXCARD_CLKREQ_CONN - @alt_lio_lib.ALT_LIO	6B3
EXCARD_CLKREQ_CONN_L	EXCARD_CLKREQ_CONN_L - @alt_lio_lib.ALT_LIO	6A4 6C3
EXCARD_CPPE_L	EXCARD_CPPE_L - @alt_lio_lib.ALT_LIO	6A8 6C3 6C3
EXCARD_CPUSB_L	EXCARD_CPUSB_L - @alt_lio_lib.ALT_LIO	6A8 6C3 6C3
EXCARD_OC_OUT_L	EXCARD_OC_OUT_L - @alt_lio_lib.ALT_LIO	6A6
EXCARD_PRESENT	EXCARD_PRESENT - @alt_lio_lib.ALT_LIO	6A6
EXCARD_RCLKEN	EXCARD_RCLKEN - @alt_lio_lib.ALT_LIO	6B3 6C5
EXCARD_SHDN_L_R	EXCARD_SHDN_L_R - @alt_lio_lib.ALT_LIO	6C6
GND_3V3S3_SGND	GND_3V3S3_SGND - @alt_lio_lib.ALT_LIO	16B7
GND_ADAPTER_UF	GND_ADAPTER_UF - @alt_lio_lib.ALT_LIO	17D7
GND_AUDIO_DGND	GND_AUDIO_DGND - @alt_lio_lib.ALT_LIO	10A6 10A7 10B7 10D7 14A8 14C8
GND_AUDIO_HPAMP_PGND	GND_AUDIO_HPAMP_PGND - @alt_lio_lib.ALT_LIO	12C5
LEFT_ALS_GAIN_SW	LEFT_ALS_GAIN_SW - @alt_lio_lib.ALT_LIO	8C6 9C4
LEFT_ALS_GAIN_SW_R	LEFT_ALS_GAIN_SW_R - @alt_lio_lib.ALT_LIO	9C5
LEFT_ALS_OP_COMP	LEFT_ALS_OP_COMP - @alt_lio_lib.ALT_LIO	9C6
LEFT_ALS_OP_IN	LEFT_ALS_OP_IN - @alt_lio_lib.ALT_LIO	9C5
LEFT_ALS_OUT	LEFT_ALS_OUT - @alt_lio_lib.ALT_LIO	8C6 9C4
LEFT_ALS_OUT_FB	LEFT_ALS_OUT_FB - @alt_lio_lib.ALT_LIO	9C5
LEFT_GAIN_SETTING	LEFT_GAIN_SETTING - @alt_lio_lib.ALT_LIO	9C5
LEFT_PHOTODIODE	LEFT_PHOTODIODE - @alt_lio_lib.ALT_LIO	9C6
LIO_P3V3S0_EN_L	LIO_P3V3S0_EN_L - @alt_lio_lib.ALT_LIO	8C6 16C3
LIO_P3V3S0_EN_R_L	LIO_P3V3S0_EN_R_L - @alt_lio_lib.ALT_LIO	16C2
LIO_PLT_RESET_L	LIO_PLT_RESET_L - @alt_lio_lib.ALT_LIO	4C3 8C6
	PLT_RESET_L - @alt_lio_lib.ALT_LIO	4C4 6C7 7C3
MAX9705L1_NIN	MAX9705L1_NIN - @alt_lio_lib.ALT_LIO	13C6
MAX9705L1_PIN	MAX9705L1_PIN - @alt_lio_lib.ALT_LIO	13C6
MAX9705L2_NIN	MAX9705L2_NIN - @alt_lio_lib.ALT_LIO	13D6
MAX9705L2_PIN	MAX9705L2_PIN - @alt_lio_lib.ALT_LIO	13D6
MAX9705R1_NIN	MAX9705R1_NIN - @alt_lio_lib.ALT_LIO	13A6
MAX9705R1_PIN	MAX9705R1_PIN - @alt_lio_lib.ALT_LIO	13A6
MAX9705R2_NIN	MAX9705R2_NIN - @alt_lio_lib.ALT_LIO	13B6
MAX9705R2_PIN	MAX9705R2_PIN - @alt_lio_lib.ALT_LIO	13B6
MAX9722_C1N	MAX9722_C1N - @alt_lio_lib.ALT_LIO	12C4
MAX9722_C1P	MAX9722_C1P - @alt_lio_lib.ALT_LIO	12C4
MAX9722_PVSS	MAX9722_PVSS - @alt_lio_lib.ALT_LIO	12C4
MIC_HI	MIC_HI - @alt_lio_lib.ALT_LIO	14D3 15A6
MIC_IN	MIC_IN - @alt_lio_lib.ALT_LIO	15A5
MIC_LO	MIC_LO - @alt_lio_lib.ALT_LIO	14D3 15A6

MIC_SHIELD	MIC_SHIELD - @alt_lio_lib.ALT_LIO	14D3 15A6
NC_AUD_GPIO_2	NC_AUD_GPIO_2 - @alt_lio_lib.ALT_LIO	10C7
NC_LED_WLAN_L	NC_LED_WLAN_L - @alt_lio_lib.ALT_LIO	7B3
NC_LED_WPAN_L	NC_LED_WPAN_L - @alt_lio_lib.ALT_LIO	7B3
NC_LED_WWAN_L	NC_LED_WWAN_L - @alt_lio_lib.ALT_LIO	7B3
NC_LIO_P3V3S3_PGOOD	NC_LIO_P3V3S3_PGOOD - @alt_lio_lib.ALT_LIO	16B8
NC_UIM_CLK	NC_UIM_CLK - @alt_lio_lib.ALT_LIO	7C3
NC_UIM_DATA	NC_UIM_DATA - @alt_lio_lib.ALT_LIO	7C3
NC_UIM_PWR	NC_UIM_PWR - @alt_lio_lib.ALT_LIO	7C3
NC_UIM_RESET	NC_UIM_RESET - @alt_lio_lib.ALT_LIO	7C3
NC_UIM_VPP	NC_UIM_VPP - @alt_lio_lib.ALT_LIO	7C3
NC_VOL_DOWN	NC_VOL_DOWN - @alt_lio_lib.ALT_LIO	10C7
NC_VOL_UP	NC_VOL_UP - @alt_lio_lib.ALT_LIO	10C7
NC_W_DISABLE_L	NC_W_DISABLE_L - @alt_lio_lib.ALT_LIO	7C3
ONEWIRE_DCIN_DIV	ONEWIRE_DCIN_DIV - @alt_lio_lib.ALT_LIO	17C5
ONEWIRE_EN	ONEWIRE_EN - @alt_lio_lib.ALT_LIO	17D3
ONEWIRE_ESD	ONEWIRE_ESD - @alt_lio_lib.ALT_LIO	17C4
ONEWIRE_OVERVOLT	ONEWIRE_OVERVOLT - @alt_lio_lib.ALT_LIO	17C4
ONEWIRE_PWR_EN_L	ONEWIRE_PWR_EN_L - @alt_lio_lib.ALT_LIO	17C2
ONEWIRE_PWR_EN_L_DIV	ONEWIRE_PWR_EN_L_DIV - @alt_lio_lib.ALT_LIO	17D2
P2V5_ONEWIRE_REF	P2V5_ONEWIRE_REF - @alt_lio_lib.ALT_LIO	17C5
PCIE_CLK100M_EXCARD_UF_N	PCIE_CLK100M_EXCARD_UF_N - @alt_lio_lib.ALT_LIO	8C4
PCIE_CLK100M_EXCARD_UF_P	PCIE_CLK100M_EXCARD_UF_P - @alt_lio_lib.ALT_LIO	8B4
PCIE_CLK100M_MINI_UF_N	PCIE_CLK100M_MINI_UF_N - @alt_lio_lib.ALT_LIO	8C4
PCIE_CLK100M_MINI_UF_P	PCIE_CLK100M_MINI_UF_P - @alt_lio_lib.ALT_LIO	8C4
PCIE_WAKE_EXCARD_L	PCIE_WAKE_EXCARD_L - @alt_lio_lib.ALT_LIO	4C3 6C3
	PCIE_WAKE_L - @alt_lio_lib.ALT_LIO	4C4 8C6
	PCIE_WAKE_MINI_L - @alt_lio_lib.ALT_LIO	4C3 7C6
	PCIE_WAKE_L - @alt_lio_lib.ALT_LIO	4C4 8C6
PLT_RESET_SWITCH_L	PLT_RESET_SWITCH_L - @alt_lio_lib.ALT_LIO	6C3 6C3
PP1V5_S0_EXCARD_SWITCH	PP1V5_S0_EXCARD_SWITCH - @alt_lio_lib.ALT_LIO	6C3 6C3
PP3V3_AUDIO_CODEC	PP3V3_AUDIO_CODEC - @alt_lio_lib.ALT_LIO	10D6
PP3V3_S0_AUDIO_F	PP3V3_S0_AUDIO_F - @alt_lio_lib.ALT_LIO	15B4 15C8 15C8 15D8
PP3V3_S0_EXCARD_SWITCH	PP3V3_S0_EXCARD_SWITCH - @alt_lio_lib.ALT_LIO	6C3 6C3
PP3V3_S3_EXCARD_SWITCH	PP3V3_S3_EXCARD_SWITCH - @alt_lio_lib.ALT_LIO	6C3 6C3
PP4V5_AUDIO_ANALOG	PP4V5_AUDIO_ANALOG - @alt_lio_lib.ALT_LIO	10A2 10D2 11C7 15A8 15C5
PP4V5_AUDIO_ANALOG_F	PP4V5_AUDIO_ANALOG_F - @alt_lio_lib.ALT_LIO	10D5
PP4V5_AUDIO_ANALOG_F1	PP4V5_AUDIO_ANALOG_F1 - @alt_lio_lib.ALT_LIO	10D5
PP5V_AUDIO_HPAMP_AVDD_F	PP5V_AUDIO_HPAMP_AVDD_F - @alt_lio_lib.ALT_LIO	12D4
PP5V_AUDIO_HPAMP_PVDD_F	PP5V_AUDIO_HPAMP_PVDD_F - @alt_lio_lib.ALT_LIO	12D5
PP5V_PWRON_USB_LEFT2_EMI	PP5V_PWRON_USB_LEFT2_EMI - @alt_lio_lib.ALT_LIO	5D4
PP5V_PWRON_USB_LEFT_EMI	PP5V_PWRON_USB_LEFT_EMI - @alt_lio_lib.ALT_LIO	5B4
PP5V_S0_AUDIO_F	PP5V_S0_AUDIO_F - @alt_lio_lib.ALT_LIO	13A8 13B1 13B8 13C8 13D8
PP5V_S3_3V3S3_R	PP5V_S3_3V3S3_R - @alt_lio_lib.ALT_LIO	16C6
PP5V_S3_3V3S3_VCC	PP5V_S3_3V3S3_VCC - @alt_lio_lib.ALT_LIO	16C7
PP5V_S3_USB_SWITCH_OUT1	PP5V_S3_USB_SWITCH_OUT1 - @alt_lio_lib.ALT_LIO	5B5
PP5V_S3_USB_SWITCH_OUT2	PP5V_S3_USB_SWITCH_OUT2 - @alt_lio_lib.ALT_LIO	5D5
PP18V5_DCIN	PP18V5_DCIN - @alt_lio_lib.ALT_LIO	17D1 18C4
PP18V5_DCIN_FUSE	PP18V5_DCIN_FUSE - @alt_lio_lib.ALT_LIO	17D6
PP18V5_DCIN_ONEWIRE	PP18V5_DCIN_ONEWIRE - @alt_lio_lib.ALT_LIO	17D5
PP18V5_DCIN_UF	PP18V5_DCIN_UF - @alt_lio_lib.ALT_LIO	17D7
SDATAIN	SDATAIN - @alt_lio_lib.ALT_LIO	10C6
SMC_BC_ACOK	SMC_BC_ACOK - @alt_lio_lib.ALT_LIO	8C6 17C1
SMC_EXCARD_CP	SMC_EXCARD_CP - @alt_lio_lib.ALT_LIO	6A4 8C6
SMC_EXCARD_PWR_EN	SMC_EXCARD_PWR_EN - @alt_lio_lib.ALT_LIO	6C7 8C6
SPKRAMP_L1_N_OUT	SPKRAMP_L1_N_OUT - @alt_lio_lib.ALT_LIO	13C4 13C5
SPKRAMP_L1_P_OUT	SPKRAMP_L1_P_OUT - @alt_lio_lib.ALT_LIO	13C4 13C5
SPKRAMP_L2_N_OUT	SPKRAMP_L2_N_OUT - @alt_lio_lib.ALT_LIO	13D4 13D5
SPKRAMP_L2_P_OUT	SPKRAMP_L2_P_OUT - @alt_lio_lib.ALT_LIO	13D4 13D5
SPKRAMP_R1_N_OUT	SPKRAMP_R1_N_OUT - @alt_lio_lib.ALT_LIO	13A4 13A5
SPKRAMP_R1_P_OUT	SPKRAMP_R1_P_OUT - @alt_lio_lib.ALT_LIO	13A4 13A5
SPKRAMP_R2_N_OUT	SPKRAMP_R2_N_OUT - @alt_lio_lib.ALT_LIO	13B4 13B5
SPKRAMP_R2_P_OUT	SPKRAMP_R2_P_OUT - @alt_lio_lib.ALT_LIO	13B4 13B5
SPKRAMP_SYNC1	SPKRAMP_SYNC1 - @alt_lio_lib.ALT_LIO	13C5 13D5
SPKRAMP_SYNC2	SPKRAMP_SYNC2 - @alt_lio_lib.ALT_LIO	13B5 13C5
SPKRAMP_SYNC3	SPKRAMP_SYNC3 - @alt_lio_lib.ALT_LIO	13A5 13B5
SPKRAMP_THERMPAD	SPKRAMP_THERMPAD - @alt_lio_lib.ALT_LIO	13A5 13B5 13B5 13C5 13C5
SPKRCONN_L1_N_OUT	SPKRCONN_L1_N_OUT - @alt_lio_lib.ALT_LIO	13C3 14C3
SPKRCONN_L1_P_OUT	SPKRCONN_L1_P_OUT - @alt_lio_lib.ALT_LIO	13C3 14C3
SPKRCONN_L2_N_OUT	SPKRCONN_L2_N_OUT - @alt_lio_lib.ALT_LIO	13D3 14C3
SPKRCONN_L2_P_OUT	SPKRCONN_L2_P_OUT - @alt_lio_lib.ALT_LIO	13D3 14C3
SPKRCONN_R1_N_OUT	SPKRCONN_R1_N_OUT - @alt_lio_lib.ALT_LIO	13A3 14C3
SPKRCONN_R1_P_OUT	SPKRCONN_R1_P_OUT - @alt_lio_lib.ALT_LIO	13A3 14C3
SPKRCONN_R2_N_OUT	SPKRCONN_R2_N_OUT - @alt_lio_lib.ALT_LIO	13B3 14C3
SPKRCONN_R2_P_OUT	SPKRCONN_R2_P_OUT - @alt_lio_lib.ALT_LIO	13B3 14C3
SPKR_SHIELD	SPKR_SHIELD - @alt_lio_lib.ALT_LIO	14C2
SYS_ONEWIRE	SYS_ONEWIRE - @alt_lio_lib.ALT_LIO	8C6 17C1
SYS_ONEWIRE_BILAT	SYS_ONEWIRE_BILAT - @alt_lio_lib.ALT_LIO	17C2
TP_EXCARD_STBY_L	TP_EXCARD_STBY_L - @alt_lio_lib.ALT_LIO	6C7
TP_USB2_MINI_N	TP_USB2_MINI_N - @alt_lio_lib.ALT_LIO	4B2
	USB2_MINI_N - @alt_lio_lib.ALT_LIO	4B5 7B3
TP_USB2_MINI_P	TP_USB2_MINI_P - @alt_lio_lib.ALT_LIO	4B2
	USB2_MINI_P - @alt_lio_lib.ALT_LIO	4B5 7B3
USB_LEFT2_EMI_N	USB_LEFT2_EMI_N - @alt_lio_lib.ALT_LIO	5C4
USB_LEFT2_EMI_P	USB_LEFT2_EMI_P - @alt_lio_lib.ALT_LIO	5C4
USB_LEFT2_GND	USB_LEFT2_GND - @alt_lio_lib.ALT_LIO	5C3
USB_LEFT_EMI_N	USB_LEFT_EMI_N - @alt_lio_lib.ALT_LIO	5B4
USB_LEFT_EMI_P	USB_LEFT_EMI_P - @alt_lio_lib.ALT_LIO	5B4
USB_LEFT_GND	USB_LEFT_GND - @alt_lio_lib.ALT_LIO	5B3
USB_LEFT_PWRON_L	USB_LEFT_PWRON_L - @alt_lio_lib.ALT_LIO	5D7
VREG_FB	VREG_FB - @alt_lio_lib.ALT_LIO	10A3

Title: Cref Part Report
Design: alt_lio
Date: Jan 19 16:34:21 2006

C5100	CAP_603	alt_lio[5B7]
C5101	CAP_402	alt_lio[5B7]
C5102	CAP_603	alt_lio[5B6]
C5103	CAP_P_CASE-C2-SM	alt_lio[5B5]
C5112	CAP_603	alt_lio[5C6]
C5113	CAP_P_CASE-C2-SM	alt_lio[5C5]
C5150	CAP_603	alt_lio[5B3]
C5151	CAP_603	alt_lio[5A3]
C5160	CAP_603	alt_lio[5D3]
C5161	CAP_603	alt_lio[5C3]
C5300	CAP_402	alt_lio[6C4]
C5301	CAP_402	alt_lio[6C4]
C5302	CAP_402	alt_lio[6C4]
C5303	CAP_603	alt_lio[6C4]
C5304	CAP_603	alt_lio[6C4]
C5305	CAP_603	alt_lio[6C4]
C5330	CAP_402	alt_lio[6C8]
C5331	CAP_603	alt_lio[6C7]
C5334	CAP_402	alt_lio[6C8]
C5335	CAP_603	alt_lio[6C7]
C5350	CAP_402	alt_lio[6A7]
C5351	CAP_402	alt_lio[6A5]
C5360	CAP_402	alt_lio[6A3]
C5400	CAP_402	alt_lio[7C3]
C5401	CAP_603	alt_lio[7C3]
C5410	CAP_402	alt_lio[7C3]
C5411	CAP_603	alt_lio[7C3]
C5420	CAP_402	alt_lio[7C3]
C5421	CAP_603	alt_lio[7C3]
C6401	CAP_402	alt_lio[9C6]
C6402	CAP_402	alt_lio[9C5]
C6403	CAP_402	alt_lio[9D5]
C6404	CAP_402	alt_lio[9B5]
C6800	CAP_603	alt_lio[10D6]
C6801	CAP_402	alt_lio[10D6]
C6802	CAP_603	alt_lio[10D4]
C6803	CAP_P_B2	alt_lio[10A3]
C6804	CAP_P_SMA-LF	alt_lio[10B4]
C6805	CAP_603	alt_lio[10B4]
C6806	CAP_603	alt_lio[10B3]
C6807	CAP_P_SMA-LF	alt_lio[10B3]
C6809	CAP_P_SMA-LF	alt_lio[10B2]
C6810	CAP_P_SMA-LF	alt_lio[10B2]
C6812	CAP_402	alt_lio[10B4]
C6813	CAP_402	alt_lio[10B3]
C6821	CAP_402	alt_lio[10C6]
C6822	CAP_603	alt_lio[10A4]
C6823	CAP_402	alt_lio[10A4]
C6825	CAP_402	alt_lio[10A3]
C6826	CAP_603	alt_lio[10D3]
C6830	CAP_402	alt_lio[10D4]
C6832	CAP_402	alt_lio[10B2]
C6833	CAP_402	alt_lio[10B2]
C6835	CAP_402	alt_lio[10D6]
C6836	CAP_402	alt_lio[10D3]
C7000	CAP_402	alt_lio[11C4]
C7010	CAP_805-1	alt_lio[11C5]
C7011	CAP_805-1	alt_lio[11C5]
C7012	CAP_805-1	alt_lio[11B5]
C7013	CAP_805-1	alt_lio[11B5]
C7014	CAP_805-1	alt_lio[11C3]
C7015	CAP_805-1	alt_lio[11B3]
C7100	CAP_402	alt_lio[12D5]
C7101	CAP_603	alt_lio[12D5]
C7102	CAP_P_B2	alt_lio[12D3]
C7104	CAP_402	alt_lio[12D4]
C7105	CAP_402	alt_lio[12D4]
C7110	CAP_603	alt_lio[12C4]
C7111	CAP_603	alt_lio[12C3]
C7112	CAP_402	alt_lio[12C4]
C7114	CAP_P_B2	alt_lio[12C3]
C7120	CAP_P_SMA-LF	alt_lio[12B6]
C7121	CAP_402	alt_lio[12B4]
C7122	CAP_0603	alt_lio[12B4]
C7130	CAP_P_SMA-LF	alt_lio[12A6]
C7131	CAP_402	alt_lio[12A4]
C7132	CAP_0603	alt_lio[12A4]
C7200	CAP_603	alt_lio[13B1]
C7201	CAP_P_CASE-C2-SM	alt_lio[13C2]
C7202	CAP_P_CASE-C2-SM	alt_lio[13C2]
C7203	CAP_P_CASE-C2-SM	alt_lio[13C1]
C7204	CAP_P_CASE-C2-SM	alt_lio[13C1]
C7210	CAP_402	alt_lio[13D7]
C7211	CAP_402	alt_lio[13D6]
C7212	CAP_603	alt_lio[13D5]
C7213	CAP_P_B2	alt_lio[13D5]
C7214	CAP_402	alt_lio[13D6]
C7220	CAP_402	alt_lio[13C7]
C7221	CAP_402	alt_lio[13C6]
C7222	CAP_603	alt_lio[13C5]
C7223	CAP_P_B2	alt_lio[13C5]
C7224	CAP_402	alt_lio[13C6]
C7230	CAP_402	alt_lio[13B7]
C7231	CAP_402	alt_lio[13B6]
C7232	CAP_603	alt_lio[13B5]
C7233	CAP_P_B2	alt_lio[13B5]
C7234	CAP_402	alt_lio[13B6]
C7240	CAP_402	alt_lio[13A7]
C7241	CAP_402	alt_lio[13A6]
C7242	CAP_603	alt_lio[13A5]
C7243	CAP_P_B2	alt_lio[13A5]
C7244	CAP_402	alt_lio[13A6]
C7260	CAP_402	alt_lio[13D3]
C7261	CAP_402	alt_lio[13D3]
C7270	CAP_402	alt_lio[13C3]
C7271	CAP_402	alt_lio[13C3]
C7280	CAP_402	alt_lio[13B3]
C7281	CAP_402	alt_lio[13B3]
C7290	CAP_402	alt_lio[13A3]
C7291	CAP_402	alt_lio[13A3]
C7300	CAP_402	alt_lio[14C7]
C7301	CAP_402	alt_lio[14C5]
C7302	CAP_402	alt_lio[14C5]
C7303	CAP_402	alt_lio[14C5]
C7304	CAP_402	alt_lio[14C5]
C7305	CAP_402	alt_lio[14C5]
C7350	CAP_402	alt_lio[14A7]
C7351	CAP_603	alt_lio[14A7]
C7352	CAP_402	alt_lio[14A5]
C7353	CAP_402	alt_lio[14A5]
C7354	CAP_402	alt_lio[14A5]
C7355	CAP_402	alt_lio[14A5]
C7356	CAP_402	alt_lio[14A5]
C7400	CAP_402	alt_lio[15B4]
C7401	CAP_402	alt_lio[15D7]
C7402	CAP_402	alt_lio[15C7]
C7404	CAP_402	alt_lio[15C4]
C7411	CAP_402	alt_lio[15B7]
C7412	CAP_402	alt_lio[15B6]
C7414	CAP_402	alt_lio[15C4]
C7442	CAP_402	alt_lio[15A3]
C7443	CAP_402	alt_lio[15A2]
C7445	CAP_402	alt_lio[15A2]
C7446	CAP_402	alt_lio[15A1]
C7447	CAP_402	alt_lio[15A1]
C7450	CAP_402	alt_lio[15A4]
C7451	CAP_402	alt_lio[15A5]
C7800	CAP_603	alt_lio[16C6]
C7801	CAP_603	alt_lio[16C6]
C7802	CAP_603	alt_lio[16C6]
C7806	CAP_402	alt_lio[16B8]
C7807	CAP_402	alt_lio[16B6]
C7808	CAP_402	alt_lio[16B7]
C7809	CAP_402	alt_lio[16C4]
C7822	CAP_402	alt_lio[16B4]
C7830	CAP_1210	alt_lio[16C3]
C7840	CAP_805	alt_lio[16B2]
C7841	CAP_P_SMC-LF	alt_lio[16B2]
C7842	CAP_805	alt_lio[16B2]
C7843	CAP_402	alt_lio[16B2]
C7890	CAP_402	alt_lio[16C1]
C8200	CAP_805	alt_lio[17D7]
C8201	CAP_805	alt_lio[17D7]
C8203	CAP_402	alt_lio[17D7]
C8204	CAP_603	alt_lio[17D6]
C8205	CAP_603	alt_lio[17D4]
C8206	CAP_402	alt_lio[17C2]
D5100	DIODE_SCHOT_3P_A_SC-75	alt_lio[5A3]
D5110	DIODE_SCHOT_3P_A_SC-75	alt_lio[5C4]
D6800	DIODE_SCHOT_POWERDI-123	alt_lio[10B4]
D7800	DIO_MBRM140T3_SM_SMD	alt_lio[16B3]
D8200	DIODE_SCHOT_3P_A_SC-75	alt_lio[17C7]
DZ7300	SUPPR_TRANSIENT_4P1_0405	alt_lio[14C6]
DZ7301	SUPPR_TRANSIENT_4P1_0405	alt_lio[14C6]
DZ7350	SUPPR_TRANSIENT_4P1_0405	alt_lio[14A6]
DZ7351	SUPPR_TRANSIENT_4P1_0405	alt_lio[14A6]
F8200	FUSE_1206	alt_lio[17D5]
FL5500	FILTER_4P_TCM1005	alt_lio[8C3]
FL5501	FILTER_4P_TCM1005	alt_lio[8B3]
J5100	CON_F4RT_USB_S2MT_TH_F-RT-TH-USB-LFT	alt_lio[5B2]
J5110	CON_F4RT_USB_S2MT_TH_F-RT-TH-USB-LFT	alt_lio[5C2]
J5300	CON_F26RT_S2MT_SM_F-RT-SM	alt_lio[6D2]
J5400	CON_F52RT_D2MT_SM_F-ST-SM	alt_lio[7C5]
J5500	CON_F80ST_D4MT_SM_F-ST-SM	alt_lio[8C4]
J7300	CON_F8RT_SPDIFTRAN_TH2_F-RT-TH	alt_lio[14D8]
J7350	CON_F8RT_SPDIFRCVR_TH2_F-RT-TH	alt_lio[14B8]
J7380	CON_M3ST_S_TH_M-ST-TH	alt_lio[14D1]
J7381	CON_M5ST_S_TH_M-ST-TH	alt_lio[14C1]
J7382	CON_M5ST_S_TH_M-ST-TH	alt_lio[14C1]
J8200	CON_F5RT_S2MT_TH3_F-RT-TH	alt_lio[17D8]
J8215	CON_M8RT_S_SM_M-RT-SM	alt_lio[18C5]
L5100	FILTER_4P_SM	alt_lio[5B4]
L5101	IND_SM	alt_lio[5B4]
L5110	FILTER_4P_SM	alt_lio[5C4]
L5111	IND_SM	alt_lio[5D4]
L5150	IND_SM	alt_lio[5A4]
L5160	IND_SM	alt_lio[5C4]
L6800	IND_0402	alt_lio[10A5]
L6801	IND_0402	alt_lio[10D6]
L6802	IND_0402	alt_lio[10D4]
L6803	IND_0402	alt_lio[10D3]
L7101	IND_0402	alt_lio[12D6]
L7102	IND_0402	alt_lio[12C6]
L7200	IND_0402	alt_lio[13B2]
L7201	IND_0402	alt_lio[13D7]
L7210	IND_0402	alt_lio[13D7]
L7220	IND_0402	alt_lio[13C7]
L7230	IND_0402	alt_lio[13B7]
L7240	IND_0402	alt_lio[13A7]
L7300	IND_0603	alt_lio[14D6]
L7301	IND_0603	alt_lio[14D4]
L7302	IND_0402	alt_lio[14D6]
L7303	IND_0402	alt_lio[14C6]
L7304	IND_0402	alt_lio[14C4]
L7305	IND_0402	alt_lio[14C6]
L7306	IND_0402	alt_lio[14C4]
L7307	IND_0402	alt_lio[14C6]
L7350	IND_0402	alt_lio[14B6]
L7351	IND_0402	alt_lio[14B4]
L7352	IND_0402	alt_lio[14B6]
L7353	IND_0402	alt_lio[14B6]
L7354	IND_0402	alt_lio[14B4]
L7355	IND_0402	alt_lio[14B6]
L7356	IND_0402	alt_lio[14B4]
L7357	IND_0402	alt_lio[14A6]
L7400	IND_0402	alt_lio[15B4]
L7800	IND_IHLP	alt_lio[16B3]
L8200	FILTER_4P_SM	alt_lio[17D6]
L8201	IND_SM-1	alt_lio[17D6]
PD6401	PHOTODIODE_2P_TH	alt_lio[9C6]
Q5101	TRA_2N7002_SOT23-LF	alt_lio[5C7]
Q5360	TRA_2N7002_SOT23-LF	alt_lio[6B3]
Q6401	TRA_2N7002_SOT23-LF	alt_lio[9C5]
Q7400	TRA_2N7002DW_SOT-363	alt_lio[15D7 15C7]
Q7401	TRA_2N7002DW_SOT-363	alt_lio[15D6 15D5]
Q7402	TRA_2N7002DW_SOT-363	alt_lio[15B7 15C5]
Q7403	TRA_2N7002DW_SOT-363	alt_lio[15A8 15A7]
Q7800	TRA_FDM6296_MICROFET3X3	alt_lio[16C4]
Q7801	TRA_FDM6296_MICROFET3X3	alt_lio[16B4]
Q7890	TRA_FDC638P_SM-LF	alt_lio[16C2]
Q8200	TRA_2N7002DW_SOT-363	alt_lio[17C3 17C1]
Q8201	TRA_2N7002DW_SOT-363	alt_lio[17C1 17C2]
Q8209	TRA_TP0610_SOT23-3	alt_lio[17D2]
R0600	RES_402	alt_lio[4A4]
R0601	RES_402	alt_lio[4A3]
R5101	RES_402	alt_lio[5D7]
R5102	RES_402	alt_lio[5C7]
R5300	RES_402	alt_lio[6C6]
R5301	RES_402	alt_lio[6C6]
R5352	RES_402	alt_lio[6A6]
R5353	RES_402	alt_lio[6B5]
R5354	RES_402	alt_lio[6B5]
R5360	RES_402	alt_lio[6B3]
R5361	RES_402	alt_lio[6B3]
R5500	RES_402	alt_lio[8B4]
R6401	RES_402	alt_lio[9C6]
R6402	RES_402	alt_lio[9C6]
R6403	RES_402	alt_lio[9C5]
R6404	RES_402	alt_lio[9C5]
R6405	RES_402	alt_lio[9C5]
R6406	RES_402	alt_lio[9C4]
R6407	RES_402	alt_lio[9C4]
R6800	RES_402	alt_lio[10C6]
R6802	RES_402	alt_lio[10A5]
R6803	RES_402	alt_lio[10A5]
R6807	RES_402	alt_lio[10C7]
R6808	RES_402	alt_lio[10D3]
R6810	RES_402	alt_lio[10A3]
R6811	RES_402	alt_lio[10A3]
R6852	RES_402	alt_lio[10B8]
R6853	RES_402	alt_lio[10B8]
R7000	RES_402	alt_lio[11B3]
R7001	RES_402	alt_lio[11B6]
R7002	RES_402	alt_lio[11C5]
R7003	RES_402	alt_lio[11B5]
R7010	RES_402	alt_lio[11C4]
R7011	RES_402	alt_lio[11C4]
R7012	RES_402	alt_lio[11C4]
R7013	RES_402	alt_lio[11C4]
R7014	RES_402	alt_lio[11B4]
R7015	RES_402	alt_lio[11B4]
R7016	RES_402	alt_lio[11B4]
R7017	RES_402	alt_lio[11B4]
R7100	RES_402	alt_lio[12C5]
R7101	RES_603	alt_lio[12D4]
R7110	RES_402	alt_lio[12C3]
R7111	RES_402	alt_lio[12C3]
R7112	RES_603	alt_lio[12D3]
R7113	RES_603	alt_lio[12C2]
R7120	RES_402	alt_lio[12B5]
R7121	RES_402	alt_lio[12B4]
R7122	RES_402	alt_lio[12B4]
R7123	RES_402	alt_lio[12B4]
R7124	RES_402	alt_lio[12B4]
R7130	RES_402	alt_lio[12A5]
R7131	RES_402	alt_lio[12A4]
R7132	RES_402	alt_lio[12A4]
R7133	RES_402	alt_lio[12A4]
R7134	RES_402	alt_lio[12A4]
R7201	RES_402	alt_lio[13D6]
R7202	RES_402	alt_lio[13D5]
R7203	RES_402	alt_lio[13C5]
R7204	RES_402	alt_lio[13B5]
R7260	RES_402	alt_lio[13D4]
R7261	RES_402	alt_lio[13D4]
R7270	RES_402	alt_lio[13C4]
R7271	RES_402	alt_lio[13C4]
R7280	RES_402	alt_lio[13B4]
R7281	RES_402	alt_lio[13B4]
R7290	RES_402	alt_lio[13A4]
R7291	RES_402	alt_lio[13A4]
R7300	RES_402	alt_lio[14C4]
R7301	RES_402	alt_lio[14C4]
R7320	RES_402	alt_lio[14D7]
R7321	RES_402	alt_lio[14B7]
R7323	RES_402	alt_lio[14B6]
R7349	RES_402	alt_lio[14B7]
R7350	RES_402	alt_lio[14A4]
R7351	RES_402	alt_lio[14A4]
R7380	RES_402	alt_lio[14C2]
R7381	RES_402	alt_lio[14C1]
R7390	RES_402	alt_lio[14B2]
R7401	RES_402	alt_lio[15D8]
R7402	RES_402	alt_lio[15D7]
R7403	RES_402	alt_lio[15C7]
R7404	RES_402	alt_lio[15C4]
R7405	RES_402	alt_lio[15D5]
R7406	RES_402	alt_lio[15D6]
R7411	RES_402	alt_lio[15C8]
R7412	RES_402	alt_lio[15B7]
R7413	RES_402	alt_lio[15C6]
R7414	RES_402	alt_lio[15C4]
R7415	RES_402	alt_lio[15C5]
R7416	RES_402	alt_lio[15C6]
R7417	RES_402	alt_lio[15A8]
R7418	RES_402	alt_lio[15A7]
R7450	RES_402	alt_lio[15A5]
R7451	RES_402	alt_lio[15A5]
R7452	RES_402	alt_lio[15A5]
R7453	RES_402	alt_lio[15A4]
R7454	RES_402	alt_lio[15A4]
R7460	RES_402	alt_lio[15C7]
R7800	RES_402	alt_lio[16B2]
R7802	RES_402	alt_lio[16C6]
R7804	RES_402	alt_lio[16C7]
R7805	RES_402	alt_lio[16B7]
R7806	RES_402	alt_lio[16B8]
R7808	RES_402	alt_lio[16B7]
R7810	RES_402	alt_lio[16B4]
R7821	RES_402	alt_lio[16B3]
R7822	RES_402	alt_lio[16B3]
R7823	RES_402	alt_lio[16C5]
R7830	RES_402	alt_lio[16C6]
R7890	RES_402	alt_lio[16C2]
R8200	RES_402	alt_lio[17C2]
R8201	RES_402	alt_lio[17D2]
R8202	RES_402	alt_lio[17D5]
R8203	RES_402	alt_lio[17C5]
R8204	RES_402	alt_lio[17C6]
R8205	RES_402	alt_lio[17D3]
R8208	RES_402	alt_lio[17D5]
R8209	RES_402	alt_lio[17D1]
R8210	RES_402	alt_lio[17D1]
R8211	RES_402	alt_lio[17C2]
R8290	RES_402	alt_lio[17C5]
R8291	RES_402	alt_lio[17C4]
U5100	SWI_TPS2042B_MSOP	alt_lio[5B6]
U5300	PWR_CNTRL_TPS2231_QFN	alt_lio[6C5]
U5351	MC74VHC1G00_SC70-5	alt_lio[6A6]
U5352	MC74VHC1G08_SC70	alt_lio[6A5]
U5360	MC74VHC1G00_SC70-5	alt_lio[6B2]
U6401	OPAMP_MAX4236EUTT_SOT23-6-LF	alt_lio[9C5]
U6800	AUDIO_STAC9220_LQFP	alt_lio[10D5]
U7000	OPAMP_MAX4253_UMAX	alt_lio[11B4 11C4]
U7100	MAX9722_QFN	alt_lio[12D4]
U7210	MAX9705_TDFN	alt_lio[13D6]
U7220	MAX9705_TDFN	alt_lio[13C6]
U7230	MAX9705_TDFN	alt_lio[13B6]
U7240	MAX9705_TDFN	alt_lio[13A6]
U7800	ISL6269_QFN	alt_lio[16C6]
U8290	COMPARATOR_LM397_SOT23-5	alt_lio[17C4]
VR6800	LREG_TPS79501_SOT223-6	alt_lio[10A4]
VR8290	SHNTREG_LM431_SOT23-3-LF	alt_lio[17C5]
XW6800	SHORT_SM	alt_lio[10A8]
XW6801	SHORT_SM	alt_lio[10B5]
XW7100	SHORT_SM	alt_lio[12C5]
XW7101	SHORT_SM	alt_lio[12C5]
XW7103	SHORT_SM	alt_lio[12C4]
XW7200	SHORT_SM	alt_lio[13B6]
XW7310	SHORT_SM	alt_lio[14B2]
XW7311	SHORT_SM	alt_lio[14B2]
XW7312	SHORT_SM	alt_lio[14B2]
XW7400	SHORT_SM	alt_lio[15A4]
XW7800	SHORT_SM	alt_lio[16B6]