COMPAL CONFIDENTIAL

MODEL NAME :
FDI40 N3-14", FDI4A V3-14", FDI43 N5-14",
FDI50 N3-15", FDI5A V3-15", FDI53 N5-15",
FDI70 N3-17"

PCB NO : DA8001K6000 (SBDR)
DA8001K6100 (NBDR)

BOM P/N :

SBDR-DIS	NBDR-DIS	X4E
431AJ431L51	431AJ431L01	X4EAJ431L51(N3)
431AJ431L52	431AJ431L02	X4EAJ431L52(V3)
431AJ431L53		X4EAJ431L01(N5)
431AJ431L54		

CML-U+MEC1418
2019-06-20

REV : 1.0 (A00)

PCB R1

zzz
DAZ2QM00100
PCB_SBDR_R1@
PCB FDI40 LA-G716P LS-F112P/F114P/G711P

zzz
DAZ2RF00300
PCB_NBRD_R1@
PCB FDI43 LA-G716P LS-G718P

PCB R3

zzz
DAZ2QM00101
PCB_SBDR_R3_GCE@
PCB FDI40 LA-G716P LS-F112P GOLD A31 !

zzz
DAZ2RF00301
PCB_NBRD_R3_GCE@
PCB FDI43 LA-G716P LS-G718P GOLD A31 !

zzz
DAZ2QM00102
PCB_SBDR_R3_TRI@
PCB FDI40 LA-G716P LS-F112P TRIPOD A31 !

zzz
DAZ2RF00302
PCB_NBRD_R3_TRI@
PCB FDI43 LA-G716P LS-G718P TRIPOD A31 !

zzz
DAZ2QM00103
PCB_SBDR_R3_HAN@
PCB FDI40 LA-G716P LS-F112P HANNS A31 !,

zzz
DAZ2RF00303
PCB_NBRD_R3_HAN@
PCB FDI43 LA-G716P LS-G718P HANNS A31 !

zzz
DAZ2QM00104
PCB_SBDR_R3_TMT@
PCB FDI40 LA-G716P LS-F112P T-MAC A31 !

zzz
DAZ2RF00304
PCB_NBRD_R3_TMT@
PCB FDI43 LA-G716P LS-G718P T-MAC A31 !

@ : Un-pop Component
DIS@ : GPU Support
INSPIRON@/VOSTRO@ : Inspiron/Vostro
CML@/CNL@ : CML/CNL
BASE@/PREM@ : Pentium,Celeron / i3,i5,i7
EXO@/TOPAZ@ : R17M-M1-30/R17M-M2-50
EC@ : EC Support
JP@/PJP@ : JUMP
100@/1000@: Lan

EMI@/ESD@/RF@ : EMI, ESD and RF Component
@EMI@/@ESD@/@RF@ : EMI, ESD and RF Un-POP Component
CMC@ : XDP Component
CONN@ : Connector Component
KBBL@ : KB Backlight
TPM@/FTPM@ : HW TPM/SW TPM
750_CTPM@:750 and china TPM
ST_CTPM@:ST and china TPM
CTPM@:China TPM
FFS@ : Free Fall Sensor
TYPEC@ : TypeC
TYPEC@EMI@/TYPEC@ESD@: EMI, ESD ,TypeC Component
M1_30@/M2_50@ : R17M-M1-30/R17M-M2-50
2G_G5@/2G_H@/2G_S@/2G_M@ : VRAM type
PCB@/PCB_R1@/PCB_R3_G@/PCB_R3_T@/PCB_R3_H@/PCB_R3_TM@: PCB MB

PCB_NBDR_R1@: PCB MB DAZ for NBDR
TS_NON@/TS_USB@/TS_I2C@: Touch Screen Interface Select
SBDR@/NBDR@: SBDR/ NBDR Select

CPU R1

UC1
i3-10110U
SA0000CU31L
CML_2.1G_R1@
S IC FJ8070104307606 SRGL0 V0 2.1G BGA

UC1
i5-10210U
SA0000CST2L
CML_1.6G_R1@
S IC FJ8070104307504 SRGKY V0 1.6G BGA

UC1
i7-10510U
SA0000CU22L
CML_1.8G_R1@
S IC FJ8070104303905 SRGKW V0 1.8G FCBGA

CPU R3

UC1
i3-10110U
SA0000CU32L
CML_2.1G_R3@
S IC FJ8070104307606 SRGL0 V0 2.1G A31!

UC1
i5-10210U
SA0000CST3L
CML_1.6G_R3@
S IC FJ8070104307504 SRGKY V0 1.6G A31!

UC1
i7-10510U
SA0000CU21L
CML_1.8G_R3@
S IC FJ8070104303905 SRGKW V0 1.8G A31!

Layout Dell logo

COPYRIGHT 2014
ALL RIGHT RESERVED
REV: X01
PWB: 9HTP8

Security Classification	Compal Secret Data		
Issued Date	2019/06/20	Deciphered Date	2020/06/30

THIS SHEET OF ENGINEERING DRAWING IS THE PROPRIETARY PROPERTY OF COMPAL ELECTRONICS, INC. AND CONTAINS CONFIDENTIAL AND TRADE SECRET INFORMATION. THIS SHEET MAY NOT BE TRANSFERED FROM THE CUSTODY OF THE COMPETENT DIVISION OF R&D DEPARTMENT EXCEPT AS AUTHORIZED BY COMPAL ELECTRONICS, INC. NEITHER THIS SHEET NOR THE INFORMATION IT CONTAINS MAY BE USED BY OR DISCLOSED TO ANY THIRD PARTY WITHOUT PRIOR WRITTEN CONSENT OF COMPAL ELECTRONICS, INC.

Compal Electronics, Inc.

Title: Cover Page

Size: | Document Number: LA-G716P | Rev: 1.0

Date: Thursday, June 20, 2019 | Sheet 1 of 101

Block Diagram

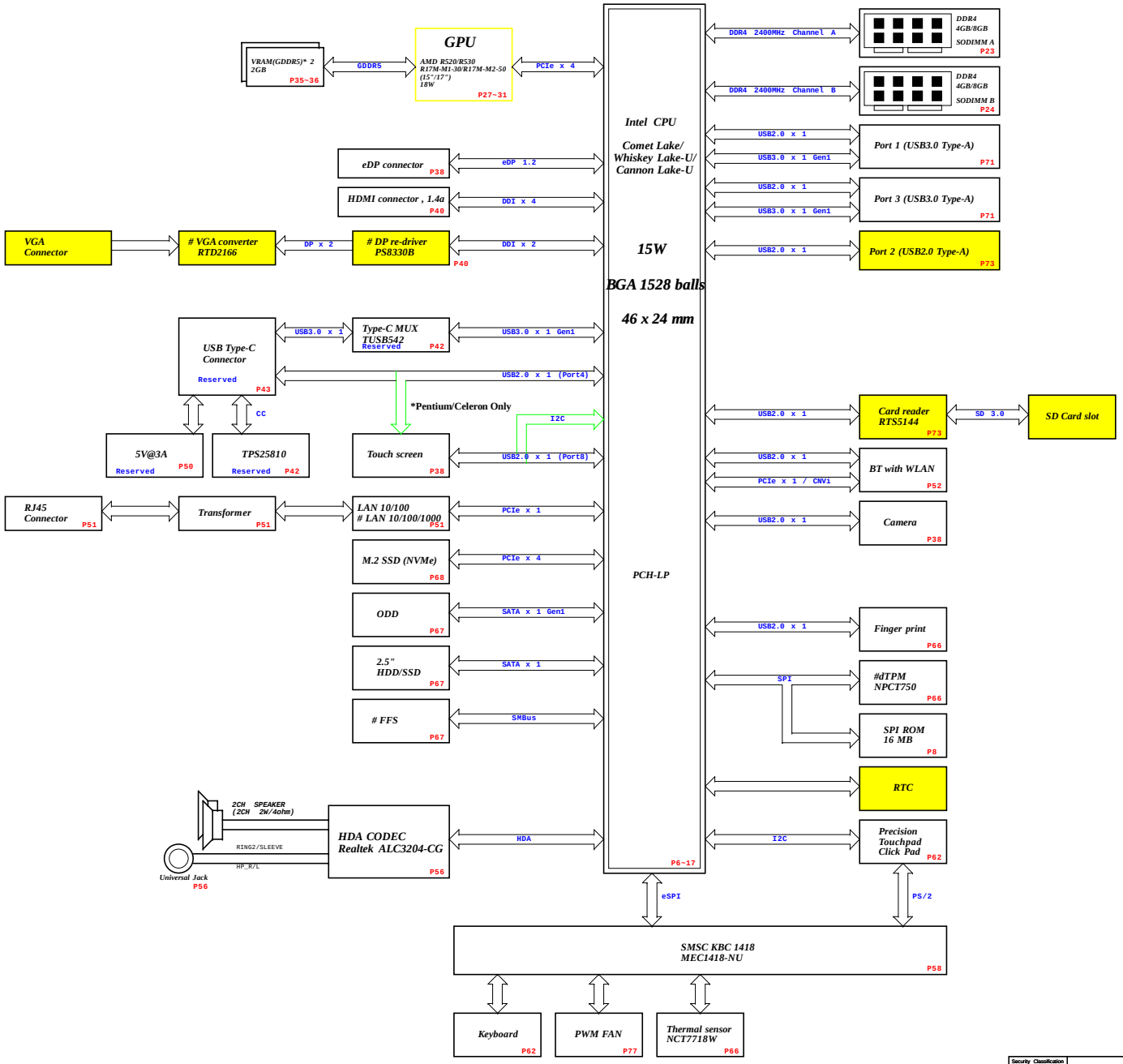

----> V3 only

Battery	RTC
Charger	Daughter board

Security Classification	Compal Secret Data		
Issued Date	2019/06/30	Deciphered Date	2020/06/30

THIS SHEET OF ENGINEERING DRAWING IS THE PROPRIETARY PROPERTY OF COMPAL ELECTRONICS, INC. AND CONTAINS CONFIDENTIAL AND TRADE SECRET INFORMATION. THIS SHEET MAY NOT BE TRANSFERRED FROM THE CUSTODY OF THE COMPETENT DIVISION OF R&D DEPARTMENT EXCEPT AS AUTHORIZED BY COMPAL ELECTRONICS, INC. NEITHER THIS SHEET NOR INFORMATION IT CONTAINS MAY BE USED BY OR DISCLOSED TO ANY THIRD PARTY WITHOUT PRIOR WRITTEN CONSENT OF COMPAL ELECTRONICS, INC.

Compal Electronics, Inc.

Title: Block Diagram

Size	Document Number	Rev
	LA-G716P	1.0

Date: Thursday, June 20, 2019 Sheet 2 of 101

POWER STATES

Signal / State	SLP S3#	SLP S4#	SLP S5#	ALWAYS PLANE	SUS PLANE	RUN PLANE	CLOCKS
S0 (Full ON) / M0	HIGH	HIGH	HIGH	ON	ON	ON	ON
S3 (Suspend to RAM) / M3	LOW	HIGH	HIGH	ON	ON	OFF	OFF
S4 (Suspend to DISK) / M3	LOW	LOW	HIGH	ON	OFF	OFF	OFF
S5 (SOFT OFF) / M3	LOW	LOW	LOW	ON	OFF	OFF	OFF
G3	OFF	OFF	OFF	OFF	OFF	OFF	OFF
DS3	---	---	---	---	---	---	---

USB 2.0	DESTINATION
1	USB2.0 port1
2	USB2.0 Port2
3	USB2.0 Port, IO/B
4*	Touch screen
5	Finger printer
6	Camera
7	Card reader , IO/B
8*	Reserved
9	NA
10	BT

Voltage Rails

Power Plane	Descript i on	S0	S3	S4/S5		
+19V_ADPIN	Adapter power supply	N/A	N/A	N/A		
+17.4V_BATT++	Bat t ery po wer supply	N/A	N/A	N/A		
+19VB	AC or bat t ery po wer rail for Syst e m	N/A	N/A	N/A		
+RTC_CELL	RTC power	ON	ON	ON		
+3VALW_DSW	+3VALW power for PCH DSW rails	ON	ON	ON*		
+5VALW	System +5V always on power rail	ON	ON	ON*		
+3VALW	System +3V always on power rail	ON	ON	ON*		
+1.8V_PRIM	System +1.8V always on power rail	ON	ON	ON*		
+1.0V_PRIM	System +1.0V always on power rail	ON	ON	ON*		
+1.2V_DDR	DDR4 +1.2V power rail	ON	ON	OFF		
+2.5V_MEM	DDR4 +2.5V power rail	ON	ON	OFF		
+0.6V_DDR_VTT	DDR +0.6VS power rail for DDR terminator	ON	OFF	OFF		
+VCCST	+1.05 VCCST power rail	ON	ON	OFF		
+VCCSTG	+1.05 VCCSTG power rail	ON	OFF	OFF		
+VCCIO	+1.05 VCCIO power rail	ON	OFF	OFF		
+VCC_CORE	Core voltage for CPU	ON	OFF	OFF		
+VCC_GT	Sliced graphics power rail	ON	OFF	OFF		
+VCC_SA	System Agent power rail	ON	OFF	OFF		
+3VLP	+19VB to +3VLP power rail for suspend power	ON	ON	ON		
+3VALW_PCH	+3VALW power for PCH suspend rails	ON	ON	ON*		
+5VS	System +5VS power rail	ON	OFF	OFF		
+3VS	System +3VS power rail	ON	OFF	OFF		
+1.35V_MEM_GFX	+1.35V power rail for GPU	ON	OFF	OFF		
+3VGS	+3V power rail for GPU	ON	OFF	OFF		
+1.8VGS	+1.8V power rail for GPU	ON	OFF	OFF		
+0.95VSDGPU	+0.95V power rail for GPU	ON	OFF	OFF		
Note : ON* means that this power plane is ON only with AC power available, otherwise it is OFF						

Board ID & Model ID Table

#	Pull-down	Pull-up	Voltage	Board ID	Model ID
1	100	10.0	3.000	EVT	SBDR-UMA
2	100	17.8	2.801	DVT1	
3	100	27.0	2.598		NBDR-UMA
4	100	37.4	2.402	DVT2	
5	100	49.9	2.201		SBDR-DSC
6	100	64.9	2.001	Pilot	
7	100	82.5	1.808		NBDR-DSC
8	100	107.0	1.594		
9	100	154.0	1.299		
10	100	200.0	1.100		

Figure 6-1. High Speed I/O (HSIO) Lane Multiplexing in CNL PCH-LP

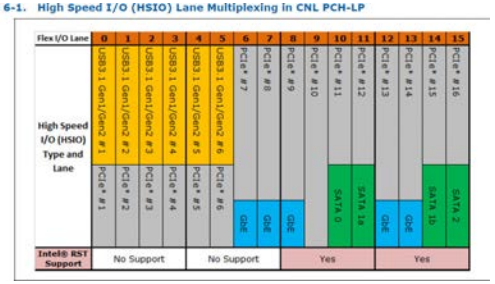

USB3.0	PCIE	SATA	DESTINATION
USB3.0-1	PCIE-1		USB3.0 port1
USB3.0-2	PCIE-2		NA
USB3.0-3	PCIE-3		USB3.0 port2
USB3.0-4	PCIE-4		TypeC
USB3.0-5	PCIE-5		GPU
USB3.0-6	PCIE-6		GPU
	PCIE-7		GPU
	PCIE-8		GPU
	PCIE-9		LOM
	PCIE-10		WLAN
	PCIE-11	SATA-0	SATA HDD
	PCIE-12	SATA-1A	SATA ODD
	PCIE-13		NVME SSD
	PCIE-14		NVME SSD
	PCIE-15	SATA-1B	NVME SSD
	PCIE-16	SATA-2	NVME SSD

Security Classification	Compal Secret Data		Compal Electronics, Inc.
Issued Date	2019/06/20	Deciphered Date 2020/06/30	Title: Notes List
			Size: Document Number: LA-G716P Rev: 1.0
			Date: Thursday, June 30, 2010 Sheet 3 of 101

THIS SHEET OF ENGINEERING DRAWING IS THE PROPRIETARY PROPERTY OF COMPAL ELECTRONICS, INC. AND CONTAINS CONFIDENTIAL AND TRADE SECRET INFORMATION. THIS SHEET MAY NOT BE TRANSFERRED FROM THE CUSTODY OF THE COMPETENT DIVISION OF R&D DEPARTMENT EXCEPT AS AUTHORIZED BY COMPAL ELECTRONICS, INC. NEITHER THIS SHEET NOR THE INFORMATION IT CONTAINS MAY BE USED BY OR DISCLOSED TO ANY THIRD PARTY WITHOUT PRIOR WRITTEN CONSENT OF COMPAL ELECTRONICS, INC.

DELL CONFIDENTIAL/PROPRIETARY

PROPRIETARY NOTE: THIS SHEET OF ENGINEERING DRAWING AND SPECIFICATIONS CONTAINS CONFIDENTIAL TRADE SECRET AND OTHER PROPRIETARY INFORMATION OF DELL INC. ("DELL") THIS DOCUMENT MAY NOT BE TRANSFERRED OR COPIED WITHOUT THE EXPRESS WRITTEN AUTHORIZATION OF DELL. IN ADDITION, NEITHER THIS SHEET NOR THE INFORMATION IT CONTAINS WAY BE USED BY OR DISCLOSED TO ANY THIRD PARTY WITHOUT DELL'S EXPRESS WRITTEN CONSENT.

https://shop62935598.taobao.com

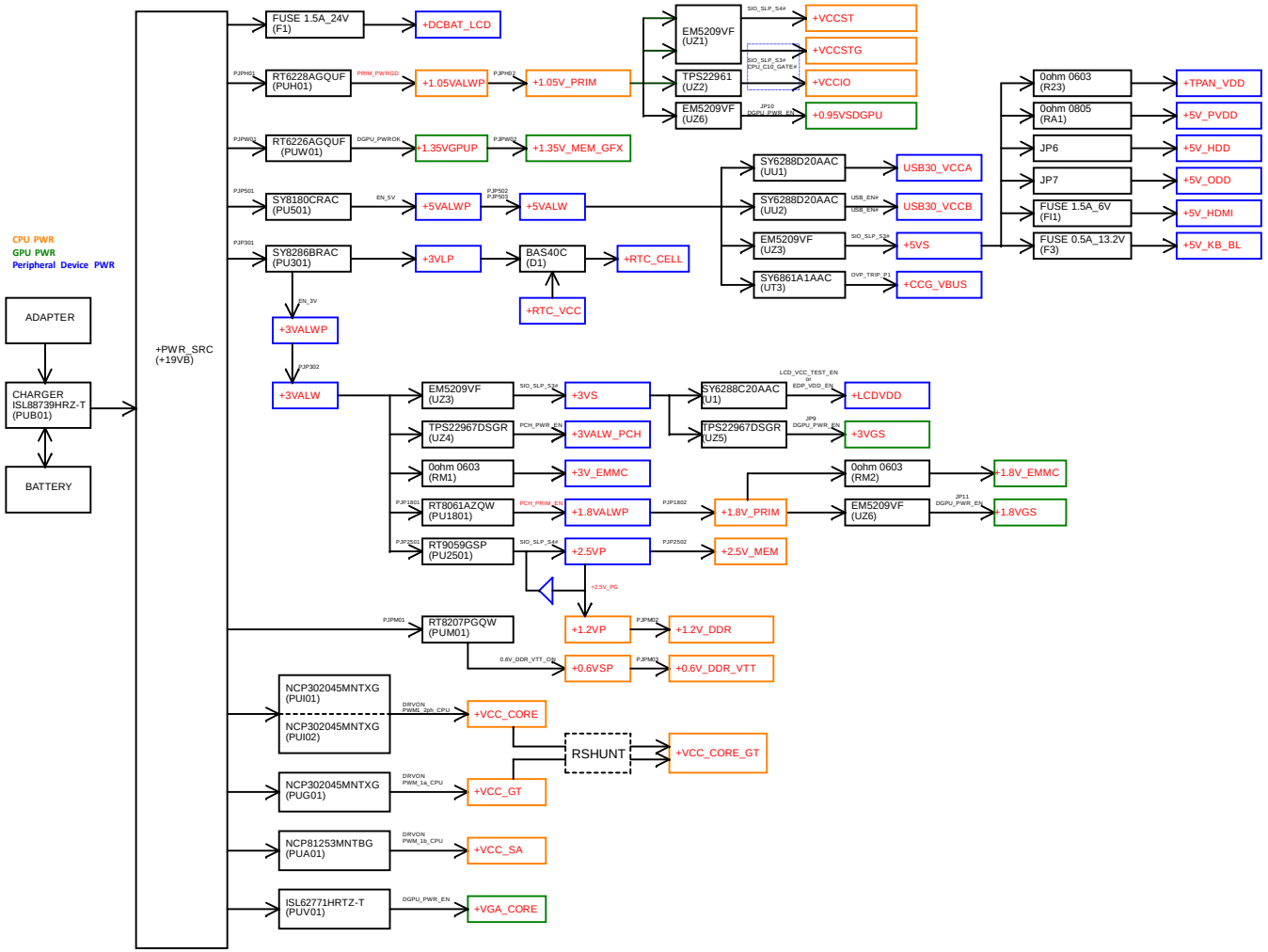

Security Classification	Compal Secret Data			Compal Electronics, Inc.
Issued Date	2019/06/20	Deciphered Date	2020/06/30	Title: Power MAP
				Size / Document Number: LA-G716P / Rev: 1.0
Date: Thursday, June 20, 2019	Sheet 4 of 101			

THIS SHEET OF ENGINEERING DRAWING IS THE PROPRIETARY PROPERTY OF COMPAL ELECTRONICS, INC. AND CONTAINS CONFIDENTIAL AND TRADE SECRET INFORMATION. THIS SHEET MAY NOT BE TRANSFERRED FROM THE CUSTODY OF THE COMPETENT DIVISION OF R&D DEPARTMENT EXCEPT AS AUTHORIZED BY COMPAL ELECTRONICS, INC. NEITHER THIS SHEET NOR THE INFORMATION IT CONTAINS MAY BE USED BY OR DISCLOSED TO ANY THIRD PARTY WITHOUT PRIOR WRITTEN CONSENT OF COMPAL ELECTRONICS, INC.

Timing Diagram for S5 to S0 mode

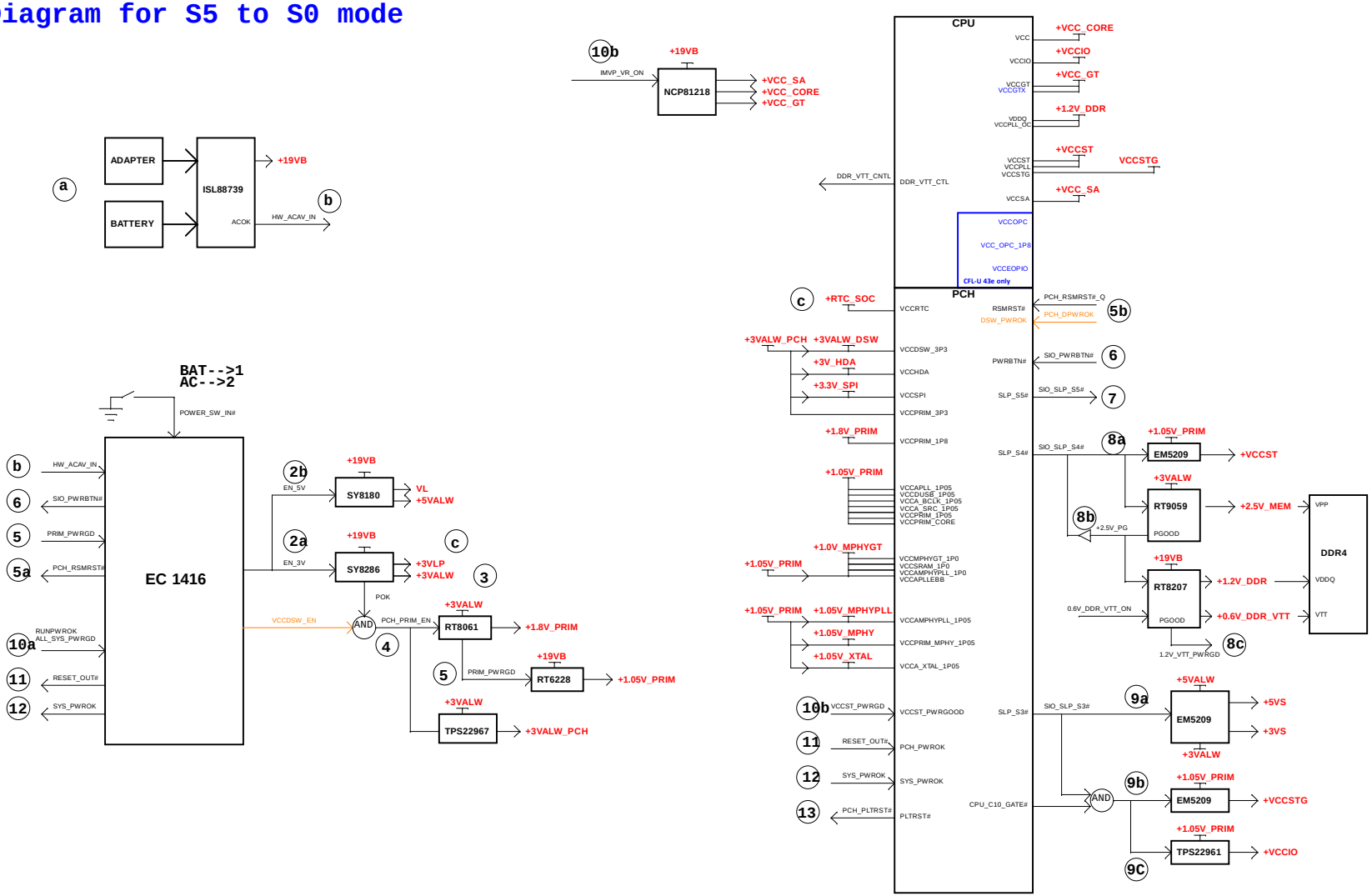

Security Classification	Compal Secret Data		
Issued Date	2019/06/20	Deciphered Date	2020/06/30

THIS SHEET OF ENGINEERING DRAWING IS THE PROPRIETARY PROPERTY OF COMPAL ELECTRONICS, INC. AND CONTAINS CONFIDENTIAL AND TRADE SECRET INFORMATION. THIS SHEET MAY NOT BE TRANSFERRED FROM THE CUSTODY OF THE COMPETENT DIVISION OF R&D DEPARTMENT EXCEPT AS AUTHORIZED BY COMPAL ELECTRONICS, INC. NEITHER THIS SHEET NOR THE INFORMATION IT CONTAINS MAY BE USED BY OR DISCLOSED TO ANY THIRD PARTY WITHOUT PRIOR WRITTEN CONSENT OF COMPAL ELECTRONICS, INC.

Compal Electronics, Inc.

Title: Platform Power Sequence

Size | Document Number: LA-G716P | Rev: 1.0

Date: Thursday, June 20, 2019 | Sheet 5 of 101

PROPRIETARY NOTE: THIS SHEET OF ENGINEERING DRAWING AND SPECIFICATIONS CONTAINS CONFIDENTIAL TRADE SECRET AND OTHER PROPRIETARY INFORMATION OF DELL INC. ("DELL"). THIS DOCUMENT MAY NOT BE TRANSFERRED OR COPIED WITHOUT THE EXPRESS WRITTEN AUTHORIZATION OF DELL. IN ADDITION, NEITHER THIS SHEET NOR THE INFORMATION IT CONTAINS MAY BE USED BY OR DISCLOSED TO ANY THIRD PARTY WITHOUT DELL'S EXPRESS WRITTEN CONSENT.

https://shop62935598.taobao.com

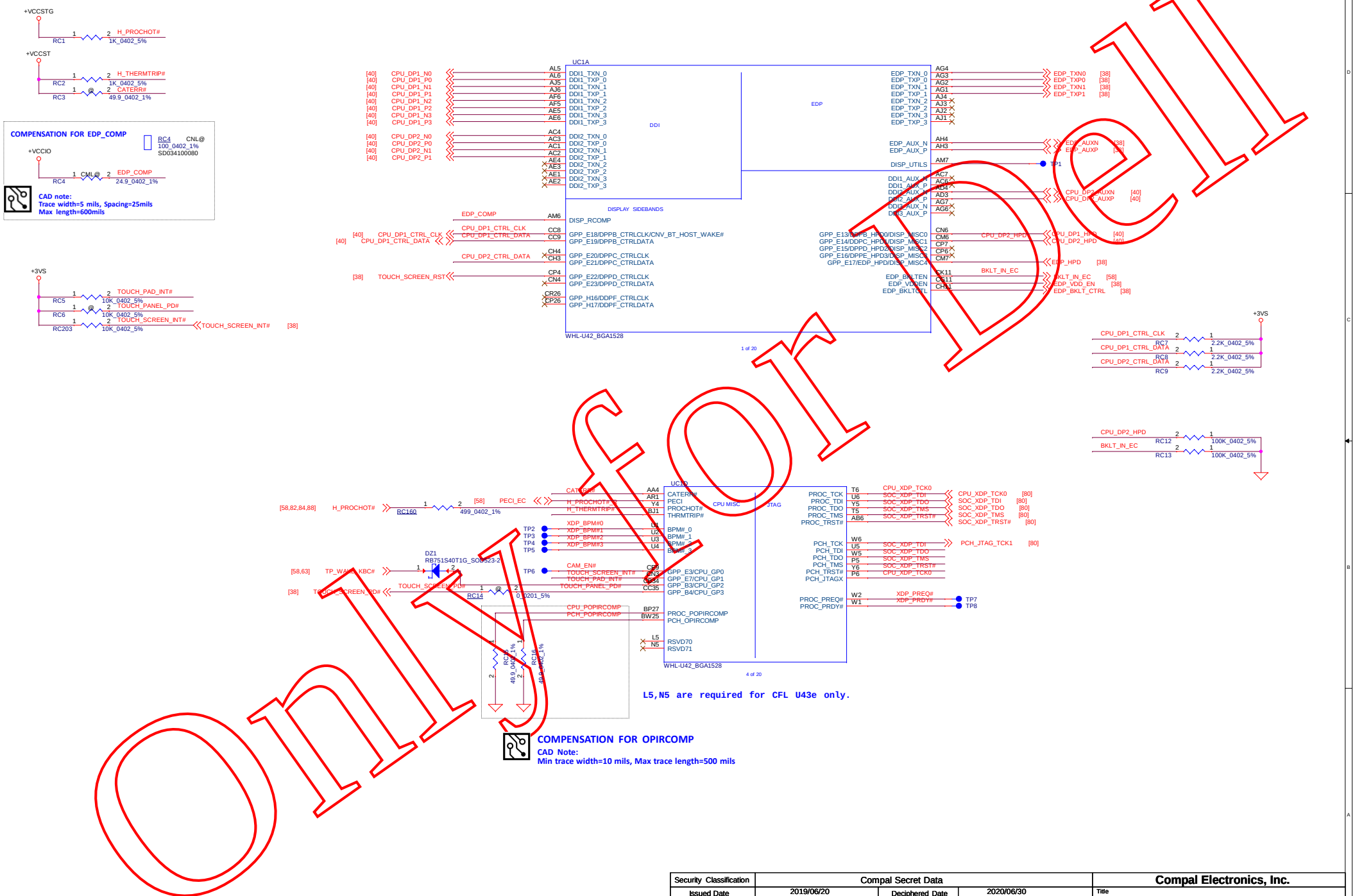

Only for Dell

Security Classification	Compal Secret Data		
Issued Date	2019/06/20	Deciphered Date	2020/06/30

THIS SHEET OF ENGINEERING DRAWING IS THE PROPRIETARY PROPERTY OF COMPAL ELECTRONICS, INC. AND CONTAINS CONFIDENTIAL AND TRADE SECRET INFORMATION. THIS SHEET MAY NOT BE TRANSFERED FROM THE CUSTODY OF THE COMPETENT DIVISION OF R&D DEPARTMENT EXCEPT AS AUTHORIZED BY COMPAL ELECTRONICS, INC. NEITHER THIS SHEET NOR THE INFORMATION IT CONTAINS MAY BE USED BY OR DISCLOSED TO ANY THIRD PARTY WITHOUT PRIOR WRITTEN CONSENT OF COMPAL ELECTRONICS, INC.

Compal Electronics, Inc.

Title: CPU(1/12))DDI,MSIC,XDP,EDP

Size: Custom | Document Number: LA-G716P | Rev: 1.0

Date: Thursday, June 20, 2019 | Sheet 6 of 101

DDR4 Interleaved Memory

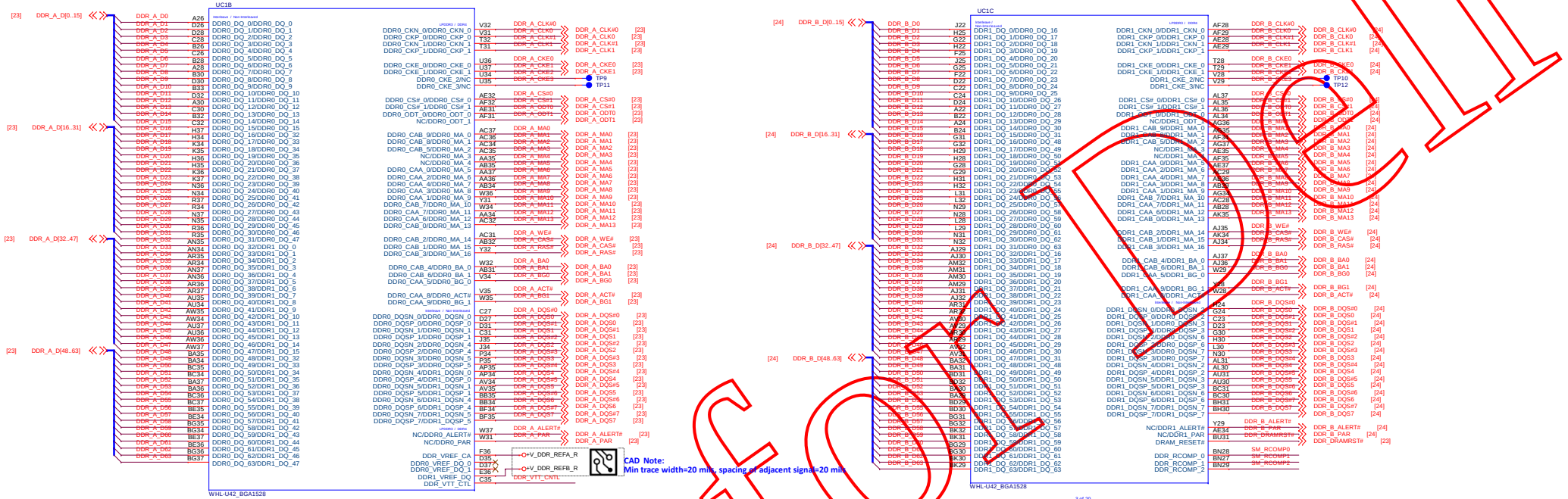

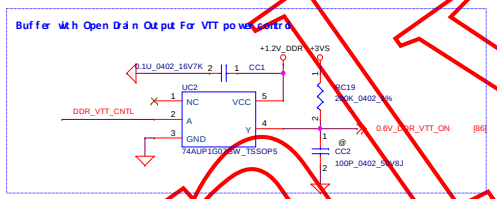

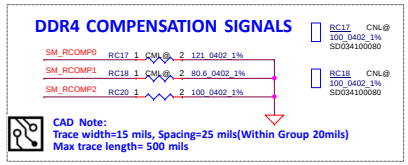

Only for SVT

Security Classification	Compal Secret Data			Compal Electronics, Inc.
Issued Date	2019/06/20	Deciphered Date	2020/06/30	Title: CPU(2/12)DDR4
THIS SHEET OF ENGINEERING DRAWING IS THE PROPRIETARY PROPERTY OF COMPAL ELECTRONICS, INC. AND CONTAINS CONFIDENTIAL AND TRADE SECRET INFORMATION. THIS SHEET MAY NOT BE TRANSFERRED FROM THE CUSTODY OF THE COMPETENT DIVISION OF R&D DEPARTMENT EXCEPT AS AUTHORIZED BY COMPAL ELECTRONICS, INC. NEITHER THIS SHEET NOR THE INFORMATION IT CONTAINS MAY BE USED BY OR DISCLOSED TO ANY THIRD PARTY WITHOUT PRIOR WRITTEN CONSENT OF COMPAL ELECTRONICS, INC.				Size: Custom / Document Number: LA-G716P / Rev: 1.0
				Date: Thursday, June 20, 2019 / Sheet 7 of 101

RC21~RC25 place colse to Device

UC1E

SPI0_CLK, SPI0_MISO, SPI0_MOSI, SPI0_IO2, SPI0_IO3, SPI0_CS0#, SPI0_CS1#, SPI0_CS2# — SPI - FLASH

GPP_D1/SPI1_CLK/BK1/SBK1, GPP_D2/SPI1_MISO_IO1/BK2/SBK2, GPP_D3/SPI1_MOSI_IO0/BK3/SBK3, GPP_D21/SPI1_IO2, GPP_D22/SPI1_IO3, GPP_D0/SPI1_CS0#/BK0/SBK0 — SPI - TOUCH

CL_CLK, CL_DATA, CL_RST# — C LINK

GPP_A0/RCIN#/TIME_SYNC1, GPP_A6/SERIRQ

GPP_C0/SMBCLK, GPP_C1/SMBDATA, GPP_C2/SMBALERT#, GPP_C3/SML0CLK, GPP_C4/SML0DATA, GPP_C5/SML0ALERT#, GPP_C6/SML1CLK, GPP_C7/SML1DATA, GPP_B23/SML1ALERT#/PCHHOT# — SMBUS , SMLINK

GPP_A1/LAD0/ESPI_IO0, GPP_A2/LAD1/ESPI_IO1, GPP_A3/LAD2/ESPI_IO2, GPP_A4/LAD3/ESPI_IO3, GPP_A5/LFRAME#/ESPI_CS#, GPP_A14/SUS_STAT#/ESPI_RESET# — LPC , ESPI

GPP_A9/CLKOUT_LPC0/ESPI_CLK, GPP_A10/CLKOUT_LPC1, GPP_A8/CLKRUN#

WHL-U42_BGA1528

5 of 20

RC21 TPM@ 10_0402_1% SD034100A80
RC22 TPM@ 10_0402_1% SD034100A80
RC23 TPM@ 10_0402_1% SD034100A80
RC24 TPM@ 10_0402_1% SD034100A80
RC25 TPM@ 10_0402_1% SD034100A80

RC21 FTPM@ S RES 1/16W 5.6 +-5% 0402 SD028560B80
RC22 FTPM@ S RES 1/16W 5.6 +-5% 0402 SD028560B80
RC23 FTPM@ S RES 1/16W 5.6 +-5% 0402 SD028560B80
RC24 FTPM@ S RES 1/16W 5.6 +-5% 0402 SD028560B80
RC25 FTPM@ S RES 1/16W 5.6 +-5% 0402 SD028560B80

SMB -> DDR4, FFS, VGA

QC1A L2N7002DW1T1G_SC88-6
QC1B L2N7002DW1T1G_SC88-6

SML1 -> EC, THM, GPU

RC192 RC193 RC194 RC195 15_0402_5%

RC32 EMI@ 33_0402_5%
CC3 @RF@ 10P_0402_50V8J

RC27 10K_0402_5%
RC206 10K_0402_5%

RC30 @ 0_0603_5%

RC31 @ 4.7K_0402_5%

Reserve For EC Auto Load Code

RC35 100K_0402_5%
RC36 100K_0402_5%
RC37 100K_0402_5%

Follow 566439

RC187 100K_0402_5%

[80] XDP_HOOK3 RC32 CMC@ 1K_0402_1% CPU_SPI_D0

RC40 place to within 1100 mil of SPIO_MOSI/SPI0_IO2 pin for XDP

RC205 100K_0402_5%

RC28 2.2K_0402_5%
RC29 2.2K_0402_5%

RC196 RC197 RC198 RC199 1K_0402_5%

RC33 RC34 1K_0402_5%

RC38 4.7K_0402_5%

RC44 4.7K_0402_5%

RC46 4.7K_0402_5%

RC207 4.7K_0402_5%

UC3 W25Q64JVSSIQ_SO8

RC39 RC41 RC177 RC181 49.9_0402_1%

CC4 0.1U_0402_10V7K

64Mb Flash ROM

UC3 place colse to UX1

UC11 W25Q128JVSIQ_SO8

RC177 RC181 49.9_0402_1%

CC74 0.1U_0402_10V7K

128Mb Flash ROM

UC11 place colse to UX1

RC39 RC40 RC41 RC42 RC43 33_0402_1% SD034330A80

RC177 RC178 RC179 RC180 RC181 33_0402_1% SD034330A80

RC45 33_0402_5%
CC5 33P_0402_50V8J

place colse to UC3

Weak Int. PD.

TLS CONFIDENTIALITY	
LOW(DEFAULT)	DISABLE
HIGH	ENABLE

Weak Int. PD.

EC interface	
LOW(DEFAULT)	LPC
HIGH	eSPI

Intel DCI-OOB	
LOW(DEFAULT)	DISABLE
HIGH	ENABLE

Only for DCI

Security Classification	Compal Secret Data		
Issued Date	2019/06/20	Deciphered Date	2020/06/30

THIS SHEET OF ENGINEERING DRAWING IS THE PROPRIETARY PROPERTY OF COMPAL ELECTRONICS, INC. AND CONTAINS CONFIDENTIAL AND TRADE SECRET INFORMATION. THIS SHEET MAY NOT BE TRANSFERRED FROM THE CUSTODY OF THE COMPETENT DIVISION OF R&D DEPARTMENT EXCEPT AS AUTHORIZED BY COMPAL ELECTRONICS, INC. NEITHER THIS SHEET NOR THE INFORMATION IT CONTAINS MAY BE USED BY OR DISCLOSED TO ANY THIRD PARTY WITHOUT PRIOR WRITTEN CONSENT OF COMPAL ELECTRONICS, INC.

Compal Electronics, Inc.

Title: **CPU(3/12)SPI,ESPI,SMB,LPC**

Size	Document Number	Rev
Custom	LA-G716P	1.0

Date: Thursday, June 20, 2019 | Sheet 8 of 101

ME_FWP
LOW = ENABLE -->ME lock, can't update ME
HIGH = DISABLE -->ME un-lock, can update ME

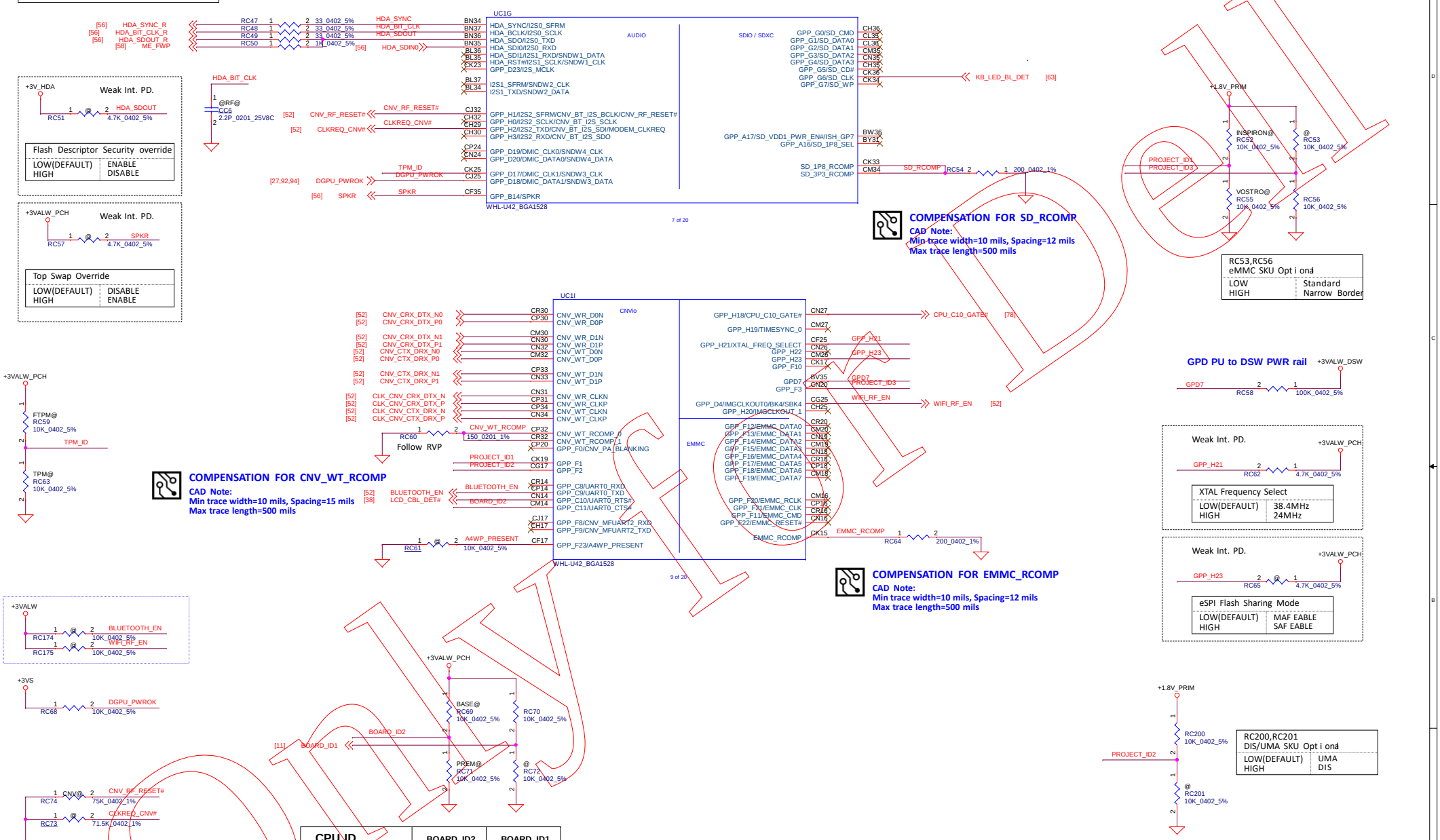

CPU ID	BOARD_ID2 (GPP_C11)	BOARD_ID1 (GPP_C12)
CML-U	---	RC70
WHL-U(Reserved)	---	RC72
Pentium/Celeron	RC69	---
i3/i5/i7	RC71	---

Security Classification	Compal Secret Data		
Issued Date	2019/06/20	Deciphered Date	2020/06/30

THIS SHEET OF ENGINEERING DRAWING IS THE PROPRIETARY PROPERTY OF COMPAL ELECTRONICS, INC. AND CONTAINS CONFIDENTIAL AND TRADE SECRET INFORMATION. THIS SHEET MAY NOT BE TRANSFERED FROM THE CUSTODY OF THE COMPETENT DIVISION OF R&D DEPARTMENT EXCEPT AS AUTHORIZED BY COMPAL ELECTRONICS, INC. NEITHER THIS SHEET NOR THE INFORMATION IT CONTAINS MAY BE USED BY OR DISCLOSED TO ANY THIRD PARTY WITHOUT PRIOR WRITTEN CONSENT OF COMPAL ELECTRONICS, INC.

Compal Electronics, Inc.

Title: **CPU(4/12)HDA,EMMC,SD**

Size: Custom | Document Number: LA-G716P | Rev: 1.0

Date: Thursday, June 20, 2019 | Sheet 9 of 101

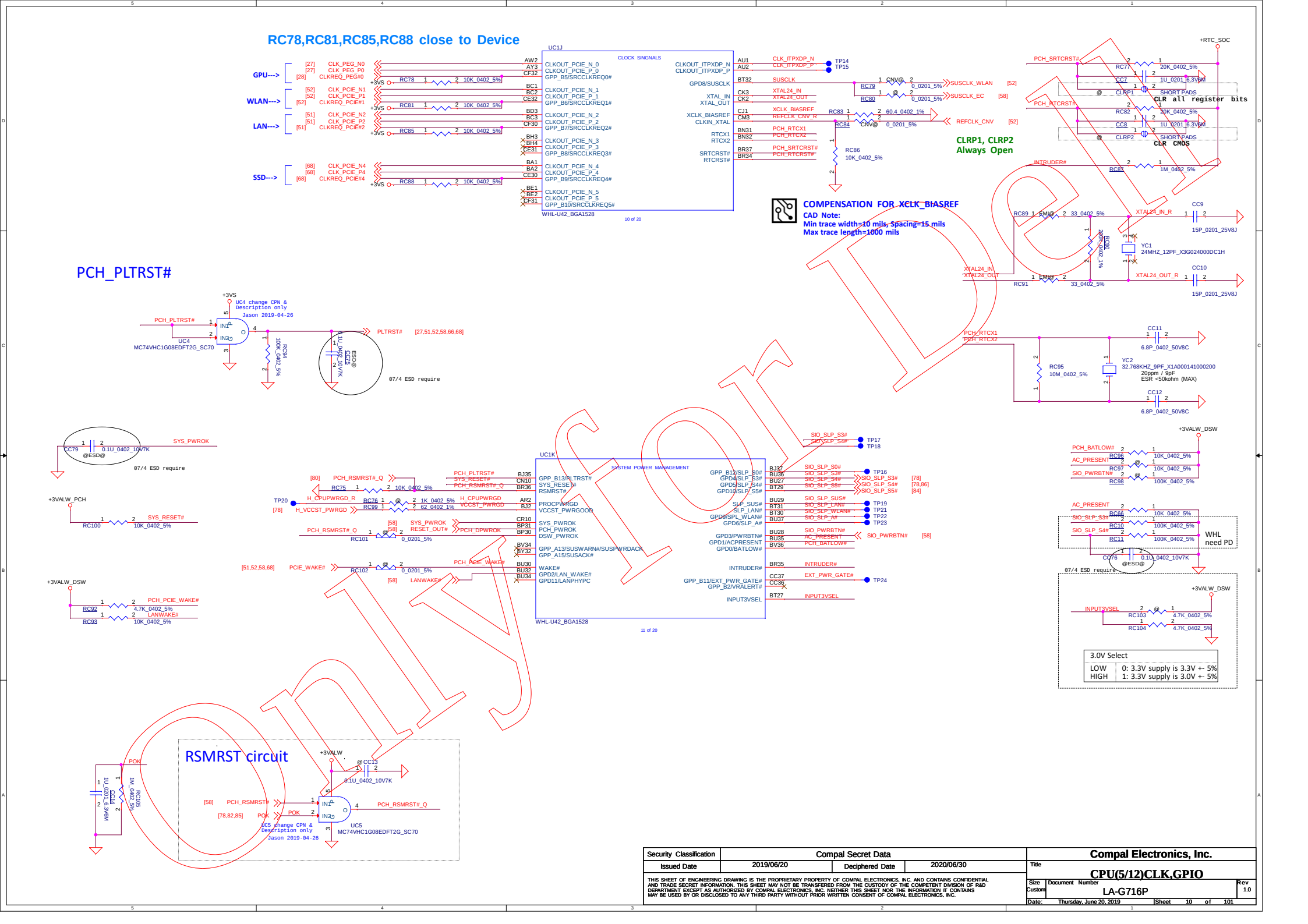

Security Classification	Compal Secret Data		
Issued Date	2019/06/20	Deciphered Date	2020/06/30

THIS SHEET OF ENGINEERING DRAWING IS THE PROPRIETARY PROPERTY OF COMPAL ELECTRONICS, INC. AND CONTAINS CONFIDENTIAL AND TRADE SECRET INFORMATION. THIS SHEET MAY NOT BE TRANSFERED FROM THE CUSTODY OF THE COMPETENT DIVISION OF R&D DEPARTMENT EXCEPT AS AUTHORIZED BY COMPAL ELECTRONICS, INC. NEITHER THIS SHEET NOR THE INFORMATION IT CONTAINS MAY BE USED BY OR DISCLOSED TO ANY THIRD PARTY WITHOUT PRIOR WRITTEN CONSENT OF COMPAL ELECTRONICS, INC.

Compal Electronics, Inc.

Title: **CPU(5/12)CLK,GPIO**

Size	Document Number	Rev
Custom	LA-G716P	1.0

Date: Thursday, June 20, 2019 | Sheet 10 of 101

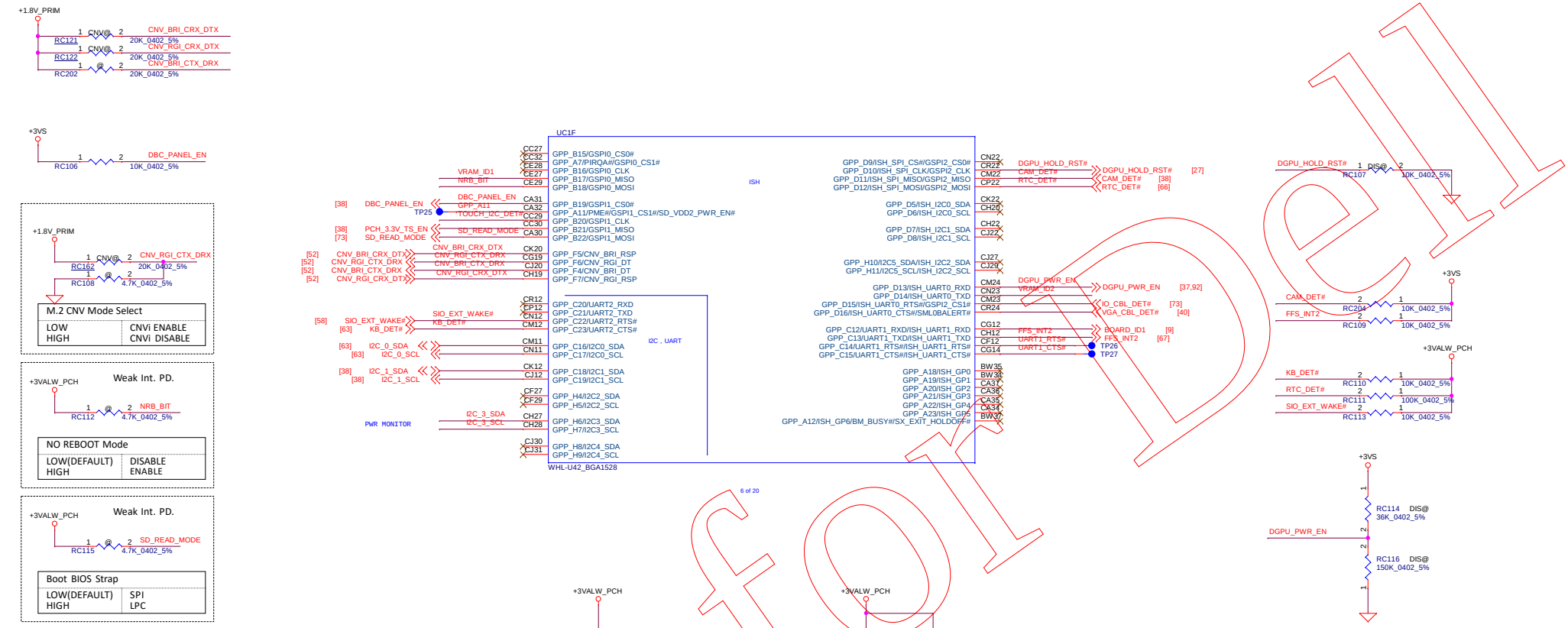

RC208,RC209 Touch panel interface	
LOW	I2C
HIGH	USB

VRAM ID (PCBA VRAM Size Config.)	VBIOS_ID2 (GPP_CN23)	VBIOS_ID1 (GPP_CE27)
2G GDDR5	0	0
Reserved	0	1
Reserved	1	0
Reserved	1	1

*Combine in X76

Only for Dell

Security Classification	Compal Secret Data		
Issued Date	2019/06/20	Deciphered Date	2020/06/30

THIS SHEET OF ENGINEERING DRAWING IS THE PROPRIETARY PROPERTY OF COMPAL ELECTRONICS, INC. AND CONTAINS CONFIDENTIAL AND TRADE SECRET INFORMATION. THIS SHEET MAY NOT BE TRANSFERED FROM THE CUSTODY OF THE COMPETENT DIVISION OF R&D DEPARTMENT EXCEPT AS AUTHORIZED BY COMPAL ELECTRONICS, INC. NEITHER THIS SHEET NOR THE INFORMATION IT CONTAINS MAY BE USED BY OR DISCLOSED TO ANY THIRD PARTY WITHOUT PRIOR WRITTEN CONSENT OF COMPAL ELECTRONICS, INC.

Compal Electronics, Inc.

Title: **CPU(6/12)GPIO**

Size: Custom | Document Number: LA-G716P | Rev: 1.0

Date: Thursday, June 20, 2019 | Sheet 11 of 101

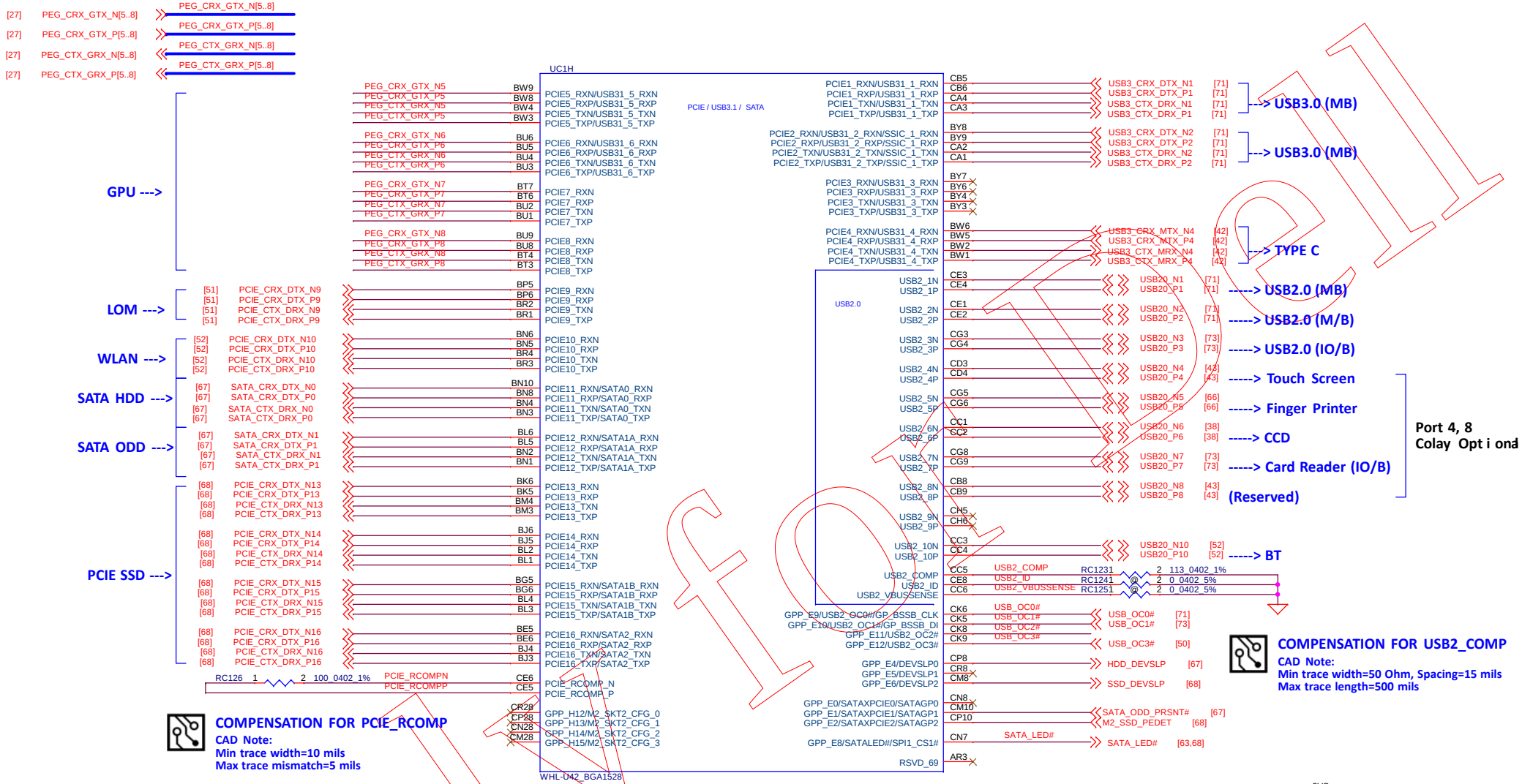

GPIO	DEVICE CONTROL
USB_OC0#	USB Port (MB)
USB_OC1#	USB Port (DB)
USB_OC2#	NA
USB_OC3#	USB Port (Type-C)
DEVSLP0	HDD
DEVSLP1	NA
DEVSLP2	M.2 SSD

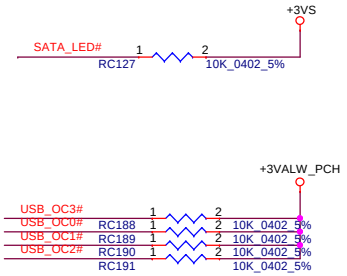

Only for test

Security Classification	Compal Secret Data		
Issued Date	2019/06/20	Deciphered Date	2020/06/30

THIS SHEET OF ENGINEERING DRAWING IS THE PROPRIETARY PROPERTY OF COMPAL ELECTRONICS, INC. AND CONTAINS CONFIDENTIAL AND TRADE SECRET INFORMATION. THIS SHEET MAY NOT BE TRANSFERED FROM THE CUSTODY OF THE COMPETENT DIVISION OF R&D DEPARTMENT EXCEPT AS AUTHORIZED BY COMPAL ELECTRONICS, INC. NEITHER THIS SHEET NOR THE INFORMATION IT CONTAINS MAY BE USED BY OR DISCLOSED TO ANY THIRD PARTY WITHOUT PRIOR WRITTEN CONSENT OF COMPAL ELECTRONICS, INC.

Compal Electronics, Inc.

Title: **CPU(7/12)PCIE,USB,SATA**

Size: Custom | Document Number: LA-G716P | Rev: 1.0

Date: Thursday, June 20, 2019 | Sheet 12 of 101

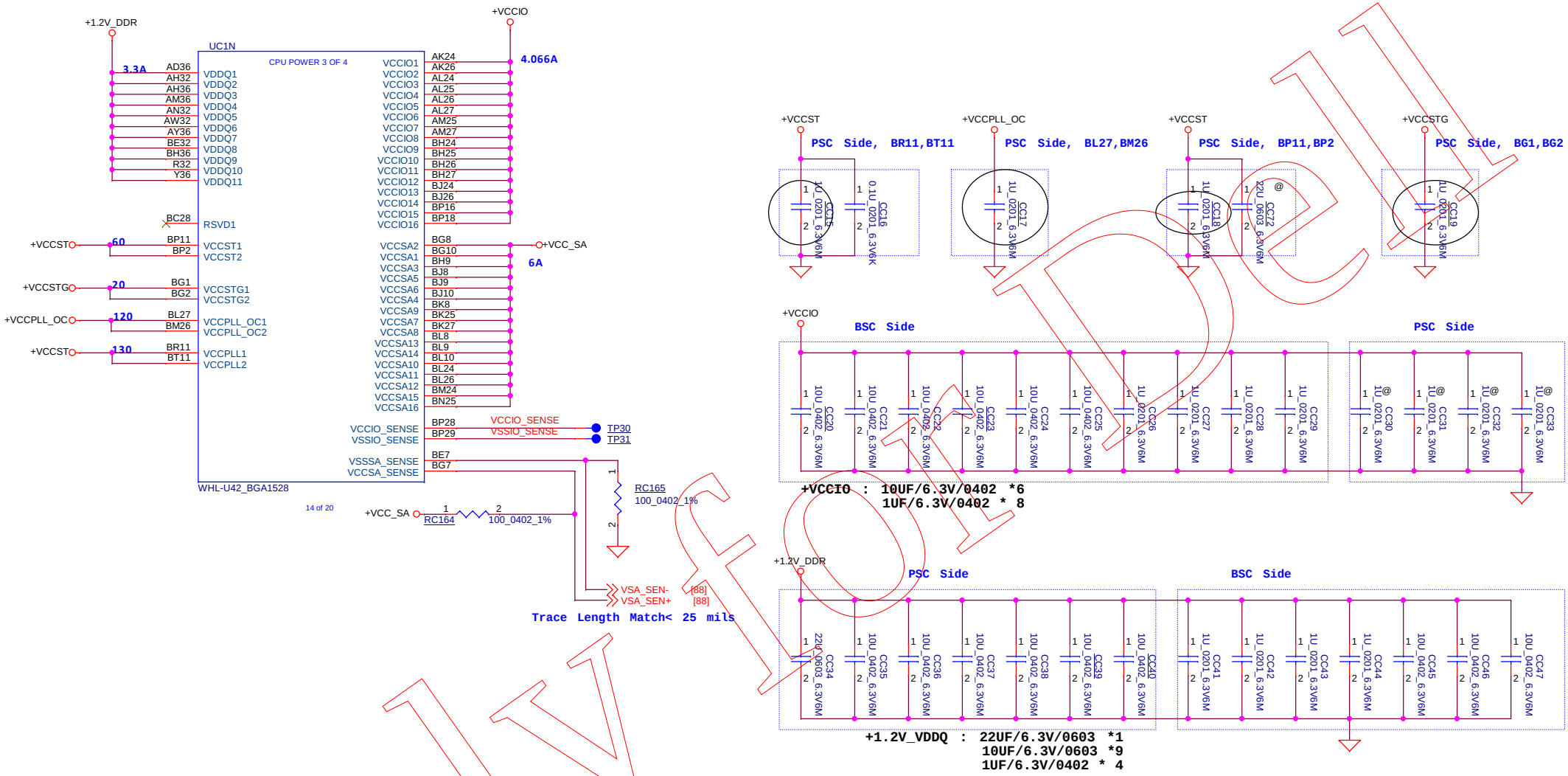

Only for reel

Security Classification	Compal Secret Data		
Issued Date	2019/06/20	Deciphered Date	2020/06/30

THIS SHEET OF ENGINEERING DRAWING IS THE PROPRIETARY PROPERTY OF COMPAL ELECTRONICS, INC. AND CONTAINS CONFIDENTIAL AND TRADE SECRET INFORMATION. THIS SHEET MAY NOT BE TRANSFERED FROM THE CUSTODY OF THE COMPETENT DIVISION OF R&D DEPARTMENT EXCEPT AS AUTHORIZED BY COMPAL ELECTRONICS, INC. NEITHER THIS SHEET NOR THE INFORMATION IT CONTAINS MAY BE USED BY OR DISCLOSED TO ANY THIRD PARTY WITHOUT PRIOR WRITTEN CONSENT OF COMPAL ELECTRONICS, INC.

Compal Electronics, Inc.

Title: **CPU(8/12)POWER**

Size: B | Document Number: LA-G716P | Rev: 1.0

Date: Thursday, June 20, 2019 | Sheet 13 of 101

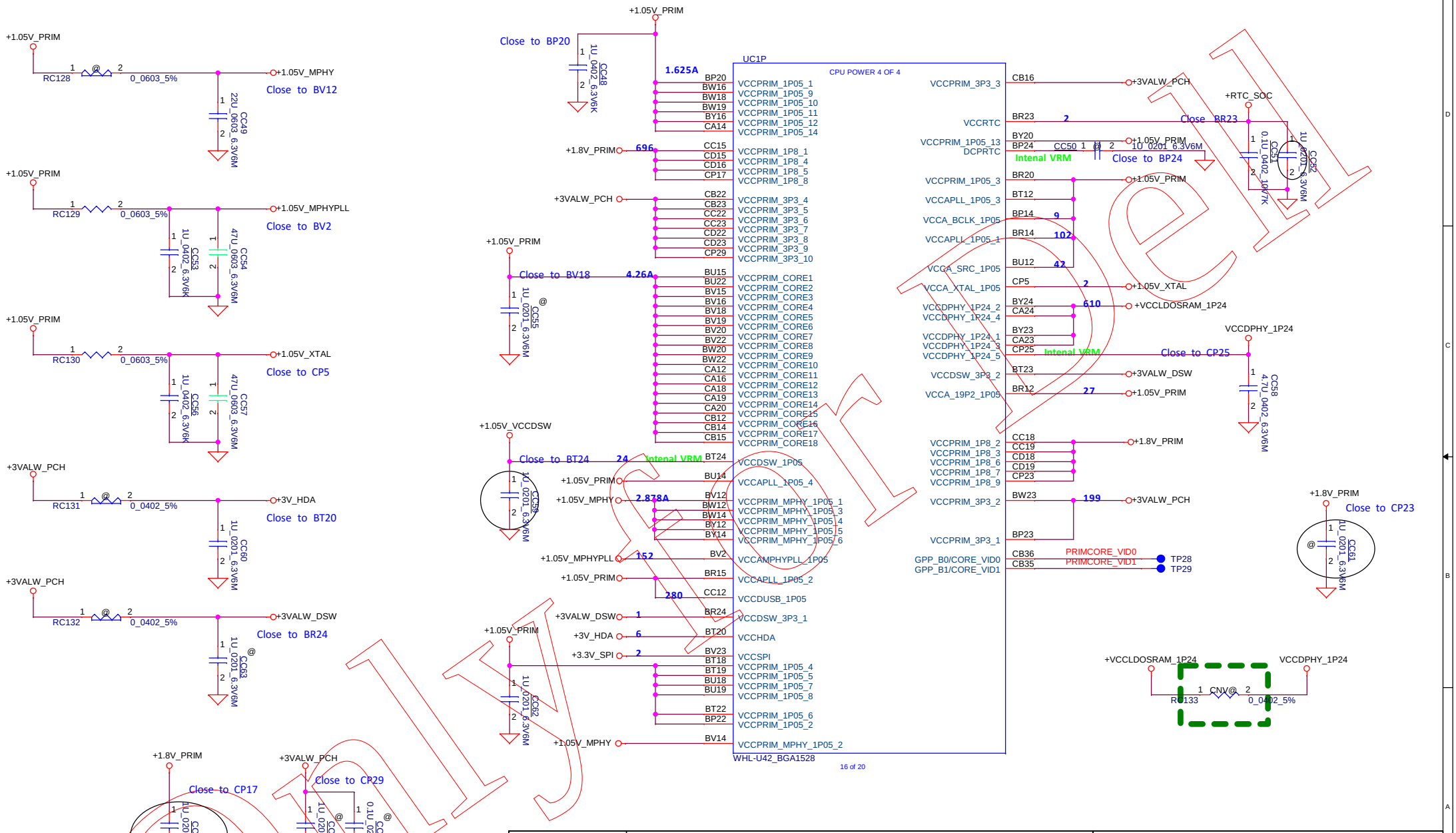

Security Classification	Compal Secret Data		
Issued Date	2019/06/20	Deciphered Date	2020/06/30

THIS SHEET OF ENGINEERING DRAWING IS THE PROPRIETARY PROPERTY OF COMPAL ELECTRONICS, INC. AND CONTAINS CONFIDENTIAL AND TRADE SECRET INFORMATION. THIS SHEET MAY NOT BE TRANSFERED FROM THE CUSTODY OF THE COMPETENT DIVISION OF R&D DEPARTMENT EXCEPT AS AUTHORIZED BY COMPAL ELECTRONICS, INC. NEITHER THIS SHEET NOR THE INFORMATION IT CONTAINS MAY BE USED BY OR DISCLOSED TO ANY THIRD PARTY WITHOUT PRIOR WRITTEN CONSENT OF COMPAL ELECTRONICS, INC.

Compal Electronics, Inc.

Title: **CPU(9/12)Power**

Size	Document Number	Rev
B	LA-G716P	1.0

Date: Thursday, June 20, 2019 | Sheet 14 of 101

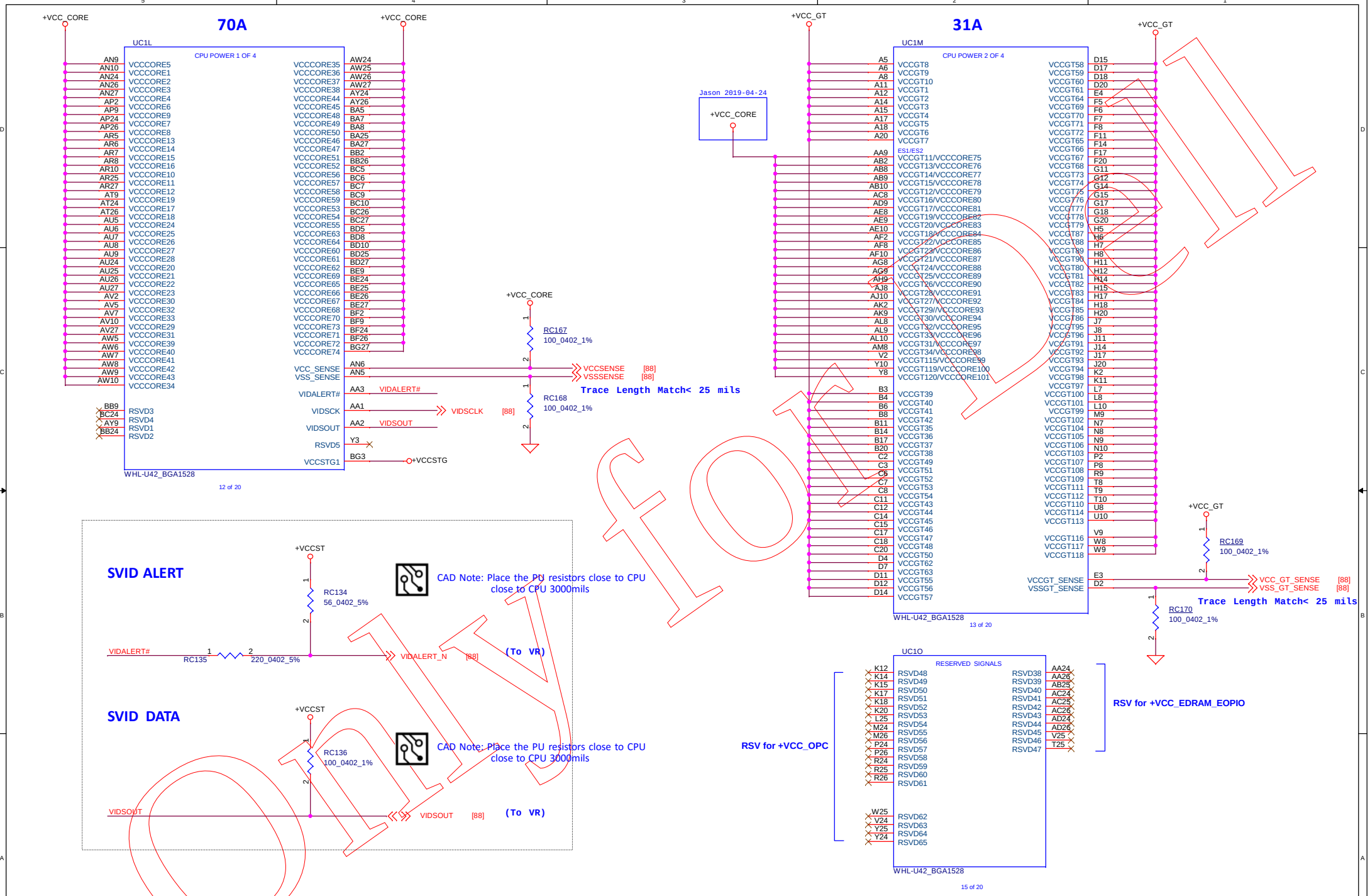

Security Classification	Compal Secret Data		
Issued Date	2019/06/20	Deciphered Date	2020/06/30

THIS SHEET OF ENGINEERING DRAWING IS THE PROPRIETARY PROPERTY OF COMPAL ELECTRONICS, INC. AND CONTAINS CONFIDENTIAL AND TRADE SECRET INFORMATION. THIS SHEET MAY NOT BE TRANSFERED FROM THE CUSTODY OF THE COMPETENT DIVISION OF R&D DEPARTMENT EXCEPT AS AUTHORIZED BY COMPAL ELECTRONICS, INC. NEITHER THIS SHEET NOR THE INFORMATION IT CONTAINS MAY BE USED BY OR DISCLOSED TO ANY THIRD PARTY WITHOUT PRIOR WRITTEN CONSENT OF COMPAL ELECTRONICS, INC.

Compal Electronics, Inc.

Title: CPU(10/12)POWER,SVID

Size | Document Number: LA-G716P | Rev 1.0

Date: Thursday, June 20, 2019 | Sheet 15 of 101

Only for Test

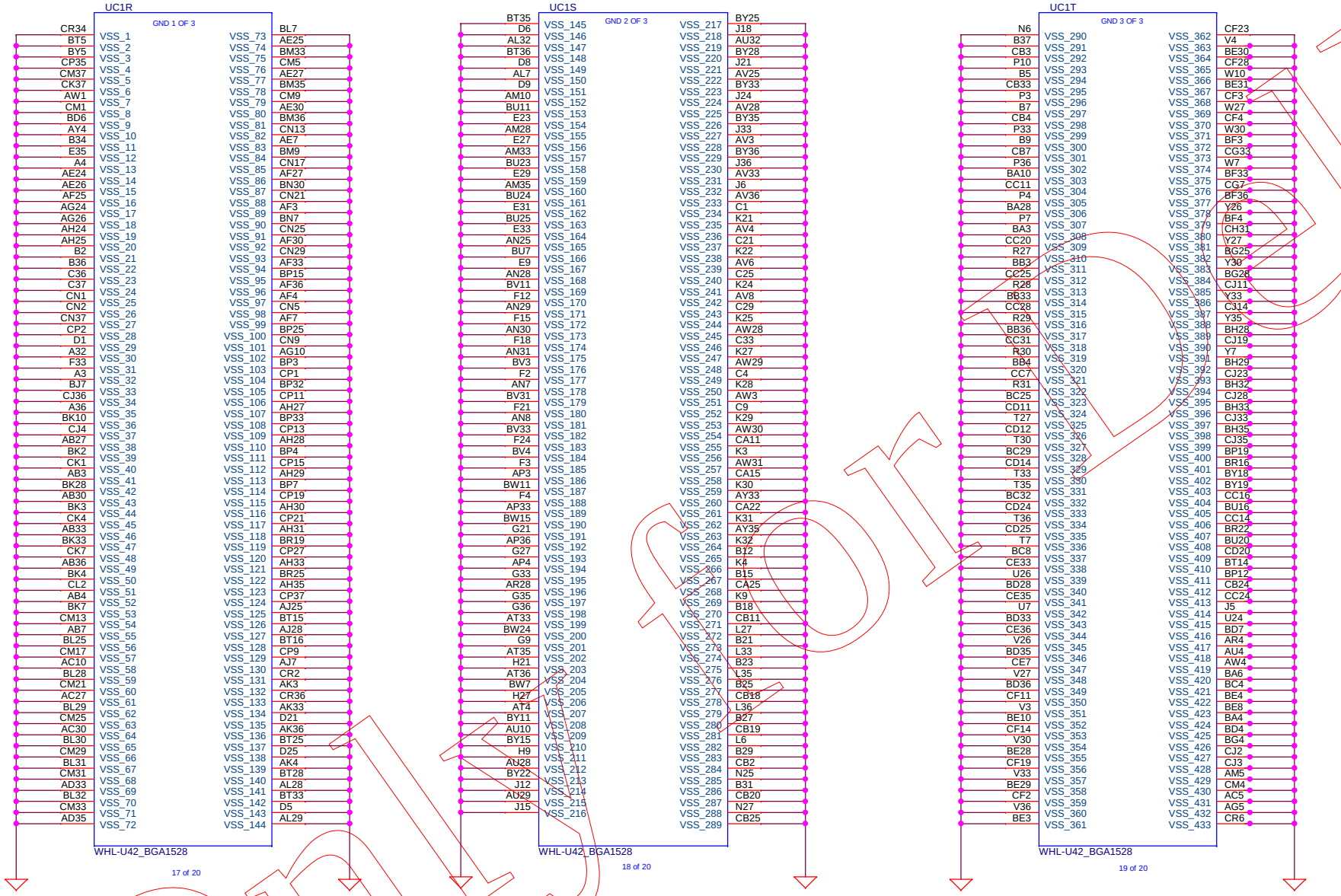

Only for reel

Security Classification	Compal Secret Data		
Issued Date	2019/06/20	Deciphered Date	2020/06/30

THIS SHEET OF ENGINEERING DRAWING IS THE PROPRIETARY PROPERTY OF COMPAL ELECTRONICS, INC. AND CONTAINS CONFIDENTIAL AND TRADE SECRET INFORMATION. THIS SHEET MAY NOT BE TRANSFERED FROM THE CUSTODY OF THE COMPETENT DIVISION OF R&D DEPARTMENT EXCEPT AS AUTHORIZED BY COMPAL ELECTRONICS, INC. NEITHER THIS SHEET NOR THE INFORMATION IT CONTAINS MAY BE USED BY OR DISCLOSED TO ANY THIRD PARTY WITHOUT PRIOR WRITTEN CONSENT OF COMPAL ELECTRONICS, INC.

Compal Electronics, Inc.

Title: **CPU(11/12)GND**

Size | Document Number: LA-G716P | Rev: 1.0

Date: Thursday, June 20, 2019 | Sheet 16 of 101

Ref 575418

Reset sequence after PCU PLL is locked	
CFG0	1 : (DEFAULT) Normal Operation; No Stall 0 : Stall

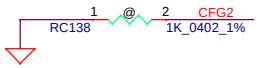

PCI Express Static Lane Reversal For All PEG Ports	
CFG2	1 : (DEFAULT) Normal Operation 0 : Lane Reversal

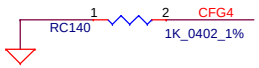

Display Port Presence Strap	
CFG4	0 : Enabled; An external Display Port device is connected to the Embedded Display Port 1 : Disabled; No Physical Display Port attached to Embedded Display Port

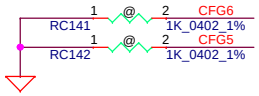

PCI Express Bifurcation	
CFG[6:5]	— 00 = 1x8, 2x4 PCI Express* — 01 = reserved — 10 = 2x8 PCI Express* — 11 = 1x16 PCI Express*

PEG Training	
CFG7	1 : (default) PEG Train immediately following RESET# de-assertion 0 : PEG Wait for BIOS for training.

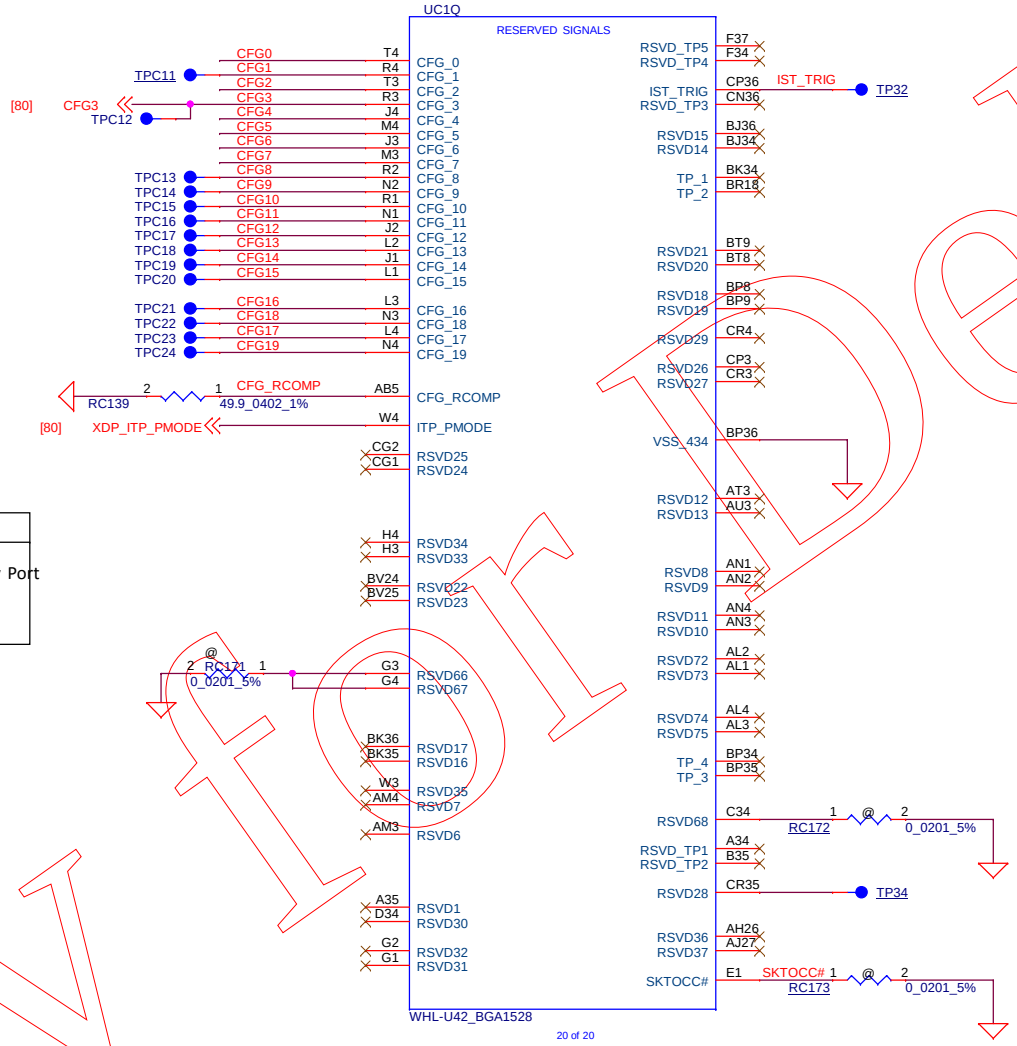

Only for Dell

Security Classification	Compal Secret Data		
Issued Date	2019/06/20	Deciphered Date	2020/06/30

THIS SHEET OF ENGINEERING DRAWING IS THE PROPRIETARY PROPERTY OF COMPAL ELECTRONICS, INC. AND CONTAINS CONFIDENTIAL AND TRADE SECRET INFORMATION. THIS SHEET MAY NOT BE TRANSFERED FROM THE CUSTODY OF THE COMPETENT DIVISION OF R&D DEPARTMENT EXCEPT AS AUTHORIZED BY COMPAL ELECTRONICS, INC. NEITHER THIS SHEET NOR THE INFORMATION IT CONTAINS MAY BE USED BY OR DISCLOSED TO ANY THIRD PARTY WITHOUT PRIOR WRITTEN CONSENT OF COMPAL ELECTRONICS, INC.

Compal Electronics, Inc.

Title: CPU(12/12)RSVD

Size | Document Number: LA-G716P | Rev: 1.0

Date: Thursday, June 20, 2019 | Sheet 17 of 101

Main Function:

Reserve

Only for Dell

Security Classification	Compal Secret Data		
Issued Date	2019/06/20	Deciphered Date	2020/06/30

THIS SHEET OF ENGINEERING DRAWING IS THE PROPRIETARY PROPERTY OF COMPAL ELECTRONICS, INC. AND CONTAINS CONFIDENTIAL AND TRADE SECRET INFORMATION. THIS SHEET MAY NOT BE TRANSFERED FROM THE CUSTODY OF THE COMPETENT DIVISION OF R&D DEPARTMENT EXCEPT AS AUTHORIZED BY COMPAL ELECTRONICS, INC. NEITHER THIS SHEET NOR THE INFORMATION IT CONTAINS MAY BE USED BY OR DISCLOSED TO ANY THIRD PARTY WITHOUT PRIOR WRITTEN CONSENT OF COMPAL ELECTRONICS, INC.

Compal Electronics, Inc.

Title: **RSVD**

Size	Document Number	Rev
B	LA-G716P	1.0

Date: Thursday, June 20, 2019 | Sheet 18 of 101

Main Function:

Reserve

Only for Dell

Security Classification	Compal Secret Data		
Issued Date	2019/06/20	Deciphered Date	2020/06/30

THIS SHEET OF ENGINEERING DRAWING IS THE PROPRIETARY PROPERTY OF COMPAL ELECTRONICS, INC. AND CONTAINS CONFIDENTIAL AND TRADE SECRET INFORMATION. THIS SHEET MAY NOT BE TRANSFERED FROM THE CUSTODY OF THE COMPETENT DIVISION OF R&D DEPARTMENT EXCEPT AS AUTHORIZED BY COMPAL ELECTRONICS, INC. NEITHER THIS SHEET NOR THE INFORMATION IT CONTAINS MAY BE USED BY OR DISCLOSED TO ANY THIRD PARTY WITHOUT PRIOR WRITTEN CONSENT OF COMPAL ELECTRONICS, INC.

Compal Electronics, Inc.

Title: **(RSVD)**

Size	Document Number	Rev
B	LA-G716P	1.0

Date: Thursday, June 20, 2019 | Sheet 19 of 101

Main Function:

Reserve

Only for Dell

Security Classification	Compal Secret Data		
Issued Date	2019/06/20	Deciphered Date	2020/06/30

THIS SHEET OF ENGINEERING DRAWING IS THE PROPRIETARY PROPERTY OF COMPAL ELECTRONICS, INC. AND CONTAINS CONFIDENTIAL AND TRADE SECRET INFORMATION. THIS SHEET MAY NOT BE TRANSFERED FROM THE CUSTODY OF THE COMPETENT DIVISION OF R&D DEPARTMENT EXCEPT AS AUTHORIZED BY COMPAL ELECTRONICS, INC. NEITHER THIS SHEET NOR THE INFORMATION IT CONTAINS MAY BE USED BY OR DISCLOSED TO ANY THIRD PARTY WITHOUT PRIOR WRITTEN CONSENT OF COMPAL ELECTRONICS, INC.

Compal Electronics, Inc.

Title: (RSVD)

Size: | Document Number: LA-G716P | Rev: 1.0

Date: Thursday, June 20, 2019 | Sheet 20 of 101

Main Function:

Reserve

Only for Dell

Security Classification	Compal Secret Data		
Issued Date	2019/06/20	Deciphered Date	2020/06/30

THIS SHEET OF ENGINEERING DRAWING IS THE PROPRIETARY PROPERTY OF COMPAL ELECTRONICS, INC. AND CONTAINS CONFIDENTIAL AND TRADE SECRET INFORMATION. THIS SHEET MAY NOT BE TRANSFERED FROM THE CUSTODY OF THE COMPETENT DIVISION OF R&D DEPARTMENT EXCEPT AS AUTHORIZED BY COMPAL ELECTRONICS, INC. NEITHER THIS SHEET NOR THE INFORMATION IT CONTAINS MAY BE USED BY OR DISCLOSED TO ANY THIRD PARTY WITHOUT PRIOR WRITTEN CONSENT OF COMPAL ELECTRONICS, INC.

Compal Electronics, Inc.

Title: (RSVD)

Size: | Document Number: LA-G716P | Rev: 1.0

Date: Thursday, June 20, 2019 | Sheet 21 of 101

Main Function:

Reserve

Only for Dell

Security Classification	Compal Secret Data		
Issued Date	2019/06/20	Deciphered Date	2020/06/30

THIS SHEET OF ENGINEERING DRAWING IS THE PROPRIETARY PROPERTY OF COMPAL ELECTRONICS, INC. AND CONTAINS CONFIDENTIAL AND TRADE SECRET INFORMATION. THIS SHEET MAY NOT BE TRANSFERED FROM THE CUSTODY OF THE COMPETENT DIVISION OF R&D DEPARTMENT EXCEPT AS AUTHORIZED BY COMPAL ELECTRONICS, INC. NEITHER THIS SHEET NOR THE INFORMATION IT CONTAINS MAY BE USED BY OR DISCLOSED TO ANY THIRD PARTY WITHOUT PRIOR WRITTEN CONSENT OF COMPAL ELECTRONICS, INC.

Compal Electronics, Inc.

Title: (RSVD)

Size: | Document Number: LA-G716P | Rev: 1.0

Date: Thursday, June 20, 2019 | Sheet 22 of 101

Main Func = DDR

Layout Note:
Place near JDIMM1.257,259

Layout Note:
Place near JDIMM1.258

Layout Note:
Place near JDIMM1.255

Layout Note:
Place near JDIMM1

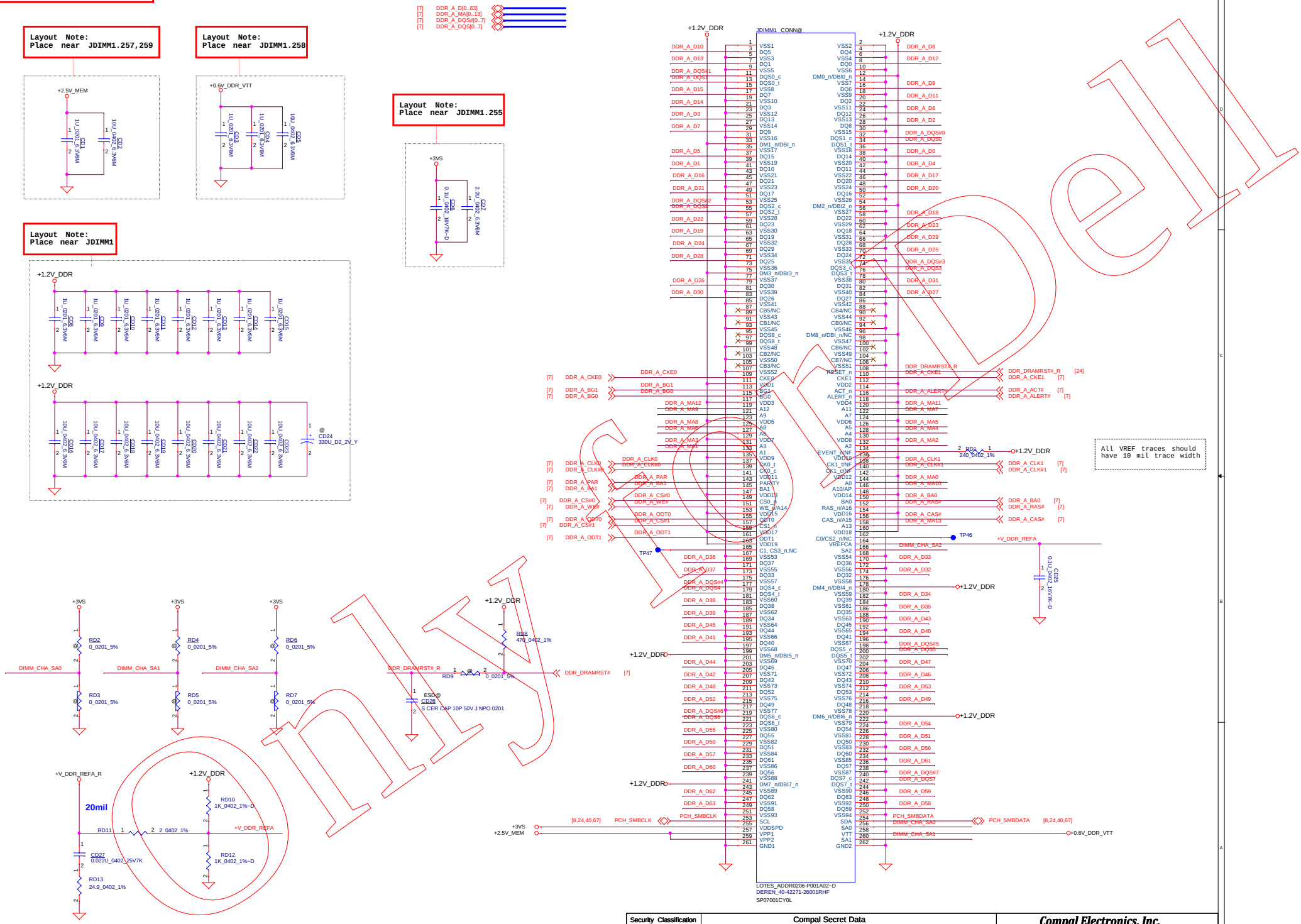

THIS SHEET OF ENGINEERING DRAWING IS THE PROPRIETARY PROPERTY OF COMPAL ELECTRONICS, INC. AND CONTAINS CONFIDENTIAL AND TRADE SECRET INFORMATION. THIS SHEET MAY NOT BE TRANSFERRED FROM THE CUSTODY OF THE COMPETENT DIVISION OF R&D DEPARTMENT EXCEPT AS AUTHORIZED BY COMPAL ELECTRONICS, INC. NEITHER THIS SHEET NOR THE INFORMATION IT CONTAINS MAY BE USED BY OR DISCLOSED TO ANY THIRD PARTY WITHOUT PRIOR WRITTEN CONSENT OF COMPAL ELECTRONICS, INC.

Main Func = DDR

Layout Note:
Place near JDIMM2.257,259

Layout Note:
Place near JDIMM2.258

Layout Note:
Place near JDIMM2.255

Layout Note:
Place near JDIMM2

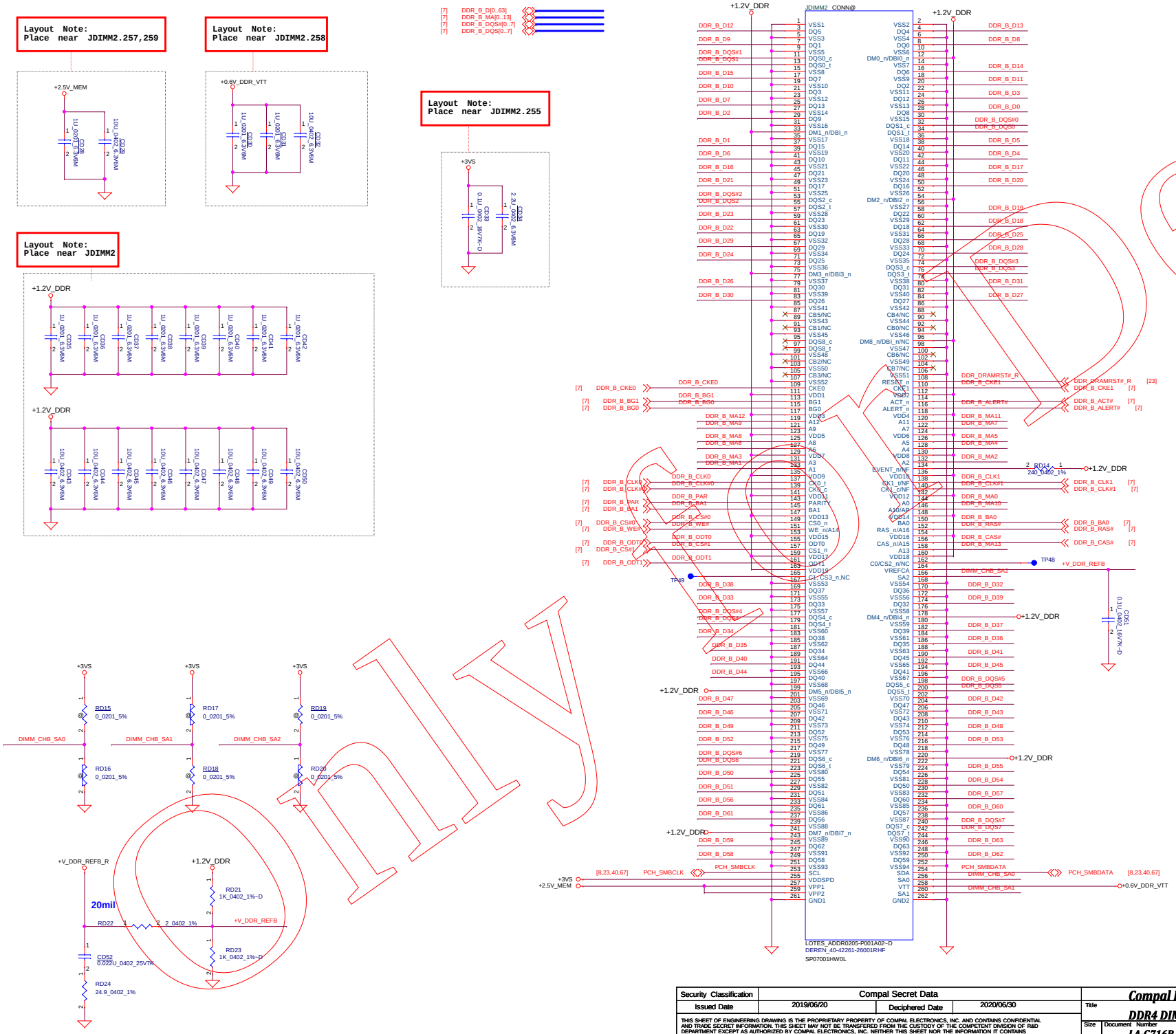

Security Classification	Compal Secret Data		
Issued Date	2019/06/20	Deciphered Date	2020/06/30

THIS SHEET OF ENGINEERING DRAWING IS THE PROPRIETARY PROPERTY OF COMPAL ELECTRONICS, INC. AND CONTAINS CONFIDENTIAL AND TRADE SECRET INFORMATION. THIS SHEET MAY NOT BE TRANSFERED FROM THE CUSTODY OF THE COMPETENT DIVISION OF R&D DEPARTMENT EXCEPT AS AUTHORIZED BY COMPAL ELECTRONICS, INC. NEITHER THIS SHEET NOR THE INFORMATION IT CONTAINS MAY BE USED BY OR DISCLOSED TO ANY THIRD PARTY WITHOUT PRIOR WRITTEN CONSENT OF COMPAL ELECTRONICS, INC.

Compal Electronics, Inc.

Title: DDR4 DIMMB STD

Size | Document Number: LA-G716P | Rev: 1.0

Date: Thursday, June 20, 2019 | Sheet 24 of 101

Main Function:

Reserve

Only for Dell

Security Classification	Compal Secret Data		
Issued Date	2019/06/20	Deciphered Date	2020/06/30

THIS SHEET OF ENGINEERING DRAWING IS THE PROPRIETARY PROPERTY OF COMPAL ELECTRONICS, INC. AND CONTAINS CONFIDENTIAL AND TRADE SECRET INFORMATION. THIS SHEET MAY NOT BE TRANSFERED FROM THE CUSTODY OF THE COMPETENT DIVISION OF R&D DEPARTMENT EXCEPT AS AUTHORIZED BY COMPAL ELECTRONICS, INC. NEITHER THIS SHEET NOR THE INFORMATION IT CONTAINS MAY BE USED BY OR DISCLOSED TO ANY THIRD PARTY WITHOUT PRIOR WRITTEN CONSENT OF COMPAL ELECTRONICS, INC.

Compal Electronics, Inc.

Title: (RSVD)

Size: | Document Number: LA-G716P | Rev: 1.0

Date: Thursday, June 20, 2019 | Sheet 25 of 101

Main Function:

Reserve

Only for Dell

Security Classification	Compal Secret Data		
Issued Date	2019/06/20	Deciphered Date	2020/06/30

THIS SHEET OF ENGINEERING DRAWING IS THE PROPRIETARY PROPERTY OF COMPAL ELECTRONICS, INC. AND CONTAINS CONFIDENTIAL AND TRADE SECRET INFORMATION. THIS SHEET MAY NOT BE TRANSFERED FROM THE CUSTODY OF THE COMPETENT DIVISION OF R&D DEPARTMENT EXCEPT AS AUTHORIZED BY COMPAL ELECTRONICS, INC. NEITHER THIS SHEET NOR THE INFORMATION IT CONTAINS MAY BE USED BY OR DISCLOSED TO ANY THIRD PARTY WITHOUT PRIOR WRITTEN CONSENT OF COMPAL ELECTRONICS, INC.

Compal Electronics, Inc.

Title: (RSVD)

Size: | Document Number: LA-G716P | Rev: 1.0

Date: Thursday, June 20, 2019 | Sheet 26 of 101

Main Func = GPU

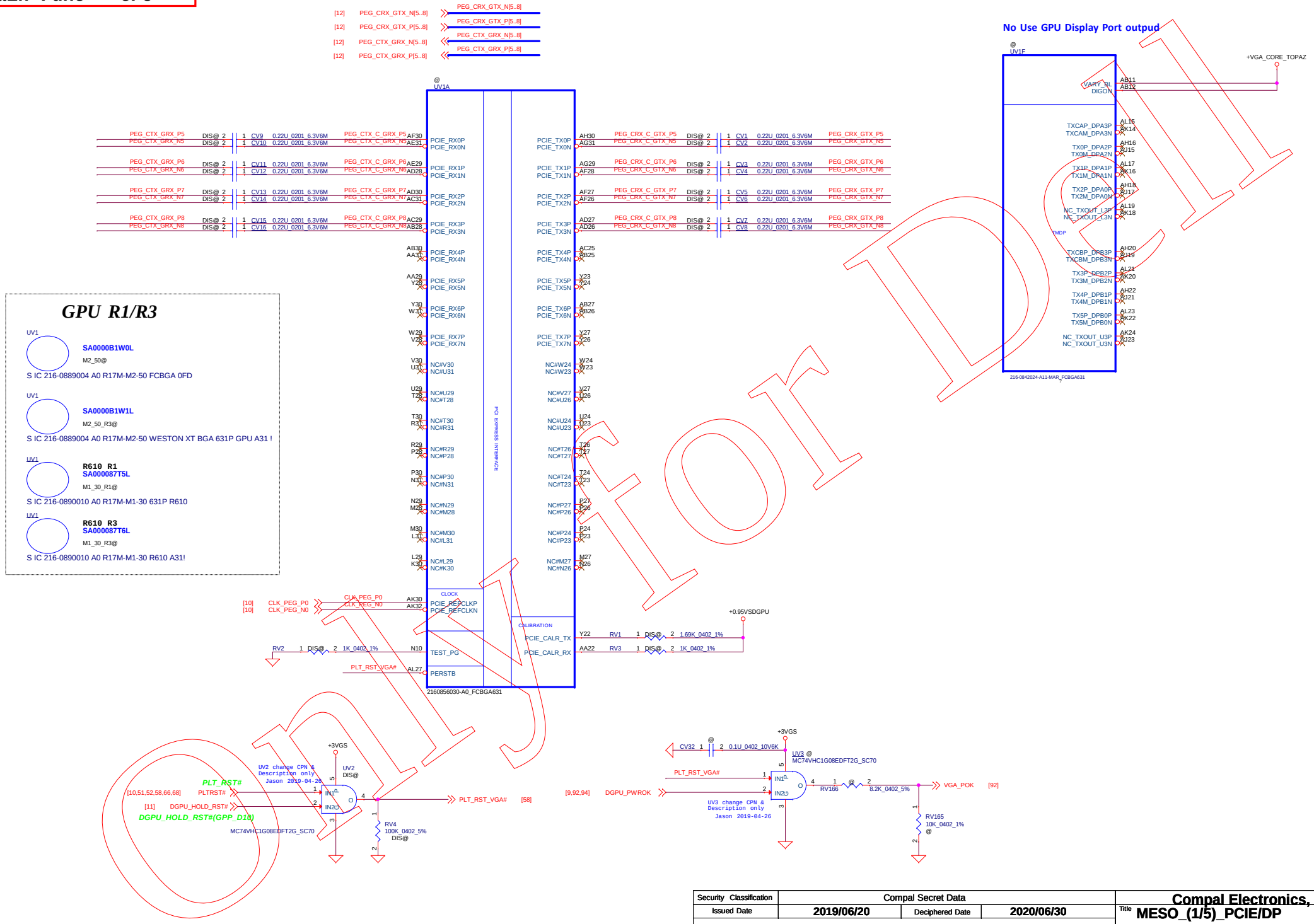

Only for Dell

Security Classification	Compal Secret Data		
Issued Date	2019/06/20	Deciphered Date	2020/06/30

THIS SHEET OF ENGINEERING DRAWING IS THE PROPRIETARY PROPERTY OF COMPAL ELECTRONICS, INC. AND CONTAINS CONFIDENTIAL AND TRADE SECRET INFORMATION. THIS SHEET MAY NOT BE TRANSFERED FROM THE CUSTODY OF THE COMPETENT DIVISION OF R&D DEPARTMENT EXCEPT AS AUTHORIZED BY COMPAL ELECTRONICS, INC. NEITHER THIS SHEET NOR THE INFORMATION IT CONTAINS MAY BE USED BY OR DISCLOSED TO ANY THIRD PARTY WITHOUT PRIOR WRITTEN CONSENT OF COMPAL ELECTRONICS, INC.

Compal Electronics, Inc.

Title: MESO_(1/5)_PCIE/DP

Size | Document Number: LA-G716P | Rev: 1.0

Date: Thursday, June 20, 2019 | Sheet 27 of 101

Main Func = GPU

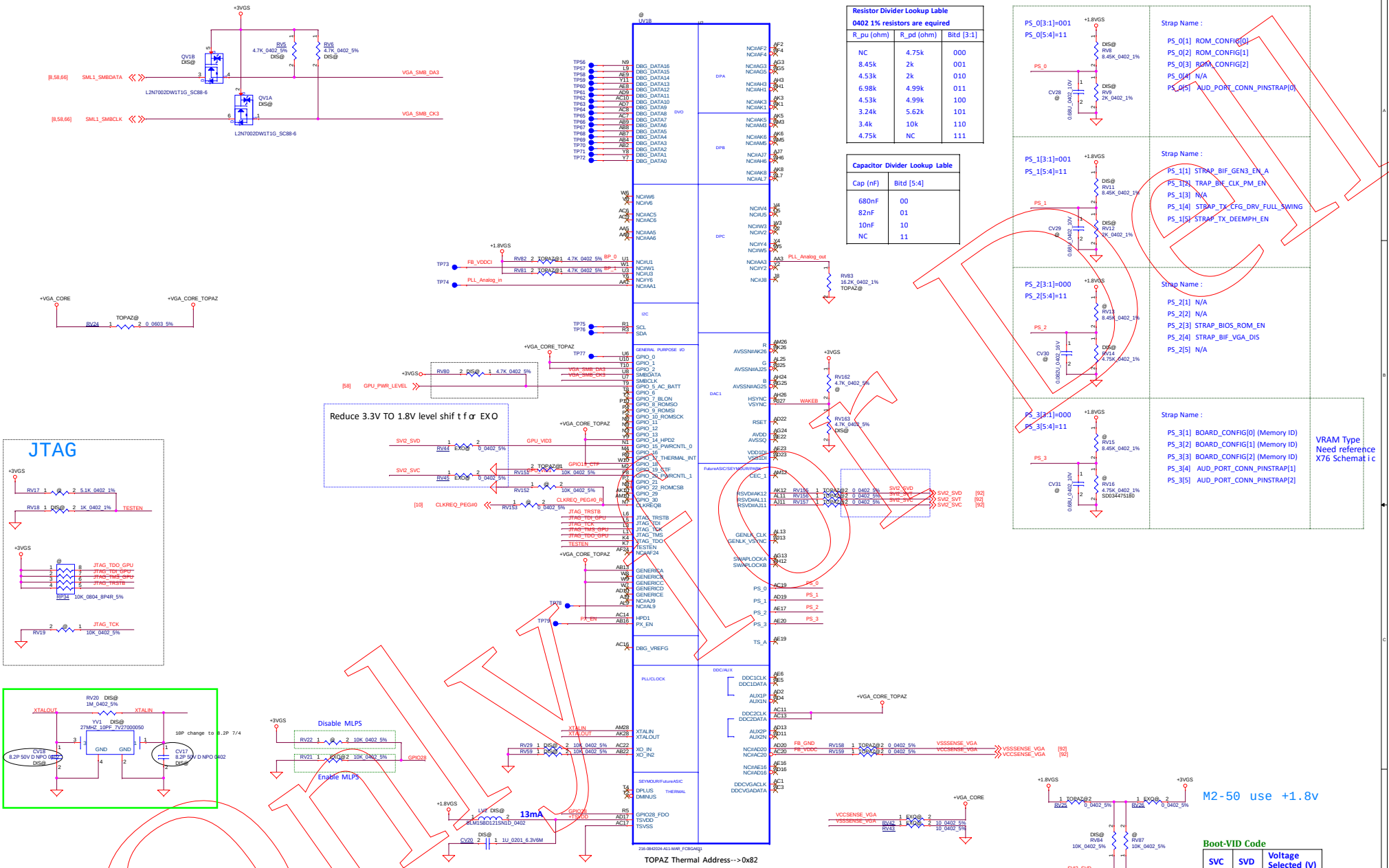

Resistor Divider Lookup Lable

0402 1% resistors are equired

R_pu (ohm)	R_pd (ohm)	Bitd [3:1]
NC	4.75k	000
8.45k	2k	001
4.53k	2k	010
6.98k	4.99k	011
4.53k	4.99k	100
3.24k	5.62k	101
3.4k	10k	110
4.75k	NC	111

Capacitor Divider Lookup Lable

Cap (nF)	Bitd [5:4]
680nF	00
82nF	01
10nF	10
NC	11

Boot-VID Code

SVC	SVD	Voltage Selected (V)
0	0	1.1
0	1	1.0
1	0	0.9
1	1	0.8

Security Classification	Compal Secret Data		
Issued Date	2019/06/20	Deciphered Date	2020/06/30

THIS SHEET OF ENGINEERING DRAWING IS THE PROPRIETARY PROPERTY OF COMPAL ELECTRONICS, INC. AND CONTAINS CONFIDENTIAL AND TRADE SECRET INFORMATION. THIS SHEET MAY NOT BE TRANSFERED FROM THE CUSTODY OF THE COMPETENT DIVISION OF R&D DEPARTMENT EXCEPT AS AUTHORIZED BY COMPAL ELECTRONICS, INC. NEITHER THIS SHEET NOR THE INFORMATION IT CONTAINS MAY BE USED BY OR DISCLOSED TO ANY THIRD PARTY WITHOUT PRIOR WRITTEN CONSENT OF COMPAL ELECTRONICS, INC.

Title: **Compal Electronics, Inc.**
MESO_(2/5)_MSIC

Size: | Document Number: **LA-G716P** | Rev: 1.0

Date: Thursday, June 20, 2019 | Sheet 28 of 101

Main Func = GPU

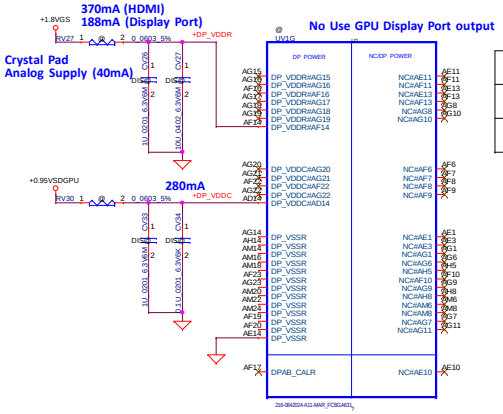

+VGA_CORE	10uF	2.2uF 1uF	0.1uF
VDDC	6	16	0
VDDCI	2	3	2

+0.95VSDGPU	10uF	1uF	0.1uF
PCIE_VDDC	1	6	0
BIF_VDDC	1	2	0
SPLL_VDDC	1	1	1
+DP_VDDC	0	1	1

+1.35V_MEM_GFX	10uF	2.2uF	0.1uF	0.01uF
VDDR1	1	5	1	1

+3VGS	10uF	1uF	0.1uF
VDDR3	0	1	0

+1.8VGS	10uF	1uF	0.1uF
PCIE_PVDD	1	1	0
MPLL_PVDD	2	1	0
SPLL_PVDD	1	1	0
VDDR4 (NC)	0	0	0
VDD_CT	0	1	0
+TSVDD	0	1	0
+DP_VDDR	1	1	0

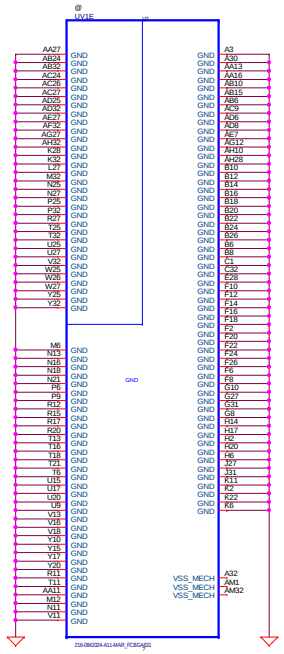

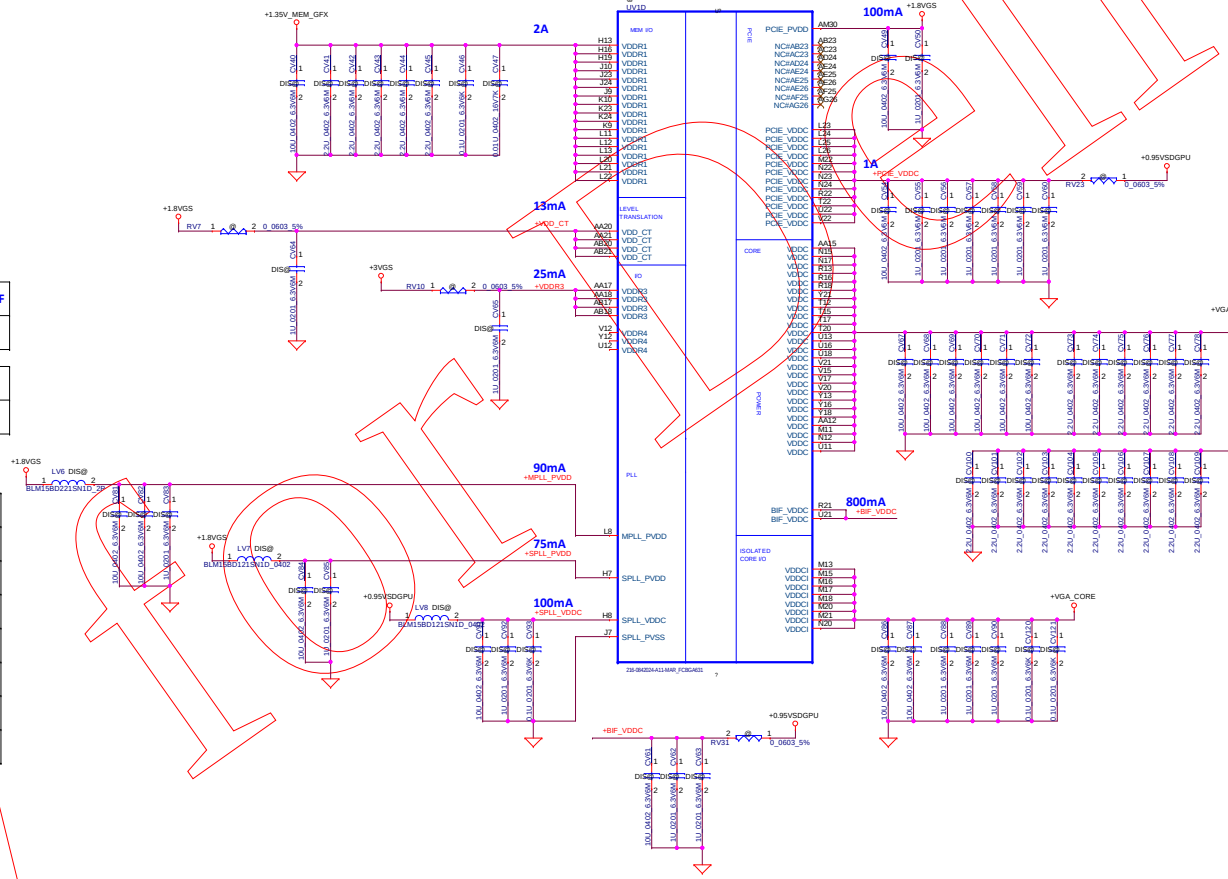

Only for Reference

Security Classification	Compal Secret Data		
Issued Date	2019/06/20	Deciphered Date	2020/06/30

THIS SHEET OF ENGINEERING DRAWING IS THE PROPRIETARY PROPERTY OF COMPAL ELECTRONICS, INC. AND CONTAINS CONFIDENTIAL AND TRADE SECRET INFORMATION. THIS SHEET MAY NOT BE TRANSFERRED FROM THE CUSTODY OF THE COMPETENT DIVISION OF R&D DEPARTMENT EXCEPT AS AUTHORIZED BY COMPAL ELECTRONICS, INC. NEITHER THIS SHEET NOR THE INFORMATION IT CONTAINS MAY BE USED BY OR DISCLOSED TO ANY THIRD PARTY WITHOUT PRIOR WRITTEN CONSENT OF COMPAL ELECTRONICS, INC.

Compal Electronics, Inc.

Title: MESO_(4/5)_Power

Size: Custom | Document Number: LA-G716P | Rev: 1.0

Date: Thursday, June 20, 2019 | Sheet 29 of 101

Power-Up/Down Sequence

1. All the ASIC supplies must reach their respective nominal voltages within 20 ms of the start of the ramp-up sequence, though a shorter ramp-up duration is preferred. The maximum slew rate on all rails is 50 mV/µ s
2. It is recommended that the 3.3-V rail ramp up first.
3. It is recommended that the 0.95-V rail reach at least 90% of its nominal value no later than 2 ms from the start of VDDC ramping up.
4. The power rails that are shared with other components on the system should be gated for the dGPU so that when the dGPU is powered down (for example AMD PowerXpress? idle state), all the power rails are removed from the dGPU. The gate circuits must meet the slew rate requirement (such as ? 50 mV/µ s).
5. VDDC and VDD_CT should not ramp up simultaneously. For example, VDDC should reach 90% before VDD_CT starts to ramp up (or vice versa).
6. For power down, reversing the ramp-up sequence is recommended.

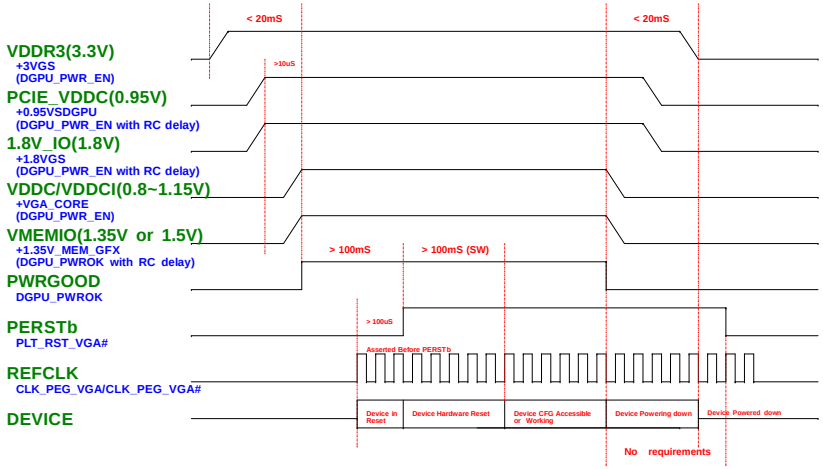

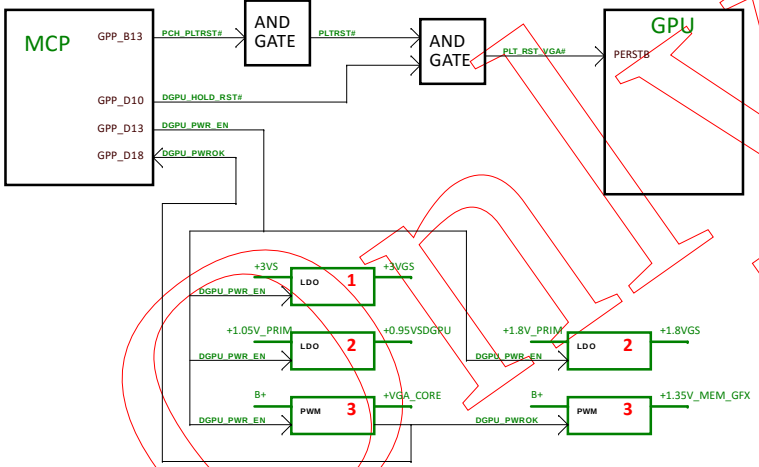

Samsung 2G

UV13 SA00009TA2L S8_R1@ S IC D5 256M32 K4G80325FC-HC25 FBGA 170P	UV15 SA00009TA2L S8_R1@ S IC D5 256M32 K4G80325FC-HC25 FBGA 170P
UV13 SA00009TA3L S8_R3@ S IC D5 256M32 K4G80325FC-HC25 FBGA 170P A31 !	UV15 SA00009TA3L S8_R3@ S IC D5 256M32 K4G80325FC-HC25 FBGA 170P A31 !

Hynix 2G

UV13 SA0000C170L H8_R1@ S IC D5 256M32 H5GC8H24AJR-R2C BGA 170P	UV15 SA0000C170L H8_R1@ S IC D5 256M32 H5GC8H24AJR-R2C BGA 170P
UV13 SA0000C171L H8_R3@ S IC D5 256M32 H5GC8H24AJR-R2C BGA A31!	UV15 SA0000C171L H8_R3@ S IC D5 256M32 H5GC8H24AJR-R2C BGA A31!

Micron 2G

UV13 SA00009TI2L M8_R1@ S IC D5 256M32 MT51J256M32HF-80:B FBGA	UV15 SA00009TI2L M8_R1@ S IC D5 256M32 MT51J256M32HF-80:B FBGA
UV13 SA00009TI3L M8_R3@ S IC D5 256M32 MT51J256M32HF-80:B A31!	UV15 SA00009TI3L M8_R3@ S IC D5 256M32 MT51J256M32HF-80:B A31!

Samsung 2G	Hynix 2G	Micron 2G
RV16 2G_S@ 4.75K_0402_1% SD034475180	RV15 2G_H@ 3.4K_0402_1% SD034340180; RV16 2G_H@ 10K_0402_1% SD034100280	RV15 2G_M@ 4.75K_0402_1% SD034475180

Table 3–21 Resistor Divider Lookup T

R_pu (Ω)	R_pd (Ω)	Bits [3:1]
NC	4750	000
8450	2000	001
4530	2000	010
6980	4990	011
4530	4990	100
3240	5620	101
3400	10000	110
4750	NC	111

Note: 0402 1% resistors are required.

For AMD R17M-M1-30 VRAM

Memory ID	8Gb R3 P/N	Vendor	Configuratio	Size
000	SA00009TA3L	SAMSUNG	S IC D5 256M32 K4G80325FC-HC25 FBGA 170P A31 !	2GB
110	SA0000C171L	Hynix	S IC D5 256M32 H5GC8H24AJR-R2C BGA A31!	2GB
111	SA00009TI3L	Micron	S IC D5 256M32 MT51J256M32HF-80:B A31!	2GB

Dell Confidential

Security Classification	Compal Secret Data		
Issued Date	2019/06/20	Deciphered Date	2020/06/30

THIS SHEET OF ENGINEERING DRAWING IS THE PROPRIETARY PROPERTY OF COMPAL ELECTRONICS, INC. AND CONTAINS CONFIDENTIAL AND TRADE SECRET INFORMATION. THIS SHEET MAY NOT BE TRANSFERED FROM THE CUSTODY OF THE COMPETENT DIVISION OF R&D DEPARTMENT EXCEPT AS AUTHORIZED BY COMPAL ELECTRONICS, INC. NEITHER THIS SHEET NOR THE INFORMATION IT CONTAINS MAY BE USED BY OR DISCLOSED TO ANY THIRD PARTY WITHOUT PRIOR WRITTEN CONSENT OF COMPAL ELECTRONICS, INC.

Compal Electronics, Inc.

Title: MESO_Note

Size: | Document Number: LA-G716P | Rev: 1.0

Date: Thursday, June 20, 2019 | Sheet 30 of 101

Main Func = GPU

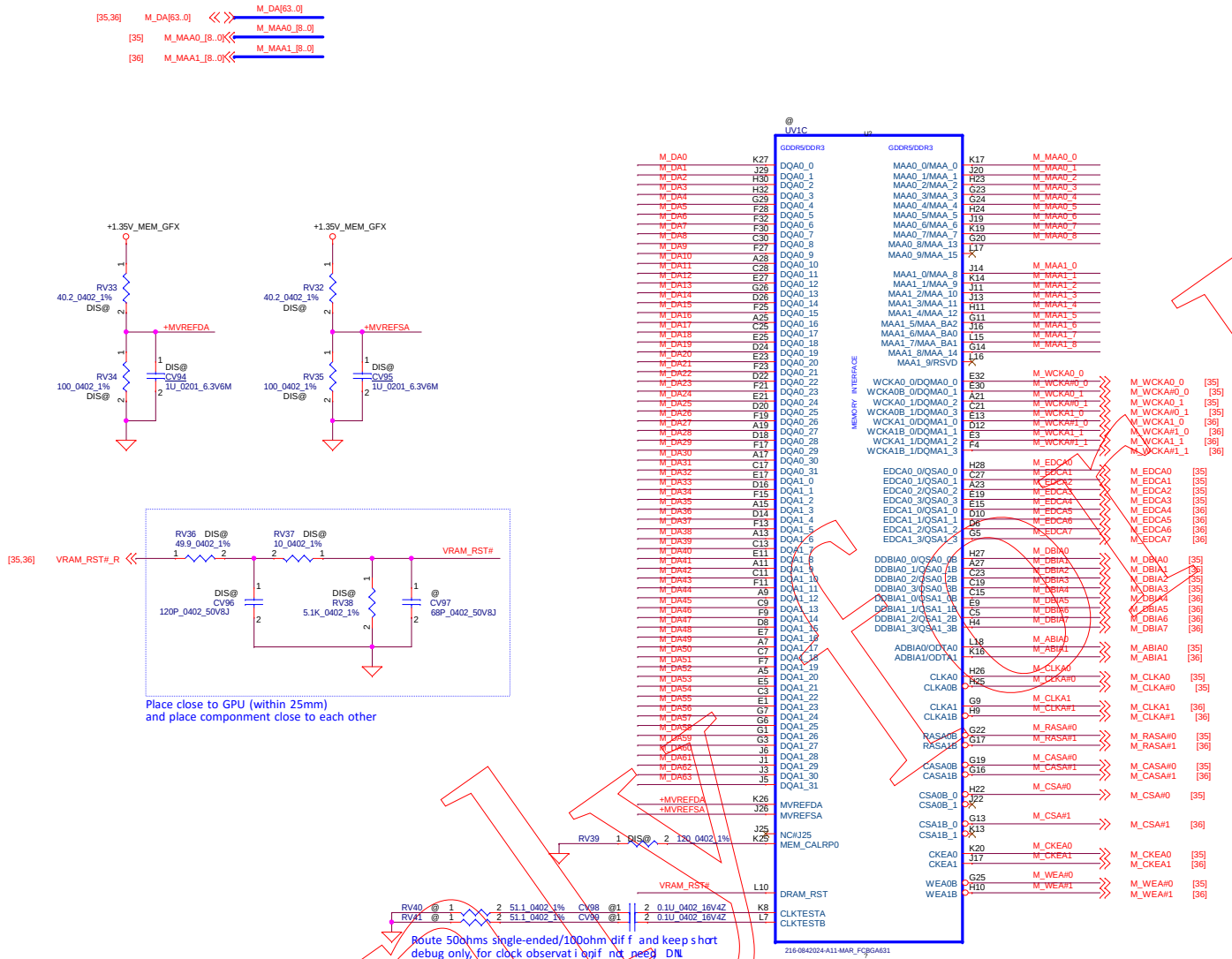

Security Classification	Compal Secret Data		
Issued Date	2019/06/20	Deciphered Date	2020/06/30

THIS SHEET OF ENGINEERING DRAWING IS THE PROPRIETARY PROPERTY OF COMPAL ELECTRONICS, INC. AND CONTAINS CONFIDENTIAL AND TRADE SECRET INFORMATION. THIS SHEET MAY NOT BE TRANSFERED FROM THE CUSTODY OF THE COMPETENT DIVISION OF R&D DEPARTMENT EXCEPT AS AUTHORIZED BY COMPAL ELECTRONICS, INC. NEITHER THIS SHEET NOR THE INFORMATION IT CONTAINS MAY BE USED BY OR DISCLOSED TO ANY THIRD PARTY WITHOUT PRIOR WRITTEN CONSENT OF COMPAL ELECTRONICS, INC.

Compal Electronics, Inc.

Title: **MESO_(5/5)_MEM**

Size | Document Number: **LA-G716P** | Rev: 1.0

Date: Thursday, June 20, 2019 | Sheet 31 of 101

Main Function:

Reserve

Only for Dell

Security Classification	Compal Secret Data		
Issued Date	2019/06/20	Deciphered Date	2020/06/30

THIS SHEET OF ENGINEERING DRAWING IS THE PROPRIETARY PROPERTY OF COMPAL ELECTRONICS, INC. AND CONTAINS CONFIDENTIAL AND TRADE SECRET INFORMATION. THIS SHEET MAY NOT BE TRANSFERED FROM THE CUSTODY OF THE COMPETENT DIVISION OF R&D DEPARTMENT EXCEPT AS AUTHORIZED BY COMPAL ELECTRONICS, INC. NEITHER THIS SHEET NOR THE INFORMATION IT CONTAINS MAY BE USED BY OR DISCLOSED TO ANY THIRD PARTY WITHOUT PRIOR WRITTEN CONSENT OF COMPAL ELECTRONICS, INC.

Compal Electronics, Inc.

Title: (RSVD)

Size: | Document Number: LA-G716P | Rev: 1.0

Date: Thursday, June 20, 2019 | Sheet 32 of 101

Main Function:

Reserve

Only for Dell

Security Classification	Compal Secret Data		
Issued Date	2019/06/20	Deciphered Date	2020/06/30

THIS SHEET OF ENGINEERING DRAWING IS THE PROPRIETARY PROPERTY OF COMPAL ELECTRONICS, INC. AND CONTAINS CONFIDENTIAL AND TRADE SECRET INFORMATION. THIS SHEET MAY NOT BE TRANSFERED FROM THE CUSTODY OF THE COMPETENT DIVISION OF R&D DEPARTMENT EXCEPT AS AUTHORIZED BY COMPAL ELECTRONICS, INC. NEITHER THIS SHEET NOR THE INFORMATION IT CONTAINS MAY BE USED BY OR DISCLOSED TO ANY THIRD PARTY WITHOUT PRIOR WRITTEN CONSENT OF COMPAL ELECTRONICS, INC.

Compal Electronics, Inc.

Title: (RSVD)

Size: | Document Number: LA-G716P | Rev: 1.0

Date: Thursday, June 20, 2019 | Sheet 33 of 101

Main Function:

Reserve

Only for Dell

Security Classification	Compal Secret Data		
Issued Date	2019/06/20	Deciphered Date	2020/06/30

THIS SHEET OF ENGINEERING DRAWING IS THE PROPRIETARY PROPERTY OF COMPAL ELECTRONICS, INC. AND CONTAINS CONFIDENTIAL AND TRADE SECRET INFORMATION. THIS SHEET MAY NOT BE TRANSFERED FROM THE CUSTODY OF THE COMPETENT DIVISION OF R&D DEPARTMENT EXCEPT AS AUTHORIZED BY COMPAL ELECTRONICS, INC. NEITHER THIS SHEET NOR THE INFORMATION IT CONTAINS MAY BE USED BY OR DISCLOSED TO ANY THIRD PARTY WITHOUT PRIOR WRITTEN CONSENT OF COMPAL ELECTRONICS, INC.

Compal Electronics, Inc.

Title: (RSVD)

Size: | Document Number: LA-G716P | Rev: 1.0

Date: Thursday, June 20, 2019 | Sheet 34 of 101

Main Func = GDDR5

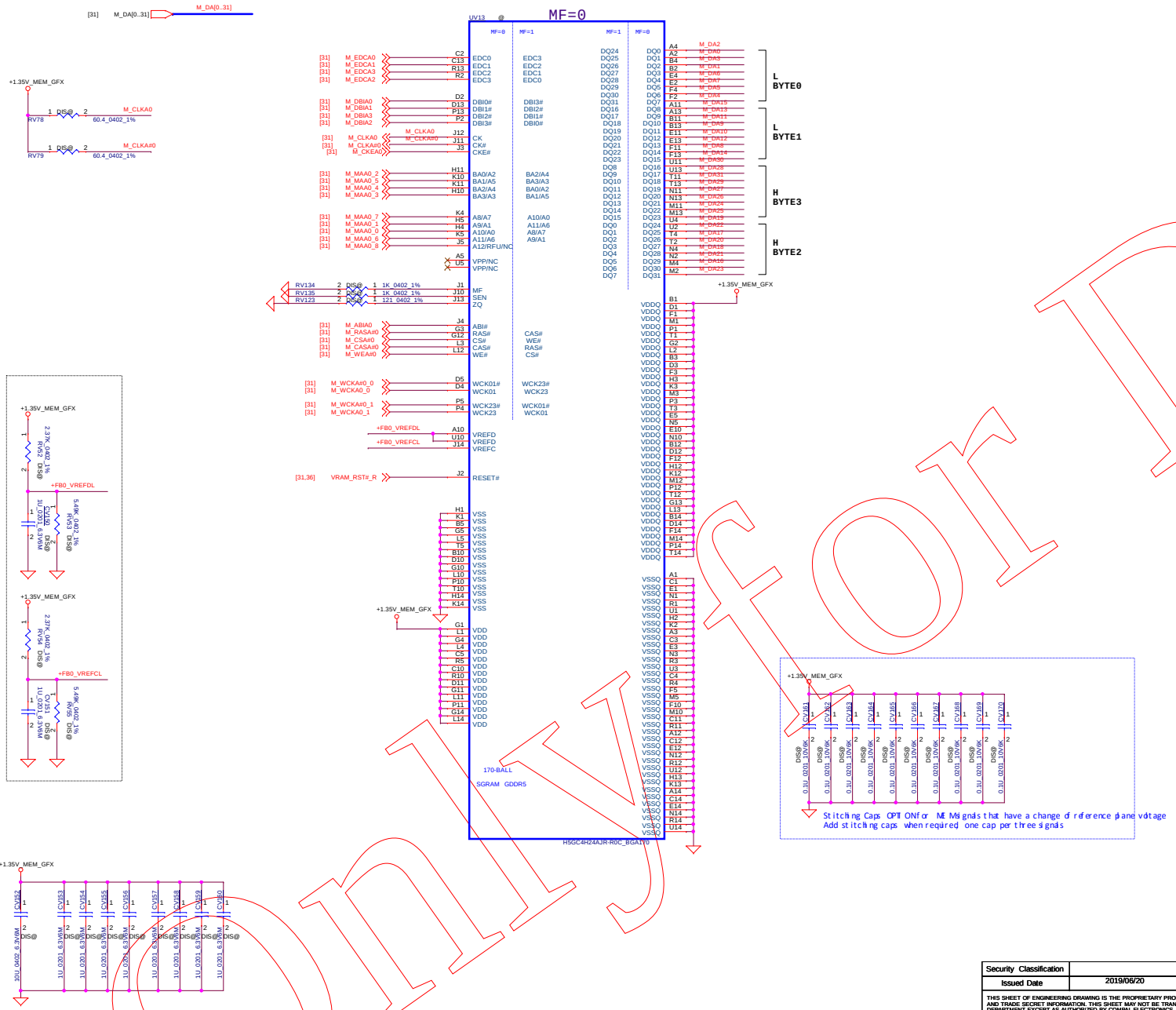

Only for Dell

Security Classification	Compal Secret Data		
Issued Date	2019/06/20	Deciphered Date	2020/06/30

THIS SHEET OF ENGINEERING DRAWING IS THE PROPRIETARY PROPERTY OF COMPAL ELECTRONICS, INC. AND CONTAINS CONFIDENTIAL AND TRADE SECRET INFORMATION. THIS SHEET MAY NOT BE TRANSFERED FROM THE CUSTODY OF THE COMPETENT DIVISION OF R&D DEPARTMENT EXCEPT AS AUTHORIZED BY COMPAL ELECTRONICS, INC. NEITHER THIS SHEET NOR THE INFORMATION IT CONTAINS MAY BE USED BY OR DISCLOSED TO ANY THIRD PARTY WITHOUT PRIOR WRITTEN CONSENT OF COMPAL ELECTRONICS, INC.

Compal Electronics, Inc.

Title: **MESO_GDDR5_A0**

Size: | Document Number: **LA-G716P** | Rev: 1.0

Date: Thursday, June 20, 2019 | Sheet 35 of 101

Main Func = GDDR5

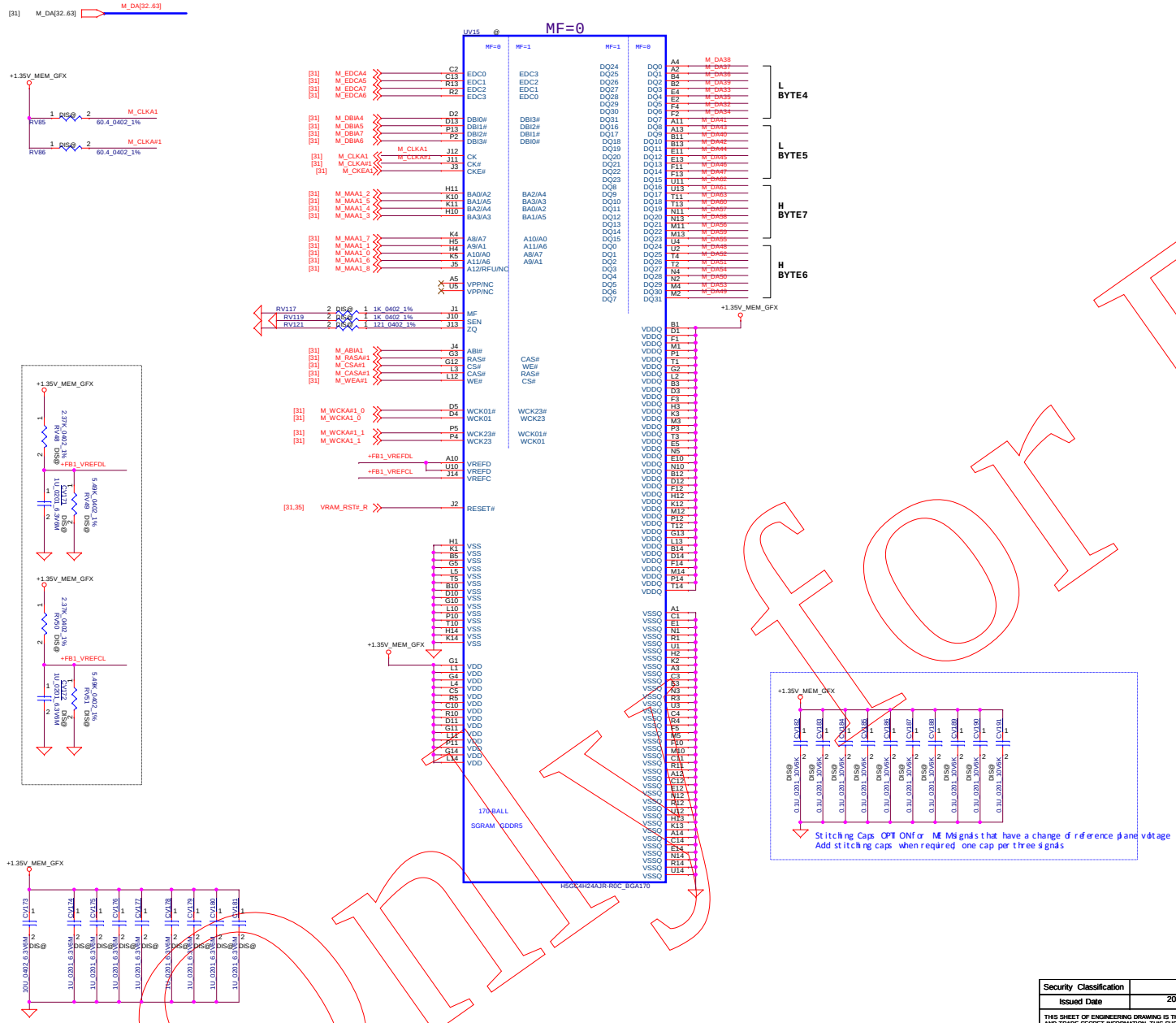

Only for Dell

Security Classification	Compal Secret Data		
Issued Date	2019/06/20	Deciphered Date	2020/06/30

THIS SHEET OF ENGINEERING DRAWING IS THE PROPRIETARY PROPERTY OF COMPAL ELECTRONICS, INC. AND CONTAINS CONFIDENTIAL AND TRADE SECRET INFORMATION. THIS SHEET MAY NOT BE TRANSFERRED FROM THE CUSTODY OF THE COMPETENT DIVISION OF R&D DEPARTMENT EXCEPT AS AUTHORIZED BY COMPAL ELECTRONICS, INC. NEITHER THIS SHEET NOR THE INFORMATION IT CONTAINS MAY BE USED BY OR DISCLOSED TO ANY THIRD PARTY WITHOUT PRIOR WRITTEN CONSENT OF COMPAL ELECTRONICS, INC.

Compal Electronics, Inc.

Title: MESO_GDDR5_A1

Size | Document Number: LA-G716P | Rev: 1.0

Date: Thursday, June 20, 2019 | Sheet 36 of 101

Main Func = GPU

+3V/+0.95V/+1.8V for GPU

Maximum Output Current 4A

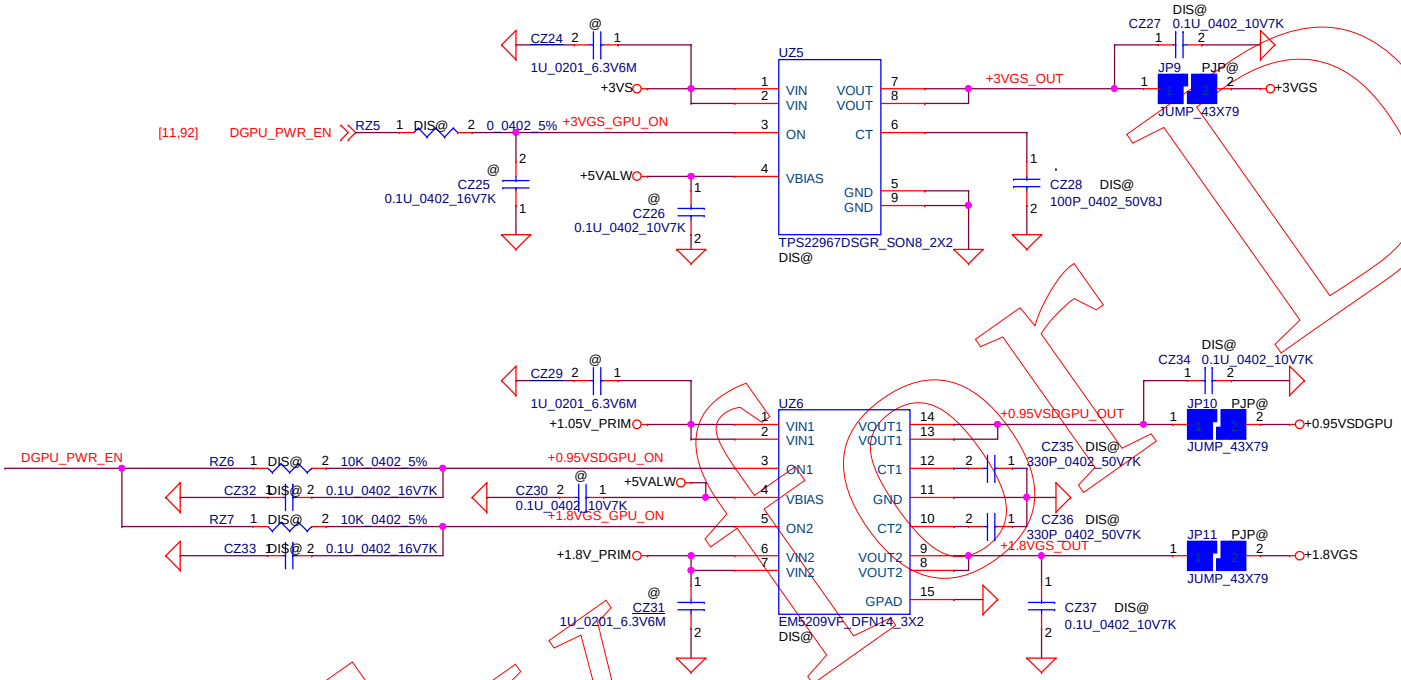

25mA
JP9
Always Short

1900mA
JP10
Always Short

331mA
JP11
Always Short

Maximum Output Current 6A

Only for Dell

Security Classification	Compal Secret Data		
Issued Date	2019/06/20	Deciphered Date	2020/06/30

THIS SHEET OF ENGINEERING DRAWING IS THE PROPRIETARY PROPERTY OF COMPAL ELECTRONICS, INC. AND CONTAINS CONFIDENTIAL AND TRADE SECRET INFORMATION. THIS SHEET MAY NOT BE TRANSFERED FROM THE CUSTODY OF THE COMPETENT DIVISION OF R&D DEPARTMENT EXCEPT AS AUTHORIZED BY COMPAL ELECTRONICS, INC. NEITHER THIS SHEET NOR THE INFORMATION IT CONTAINS MAY BE USED BY OR DISCLOSED TO ANY THIRD PARTY WITHOUT PRIOR WRITTEN CONSENT OF COMPAL ELECTRONICS, INC.

Compal Electronics, Inc.

Title: **GPU Power**

Size: | Document Number: **LA-G716P** | Rev: 1.0

Date: Thursday, June 20, 2019 | Sheet 37 of 101

Main Func = LCD

Pin 5,6,9 Cable side NC
Pin 4 for 17" CAMERA

JEDP1 CONN@
ACES_51540-04001-P01
SP010029F00

+DCBAT_LCD
CAM_DET#_R R96 @ 0_0201_5%
R96 close JEDP! @ 08/15
+LCDVDD_LCD
CAM_DET#
60 mils
RF@
C7 0.1U_0402_16V7K
C8 1U_0402_16V7K
C9 4.7U_0402_50V6M

LCD_TST_C
DBC_PANEL_EN_R
EDP_HPD [6]
LCD_CBL_DET# [9]
EDP_AUXP_C
EDP_AUXN_C
EDP_TXN0_C
EDP_TXP0_C
EDP_TXN1_C
EDP_TXP1_C
TOUCH_SCREEN_INT# [6]
TOUCH_SCREEN_RST [6]
+MIC_VCC
LCD_BRIGHTNESS
BLON_OUT_C
+3VS_CAM
DMIC_DATA_EDP [56]
DMIC_CLK_EDP [56]
USB20_N6_R
USB20_P6_R
USB20_N8_R
USB20_P8_R
TS_EN
+TS_VDD

INVERTER POWER

+19VB F1 1.5A_24V_SMD1812P150TF-24 [11] +DCBAT_LCD
60 mils
C5 @ 0.1U_0402_50V7K
C6 1000P_0402_50V7K
+LCDVDD_LCD R8 0_0603_5% +LCDVDD

EE note: Never change R8 to short pad after MP

R75 100K_0402_5%
R76 100K_0402_5%
R77 100K_0402_5%
BKLT_CTRL
BLON_OUT_C
EDP_HPD

DMIC_CLK_EDP
DMIC_DATA_EDP
ED4 @ESD@ L03ESDL5V0CG3-2_SOT-523-3

BLON_OUT_C
LCD_BRIGHTNESS
LCD_TST_C
R78 100_0402_5%
R79 100_0402_5%
R80 100_0402_5%
BKLT_CTRL
LCD_TST
PANEL_BKEN_EC [58]
R11 @ 0_0201_5%
D2 BAT54C_SOT23-3-D
Brightness
EDP_BKLT_CTRL [6]
LCD_TST
LCD_TST [58]
EC (BIST MODE)

[11] DBC_PANEL_EN R13 @ 0_0201_5% DBC_PANEL_EN_R
[6] EDP_TXN0 C12 0.1U_0402_16V7K EDP_TXN0_C
[6] EDP_TXP0 C13 0.1U_0402_16V7K EDP_TXP0_C
[6] EDP_TXN1 C14 0.1U_0402_16V7K EDP_TXN1_C
[6] EDP_TXP1 C15 0.1U_0402_16V7K EDP_TXP1_C
[6] EDP_AUXN C17 0.1U_0402_16V7K EDP_AUXN_C
[6] EDP_AUXP C19 0.1U_0402_16V7K EDP_AUXP_C

+3VS
C16 1U_0201_6.3V6M
U1 SY6288C20AAC_SOT23-5 IN OUT GND EN OC
40mil
+LCDVDD
R15 10K_0402_5%
+3VS
[6] EDP_VDD_EN
D4 BAT54C_SOT23-3-D
LCDVDD_EN
[58] LCD_VCC_TEST_EN
EC (BIST MODE)
R17 100K_0402_5%
High Active

I2C Touch Screen (Reserved)

Close to JEDP1

[11] I2C_1_SDA
[11] I2C_1_SCL
TS_I2C@
R84 TS_I2C@ 0_0201_5%
R85 0_0201_5%
USB20_N8_R
USB20_P8_R
+3VS
R86 TS_I2C@ 4.7K_0402_5%
R87 TS_I2C@ 4.7K_0402_5%
R88 10K_0402_5%
I2C_1_SDA
I2C_1_SCL
TOUCH_SCREEN_RST
+3VS
R90 @ 10K_0402_5%
LCD_CBL_DET#

Main Func = CAM&MIC, TS

+3VS R95 S FUSE T0603FF1000TM 1A 65V UL FAST +3VS_CAM
+MIC_VCC R83 @ 0_0402_5%
C39 @ 1U_0201_6V3M
C36 0.1U_0402_10V7K
C36: colse to JEDP1.29

+TS_VDD_IN R87 0_0603_5% +TS_VDD

Change TouchScreen PWR path
Jason 2019-06-18
+TS_VDD_IN
TS_USB@
+5VS R81 TS_I2C@ 0_0603_5%
+3VS R82 0_0603_5%
C35 @ 1U_0201_6V3M
20 mils
U2 @ SY6288C20AAC_SOT23-5 IN OUT GND EN OC
20mil
+TS_VDD
C37 @ 1U_0201_6V3M
[11] PCH_3.3V_TS_EN
R72 @ 100K_0402_5%

[58,77] LID_CL_SIO#
D3 RB551V-30_SOD323-2
TOUCH_SCREEN
TS_EN
R14 33_0402_5%
C18 @ 10P_0402_50V8J
TOUCH_SCREEN_PD# [6]

USB20_N8_R
USB20_P8_R
ED2 @ESD@ L03ESDL5V0CG3-2_SOT-523-3
TS_USB@
R18 0_0402_5%
L4 @EMI@ MCM1012B900F06BP_4P
USB20_P8_R
USB20_N8_R
USB20_P8_RR [43]
USB20_N8_RR [43]
R19 0_0402_5%

USB20_P6_R
USB20_N6_R
ED3 @ESD@ L03ESDL5V0CG3-2_SOT-523-3
R10 @EMI@ 0_0402_5%
L3 EMI@ MCM1012B900F06BP_4P
USB20_P6_R
USB20_N6_R
USB20_P6 [12]
USB20_N6 [12]
R12 @EMI@ 0_0402_5%

Only for reference

Security Classification	Compal Secret Data		
Issued Date	2019/06/20	Deciphered Date	2020/06/30

THIS SHEET OF ENGINEERING DRAWING IS THE PROPRIETARY PROPERTY OF COMPAL ELECTRONICS, INC. AND CONTAINS CONFIDENTIAL AND TRADE SECRET INFORMATION. THIS SHEET MAY NOT BE TRANSFERED FROM THE CUSTODY OF THE COMPETENT DIVISION OF R&D DEPARTMENT EXCEPT AS AUTHORIZED BY COMPAL ELECTRONICS, INC. NEITHER THIS SHEET NOR THE INFORMATION IT CONTAINS MAY BE USED BY OR DISCLOSED TO ANY THIRD PARTY WITHOUT PRIOR WRITTEN CONSENT OF COMPAL ELECTRONICS, INC.

Compal Electronics, Inc.
Title: LCD/Cam/MIC/T.Panel
Size: Document Number: LA-G716P
Rev: 1.0
Date: Thursday, June 20, 2019 Sheet 38 of 101

Main Function:

Reserve

Only for Dell

Security Classification	Compal Secret Data		
Issued Date	2019/06/20	Deciphered Date	2020/06/30

THIS SHEET OF ENGINEERING DRAWING IS THE PROPRIETARY PROPERTY OF COMPAL ELECTRONICS, INC. AND CONTAINS CONFIDENTIAL AND TRADE SECRET INFORMATION. THIS SHEET MAY NOT BE TRANSFERED FROM THE CUSTODY OF THE COMPETENT DIVISION OF R&D DEPARTMENT EXCEPT AS AUTHORIZED BY COMPAL ELECTRONICS, INC. NEITHER THIS SHEET NOR THE INFORMATION IT CONTAINS MAY BE USED BY OR DISCLOSED TO ANY THIRD PARTY WITHOUT PRIOR WRITTEN CONSENT OF COMPAL ELECTRONICS, INC.

Compal Electronics, Inc.

Title: (RSVD)

Size: | Document Number: LA-G716P | Rev: 1.0

Date: Thursday, June 20, 2019 | Sheet 39 of 101

Main Func = HDMI

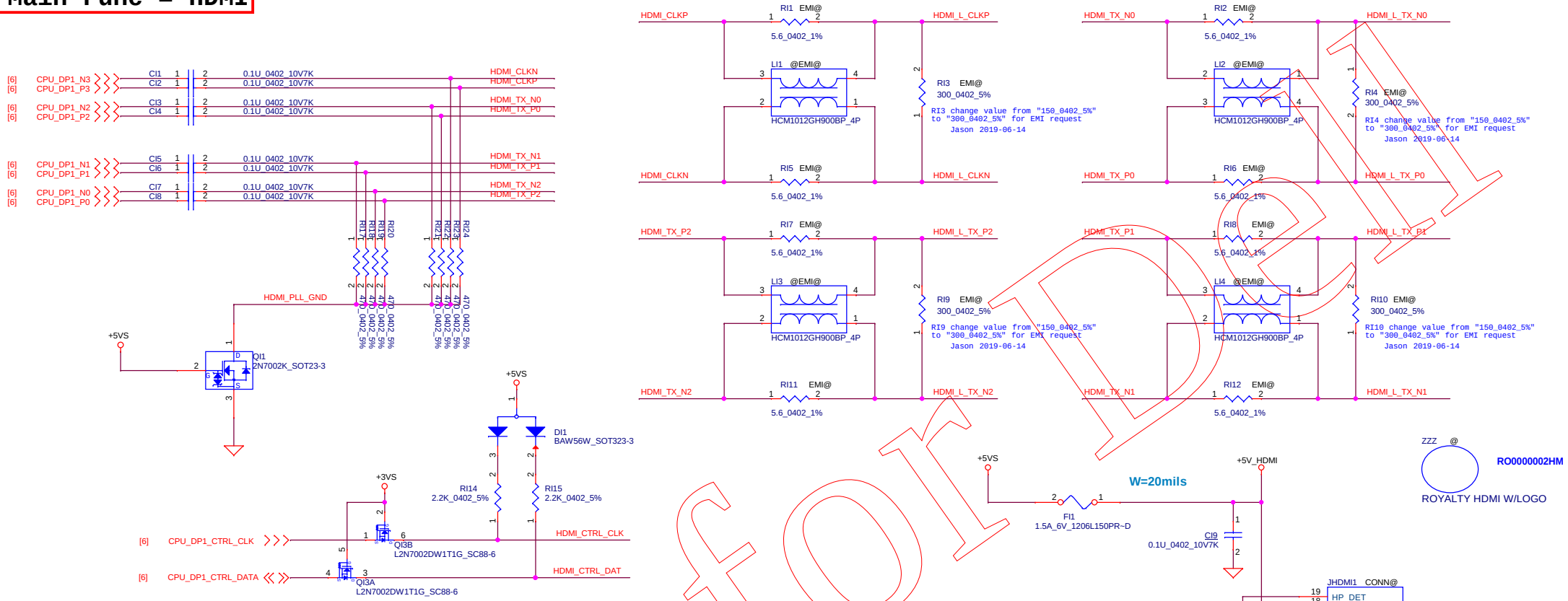

Main Func = VGA

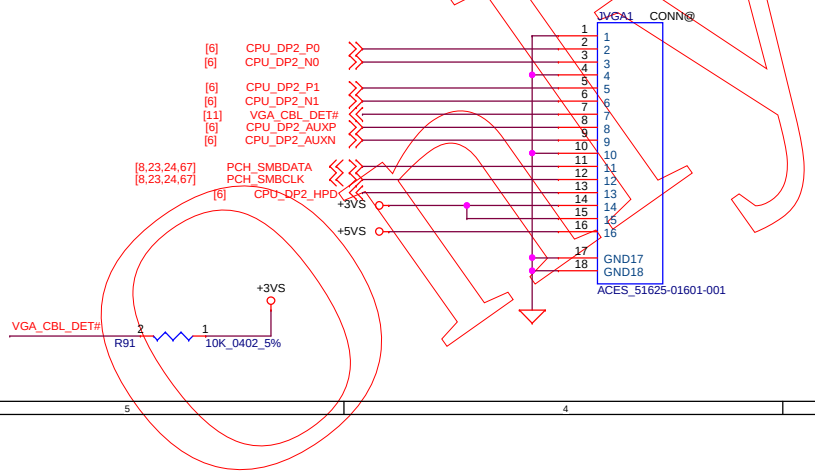

Security Classification	Compal Secret Data		
Issued Date	2019/06/20	Deciphered Date	2020/06/30

THIS SHEET OF ENGINEERING DRAWING IS THE PROPRIETARY PROPERTY OF COMPAL ELECTRONICS, INC. AND CONTAINS CONFIDENTIAL AND TRADE SECRET INFORMATION. THIS SHEET MAY NOT BE TRANSFERED FROM THE CUSTODY OF THE COMPETENT DIVISION OF R&D DEPARTMENT EXCEPT AS AUTHORIZED BY COMPAL ELECTRONICS, INC. NEITHER THIS SHEET NOR THE INFORMATION IT CONTAINS MAY BE USED BY OR DISCLOSED TO ANY THIRD PARTY WITHOUT PRIOR WRITTEN CONSENT OF COMPAL ELECTRONICS, INC.

Compal Electronics, Inc.

Title: **HDMI L.Shifter/Conn**

Size | Document Number: **LA-G716P** | Rev 1.0

Date: Thursday, June 20, 2019 | Sheet 40 of 101

Main Function:

Reserve

Only for Dell

Security Classification	Compal Secret Data		
Issued Date	2019/06/20	Deciphered Date	2020/06/30

THIS SHEET OF ENGINEERING DRAWING IS THE PROPRIETARY PROPERTY OF COMPAL ELECTRONICS, INC. AND CONTAINS CONFIDENTIAL AND TRADE SECRET INFORMATION. THIS SHEET MAY NOT BE TRANSFERED FROM THE CUSTODY OF THE COMPETENT DIVISION OF R&D DEPARTMENT EXCEPT AS AUTHORIZED BY COMPAL ELECTRONICS, INC. NEITHER THIS SHEET NOR THE INFORMATION IT CONTAINS MAY BE USED BY OR DISCLOSED TO ANY THIRD PARTY WITHOUT PRIOR WRITTEN CONSENT OF COMPAL ELECTRONICS, INC.

Compal Electronics, Inc.

Title: (RSVD)

Size: | Document Number: LA-G716P | Rev: 1.0

Date: Thursday, June 20, 2019 | Sheet 41 of 101

Only for Dell

Main Func = Typec MUX

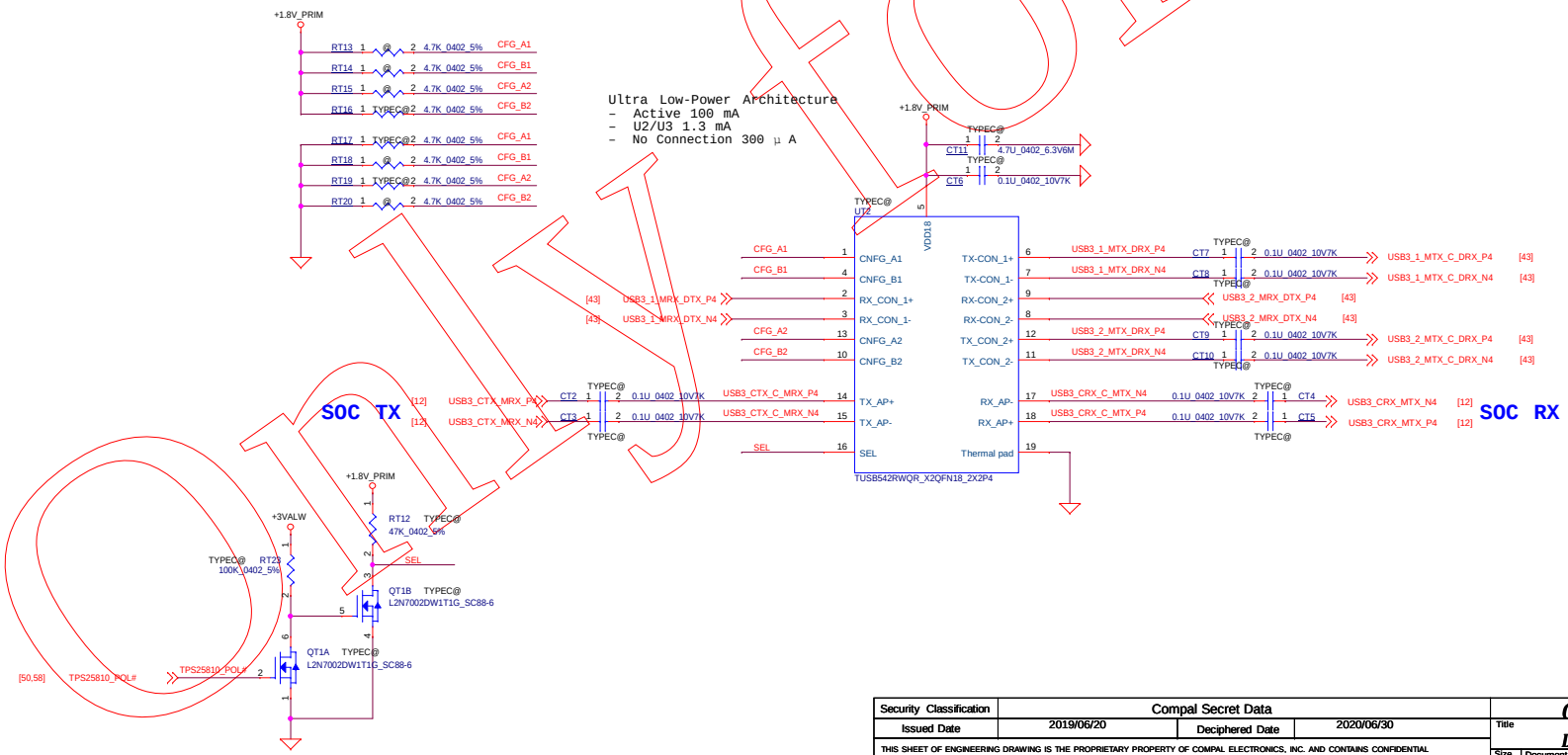

Security Classification	Compal Secret Data		
Issued Date	2019/06/20	Deciphered Date	2020/06/30

THIS SHEET OF ENGINEERING DRAWING IS THE PROPRIETARY PROPERTY OF COMPAL ELECTRONICS, INC. AND CONTAINS CONFIDENTIAL AND TRADE SECRET INFORMATION. THIS SHEET MAY NOT BE TRANSFERED FROM THE CUSTODY OF THE COMPETENT DIVISION OF R&D DEPARTMENT EXCEPT AS AUTHORIZED BY COMPAL ELECTRONICS, INC. NEITHER THIS SHEET NOR THE INFORMATION IT CONTAINS MAY BE USED BY OR DISCLOSED TO ANY THIRD PARTY WITHOUT PRIOR WRITTEN CONSENT OF COMPAL ELECTRONICS, INC.

Compal Electronics, Inc.

Title: Dual Role Mux/Power Switch

Size | Document Number: LA-G716P | Rev: 1.0

Date: Thursday, June 20, 2019 | Sheet 42 of 101

Main Func = USB2 Mux

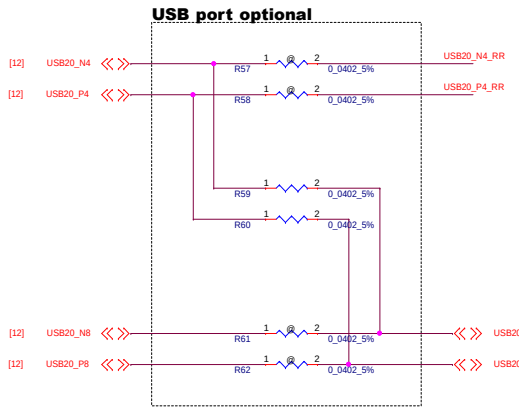

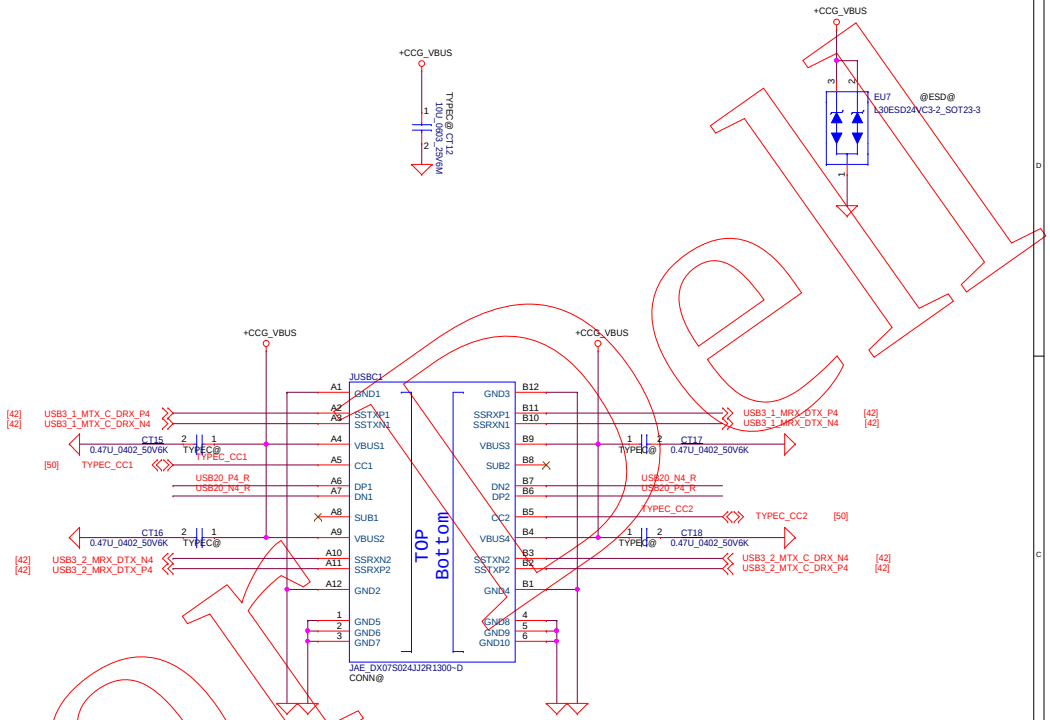

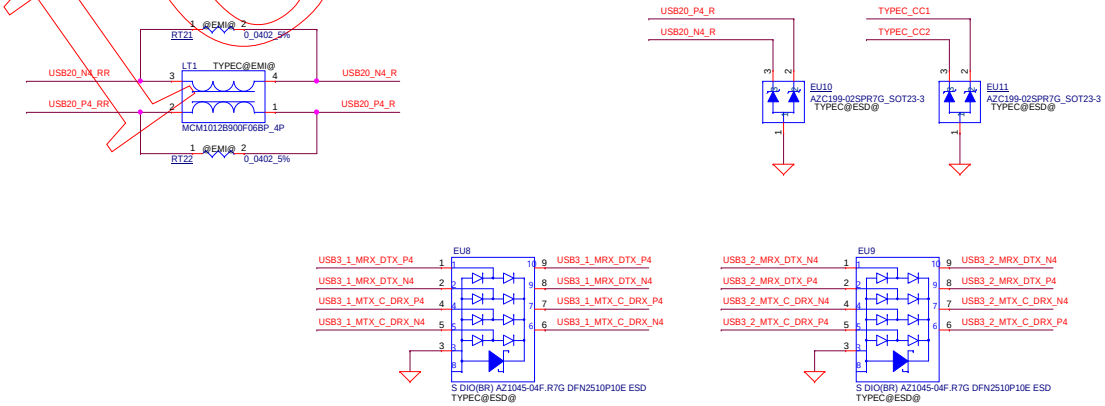

Only for Pell

Security Classification	Compal Secret Data		
Issued Date	2019/06/20	Deciphered Date	2020/06/30

THIS SHEET OF ENGINEERING DRAWING IS THE PROPRIETARY PROPERTY OF COMPAL ELECTRONICS, INC. AND CONTAINS CONFIDENTIAL AND TRADE SECRET INFORMATION. THIS SHEET MAY NOT BE TRANSFERED FROM THE CUSTODY OF THE COMPETENT DIVISION OF R&D DEPARTMENT EXCEPT AS AUTHORIZED BY COMPAL ELECTRONICS, INC. NEITHER THIS SHEET NOR THE INFORMATION IT CONTAINS MAY BE USED BY OR DISCLOSED TO ANY THIRD PARTY WITHOUT PRIOR WRITTEN CONSENT OF COMPAL ELECTRONICS, INC.

Compal Electronics, Inc.

Title: **TYPE-C**

Size | Document Number: **LA-G716P** | Rev 1.0

Date: Thursday, June 20, 2019 | Sheet 43 of 101

Main Function: TYPE-C_Port1 (1/2)

Reserve

Only for Dell

Security Classification	Compal Secret Data		
Issued Date	2019/06/20	Deciphered Date	2020/06/30

THIS SHEET OF ENGINEERING DRAWING IS THE PROPRIETARY PROPERTY OF COMPAL ELECTRONICS, INC. AND CONTAINS CONFIDENTIAL AND TRADE SECRET INFORMATION. THIS SHEET MAY NOT BE TRANSFERED FROM THE CUSTODY OF THE COMPETENT DIVISION OF R&D DEPARTMENT EXCEPT AS AUTHORIZED BY COMPAL ELECTRONICS, INC. NEITHER THIS SHEET NOR THE INFORMATION IT CONTAINS MAY BE USED BY OR DISCLOSED TO ANY THIRD PARTY WITHOUT PRIOR WRITTEN CONSENT OF COMPAL ELECTRONICS, INC.

Compal Electronics, Inc.

Title: TYPE-C_Port1 (1/2)(RSVD)

Size: | Document Number: LA-G716P | Rev: 1.0

Date: Thursday, June 20, 2019 | Sheet 44 of 101

Main Function: TYPE-C_Port1 (2/2)

Reserve

Only for Dell

Security Classification	Compal Secret Data		
Issued Date	2019/06/20	Deciphered Date	2020/06/30

THIS SHEET OF ENGINEERING DRAWING IS THE PROPRIETARY PROPERTY OF COMPAL ELECTRONICS, INC. AND CONTAINS CONFIDENTIAL AND TRADE SECRET INFORMATION. THIS SHEET MAY NOT BE TRANSFERED FROM THE CUSTODY OF THE COMPETENT DIVISION OF R&D DEPARTMENT EXCEPT AS AUTHORIZED BY COMPAL ELECTRONICS, INC. NEITHER THIS SHEET NOR THE INFORMATION IT CONTAINS MAY BE USED BY OR DISCLOSED TO ANY THIRD PARTY WITHOUT PRIOR WRITTEN CONSENT OF COMPAL ELECTRONICS, INC.

Compal Electronics, Inc.

Title: TYPE-C_Port1 (2/2)(RSVD)

Size: | Document Number: LA-G716P | Rev: 1.0

Date: Thursday, June 20, 2019 | Sheet 45 of 101

Main Function: TYPE-C_Port2 (1/2)

Reserve

Only for Dell

Security Classification	Compal Secret Data		
Issued Date	2019/06/20	Deciphered Date	2020/06/30

THIS SHEET OF ENGINEERING DRAWING IS THE PROPRIETARY PROPERTY OF COMPAL ELECTRONICS, INC. AND CONTAINS CONFIDENTIAL AND TRADE SECRET INFORMATION. THIS SHEET MAY NOT BE TRANSFERED FROM THE CUSTODY OF THE COMPETENT DIVISION OF R&D DEPARTMENT EXCEPT AS AUTHORIZED BY COMPAL ELECTRONICS, INC. NEITHER THIS SHEET NOR THE INFORMATION IT CONTAINS MAY BE USED BY OR DISCLOSED TO ANY THIRD PARTY WITHOUT PRIOR WRITTEN CONSENT OF COMPAL ELECTRONICS, INC.

Compal Electronics, Inc.

Title: TYPE-C_Port2 (1/2)(RSVD)

Size: | Document Number: LA-G716P | Rev: 1.0

Date: Thursday, June 20, 2019 | Sheet 46 of 101

Main Function: TYPE-C_Port2 (2/2)

Reserve

Only for Dell

Security Classification	Compal Secret Data		
Issued Date	2019/06/20	Deciphered Date	2020/06/30

THIS SHEET OF ENGINEERING DRAWING IS THE PROPRIETARY PROPERTY OF COMPAL ELECTRONICS, INC. AND CONTAINS CONFIDENTIAL AND TRADE SECRET INFORMATION. THIS SHEET MAY NOT BE TRANSFERED FROM THE CUSTODY OF THE COMPETENT DIVISION OF R&D DEPARTMENT EXCEPT AS AUTHORIZED BY COMPAL ELECTRONICS, INC. NEITHER THIS SHEET NOR THE INFORMATION IT CONTAINS MAY BE USED BY OR DISCLOSED TO ANY THIRD PARTY WITHOUT PRIOR WRITTEN CONSENT OF COMPAL ELECTRONICS, INC.

Compal Electronics, Inc.

Title: TYPE-C_Port2 (2/2)(RSVD

Size: | Document Number: LA-G716P | Rev: 1.0

Date: Thursday, June 20, 2019 | Sheet 47 of 101

Main Function: TYPE-C_Port3 (1/2)

Reserve

Only for Dell

Security Classification	Compal Secret Data		
Issued Date	2019/06/20	Deciphered Date	2020/06/30

THIS SHEET OF ENGINEERING DRAWING IS THE PROPRIETARY PROPERTY OF COMPAL ELECTRONICS, INC. AND CONTAINS CONFIDENTIAL AND TRADE SECRET INFORMATION. THIS SHEET MAY NOT BE TRANSFERED FROM THE CUSTODY OF THE COMPETENT DIVISION OF R&D DEPARTMENT EXCEPT AS AUTHORIZED BY COMPAL ELECTRONICS, INC. NEITHER THIS SHEET NOR THE INFORMATION IT CONTAINS MAY BE USED BY OR DISCLOSED TO ANY THIRD PARTY WITHOUT PRIOR WRITTEN CONSENT OF COMPAL ELECTRONICS, INC.

Compal Electronics, Inc.

Title: TYPE-C Port3 (1/2)(RSVD)

Size: | Document Number: LA-G716P | Rev: 1.0

Date: Thursday, June 20, 2019 | Sheet 48 of 101

Main Function: TYPE-C_Port3 (2/2)

Reserve

Only for Dell

Security Classification	Compal Secret Data		
Issued Date	2019/06/20	Deciphered Date	2020/06/30

THIS SHEET OF ENGINEERING DRAWING IS THE PROPRIETARY PROPERTY OF COMPAL ELECTRONICS, INC. AND CONTAINS CONFIDENTIAL AND TRADE SECRET INFORMATION. THIS SHEET MAY NOT BE TRANSFERED FROM THE CUSTODY OF THE COMPETENT DIVISION OF R&D DEPARTMENT EXCEPT AS AUTHORIZED BY COMPAL ELECTRONICS, INC. NEITHER THIS SHEET NOR THE INFORMATION IT CONTAINS MAY BE USED BY OR DISCLOSED TO ANY THIRD PARTY WITHOUT PRIOR WRITTEN CONSENT OF COMPAL ELECTRONICS, INC.

Compal Electronics, Inc.

Title: TYPE-C_Port3 (2/2)(RSVD)

Size: | Document Number: LA-G716P | Rev: 1.0

Date: Thursday, June 20, 2019 | Sheet 49 of 101

Main Function: TYPE-C_Power Path

Main Func = Power Switch

5V@3A

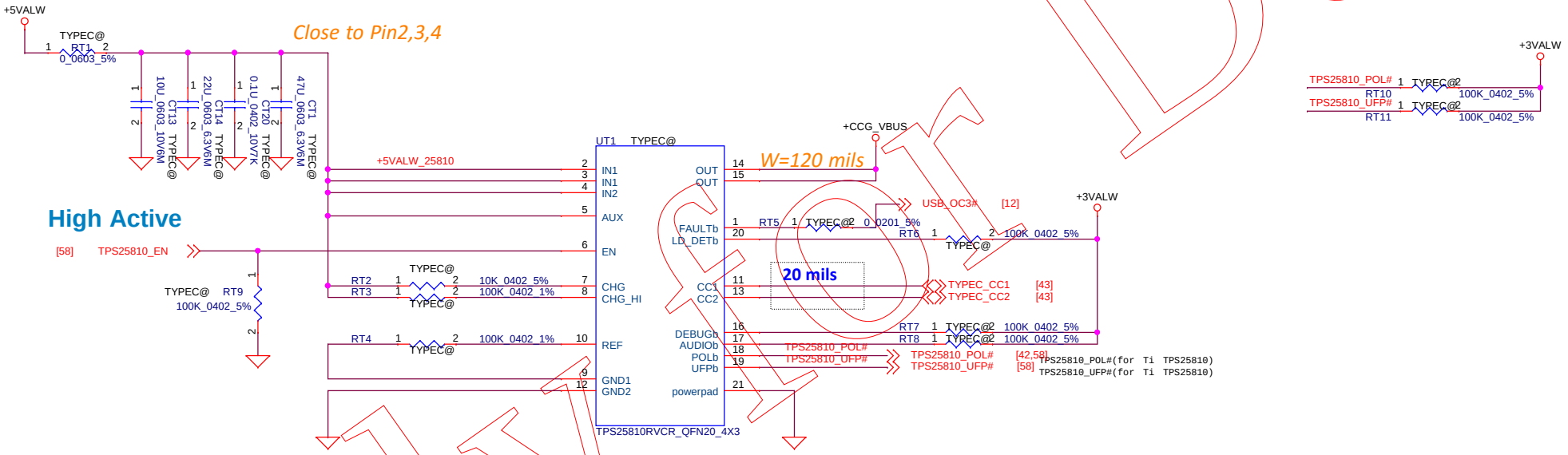

Security Classification	Compal Secret Data		
Issued Date	2019/06/20	Deciphered Date	2020/06/30

THIS SHEET OF ENGINEERING DRAWING IS THE PROPRIETARY PROPERTY OF COMPAL ELECTRONICS, INC. AND CONTAINS CONFIDENTIAL AND TRADE SECRET INFORMATION. THIS SHEET MAY NOT BE TRANSFERED FROM THE CUSTODY OF THE COMPETENT DIVISION OF R&D DEPARTMENT EXCEPT AS AUTHORIZED BY COMPAL ELECTRONICS, INC. NEITHER THIS SHEET NOR THE INFORMATION IT CONTAINS MAY BE USED BY OR DISCLOSED TO ANY THIRD PARTY WITHOUT PRIOR WRITTEN CONSENT OF COMPAL ELECTRONICS, INC.

Compal Electronics, Inc.

Title: **TYPE-C_Power Path(RSVD)**

Size: **LA-G716P** | Rev 1.0

Date: Thursday, June 20, 2019 | Sheet 50 of 101

Only for Dell

Main Func = LAN

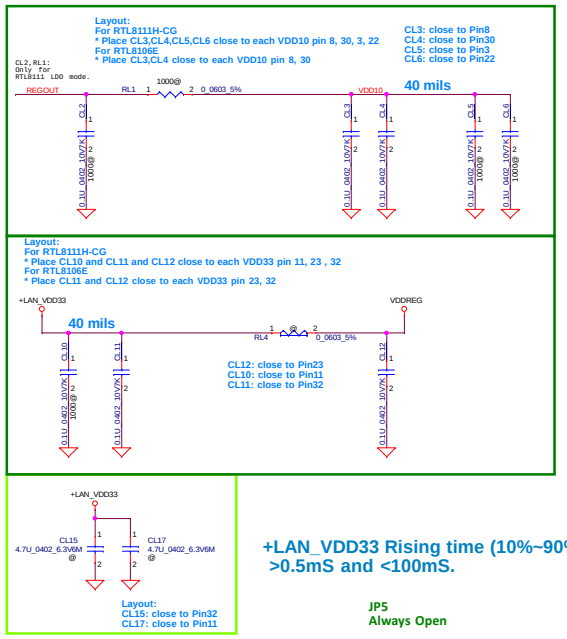

+LAN_VDD33 Rising time (10%~90%) need >0.5mS and <100mS.

JP5
Always Open

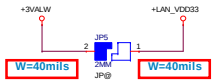

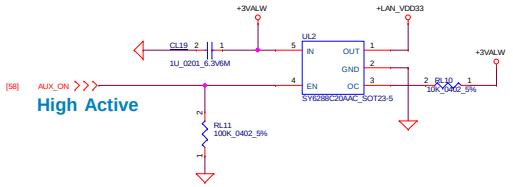

High Active

LAN CHIP 10/100/1000

RTL8111H-CG	RTL8106E-CG
SA000080P00	SA000065Y00
LDO mode	LDO mode
10/100/1000M	10/100M

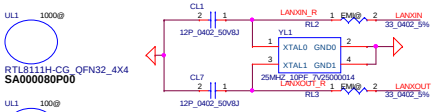

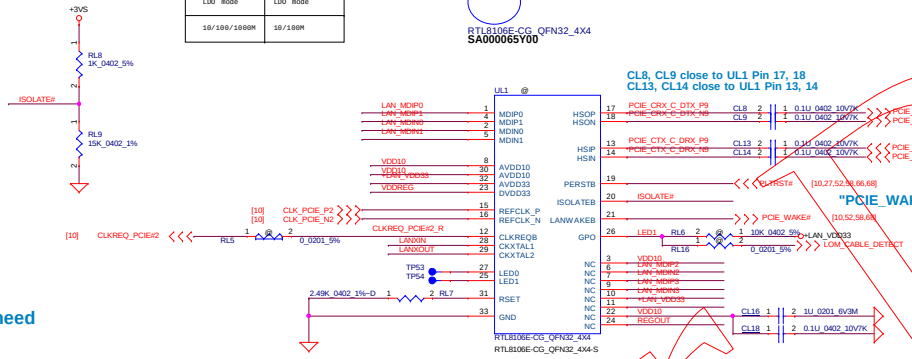

"PCIE_WAKE#" PU 1k on CPU side

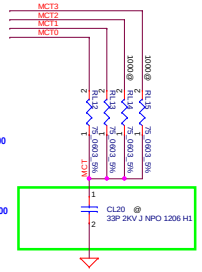

Main Func = LAN LAN TransFormer 10/100M x2

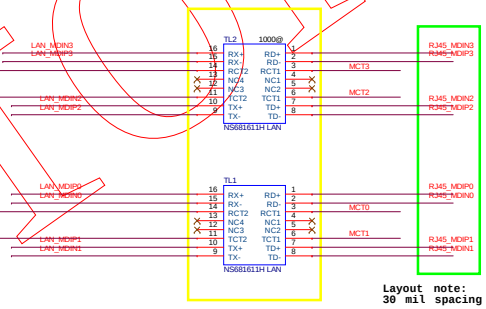

TL1 TOP, TL2 BOT

Layout note:
30 mil spacing between MDI differential pairs.

Layout note:
30 mil spacing between MDI differential pairs.

Follow Reference Schematic 0.01uF~0.4uF

Main:
SP050006H00, S X'FORM_ NS0014 LF LAN
2nd:
SP050006W00, S X'FORM_ HD-245 10/100 PC CARD LAN

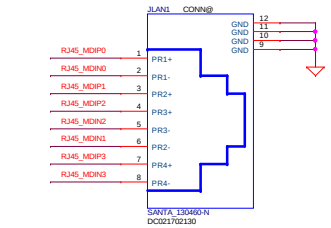

	1.0V Source	RL1	CL2	CL5	CL6	CL10	CL12
RTL8111H-CG RTL8111G-CGT (71.08111.U03)	LDO	O	O	O	O	O	X
RTL8106E-CG (071.08106.0003)	LDO	X	X	X	X	X	O

Security Classification	Compal Secret Data		
Issued Date	2019/06/20	Deciphered Date	2020/06/30

THIS SHEET OF ENGINEERING DRAWING IS THE PROPRIETARY PROPERTY OF COMPAL ELECTRONICS, INC. AND CONTAINS CONFIDENTIAL AND TRADE SECRET INFORMATION. THIS SHEET MAY NOT BE TRANSFERED FROM THE CUSTODY OF THE COMPETENT DIVISION OF R&D DEPARTMENT EXCEPT AS AUTHORIZED BY COMPAL ELECTRONICS, INC. NEITHER THIS SHEET NOR THE INFORMATION IT CONTAINS MAY BE USED BY OR DISCLOSED TO ANY THIRD PARTY WITHOUT PRIOR WRITTEN CONSENT OF COMPAL ELECTRONICS, INC.

Compal Electronics, Inc.

Title: LAN RTL8111/RTL8106

Size: Custom | Document Number: LA-G716P | Rev: 1.0

Date: Thursday, June 20, 2019 | Sheet 51 of 101

Main Func = WLAN

E Key CONN

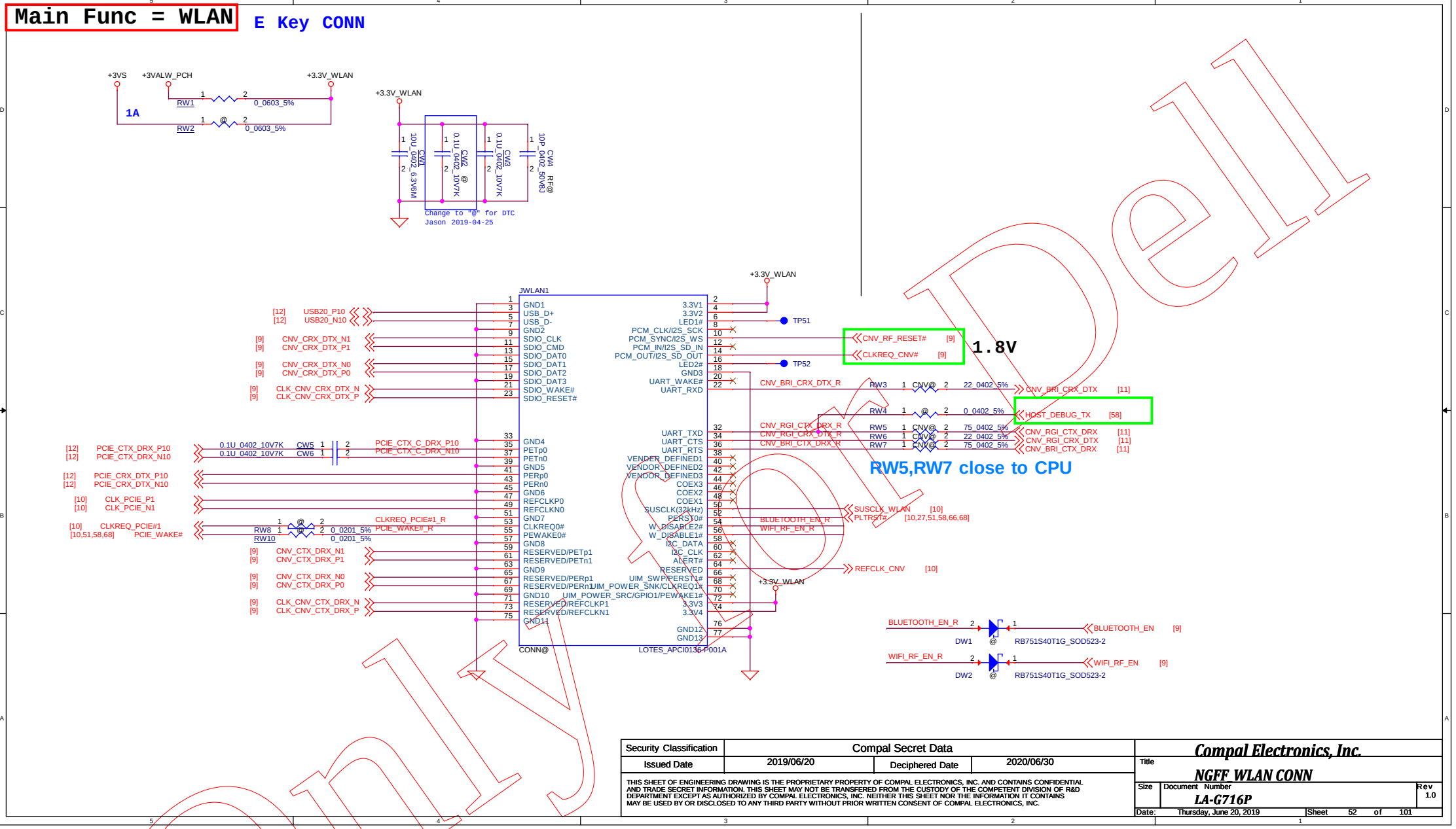

Security Classification	Compal Secret Data		
Issued Date	2019/06/20	Deciphered Date	2020/06/30

THIS SHEET OF ENGINEERING DRAWING IS THE PROPRIETARY PROPERTY OF COMPAL ELECTRONICS, INC. AND CONTAINS CONFIDENTIAL AND TRADE SECRET INFORMATION. THIS SHEET MAY NOT BE TRANSFERED FROM THE CUSTODY OF THE COMPETENT DIVISION OF R&D DEPARTMENT EXCEPT AS AUTHORIZED BY COMPAL ELECTRONICS, INC. NEITHER THIS SHEET NOR THE INFORMATION IT CONTAINS MAY BE USED BY OR DISCLOSED TO ANY THIRD PARTY WITHOUT PRIOR WRITTEN CONSENT OF COMPAL ELECTRONICS, INC.

Compal Electronics, Inc.

Title: **NGFF WLAN CONN**

Size | Document Number: **LA-G716P** | Rev: 1.0

Date: Thursday, June 20, 2019 | Sheet 52 of 101

Only for Dell

Main Function: WIGIG / WIDI

Reserve

Only for Dell

Security Classification	Compal Secret Data		
Issued Date	2019/06/20	Deciphered Date	2020/06/30

THIS SHEET OF ENGINEERING DRAWING IS THE PROPRIETARY PROPERTY OF COMPAL ELECTRONICS, INC. AND CONTAINS CONFIDENTIAL AND TRADE SECRET INFORMATION. THIS SHEET MAY NOT BE TRANSFERED FROM THE CUSTODY OF THE COMPETENT DIVISION OF R&D DEPARTMENT EXCEPT AS AUTHORIZED BY COMPAL ELECTRONICS, INC. NEITHER THIS SHEET NOR THE INFORMATION IT CONTAINS MAY BE USED BY OR DISCLOSED TO ANY THIRD PARTY WITHOUT PRIOR WRITTEN CONSENT OF COMPAL ELECTRONICS, INC.

Compal Electronics, Inc.

Title: WIGIG / WIDI(RSVD)

Size: | Document Number: LA-G716P | Rev: 1.0

Date: Thursday, June 20, 2019 | Sheet 53 of 101

Main Function:

Reserve

Only for Dell

Security Classification	Compal Secret Data		
Issued Date	2019/06/20	Deciphered Date	2020/06/30

THIS SHEET OF ENGINEERING DRAWING IS THE PROPRIETARY PROPERTY OF COMPAL ELECTRONICS, INC. AND CONTAINS CONFIDENTIAL AND TRADE SECRET INFORMATION. THIS SHEET MAY NOT BE TRANSFERED FROM THE CUSTODY OF THE COMPETENT DIVISION OF R&D DEPARTMENT EXCEPT AS AUTHORIZED BY COMPAL ELECTRONICS, INC. NEITHER THIS SHEET NOR THE INFORMATION IT CONTAINS MAY BE USED BY OR DISCLOSED TO ANY THIRD PARTY WITHOUT PRIOR WRITTEN CONSENT OF COMPAL ELECTRONICS, INC.

Compal Electronics, Inc.

Title: (RSVD)

Size: | Document Number: LA-G716P | Rev: 1.0

Date: Thursday, June 20, 2019 | Sheet 54 of 101

Main Function:

Reserve

Only for Dell

Security Classification	Compal Secret Data		
Issued Date	2019/06/20	Deciphered Date	2020/06/30

THIS SHEET OF ENGINEERING DRAWING IS THE PROPRIETARY PROPERTY OF COMPAL ELECTRONICS, INC. AND CONTAINS CONFIDENTIAL AND TRADE SECRET INFORMATION. THIS SHEET MAY NOT BE TRANSFERED FROM THE CUSTODY OF THE COMPETENT DIVISION OF R&D DEPARTMENT EXCEPT AS AUTHORIZED BY COMPAL ELECTRONICS, INC. NEITHER THIS SHEET NOR THE INFORMATION IT CONTAINS MAY BE USED BY OR DISCLOSED TO ANY THIRD PARTY WITHOUT PRIOR WRITTEN CONSENT OF COMPAL ELECTRONICS, INC.

Compal Electronics, Inc.

Title: (RSVD)

Size: | Document Number: LA-G716P | Rev: 1.0

Date: Thursday, June 20, 2019 | Sheet 55 of 101

Main Func = Audio

EMI@, RF@, @EMI@, @ESD@, @RF@

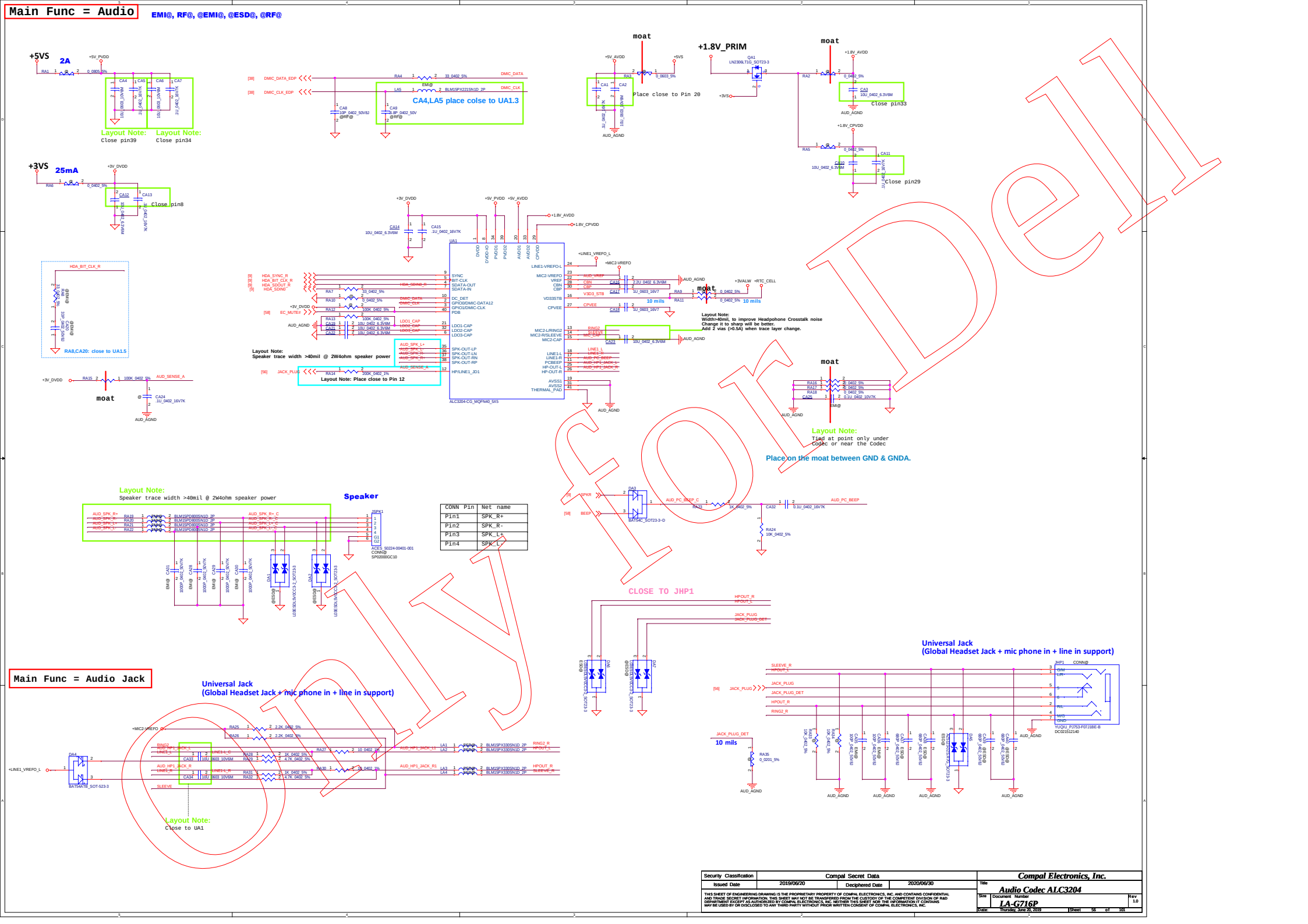

CONN Pin	Net name
Pin1	SPK_R+
Pin2	SPK_R-
Pin3	SPK_L+
Pin4	SPK_L-

Security Classification	Compal Secret Data		
Issued Date	2019/06/20	Deciphered Date	2020/06/30

THIS SHEET OF ENGINEERING DRAWING IS THE PROPRIETARY PROPERTY OF COMPAL ELECTRONICS, INC. AND CONTAINS CONFIDENTIAL AND TRADE SECRET INFORMATION. THIS SHEET MAY NOT BE TRANSFERRED FROM THE CUSTODY OF THE COMPETENT DIVISION OF R&D DEPARTMENT EXCEPT AS AUTHORIZED BY COMPAL ELECTRONICS, INC. NEITHER THIS SHEET NOR THE INFORMATION IT CONTAINS MAY BE USED BY OR DISCLOSED TO ANY THIRD PARTY WITHOUT PRIOR WRITTEN CONSENT OF COMPAL ELECTRONICS, INC.

Compal Electronics, Inc.

Title: Audio Codec ALC3204

Size: | Document Number: LA-G716P | Rev: 1.0

Date: Thursday, June 20, 2019 | Sheet 56 of 101

Main Function:

Reserve

Only for Dell

Security Classification	Compal Secret Data		
Issued Date	2019/06/20	Deciphered Date	2020/06/30

THIS SHEET OF ENGINEERING DRAWING IS THE PROPRIETARY PROPERTY OF COMPAL ELECTRONICS, INC. AND CONTAINS CONFIDENTIAL AND TRADE SECRET INFORMATION. THIS SHEET MAY NOT BE TRANSFERED FROM THE CUSTODY OF THE COMPETENT DIVISION OF R&D DEPARTMENT EXCEPT AS AUTHORIZED BY COMPAL ELECTRONICS, INC. NEITHER THIS SHEET NOR THE INFORMATION IT CONTAINS MAY BE USED BY OR DISCLOSED TO ANY THIRD PARTY WITHOUT PRIOR WRITTEN CONSENT OF COMPAL ELECTRONICS, INC.

Compal Electronics, Inc.

Title: (RSVD)

Size: | Document Number: LA-G716P | Rev: 1.0

Date: Thursday, June 20, 2019 | Sheet 57 of 101

Main Func = EC

1.8V or 3.3V I/O Pins
- GPIO63/LPCPD#/ESPI_RESET#
- VTR_33_18
- GPIO63/SERIRQ/ESPI_ALERT#
- GPIO64/LRESET#
- GPIO34/PWUREQ/ESPI_CLK
- GPIO44/LFRAME#/ESPI_CS#
- GPIO40/LAD0/ESPI_IO0
- GPIO41/LAD1/ESPI_IO1
- GPIO42/LAD2/ESPI_IO2
- GPIO43/LAD3/ESPI_IO3
- GPIO67/CLKRUN#

RE3 SBDR@	RE3 NBDR@	RE1 EC@
49.9K_0402_1%	82.5K_0402_1%	64.9K_0402_1%
SD034499280	SD000002780	SD034649280

SD034100280	10K_0402_1%
SD034178280	17.8K_0402_1%
SD034270280	27K_0402_1%
SD034374280	37.4K_0402_1%
SD034499280	49.9K_0402_1%
SD034649280	64.9K_0402_1%
SD000002780	82.5K_0402_1%
SD034107380	107K_0402_1%
SD034154380	154K_0402_1%
SD034200380	200K_0402_1%

UE1 EC@ — EC Chip CPN
MEC1418-NU-D0 VTQFP 128P
SA0000CEW00

RE3 for Model ID Select		RE1 for Board ID Select	
SBDR-UMA	10.0K	EVT	10.0K
NBDR-UMA	27.0K	DVT1	17.8K
SBDR-DSC	49.9K	DVT2	37.4K
NBDR-DSC	82.5K	Pilot	64.9K

Model ID — RE3 100K_0402_1% @ (Ra), RE4 100K_0402_1% (Rb), CE10 0.1U_0402_10V7K, MODEL_ID, EC_AGND

Board ID — RE1 100K_0402_1% @ (Ra), RE2 100K_0402_1% (Rb), CE11 0.1U_0402_10V7K, BOARD_ID, EC_AGND

MEC1416 — UE1 — MEC1416-NU-D0_VTQFP128_14X14

Close to UE1.57

UE2 change CPN & Description only Jason 2019-04-26

32 KHz Clock — YE1 32.768KHZ_9PF_X1A000141000200 20ppm / 9pF ESR <50kohm (MAX)

Close UE1

ESR <100m ohms Close UE1

Debug Connector — JESPI1 JXT_FP241AH-010GAAM SP010021O00; JDEG1 JXT_FP241AH-010GAAM SP010021O00

Pin8 5885_TXD for EC Debug
pin9 5848_TXD for SBIOS debug

CE28 change to POP and change value from "220P_0402_50V" to "56P_0402_50V" for EMI request Jason 2019-06-14

Close to UE1 each pin

Security Classification	Compal Secret Data		
Issued Date	2019/06/20	Deciphered Date	2020/06/30

THIS SHEET OF ENGINEERING DRAWING IS THE PROPRIETARY PROPERTY OF COMPAL ELECTRONICS, INC. AND CONTAINS CONFIDENTIAL AND TRADE SECRET INFORMATION. THIS SHEET MAY NOT BE TRANSFERED FROM THE CUSTODY OF THE COMPETENT DIVISION OF R&D DEPARTMENT EXCEPT AS AUTHORIZED BY COMPAL ELECTRONICS, INC. NEITHER THIS SHEET NOR THE INFORMATION IT CONTAINS MAY BE USED BY OR DISCLOSED TO ANY THIRD PARTY WITHOUT PRIOR WRITTEN CONSENT OF COMPAL ELECTRONICS, INC.

Compal Electronics, Inc.
Title: EC MEC1418
Size: Document Number: LA-G716P Rev 1.0
Date: Thursday, June 20, 2019 Sheet 58 of 101

Main Function:

Reserve

Only for Dell

Security Classification	Compal Secret Data		
Issued Date	2019/06/20	Deciphered Date	2020/06/30

THIS SHEET OF ENGINEERING DRAWING IS THE PROPRIETARY PROPERTY OF COMPAL ELECTRONICS, INC. AND CONTAINS CONFIDENTIAL AND TRADE SECRET INFORMATION. THIS SHEET MAY NOT BE TRANSFERED FROM THE CUSTODY OF THE COMPETENT DIVISION OF R&D DEPARTMENT EXCEPT AS AUTHORIZED BY COMPAL ELECTRONICS, INC. NEITHER THIS SHEET NOR THE INFORMATION IT CONTAINS MAY BE USED BY OR DISCLOSED TO ANY THIRD PARTY WITHOUT PRIOR WRITTEN CONSENT OF COMPAL ELECTRONICS, INC.

Compal Electronics, Inc.

Title: (RSVD)

Size: | Document Number: LA-G716P | Rev: 1.0

Date: Thursday, June 20, 2019 | Sheet 59 of 101

Main Function:

Reserve

Only for Dell

Security Classification	Compal Secret Data		
Issued Date	2019/06/20	Deciphered Date	2020/06/30

THIS SHEET OF ENGINEERING DRAWING IS THE PROPRIETARY PROPERTY OF COMPAL ELECTRONICS, INC. AND CONTAINS CONFIDENTIAL AND TRADE SECRET INFORMATION. THIS SHEET MAY NOT BE TRANSFERED FROM THE CUSTODY OF THE COMPETENT DIVISION OF R&D DEPARTMENT EXCEPT AS AUTHORIZED BY COMPAL ELECTRONICS, INC. NEITHER THIS SHEET NOR THE INFORMATION IT CONTAINS MAY BE USED BY OR DISCLOSED TO ANY THIRD PARTY WITHOUT PRIOR WRITTEN CONSENT OF COMPAL ELECTRONICS, INC.

Compal Electronics, Inc.

Title: (RSVD)

Size: | Document Number: LA-G716P | Rev: 1.0

Date: Thursday, June 20, 2019 | Sheet 60 of 101

Main Function:SMB/I2C Block Diagrams

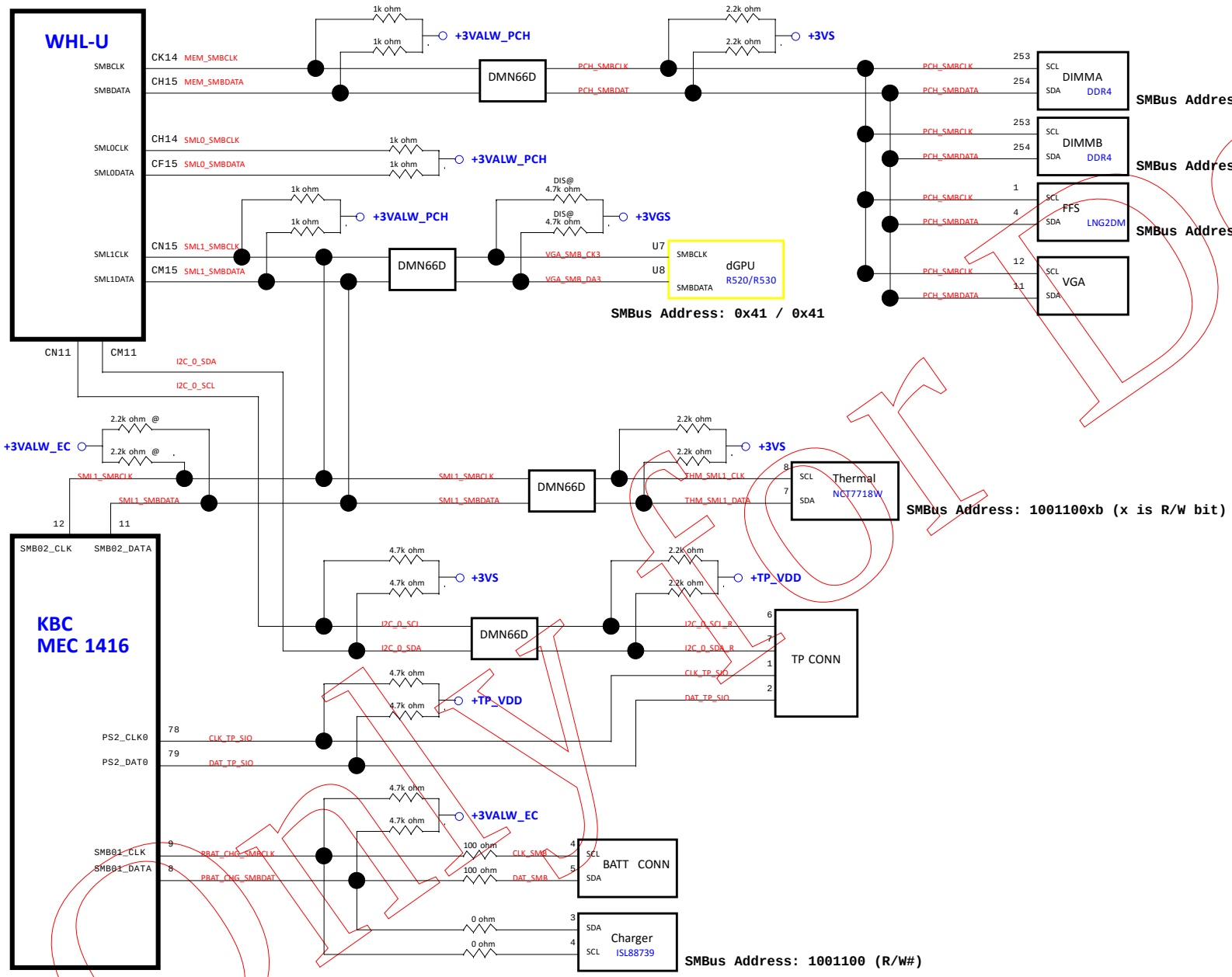

Original Dell

Security Classification	Compal Secret Data		
Issued Date	2019/06/20	Deciphered Date	2020/06/30

THIS SHEET OF ENGINEERING DRAWING IS THE PROPRIETARY PROPERTY OF COMPAL ELECTRONICS, INC. AND CONTAINS CONFIDENTIAL AND TRADE SECRET INFORMATION. THIS SHEET MAY NOT BE TRANSFERED FROM THE CUSTODY OF THE COMPETENT DIVISION OF R&D DEPARTMENT EXCEPT AS AUTHORIZED BY COMPAL ELECTRONICS, INC. NEITHER THIS SHEET NOR THE INFORMATION IT CONTAINS MAY BE USED BY OR DISCLOSED TO ANY THIRD PARTY WITHOUT PRIOR WRITTEN CONSENT OF COMPAL ELECTRONICS, INC.

Compal Electronics, Inc.

Title: SMB/I2C Block Diagrams

Size | Document Number: LA-G716P | Rev: 1.0

Date: Thursday, June 20, 2019 | Sheet 61 of 101

Main Function:

Reserve

Only for Dell

Security Classification	Compal Secret Data		
Issued Date	2019/06/20	Deciphered Date	2020/06/30

THIS SHEET OF ENGINEERING DRAWING IS THE PROPRIETARY PROPERTY OF COMPAL ELECTRONICS, INC. AND CONTAINS CONFIDENTIAL AND TRADE SECRET INFORMATION. THIS SHEET MAY NOT BE TRANSFERED FROM THE CUSTODY OF THE COMPETENT DIVISION OF R&D DEPARTMENT EXCEPT AS AUTHORIZED BY COMPAL ELECTRONICS, INC. NEITHER THIS SHEET NOR THE INFORMATION IT CONTAINS MAY BE USED BY OR DISCLOSED TO ANY THIRD PARTY WITHOUT PRIOR WRITTEN CONSENT OF COMPAL ELECTRONICS, INC.

Compal Electronics, Inc.

Title: (RSVD)

Size: | Document Number: LA-G716P | Rev: 1.0

Date: Thursday, June 20, 2019 | Sheet 62 of 101

Main Func = KB

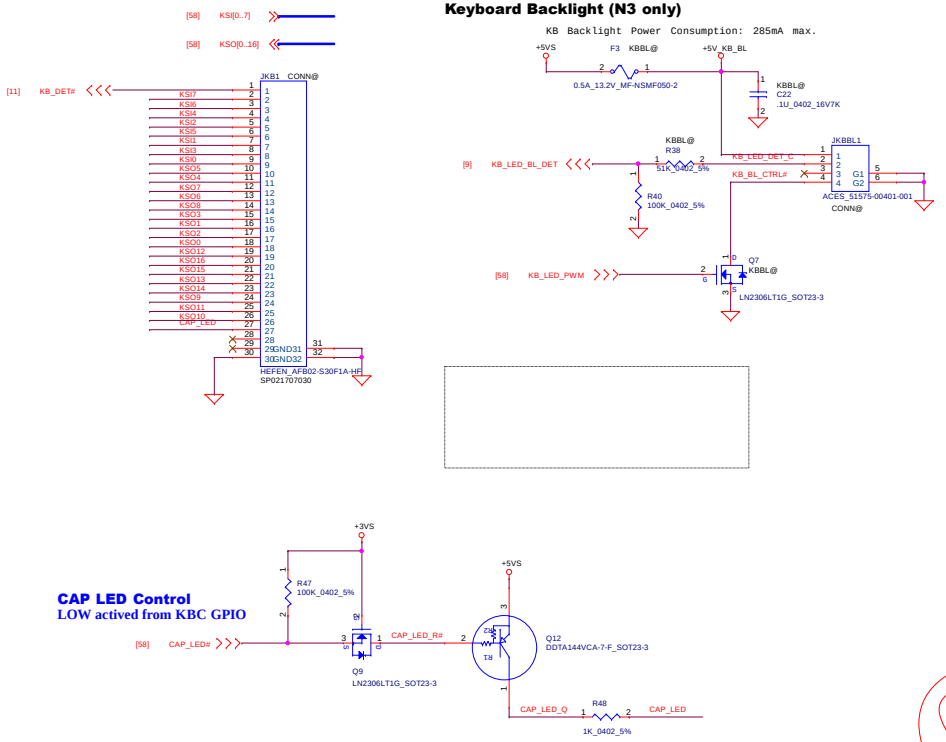

Main Func = TPAD

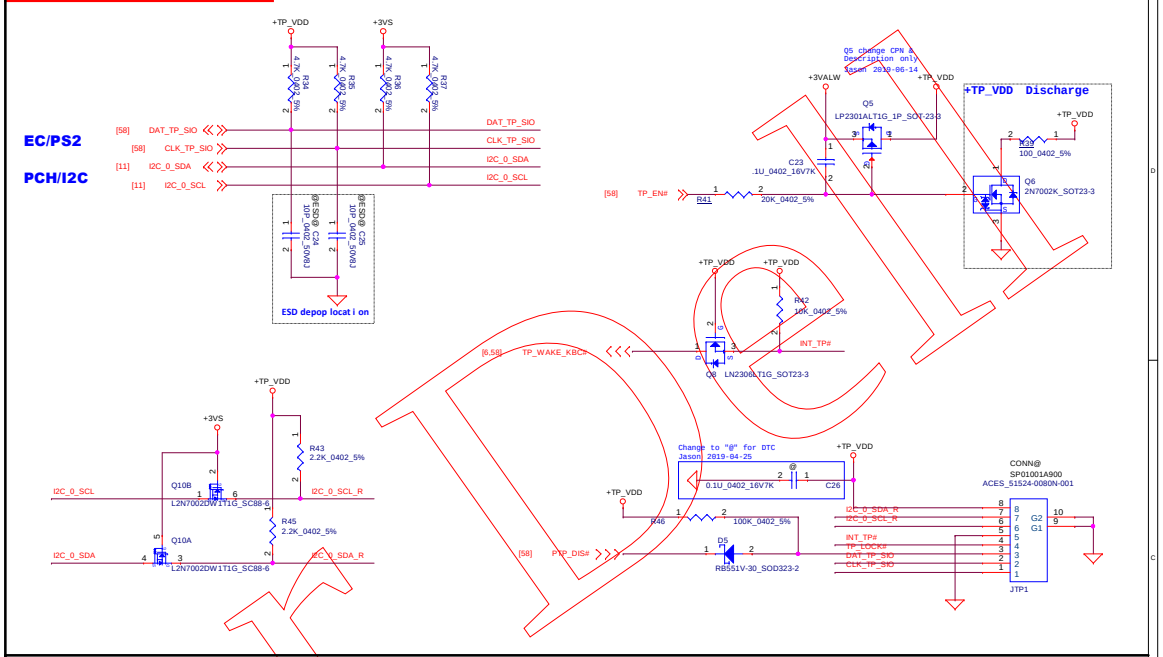

Main Func = Battery LED

Low actived from KBC GPIO

BJT
R1: 47 K
R2: 10 K

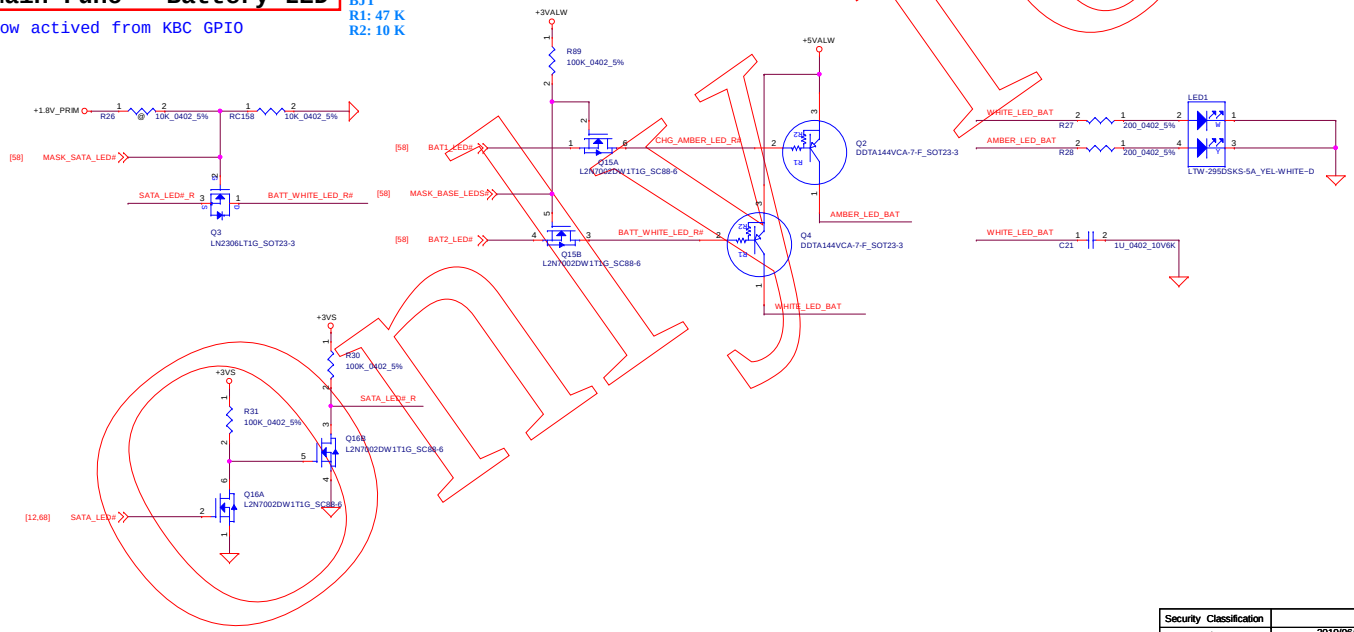

Confidential

Security Classification	Compal Secret Data		
Issued Date	2019/06/20	Deciphered Date	2020/06/30

THIS SHEET OF ENGINEERING DRAWING IS THE PROPRIETARY PROPERTY OF COMPAL ELECTRONICS, INC. AND CONTAINS CONFIDENTIAL AND TRADE SECRET INFORMATION. THIS SHEET MAY NOT BE TRANSFERED FROM THE CUSTODY OF THE COMPETENT DIVISION OF R&D DEPARTMENT EXCEPT AS AUTHORIZED BY COMPAL ELECTRONICS, INC. NEITHER THIS SHEET NOR THE INFORMATION IT CONTAINS MAY BE USED BY OR DISCLOSED TO ANY THIRD PARTY WITHOUT PRIOR WRITTEN CONSENT OF COMPAL ELECTRONICS, INC.

Compal Electronics, Inc.

Title: Keyboard/Touch Pad/Thermal/FAN

Size | Document Number: LA-G716P | Rev: 1.0

Date: Thursday, June 20, 2019 | Sheet 63 of 101

Main Function:

Reserve

Only for Dell

Security Classification	Compal Secret Data		
Issued Date	2019/06/20	Deciphered Date	2020/06/30

THIS SHEET OF ENGINEERING DRAWING IS THE PROPRIETARY PROPERTY OF COMPAL ELECTRONICS, INC. AND CONTAINS CONFIDENTIAL AND TRADE SECRET INFORMATION. THIS SHEET MAY NOT BE TRANSFERED FROM THE CUSTODY OF THE COMPETENT DIVISION OF R&D DEPARTMENT EXCEPT AS AUTHORIZED BY COMPAL ELECTRONICS, INC. NEITHER THIS SHEET NOR THE INFORMATION IT CONTAINS MAY BE USED BY OR DISCLOSED TO ANY THIRD PARTY WITHOUT PRIOR WRITTEN CONSENT OF COMPAL ELECTRONICS, INC.

Compal Electronics, Inc.

Title: (RSVD)

Size: | Document Number: LA-G716P | Rev: 1.0

Date: Thursday, June 20, 2019 | Sheet 64 of 101

Main Function:

Reserve

Only for Dell

Security Classification	Compal Secret Data		
Issued Date	2019/06/20	Deciphered Date	2020/06/30

THIS SHEET OF ENGINEERING DRAWING IS THE PROPRIETARY PROPERTY OF COMPAL ELECTRONICS, INC. AND CONTAINS CONFIDENTIAL AND TRADE SECRET INFORMATION. THIS SHEET MAY NOT BE TRANSFERED FROM THE CUSTODY OF THE COMPETENT DIVISION OF R&D DEPARTMENT EXCEPT AS AUTHORIZED BY COMPAL ELECTRONICS, INC. NEITHER THIS SHEET NOR THE INFORMATION IT CONTAINS MAY BE USED BY OR DISCLOSED TO ANY THIRD PARTY WITHOUT PRIOR WRITTEN CONSENT OF COMPAL ELECTRONICS, INC.

Compal Electronics, Inc.

Title: (RSVD)

Size: | Document Number: LA-G716P | Rev: 1.0

Date: Thursday, June 20, 2019 | Sheet 65 of 101

Main Func = FPR

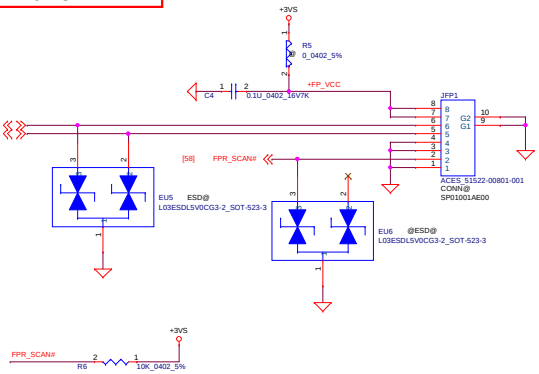

Main Func = OTP

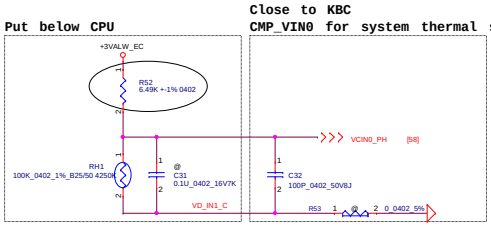

Main Func = TPM

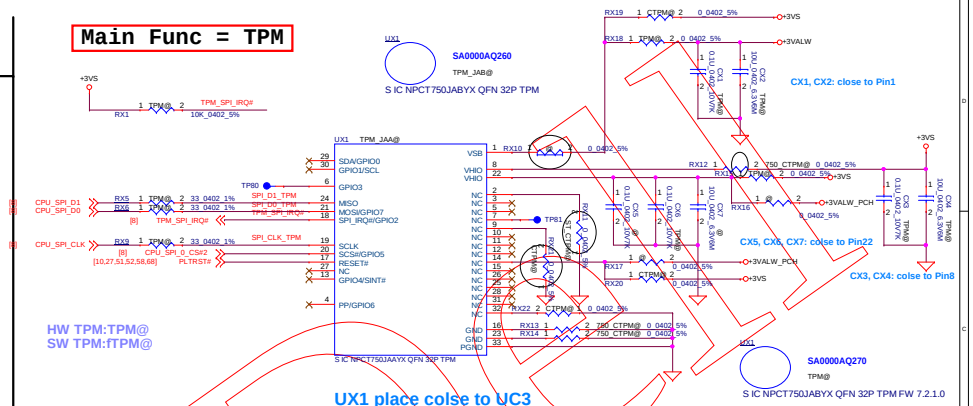

Main Func = Thermal

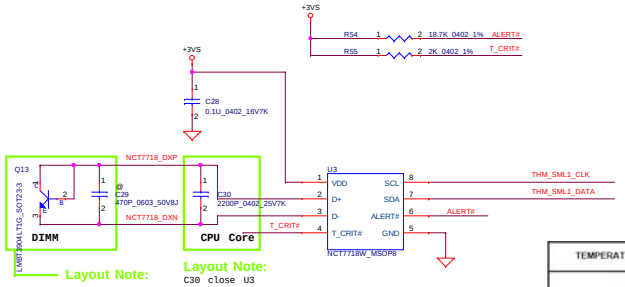

DXN and DXP routing width and spacing is 10 mil / 10 mil.

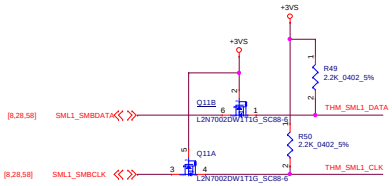

TEMPERATURE (℃)		T_CRIT#				
		2KΩ	7.5KΩ	10.5KΩ	14KΩ	18.7KΩ
ALERT#	2KΩ	77	87	97	107	117
	7.5KΩ	79	89	99	109	119
	10.5KΩ	81	91	101	111	121
	14KΩ	83	93	103	113	123
	18.7KΩ	85	95	105	115	125

Main Func = RTC

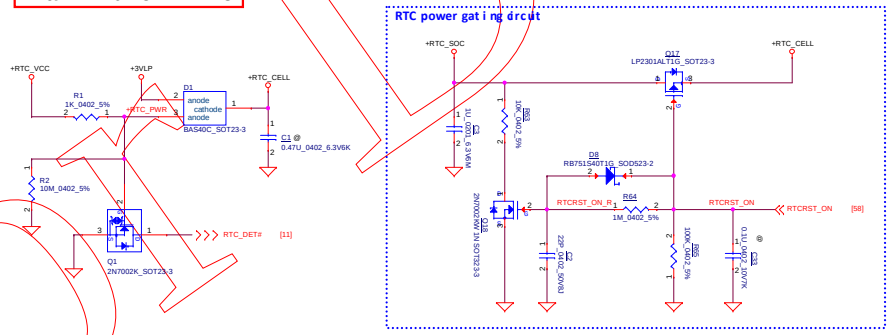

Security Classification	Compal Secret Data		
Issued Date	2019/06/20	Deciphered Date	2020/06/30

THIS SHEET OF ENGINEERING DRAWING IS THE PROPRIETARY PROPERTY OF COMPAL ELECTRONICS, INC. AND CONTAINS CONFIDENTIAL AND TRADE SECRET INFORMATION. THIS SHEET MAY NOT BE TRANSFERED FROM THE CUSTODY OF THE COMPETENT DIVISION OF R&D DEPARTMENT EXCEPT AS AUTHORIZED BY COMPAL ELECTRONICS, INC. NEITHER THIS SHEET NOR THE INFORMATION IT CONTAINS MAY BE USED BY OR DISCLOSED TO ANY THIRD PARTY WITHOUT PRIOR WRITTEN CONSENT OF COMPAL ELECTRONICS, INC.

Compal Electronics, Inc.

Title: TPM/RTC/Screw hole

Size | Document Number: LA-G716P | Rev: 1.0

Date: Thursday, June 20, 2019 | Sheet 66 of 101

Only for reference

Main Func = HDD&FFS

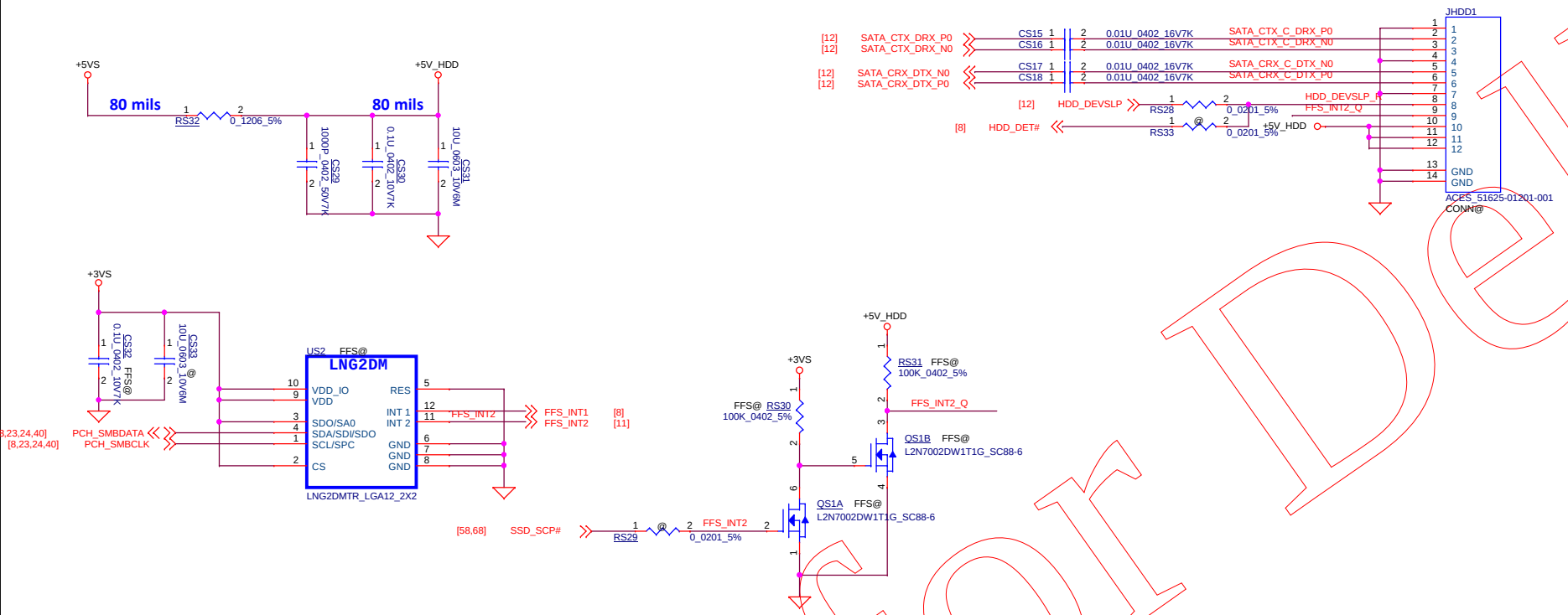

CONN		FFC
GND	S1	1
A+	S2	2
A-	S3	3
GND	S4	4
B-	S5	5
B+	S6	6
GND	S7	7
DEVSLP	P3	8
5V	P7	10
5V	P8	11
5V	P9	12
GND	P10	
Device Activity	P11	9

Main Func = ODD

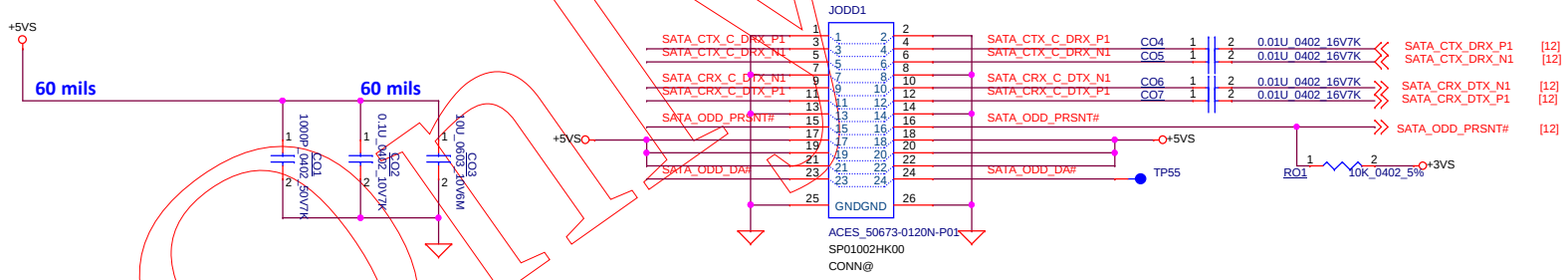

CONN		FFC
GND	S1	1
A+	S2	2
A-	S3	3
GND	S4	4
B-	S5	5
B+	S6	6
GND	S7	7
PRSNT	P1	8
5V	P2	9
5V	P3	10 11
Attentio	P4	12
GND	P5	
GND	P6	

Only for Dell

Security Classification	Compal Secret Data		
Issued Date	2019/06/20	Deciphered Date	2020/06/30

THIS SHEET OF ENGINEERING DRAWING IS THE PROPRIETARY PROPERTY OF COMPAL ELECTRONICS, INC. AND CONTAINS CONFIDENTIAL AND TRADE SECRET INFORMATION. THIS SHEET MAY NOT BE TRANSFERED FROM THE CUSTODY OF THE COMPETENT DIVISION OF R&D DEPARTMENT EXCEPT AS AUTHORIZED BY COMPAL ELECTRONICS, INC. NEITHER THIS SHEET NOR THE INFORMATION IT CONTAINS MAY BE USED BY OR DISCLOSED TO ANY THIRD PARTY WITHOUT PRIOR WRITTEN CONSENT OF COMPAL ELECTRONICS, INC.

Compal Electronics, Inc.

Title: **HDD/FFS/ODD**

Size: Custom | Document Number: **LA-G716P** | Rev: 1.0

Date: Thursday, June 20, 2019 | Sheet 67 of 101

Main Func = SSD

M Key CONN

NGFF Key M

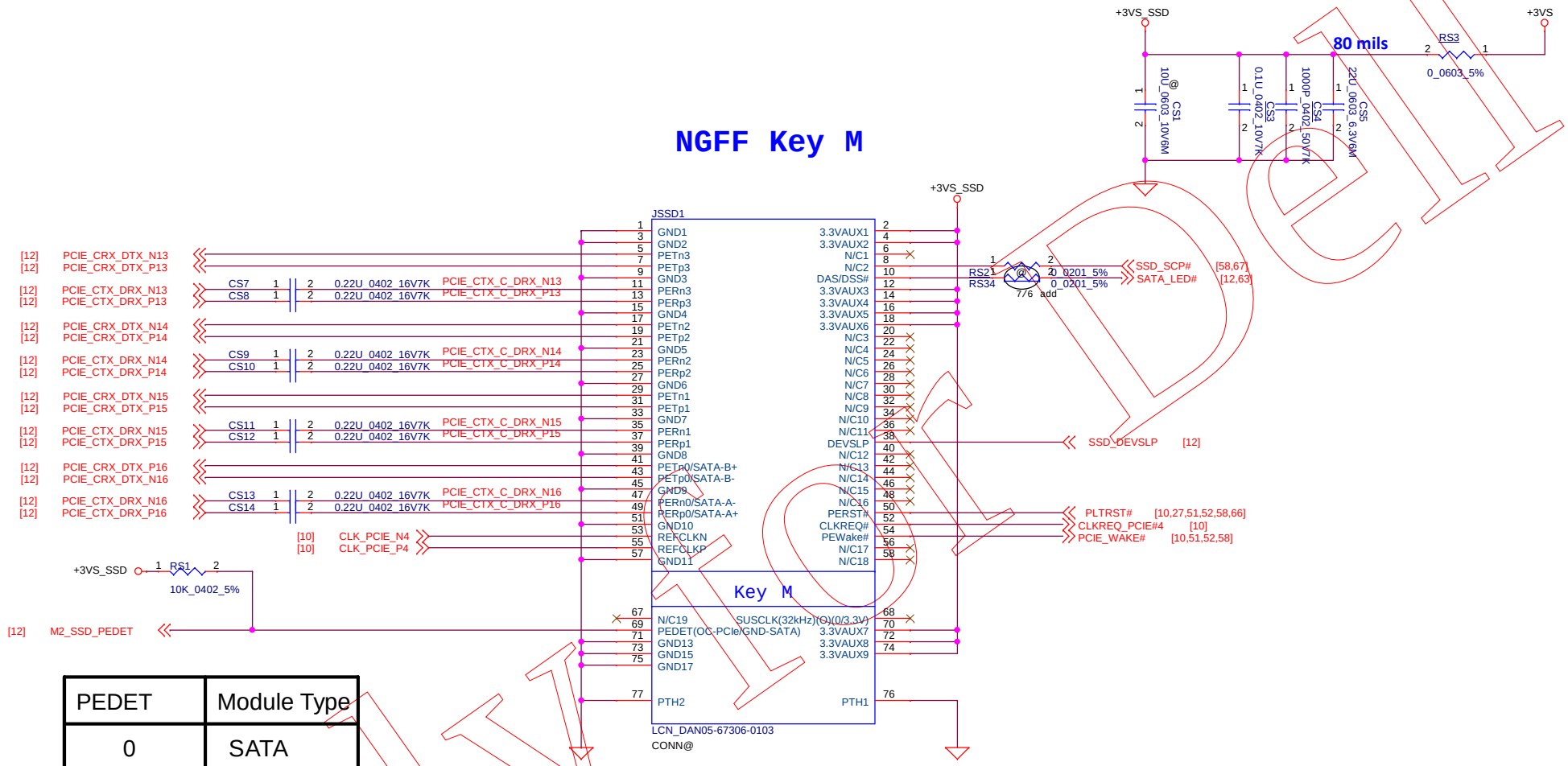

PEDET	Module Type
0	SATA
1	PCIE

Security Classification	Compal Secret Data		
Issued Date	2019/06/20	Deciphered Date	2020/06/30

THIS SHEET OF ENGINEERING DRAWING IS THE PROPRIETARY PROPERTY OF COMPAL ELECTRONICS, INC. AND CONTAINS CONFIDENTIAL AND TRADE SECRET INFORMATION. THIS SHEET MAY NOT BE TRANSFERED FROM THE CUSTODY OF THE COMPETENT DIVISION OF R&D DEPARTMENT EXCEPT AS AUTHORIZED BY COMPAL ELECTRONICS, INC. NEITHER THIS SHEET NOR THE INFORMATION IT CONTAINS MAY BE USED BY OR DISCLOSED TO ANY THIRD PARTY WITHOUT PRIOR WRITTEN CONSENT OF COMPAL ELECTRONICS, INC.

Compal Electronics, Inc.

Title: **NVME SSD**

Size: | Document Number: **LA-G716P** | Rev: 1.0

Date: Thursday, June 20, 2019 | Sheet 68 of 101

Only Dell

Main Func = eMMC

Only for Dell

Security Classification	Compal Secret Data		
Issued Date	2019/06/20	Deciphered Date	2020/06/30

THIS SHEET OF ENGINEERING DRAWING IS THE PROPRIETARY PROPERTY OF COMPAL ELECTRONICS, INC. AND CONTAINS CONFIDENTIAL AND TRADE SECRET INFORMATION. THIS SHEET MAY NOT BE TRANSFERED FROM THE CUSTODY OF THE COMPETENT DIVISION OF R&D DEPARTMENT EXCEPT AS AUTHORIZED BY COMPAL ELECTRONICS, INC. NEITHER THIS SHEET NOR THE INFORMATION IT CONTAINS MAY BE USED BY OR DISCLOSED TO ANY THIRD PARTY WITHOUT PRIOR WRITTEN CONSENT OF COMPAL ELECTRONICS, INC.

Compal Electronics, Inc.

Title: eMMC (RSVD)

Size: | Document Number: LA-G716P | Rev: 1.0

Date: Thursday, June 20, 2019 | Sheet 69 of 101

Main Function:

Reserve

Only for Dell

Security Classification	Compal Secret Data		
Issued Date	2019/06/20	Deciphered Date	2020/06/30

THIS SHEET OF ENGINEERING DRAWING IS THE PROPRIETARY PROPERTY OF COMPAL ELECTRONICS, INC. AND CONTAINS CONFIDENTIAL AND TRADE SECRET INFORMATION. THIS SHEET MAY NOT BE TRANSFERED FROM THE CUSTODY OF THE COMPETENT DIVISION OF R&D DEPARTMENT EXCEPT AS AUTHORIZED BY COMPAL ELECTRONICS, INC. NEITHER THIS SHEET NOR THE INFORMATION IT CONTAINS MAY BE USED BY OR DISCLOSED TO ANY THIRD PARTY WITHOUT PRIOR WRITTEN CONSENT OF COMPAL ELECTRONICS, INC.

Compal Electronics, Inc.

Title: (RSVD)

Size: | Document Number: LA-G716P | Rev: 1.0

Date: Thursday, June 20, 2019 | Sheet 70 of 101

Main Func = USB3.0 Port1

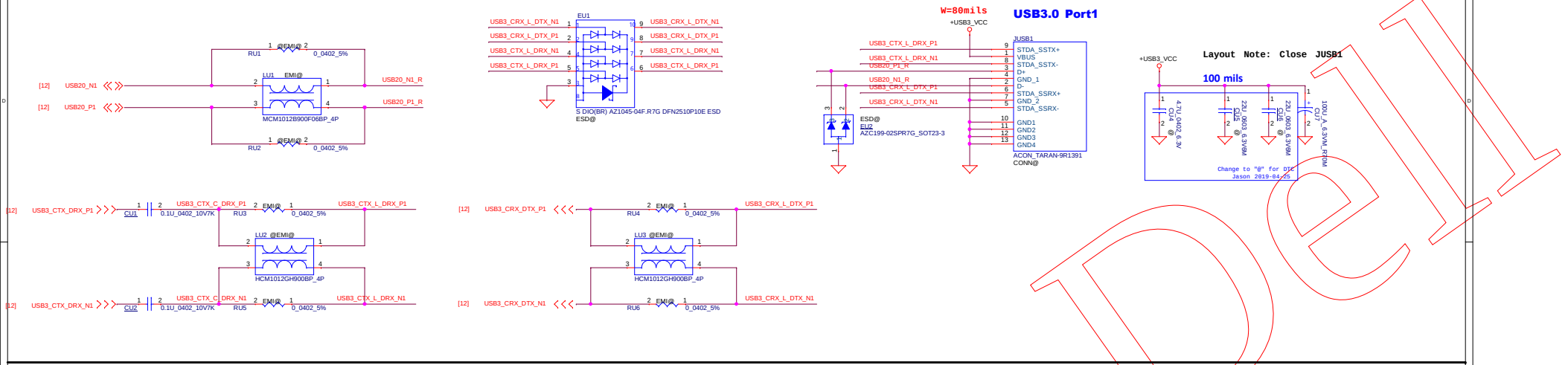

Maximum Output Current 2A

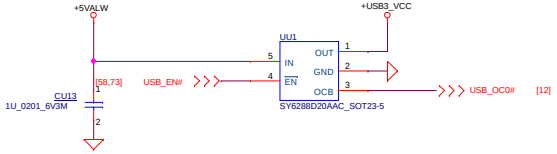

Main Func = USB3.0 Port2

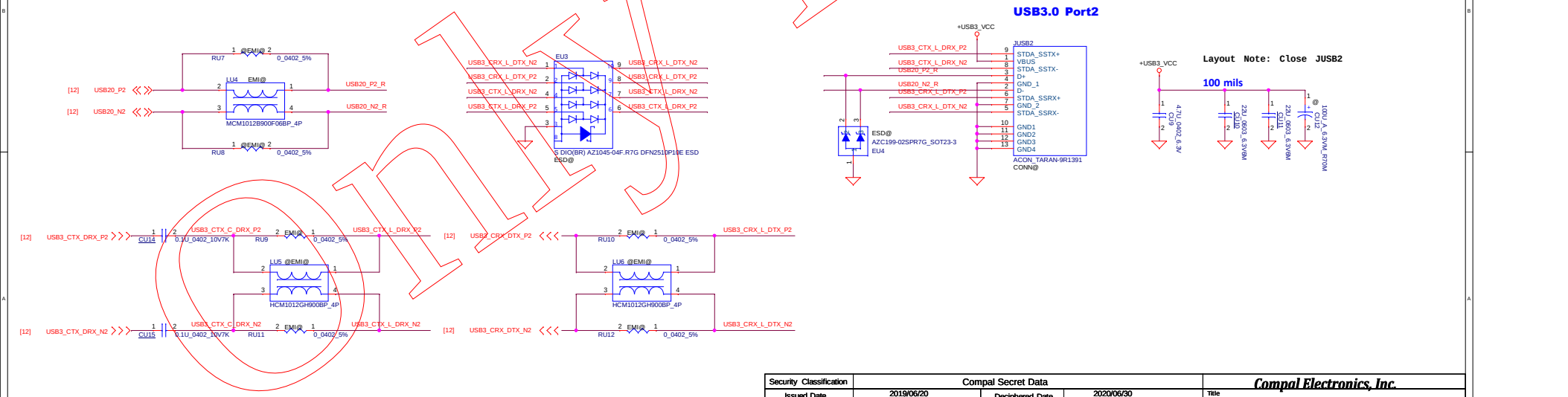

Only for Dell

Security Classification	Compal Secret Data		
Issued Date	2019/06/20	Deciphered Date	2020/06/30

THIS SHEET OF ENGINEERING DRAWING IS THE PROPRIETARY PROPERTY OF COMPAL ELECTRONICS, INC. AND CONTAINS CONFIDENTIAL AND TRADE SECRET INFORMATION. THIS SHEET MAY NOT BE TRANSFERED FROM THE CUSTODY OF THE COMPETENT DIVISION OF R&D DEPARTMENT EXCEPT AS AUTHORIZED BY COMPAL ELECTRONICS, INC. NEITHER THIS SHEET NOR THE INFORMATION IT CONTAINS MAY BE USED BY OR DISCLOSED TO ANY THIRD PARTY WITHOUT PRIOR WRITTEN CONSENT OF COMPAL ELECTRONICS, INC.

Compal Electronics, Inc.

Title: USB3.0

Size | Document Number: LA-G716P | Rev: 1.0

Date: Thursday, June 20, 2019 | Sheet 71 of 101

Main Function:

Reserve

Only for Dell

Security Classification	Compal Secret Data		
Issued Date	2019/06/20	Deciphered Date	2020/06/30

THIS SHEET OF ENGINEERING DRAWING IS THE PROPRIETARY PROPERTY OF COMPAL ELECTRONICS, INC. AND CONTAINS CONFIDENTIAL AND TRADE SECRET INFORMATION. THIS SHEET MAY NOT BE TRANSFERED FROM THE CUSTODY OF THE COMPETENT DIVISION OF R&D DEPARTMENT EXCEPT AS AUTHORIZED BY COMPAL ELECTRONICS, INC. NEITHER THIS SHEET NOR THE INFORMATION IT CONTAINS MAY BE USED BY OR DISCLOSED TO ANY THIRD PARTY WITHOUT PRIOR WRITTEN CONSENT OF COMPAL ELECTRONICS, INC.

Compal Electronics, Inc.

Title: (RSVD)

Size: | Document Number: LA-G716P | Rev: 1.0

Date: Thursday, June 20, 2019 | Sheet 72 of 101

Main Func = USB2.0 Port3 + Card Reader on IO/B

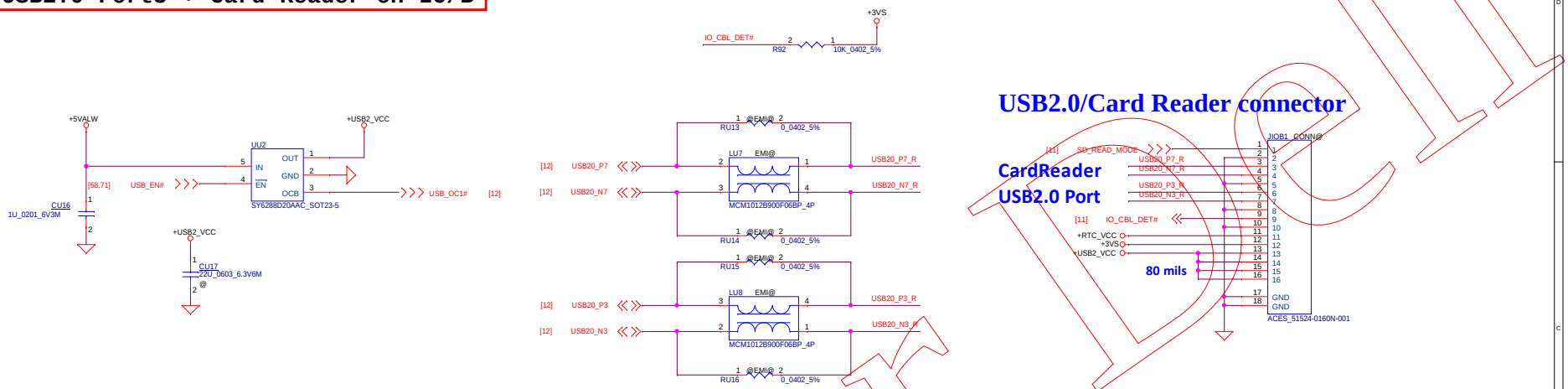

Only for Dell

Security Classification	Compal Secret Data		
Issued Date	2019/06/20	Deciphered Date	2020/06/30

THIS SHEET OF ENGINEERING DRAWING IS THE PROPRIETARY PROPERTY OF COMPAL ELECTRONICS, INC. AND CONTAINS CONFIDENTIAL AND TRADE SECRET INFORMATION. THIS SHEET MAY NOT BE TRANSFERED FROM THE CUSTODY OF THE COMPETENT DIVISION OF R&D DEPARTMENT EXCEPT AS AUTHORIZED BY COMPAL ELECTRONICS, INC. NEITHER THIS SHEET NOR THE INFORMATION IT CONTAINS MAY BE USED BY OR DISCLOSED TO ANY THIRD PARTY WITHOUT PRIOR WRITTEN CONSENT OF COMPAL ELECTRONICS, INC.

Compal Electronics, Inc.

Title: **Finger Print & I/O CONN**

Size: | Document Number: **LA-G716P** | Rev: 1.0

Date: Thursday, June 20, 2019 | Sheet 73 of 101

Main Function:

Reserve

Only for Dell

Security Classification	Compal Secret Data		
Issued Date	2019/06/20	Deciphered Date	2020/06/30

THIS SHEET OF ENGINEERING DRAWING IS THE PROPRIETARY PROPERTY OF COMPAL ELECTRONICS, INC. AND CONTAINS CONFIDENTIAL AND TRADE SECRET INFORMATION. THIS SHEET MAY NOT BE TRANSFERED FROM THE CUSTODY OF THE COMPETENT DIVISION OF R&D DEPARTMENT EXCEPT AS AUTHORIZED BY COMPAL ELECTRONICS, INC. NEITHER THIS SHEET NOR THE INFORMATION IT CONTAINS MAY BE USED BY OR DISCLOSED TO ANY THIRD PARTY WITHOUT PRIOR WRITTEN CONSENT OF COMPAL ELECTRONICS, INC.

Compal Electronics, Inc.

Title: DOCK(RSVD)

Size: | Document Number: LA-G716P | Rev: 1.0

Date: Thursday, June 20, 2019 | Sheet 74 of 101

Main Function:

Reserve

Only for Dell

Security Classification	Compal Secret Data		
Issued Date	2019/06/20	Deciphered Date	2020/06/30

THIS SHEET OF ENGINEERING DRAWING IS THE PROPRIETARY PROPERTY OF COMPAL ELECTRONICS, INC. AND CONTAINS CONFIDENTIAL AND TRADE SECRET INFORMATION. THIS SHEET MAY NOT BE TRANSFERED FROM THE CUSTODY OF THE COMPETENT DIVISION OF R&D DEPARTMENT EXCEPT AS AUTHORIZED BY COMPAL ELECTRONICS, INC. NEITHER THIS SHEET NOR THE INFORMATION IT CONTAINS MAY BE USED BY OR DISCLOSED TO ANY THIRD PARTY WITHOUT PRIOR WRITTEN CONSENT OF COMPAL ELECTRONICS, INC.

Compal Electronics, Inc.

Title: (RSVD)

Size: | Document Number: LA-G716P | Rev: 1.0

Date: Thursday, June 20, 2019 | Sheet 75 of 101

Main Function:

Reserve

Only for Dell

Security Classification	Compal Secret Data		
Issued Date	2019/06/20	Deciphered Date	2020/06/30

THIS SHEET OF ENGINEERING DRAWING IS THE PROPRIETARY PROPERTY OF COMPAL ELECTRONICS, INC. AND CONTAINS CONFIDENTIAL AND TRADE SECRET INFORMATION. THIS SHEET MAY NOT BE TRANSFERED FROM THE CUSTODY OF THE COMPETENT DIVISION OF R&D DEPARTMENT EXCEPT AS AUTHORIZED BY COMPAL ELECTRONICS, INC. NEITHER THIS SHEET NOR THE INFORMATION IT CONTAINS MAY BE USED BY OR DISCLOSED TO ANY THIRD PARTY WITHOUT PRIOR WRITTEN CONSENT OF COMPAL ELECTRONICS, INC.

Compal Electronics, Inc.

Title: (RSVD)

Size: | Document Number: LA-G716P | Rev: 1.0

Date: Thursday, June 20, 2019 | Sheet 76 of 101

Main Func = Power BTN

Low actived from KBC GPIO

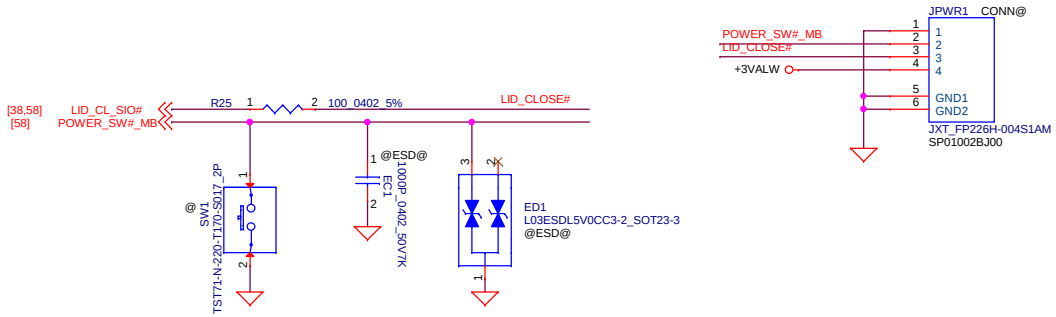

For EMI Reserved

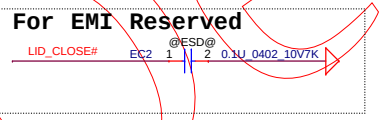

Screw hole/FD

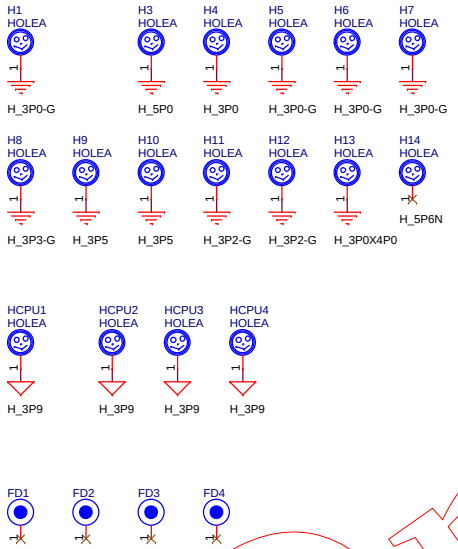

FAN

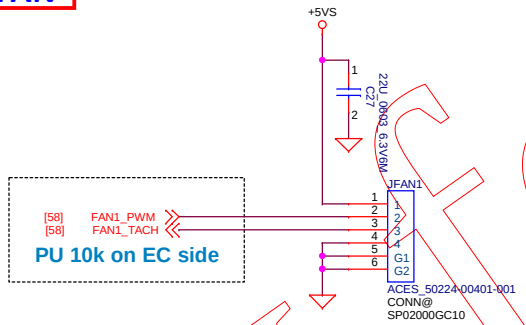

Only for Dell

Security Classification	Compal Secret Data		
Issued Date	2019/06/20	Deciphered Date	2020/06/30

THIS SHEET OF ENGINEERING DRAWING IS THE PROPRIETARY PROPERTY OF COMPAL ELECTRONICS, INC. AND CONTAINS CONFIDENTIAL AND TRADE SECRET INFORMATION. THIS SHEET MAY NOT BE TRANSFERED FROM THE CUSTODY OF THE COMPETENT DIVISION OF R&D DEPARTMENT EXCEPT AS AUTHORIZED BY COMPAL ELECTRONICS, INC. NEITHER THIS SHEET NOR THE INFORMATION IT CONTAINS MAY BE USED BY OR DISCLOSED TO ANY THIRD PARTY WITHOUT PRIOR WRITTEN CONSENT OF COMPAL ELECTRONICS, INC.

Compal Electronics, Inc.

Title: PWRBTN/PCB PN//SCREW/FAN

Size | Document Number: LA-G716P | Rev 1.0

Date: Thursday, June 20, 2019 | Sheet 77 of 101

Main Func = DC/DC

+5VS/+3VS for System

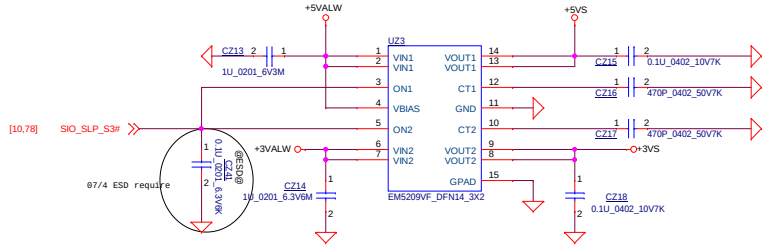

+3VALW_PCH for System

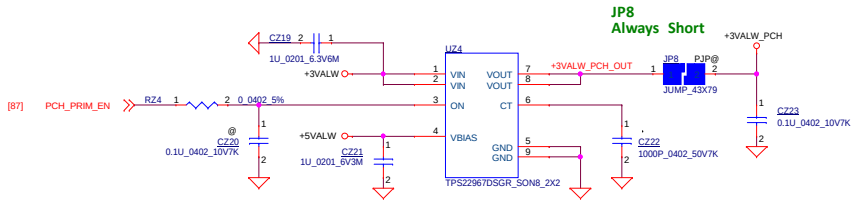

+VCCPLL_OC source

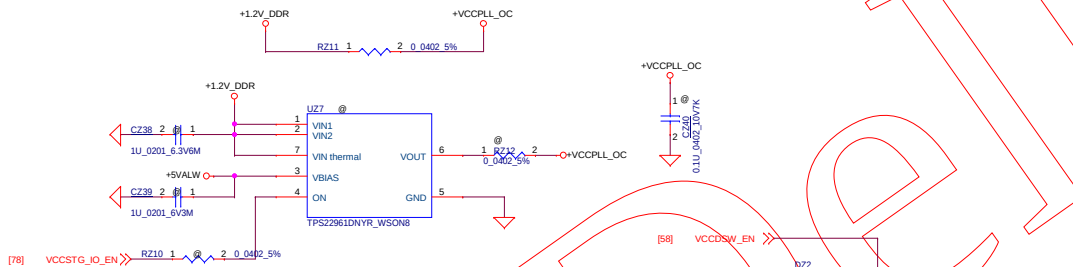

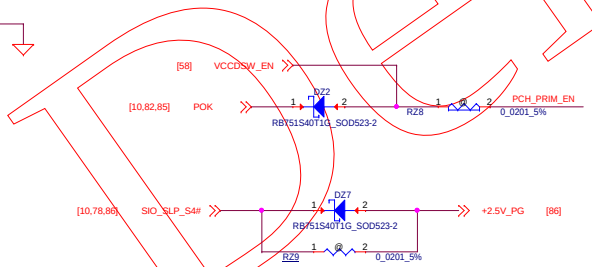

+1.05V_PRIM TO +VCCST /+VCCSTG

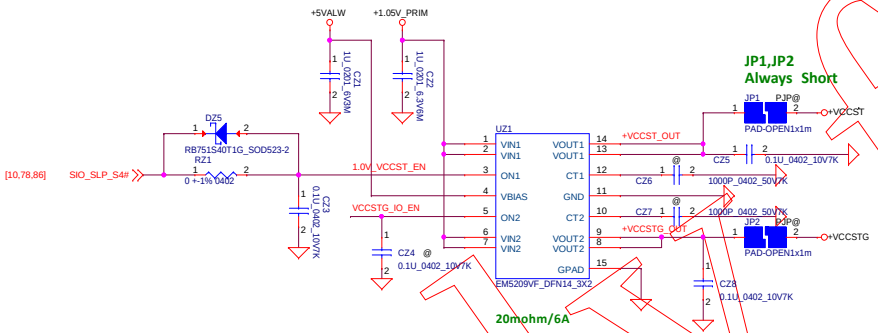

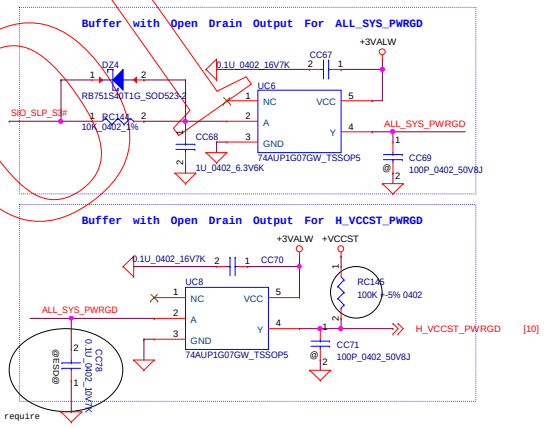

+1.05V_PRIM TO +VCCIO

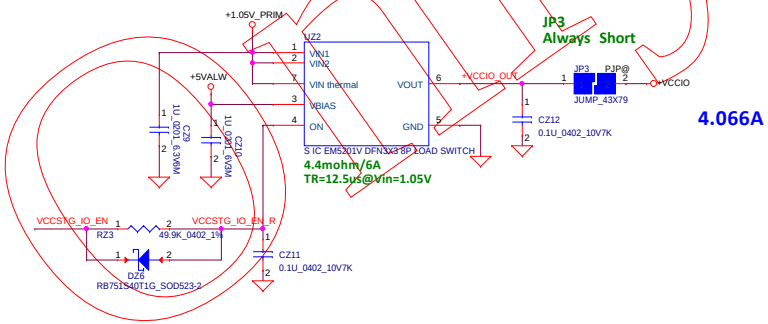

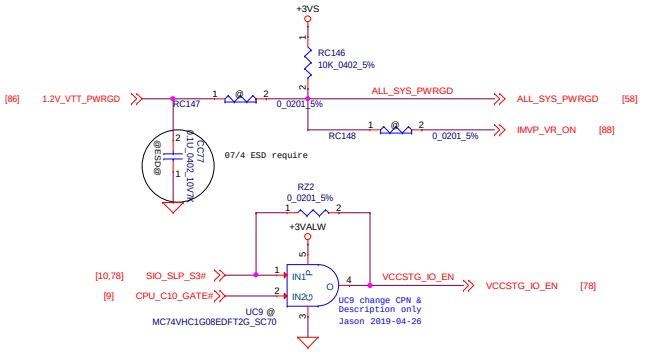

Security Classification	Compal Secret Data		
Issued Date	2019/06/20	Deciphered Date	2020/06/30

THIS SHEET OF ENGINEERING DRAWING IS THE PROPRIETARY PROPERTY OF COMPAL ELECTRONICS, INC. AND CONTAINS CONFIDENTIAL AND TRADE SECRET INFORMATION. THIS SHEET MAY NOT BE TRANSFERED FROM THE CUSTODY OF THE COMPETENT DIVISION OF R&D DEPARTMENT EXCEPT AS AUTHORIZED BY COMPAL ELECTRONICS, INC. NEITHER THIS SHEET NOR THE INFORMATION IT CONTAINS MAY BE USED BY OR DISCLOSED TO ANY THIRD PARTY WITHOUT PRIOR WRITTEN CONSENT OF COMPAL ELECTRONICS, INC.

Compal Electronics, Inc.

Title: DC/DC

Size | Document Number: LA-G716P | Rev: 1.0

Date: Thursday, June 20, 2019 | Sheet 78 of 101

Main Func = Power Monitor

RB1 Close to F1
RB2 Close to R8
RB3 Close to R8
RB4 Close to PCI23
RB5 Close to PRB01
RB6 Close to PRB01

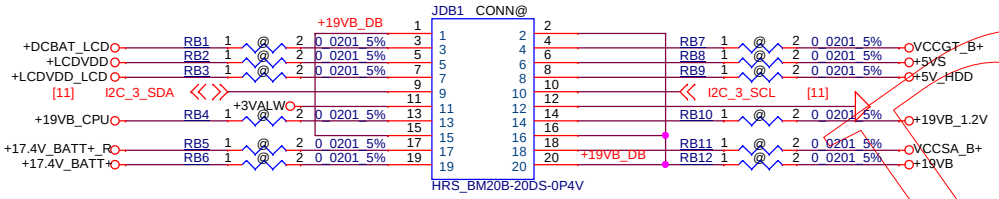

RB7 Close to PJPG01
RB8 Close to RS32
RB9 Close to RS32
RB10 Close to PJPM01
RB11 Close to PJPA01
RB12 Close to PJPA01

2	4	6	8	10	12	14	16	18	20
P1+	P1-	P2+	P2-	CLK	GND	P7-	P7+	P8-	P8+
P4+	P4-	P3+	P3-	DATA	3.3V	P6-	P6+	P5-	P5+
1	3	5	7	9	11	13	15	17	19

Only for Dell

Security Classification	Compal Secret Data		
Issued Date	2019/06/20	Deciphered Date	2020/06/30

THIS SHEET OF ENGINEERING DRAWING IS THE PROPRIETARY PROPERTY OF COMPAL ELECTRONICS, INC. AND CONTAINS CONFIDENTIAL AND TRADE SECRET INFORMATION. THIS SHEET MAY NOT BE TRANSFERED FROM THE CUSTODY OF THE COMPETENT DIVISION OF R&D DEPARTMENT EXCEPT AS AUTHORIZED BY COMPAL ELECTRONICS, INC. NEITHER THIS SHEET NOR THE INFORMATION IT CONTAINS MAY BE USED BY OR DISCLOSED TO ANY THIRD PARTY WITHOUT PRIOR WRITTEN CONSENT OF COMPAL ELECTRONICS, INC.

Compal Electronics, Inc.

Title: **Power Monitor**

Size: | Document Number: **LA-G716P** | Rev: 1.0

Date: Thursday, June 20, 2019 | Sheet 79 of 101

Main Func = XDP

PortConnector Less Routing Topology

Follow KBL DCI Link
RC152 need POP
RC156 need POP

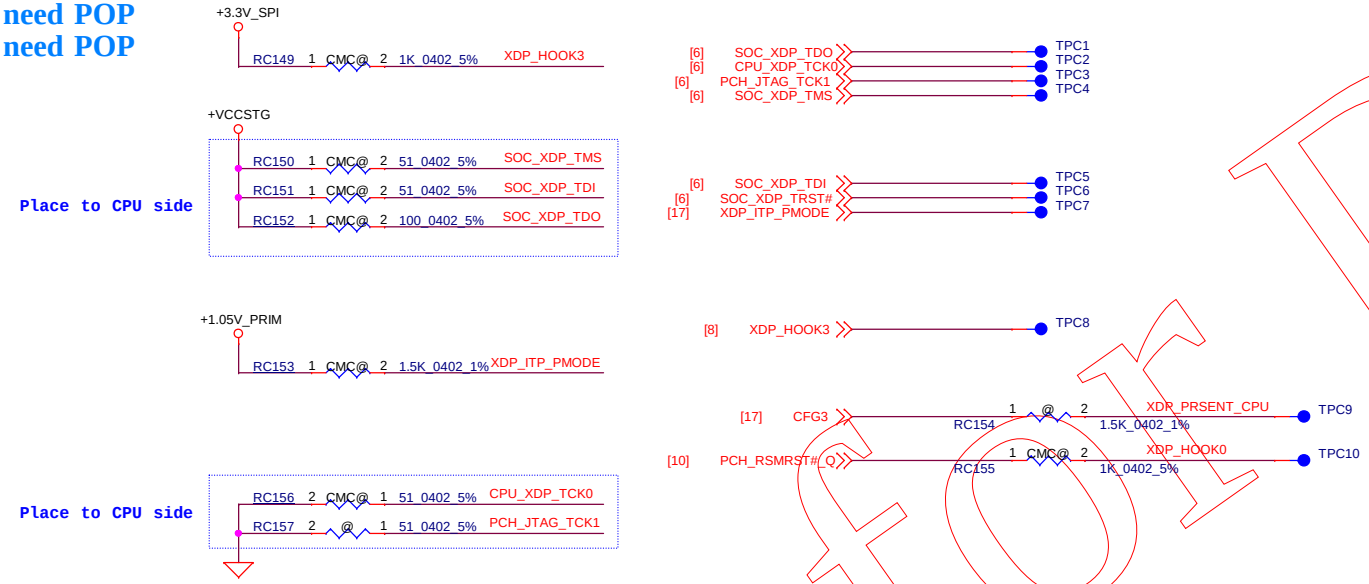

Only for Dell

Security Classification	Compal Secret Data			Compal Electronics, Inc.
Issued Date	2019/06/20	Deciphered Date	2020/06/30	Title: XDP
				Size: B; Document Number: LA-G716P; Rev: 1.0
				Date: Thursday, June 20, 2019; Sheet 80 of 101

THIS SHEET OF ENGINEERING DRAWING IS THE PROPRIETARY PROPERTY OF COMPAL ELECTRONICS, INC. AND CONTAINS CONFIDENTIAL AND TRADE SECRET INFORMATION. THIS SHEET MAY NOT BE TRANSFERED FROM THE CUSTODY OF THE COMPETENT DIVISION OF R&D DEPARTMENT EXCEPT AS AUTHORIZED BY COMPAL ELECTRONICS, INC. NEITHER THIS SHEET NOR THE INFORMATION IT CONTAINS MAY BE USED BY OR DISCLOSED TO ANY THIRD PARTY WITHOUT PRIOR WRITTEN CONSENT OF COMPAL ELECTRONICS, INC.

Reserve

Only for Dell

DELL CONFIDENTIAL/PROPRIETARY

THIS SHEET OF ENGINEERING DRAWING IS THE PROPRIETARY PROPERTY OF COMPAL ELECTRONICS, INC. AND CONTAINS CONFIDENTIAL AND TRADE SECRET INFORMATION. THIS SHEET MAY NOT BE TRANSFERED FROM THE CUSTODY OF THE COMPETENT DIVISION OF R&D DEPARTMENT EXCEPT AS AUTHORIZED BY COMPAL ELECTRONICS, INC. NEITHER THIS SHEET NOR THE INFORMATION IT CONTAINS

	Compal Electronics, Inc.	
	Title: Reserve for PWR	
	Size: Document Number	Rev 1.0
	Date: Thursday, June 20, 2019	Sheet 81 of 100

Main Func = DCIN CONN

SPEC = 6KV

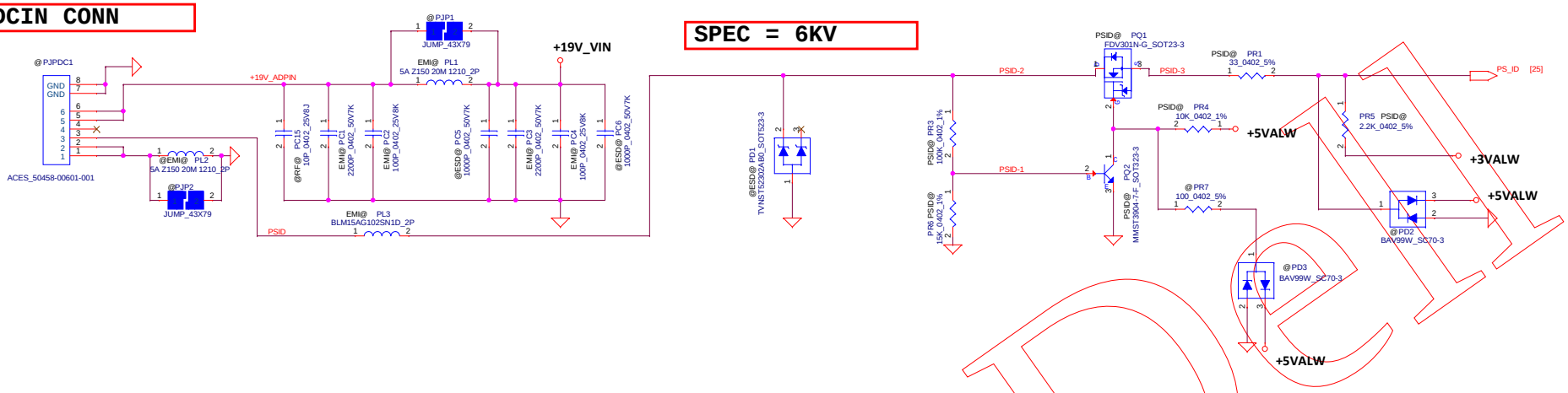

Battery Bat Side

PIN1 GND
PIN2 GND
PIN3 GND
PIN4 SYS_PRES
PIN5 BATT_PRS
PIN6 DAT_SMB
PIN7 CLK_SMB
PIN8 Bat t+
PIN9 Bat t+
PIN10 Bat t+
SP021412220

ACES_50458-01001-P01_10P-T

Only for Dell

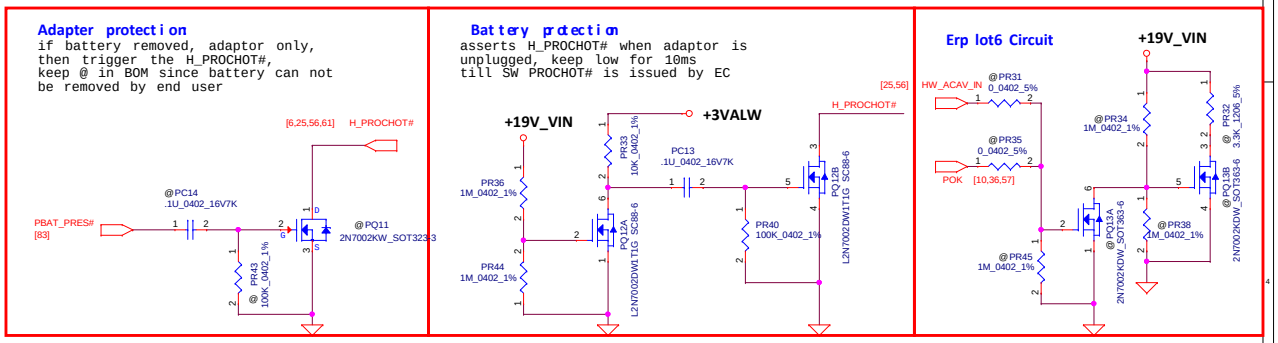

DELL CONFIDENTIAL/PROPRIETARY

Security Classification	Compal Secret Data		
Issued Date	2019/06/20	Deciphered Date	2020/06/30

THIS SHEET OF ENGINEERING DRAWING IS THE PROPRIETARY PROPERTY OF COMPAL ELECTRONICS, INC. AND CONTAINS CONFIDENTIAL AND TRADE SECRET INFORMATION. THIS SHEET MAY NOT BE TRANSFERED FROM THE CUSTODY OF THE COMPETENT DIVISION OF R&D DEPARTMENT EXCEPT AS AUTHORIZED BY COMPAL ELECTRONICS, INC. NEITHER THIS SHEET NOR THE INFORMATION IT CONTAINS MAY BE USED BY OR DISCLOSED TO ANY THIRD PARTY WITHOUT PRIOR WRITTEN CONSENT OF COMPAL ELECTRONICS, INC.

Compal Electronics, Inc.

Title: **PWR_DCIN CONN**

Size | Document Number | Rev 1.0

Date: Thursday, June 20, 2019 | Sheet 82 of 100

Main Func = BATT CONN

Battery Bat Side

PIN1 GND
PIN2 GND
PIN3 GND
PIN4 SYS_PRES
PIN5 BATT_PRS
PIN6 DAT_SMB
PIN7 CLK_SMB
PIN8 Bat t+
PIN9 Bat t+
PIN10 Bat t+
SP021412220

ACES_50458-01001-P01_10P-T

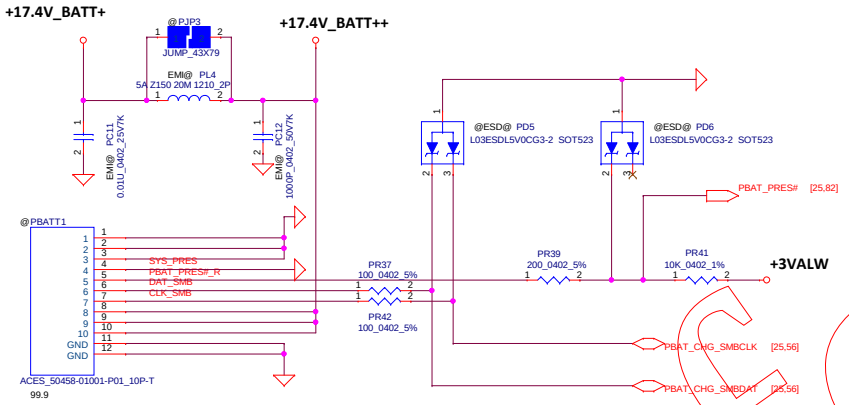

Only for Dell

DELL CONFIDENTIAL/PROPRIETARY

Security Classification	Compal Secret Data		
Issued Date	2019/06/20	Deciphered Date	2020/06/30

THIS SHEET OF ENGINEERING DRAWING IS THE PROPRIETARY PROPERTY OF COMPAL ELECTRONICS, INC. AND CONTAINS CONFIDENTIAL AND TRADE SECRET INFORMATION. THIS SHEET MAY NOT BE TRANSFERED FROM THE CUSTODY OF THE COMPETENT DIVISION OF R&D DEPARTMENT EXCEPT AS AUTHORIZED BY COMPAL ELECTRONICS, INC. NEITHER THIS SHEET NOR THE INFORMATION IT CONTAINS MAY BE USED BY OR DISCLOSED TO ANY THIRD PARTY WITHOUT PRIOR WRITTEN CONSENT OF COMPAL ELECTRONICS, INC.

Compal Electronics, Inc.

Title: **PWR_BATT CONN**

Size | Document Number | Rev 1.0

Date: Thursday, June 20, 2019 | Sheet 83 of 100

Main Func = CHARGER

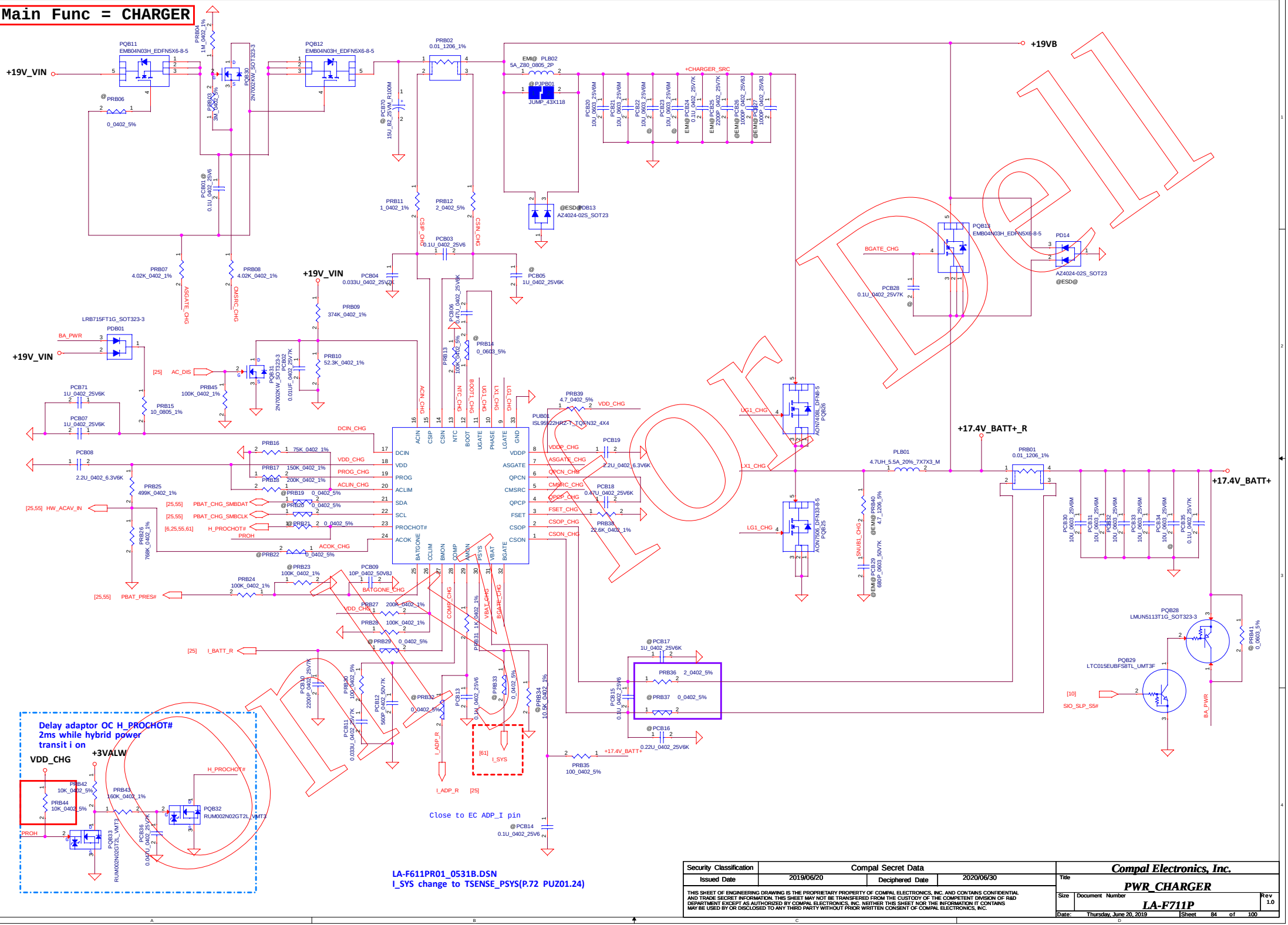

Security Classification	Compal Secret Data		
Issued Date	2019/06/20	Deciphered Date	2020/06/30

THIS SHEET OF ENGINEERING DRAWING IS THE PROPRIETARY PROPERTY OF COMPAL ELECTRONICS, INC. AND CONTAINS CONFIDENTIAL AND TRADE SECRET INFORMATION. THIS SHEET MAY NOT BE TRANSFERRED FROM THE CUSTODY OF THE COMPETENT DIVISION OF R&D DEPARTMENT EXCEPT AS AUTHORIZED BY COMPAL ELECTRONICS, INC. NEITHER THIS SHEET NOR THE INFORMATION IT CONTAINS MAY BE USED BY OR DISCLOSED TO ANY THIRD PARTY WITHOUT PRIOR WRITTEN CONSENT OF COMPAL ELECTRONICS, INC.

Compal Electronics, Inc.

Title: **PWR_CHARGER**

Size | Document Number: **LA-F711P** | Rev 1.0

Date: Thursday, June 20, 2019 | Sheet 84 of 100

Main Func = 3.3VALWP/5VALWP

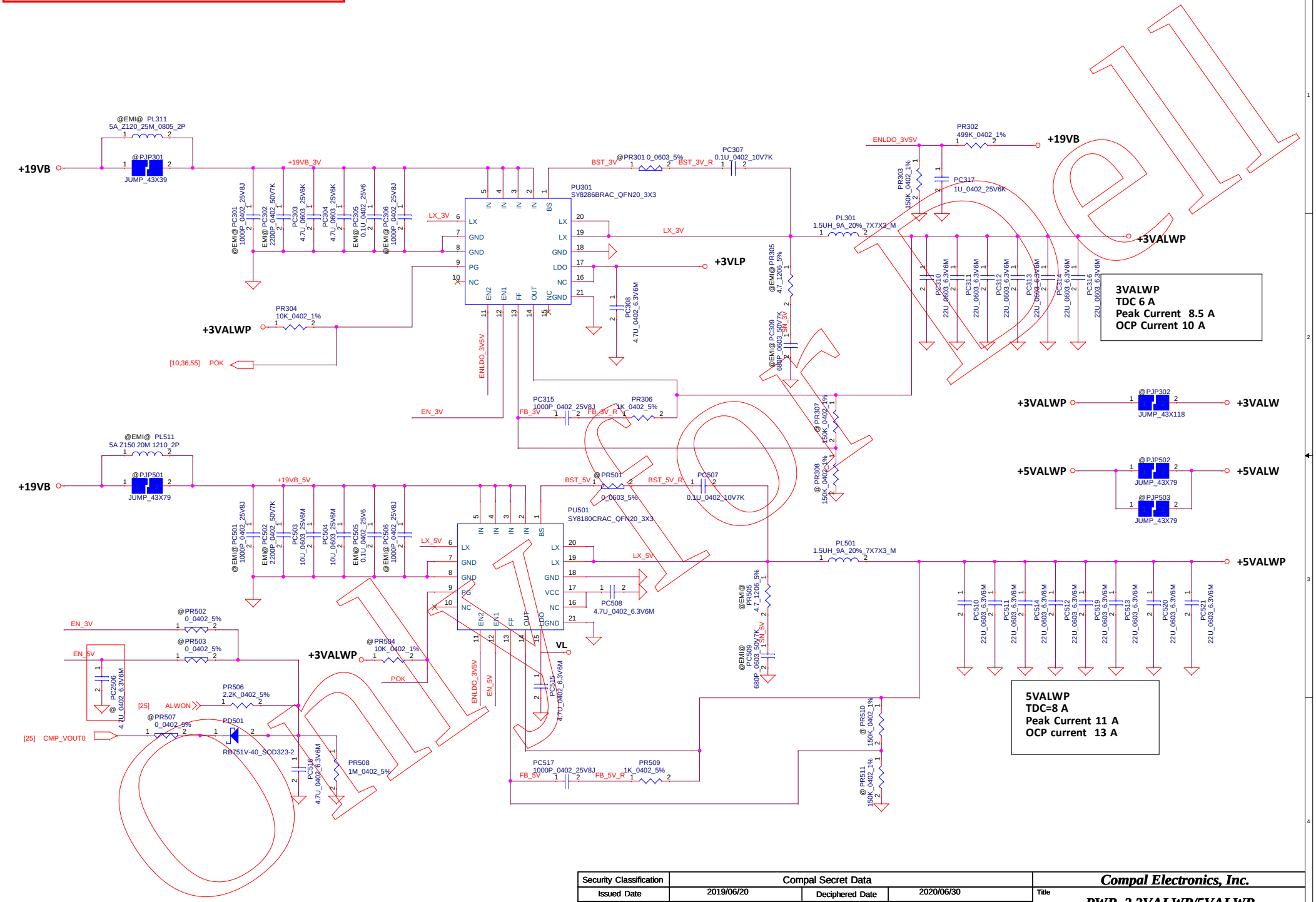

Security Classification	Compal Secret Data		
Issued Date	2019/06/20	Deciphered Date	2020/06/30

THIS SHEET OF ENGINEERING DRAWING IS THE PROPRIETARY PROPERTY OF COMPAL ELECTRONICS, INC. AND CONTAINS CONFIDENTIAL AND TRADE SECRET INFORMATION. THIS SHEET MAY NOT BE TRANSFERED FROM THE CUSTODY OF THE COMPETENT DIVISION OF R&D DEPARTMENT EXCEPT AS AUTHORIZED BY COMPAL ELECTRONICS, INC. NEITHER THIS SHEET NOR THE INFORMATION IT CONTAINS MAY BE USED BY OR DISCLOSED TO ANY THIRD PARTY WITHOUT PRIOR WRITTEN CONSENT OF COMPAL ELECTRONICS, INC.

Compal Electronics, Inc.

Title: **PWR_3.3VALWP/5VALWP**

Size | Document Number | Rev 1.0

Date: Thursday, June 20, 2019 | Sheet 85 of 100

Main Func = +1.2V_DDR/+0.6V_DDR_VTT/+2.5VP

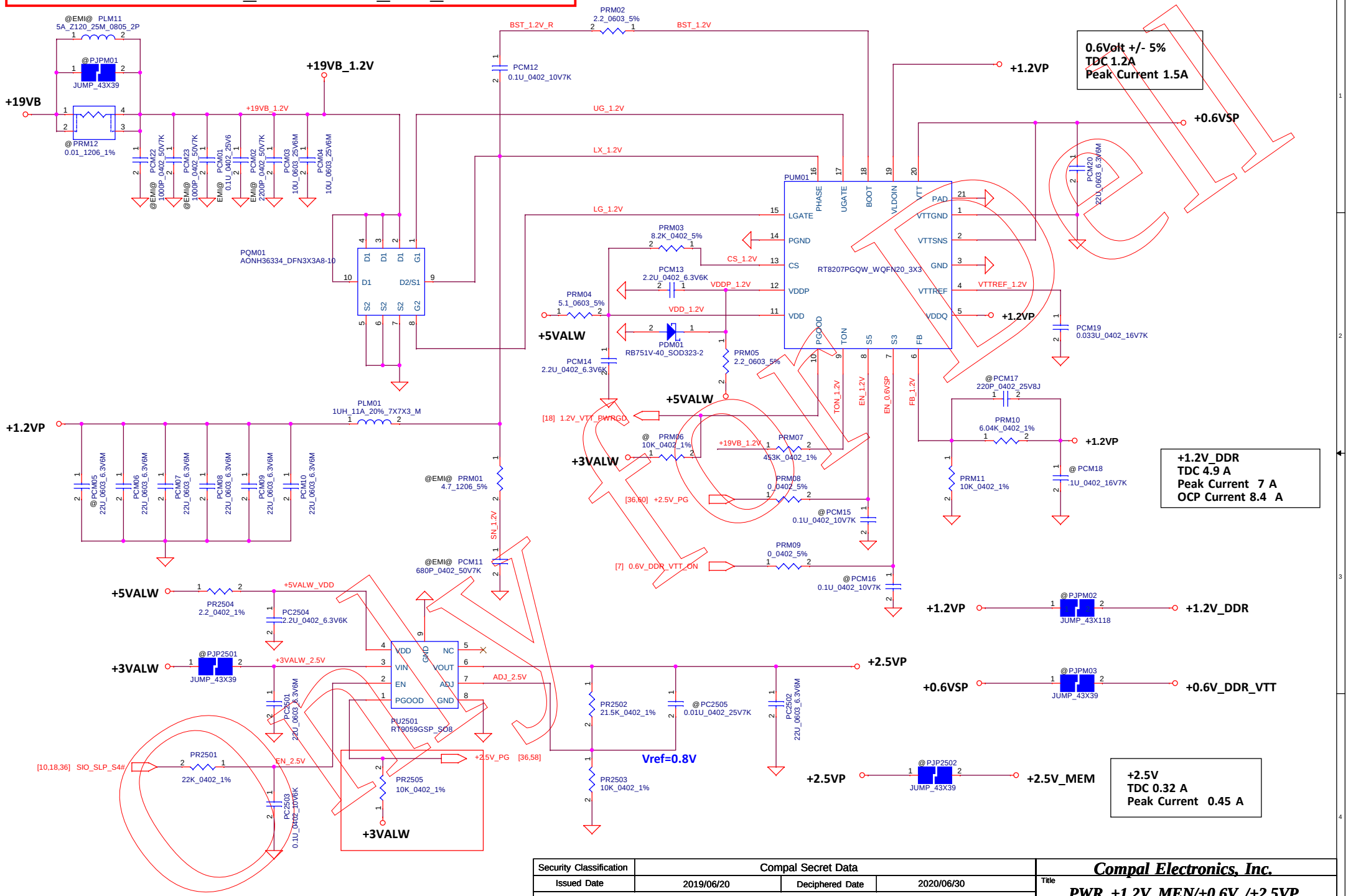

Security Classification	Compal Secret Data		
Issued Date	2019/06/20	Deciphered Date	2020/06/30

THIS SHEET OF ENGINEERING DRAWING IS THE PROPRIETARY PROPERTY OF COMPAL ELECTRONICS, INC. AND CONTAINS CONFIDENTIAL AND TRADE SECRET INFORMATION. THIS SHEET MAY NOT BE TRANSFERED FROM THE CUSTODY OF THE COMPETENT DIVISION OF R&D DEPARTMENT EXCEPT AS AUTHORIZED BY COMPAL ELECTRONICS, INC. NEITHER THIS SHEET NOR THE INFORMATION IT CONTAINS MAY BE USED BY OR DISCLOSED TO ANY THIRD PARTY WITHOUT PRIOR WRITTEN CONSENT OF COMPAL ELECTRONICS, INC.

Compal Electronics, Inc.

Title: **PWR_+1.2V_MEN/+0.6V_/+2.5VP**

Size: Custom | Document Number | Rev 1.0

Date: Thursday, June 20, 2019 | Sheet 86 of 100

Main Func = +1.8VALWP /+1.05VALWP

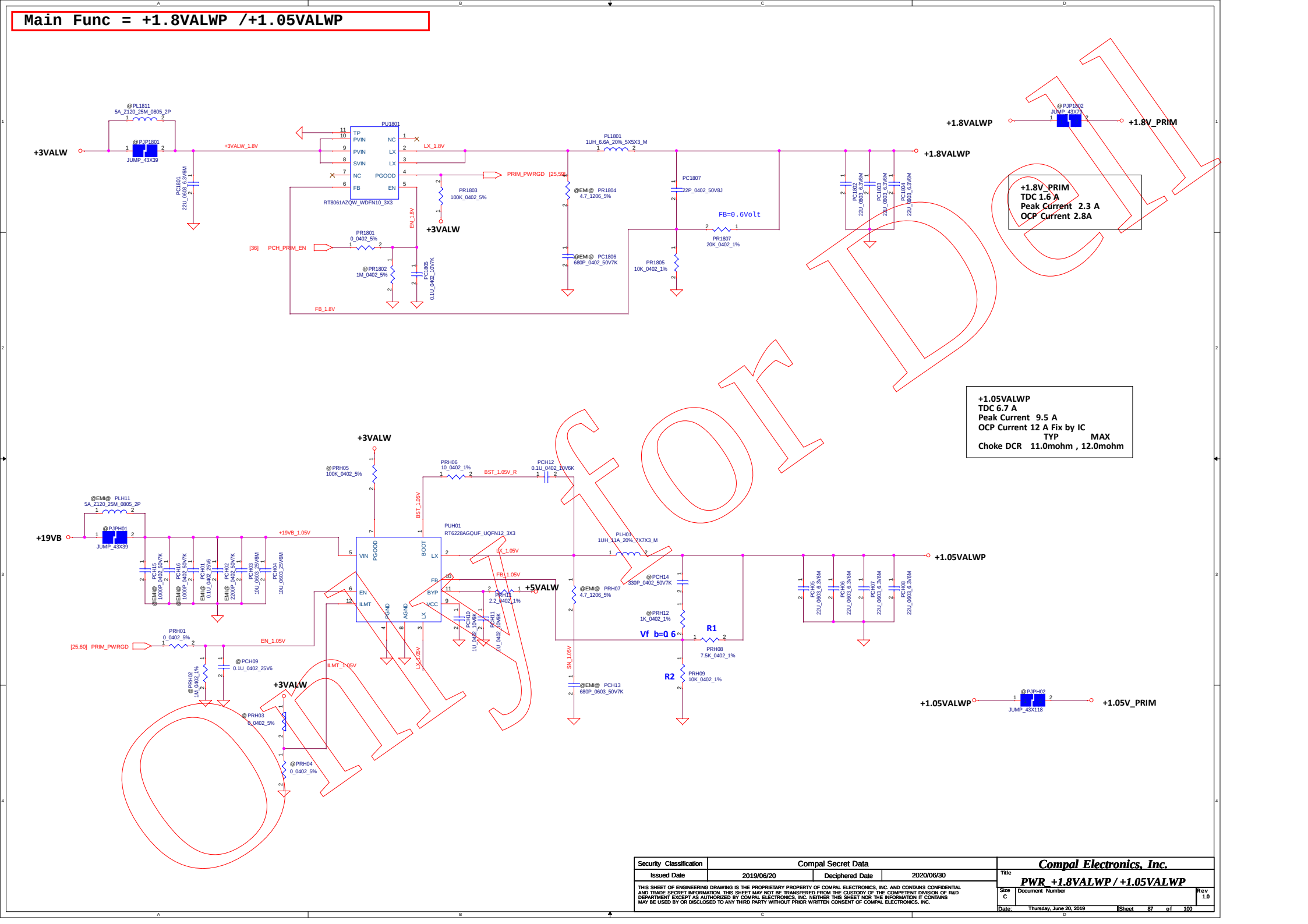

Security Classification	Compal Secret Data		
Issued Date	2019/06/20	Deciphered Date	2020/06/30

THIS SHEET OF ENGINEERING DRAWING IS THE PROPRIETARY PROPERTY OF COMPAL ELECTRONICS, INC. AND CONTAINS CONFIDENTIAL AND TRADE SECRET INFORMATION. THIS SHEET MAY NOT BE TRANSFERRED FROM THE CUSTODY OF THE COMPETENT DIVISION OF R&D DEPARTMENT EXCEPT AS AUTHORIZED BY COMPAL ELECTRONICS, INC. NEITHER THIS SHEET NOR THE INFORMATION IT CONTAINS MAY BE USED BY OR DISCLOSED TO ANY THIRD PARTY WITHOUT PRIOR WRITTEN CONSENT OF COMPAL ELECTRONICS, INC.

Compal Electronics, Inc.

Title: PWR_+1.8VALWP / +1.05VALWP

Size: C | Document Number | Rev: 1.0

Date: Thursday, June 20, 2019 | Sheet 87 of 100

Main Func = CPU

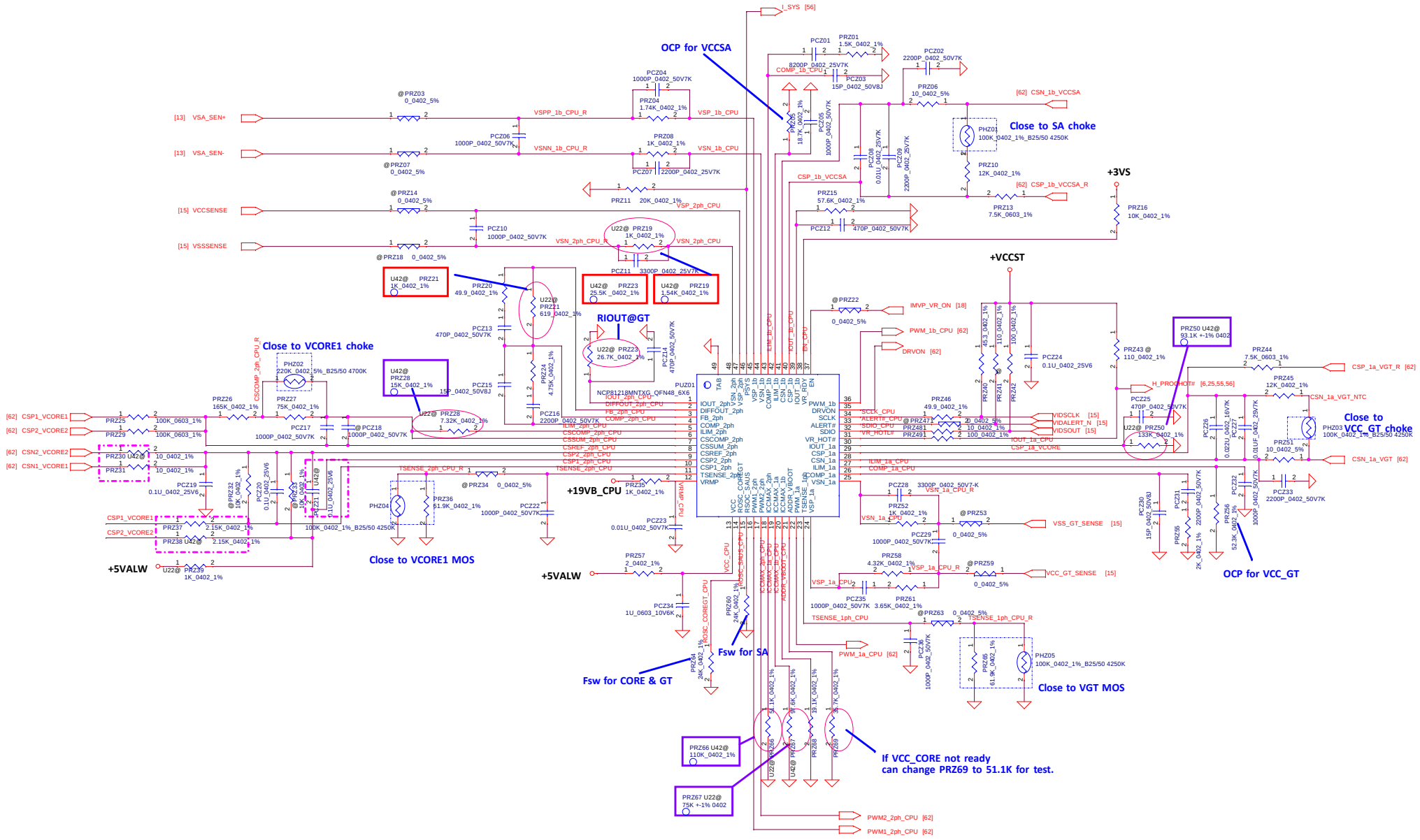

https://shop62935598.taobao.com

Security Classification	Compal Secret Data		
Issued Date	2019/06/20	Deciphered Date	2020/06/30

THIS SHEET OF ENGINEERING DRAWING IS THE PROPRIETARY PROPERTY OF COMPAL ELECTRONICS, INC. AND CONTAINS CONFIDENTIAL AND TRADE SECRET INFORMATION. THIS SHEET MAY NOT BE TRANSFERED FROM THE CUSTODY OF THE COMPETENT DIVISION OF R&D DEPARTMENT EXCEPT AS AUTHORIZED BY COMPAL ELECTRONICS, INC. NEITHER THIS SHEET NOR THE INFORMATION IT CONTAINS MAY BE USED BY OR DISCLOSED TO ANY THIRD PARTY WITHOUT PRIOR WRITTEN CONSENT OF COMPAL ELECTRONICS, INC.

Compal Electronics, Inc.

Title: **PWR_CPU**

Size | Document Number | Rev 1.0

Date: Thursday, June 20, 2019 | Sheet 88 of 100

Main Func = CPUcore IA/GT/SA

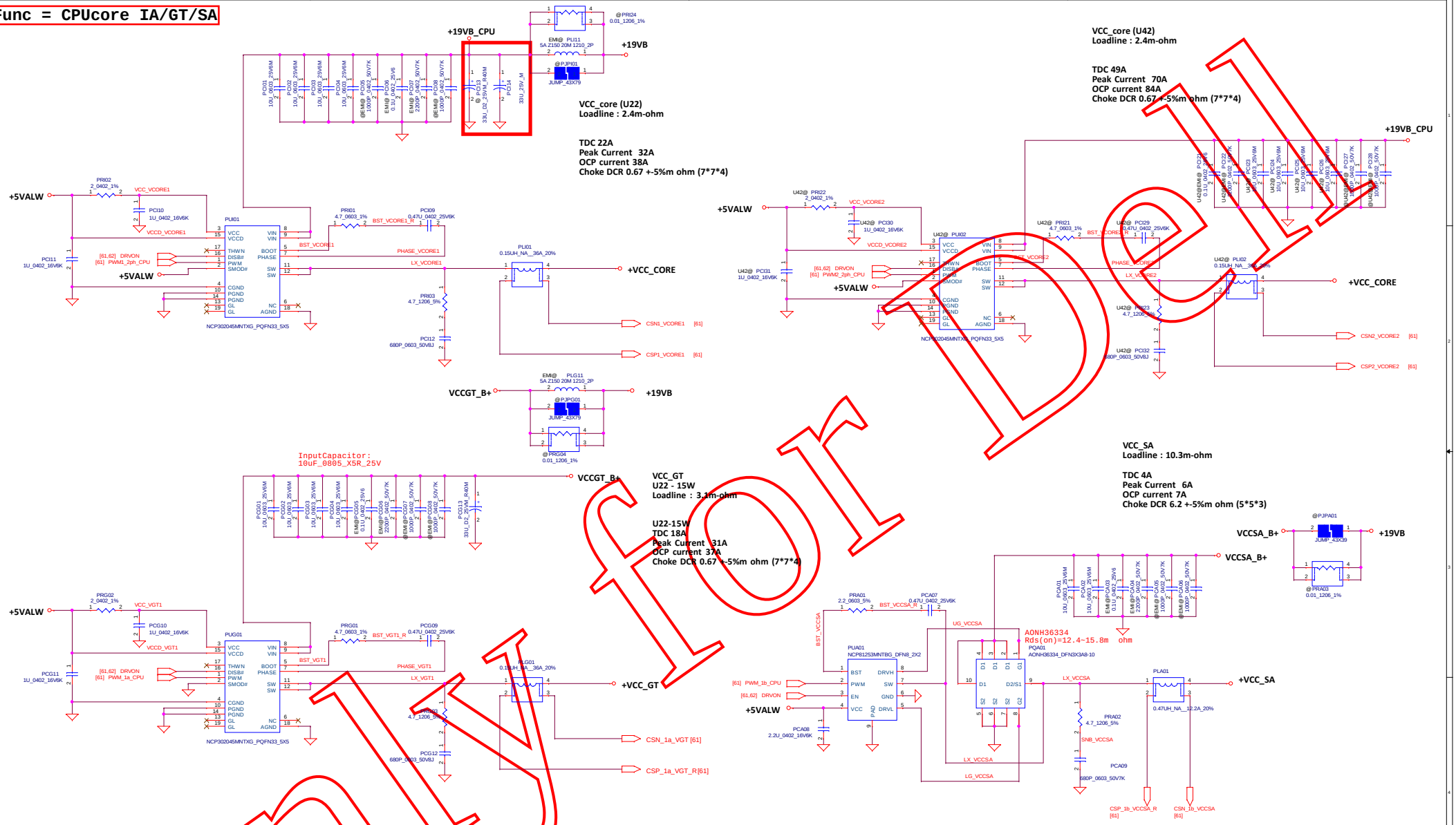

Only for Dell

Security Classification	Compal Secret Data		
Issued Date	2019/06/20	Deciphered Date	2020/06/30

THIS SHEET OF ENGINEERING DRAWING IS THE PROPRIETARY PROPERTY OF COMPAL ELECTRONICS, INC. AND CONTAINS CONFIDENTIAL AND TRADE SECRET INFORMATION. THIS SHEET MAY NOT BE TRANSFERED FROM THE CUSTODY OF THE COMPETENT DIVISION OF R&D DEPARTMENT EXCEPT AS AUTHORIZED BY COMPAL ELECTRONICS, INC. NEITHER THIS SHEET NOR THE INFORMATION IT CONTAINS MAY BE USED BY OR DISCLOSED TO ANY THIRD PARTY WITHOUT PRIOR WRITTEN CONSENT OF COMPAL ELECTRONICS, INC.

Compal Electronics, Inc.

Title: PWR_CPUcore IA/GT/SA

Size | Document Number | Rev 1.0

Date: Thursday, June 20, 2019 | Sheet 89 of 100

Main Func = CPU/ VGA / SA MLCC

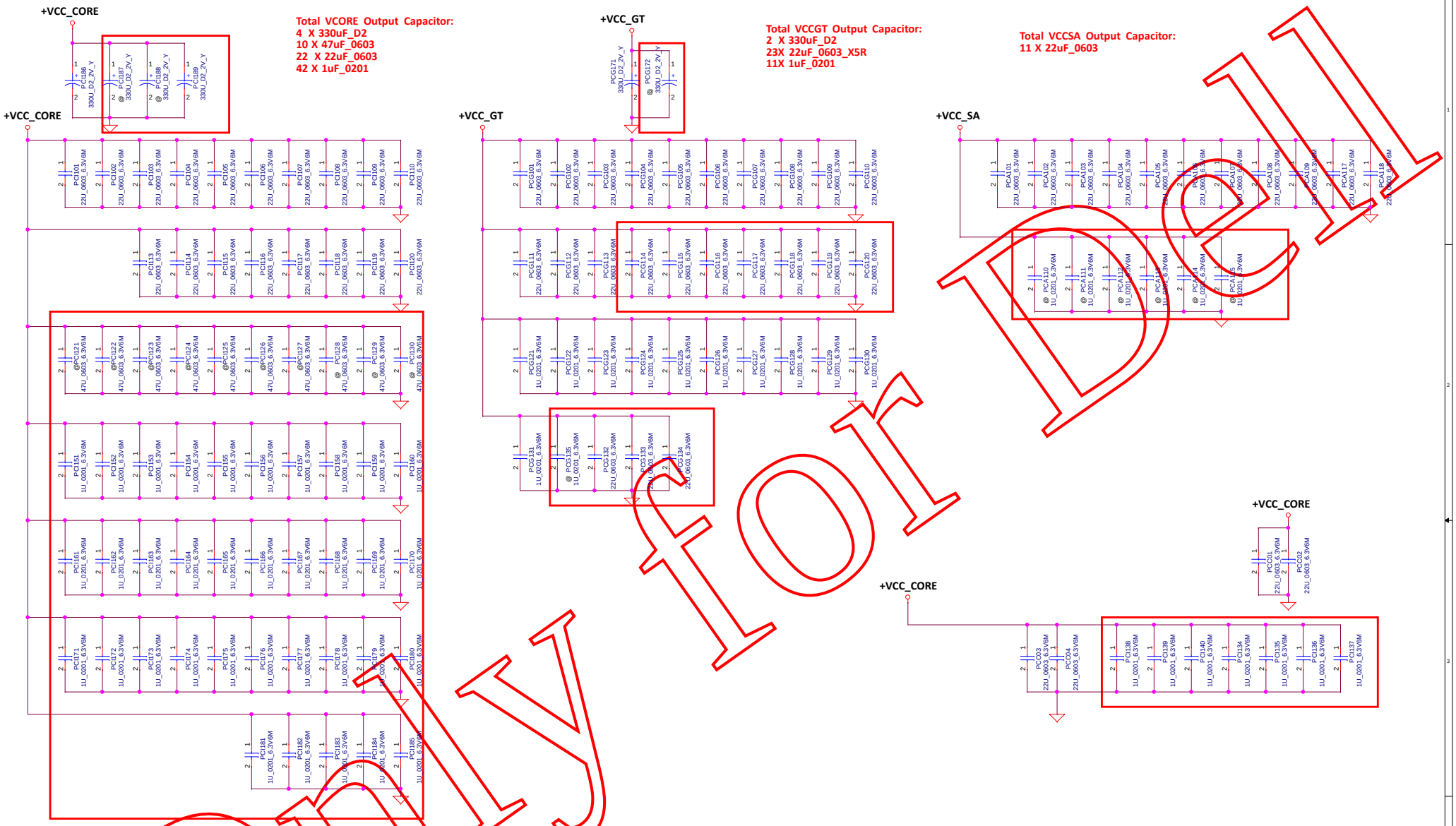

Only for Dell

Security Classification	Compal Secret Data		
Issued Date	2019/06/20	Deciphered Date	2020/06/30

THIS SHEET OF ENGINEERING DRAWING IS THE PROPRIETARY PROPERTY OF COMPAL ELECTRONICS, INC. AND CONTAINS CONFIDENTIAL AND TRADE SECRET INFORMATION. THIS SHEET MAY NOT BE TRANSFERED FROM THE CUSTODY OF THE COMPETENT DIVISION OF R&D DEPARTMENT EXCEPT AS AUTHORIZED BY COMPAL ELECTRONICS, INC. NEITHER THIS SHEET NOR THE INFORMATION IT CONTAINS MAY BE USED BY OR DISCLOSED TO ANY THIRD PARTY WITHOUT PRIOR WRITTEN CONSENT OF COMPAL ELECTRONICS, INC.

Compal Electronics, Inc.

Title: **PWR_CPU / VGA / SA MLCC**

Size | Document Number | Rev 1.0

Date: Thursday, June 20, 2019 | Sheet 90 of 100

Only for Dell

DELL CONFIDENTIAL/PROPRIETARY

THIS SHEET OF ENGINEERING DRAWING IS THE PROPRIETARY PROPERTY OF COMPAL ELECTRONICS, INC. AND CONTAINS CONFIDENTIAL AND TRADE SECRET INFORMATION. THIS SHEET MAY NOT BE TRANSFERED FROM THE CUSTODY OF THE COMPETENT DIVISION OF R&D DEPARTMENT EXCEPT AS AUTHORIZED BY COMPAL ELECTRONICS, INC. NEITHER THIS SHEET NOR THE INFORMATION IT CONTAINS

	Compal Electronics, Inc.	
	Title: Reserve for PWR	
Size	Document Number	Rev 1.0
Date: Thursday, June 20, 2019	Sheet 91 of 100	

Main Func = VGA CORE

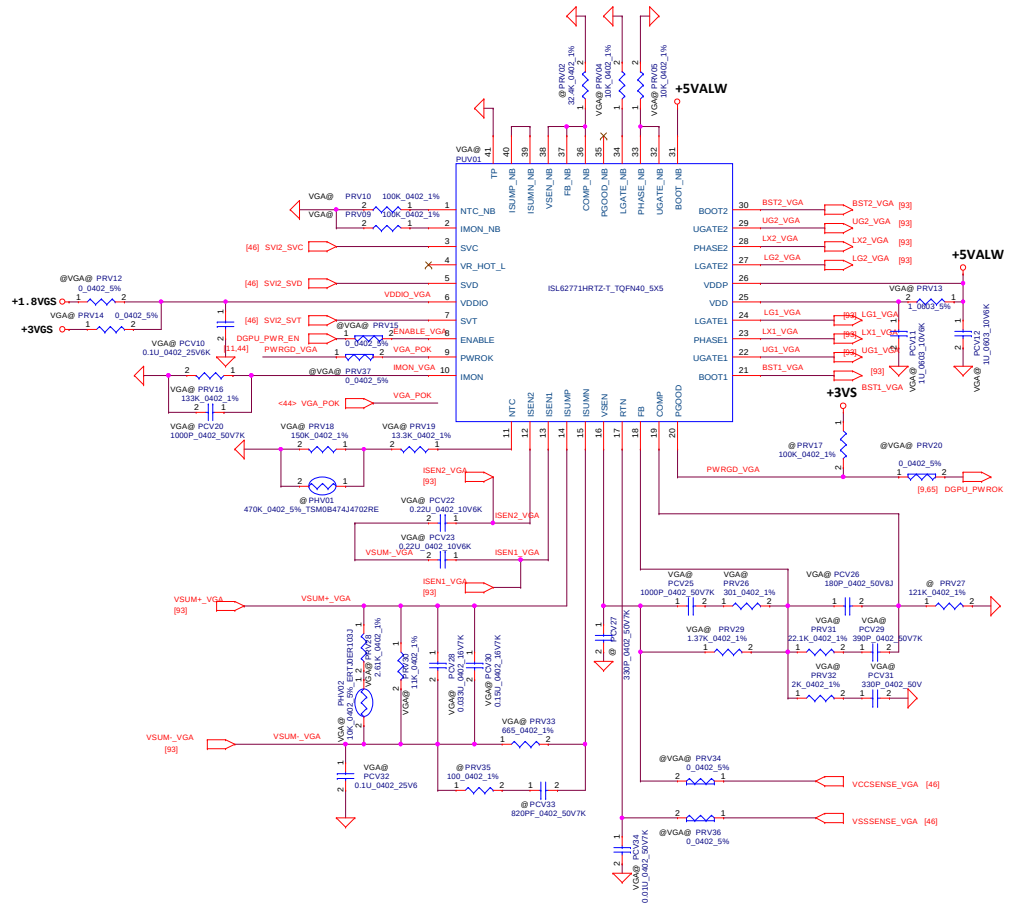

VGA_CORE (M2-50)
TDC 30A
Peak Current(EDC) 60A
OCP current 72A

FSW=300kHz

https://shop62935598.taobao.com

Security Classification	Compal Secret Data		
Issued Date	2019/06/20	Deciphered Date	2020/06/30

THIS SHEET OF ENGINEERING DRAWING IS THE PROPRIETARY PROPERTY OF COMPAL ELECTRONICS, INC. AND CONTAINS CONFIDENTIAL AND TRADE SECRET INFORMATION. THIS SHEET MAY NOT BE TRANSFERED FROM THE CUSTODY OF THE COMPETENT DIVISION OF R&D DEPARTMENT EXCEPT AS AUTHORIZED BY COMPAL ELECTRONICS, INC. NEITHER THIS SHEET NOR THE INFORMATION IT CONTAINS MAY BE USED BY OR DISCLOSED TO ANY THIRD PARTY WITHOUT PRIOR WRITTEN CONSENT OF COMPAL ELECTRONICS, INC.

Compal Electronics, Inc.

Title: **PWR_VGA_CORE**

Size | Document Number | Rev 1.0

Date: Thursday, June 20, 2019 | Sheet 92 of 100

Main Func = VGA CORE

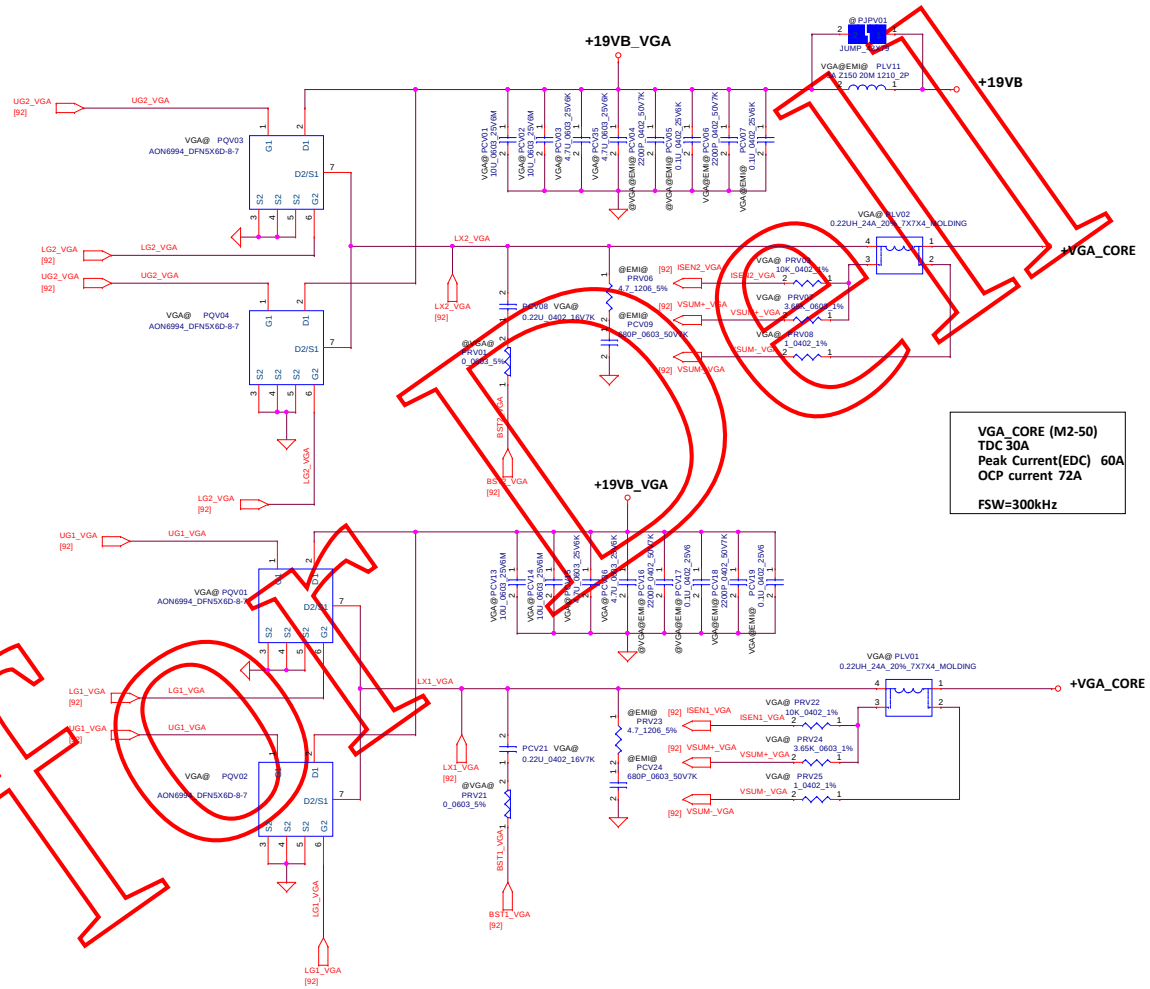

Only for ODCI

Security Classification	Compal Secret Data		
Issued Date	2019/06/20	Deciphered Date	2020/06/30

THIS SHEET OF ENGINEERING DRAWING IS THE PROPRIETARY PROPERTY OF COMPAL ELECTRONICS, INC. AND CONTAINS CONFIDENTIAL AND TRADE SECRET INFORMATION. THIS SHEET MAY NOT BE TRANSFERED FROM THE CUSTODY OF THE COMPETENT DIVISION OF R&D DEPARTMENT EXCEPT AS AUTHORIZED BY COMPAL ELECTRONICS, INC. NEITHER THIS SHEET NOR THE INFORMATION IT CONTAINS MAY BE USED BY OR DISCLOSED TO ANY THIRD PARTY WITHOUT PRIOR WRITTEN CONSENT OF COMPAL ELECTRONICS, INC.

Compal Electronics, Inc.

Title: **GPU_Decoupling**

Size | Document Number | Rev 1.0

Date: Thursday, June 20, 2019 | Sheet 93 of 100

Main Func = +1.35VGPUP

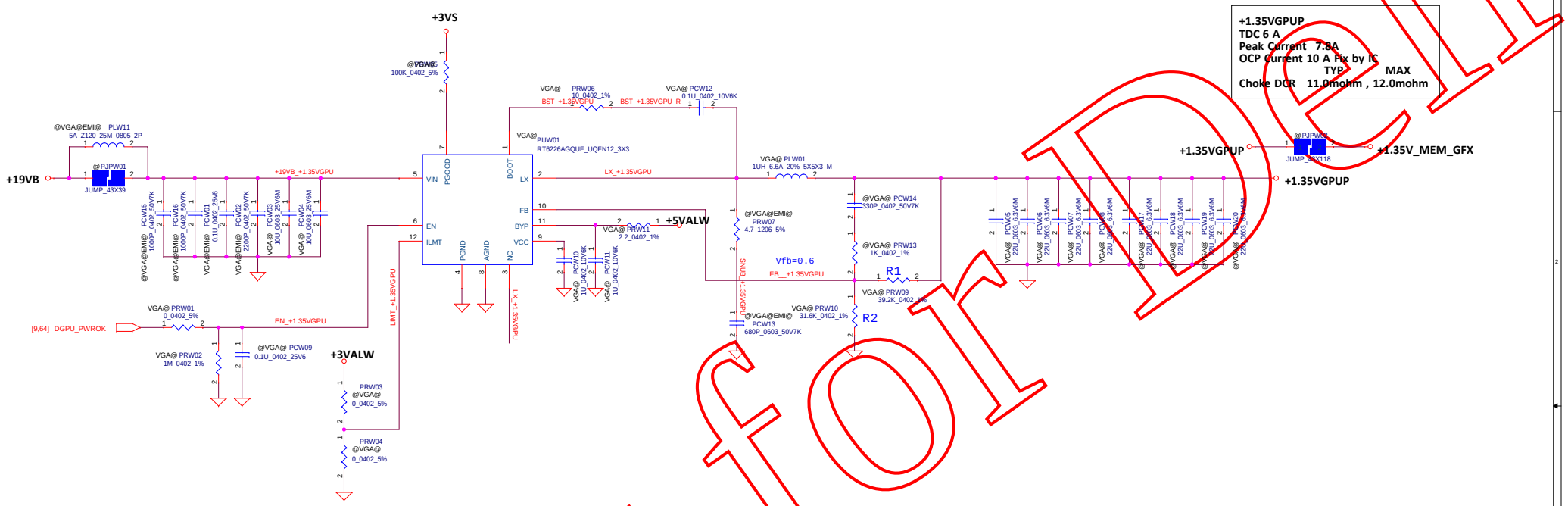

Only for Dell

Security Classification	Compal Secret Data		
Issued Date	2019/06/20	Deciphered Date	2020/06/30

THIS SHEET OF ENGINEERING DRAWING IS THE PROPRIETARY PROPERTY OF COMPAL ELECTRONICS, INC. AND CONTAINS CONFIDENTIAL AND TRADE SECRET INFORMATION. THIS SHEET MAY NOT BE TRANSFERED FROM THE CUSTODY OF THE COMPETENT DIVISION OF R&D DEPARTMENT EXCEPT AS AUTHORIZED BY COMPAL ELECTRONICS, INC. NEITHER THIS SHEET NOR THE INFORMATION IT CONTAINS MAY BE USED BY OR DISCLOSED TO ANY THIRD PARTY WITHOUT PRIOR WRITTEN CONSENT OF COMPAL ELECTRONICS, INC.

Compal Electronics, Inc.

Title: **PWR_+1.35VGPUP**

Size | Document Number | Rev 1.0

Date: Thursday, June 20, 2019 | Sheet 94 of 100

Reserve

Only for Dell

DELL CONFIDENTIAL/PROPRIETARY

THIS SHEET OF ENGINEERING DRAWING IS THE PROPRIETARY PROPERTY OF COMPAL ELECTRONICS, INC. AND CONTAINS CONFIDENTIAL AND TRADE SECRET INFORMATION. THIS SHEET MAY NOT BE TRANSFERED FROM THE CUSTODY OF THE COMPETENT DIVISION OF R&D DEPARTMENT EXCEPT AS AUTHORIZED BY COMPAL ELECTRONICS, INC. NEITHER THIS SHEET NOR THE INFORMATION IT CONTAINS

	Compal Electronics, Inc.	
	Title: Reserve for PWR	
Size	Document Number	Rev 1.0
Date: Thursday, June 20, 2019	Sheet 95 of 100	

Reserve

Only for Dell

DELL CONFIDENTIAL/PROPRIETARY

THIS SHEET OF ENGINEERING DRAWING IS THE PROPRIETARY PROPERTY OF COMPAL ELECTRONICS, INC. AND CONTAINS CONFIDENTIAL AND TRADE SECRET INFORMATION. THIS SHEET MAY NOT BE TRANSFERED FROM THE CUSTODY OF THE COMPETENT DIVISION OF R&D DEPARTMENT EXCEPT AS AUTHORIZED BY COMPAL ELECTRONICS, INC. NEITHER THIS SHEET NOR THE INFORMATION IT CONTAINS

	Compal Electronics, Inc.	
	Title: Reserve for PWR	
Size	Document Number	Rev 1.0
Date: Thursday, June 20, 2019	Sheet 96 of 100	

Reserve

Only for Dell

DELL CONFIDENTIAL/PROPRIETARY

THIS SHEET OF ENGINEERING DRAWING IS THE PROPRIETARY PROPERTY OF COMPAL ELECTRONICS, INC. AND CONTAINS CONFIDENTIAL AND TRADE SECRET INFORMATION. THIS SHEET MAY NOT BE TRANSFERED FROM THE CUSTODY OF THE COMPETENT DIVISION OF R&D DEPARTMENT EXCEPT AS AUTHORIZED BY COMPAL ELECTRONICS, INC. NEITHER THIS SHEET NOR THE INFORMATION IT CONTAINS

	Compal Electronics, Inc.	
	Title: Reserve for PWR	
Size	Document Number	Rev 1.0
Date: Thursday, June 20, 2019	Sheet 97 of 100	

Reserve

Only for Dell

DELL CONFIDENTIAL/PROPRIETARY

THIS SHEET OF ENGINEERING DRAWING IS THE PROPRIETARY PROPERTY OF COMPAL ELECTRONICS, INC. AND CONTAINS CONFIDENTIAL AND TRADE SECRET INFORMATION. THIS SHEET MAY NOT BE TRANSFERED FROM THE CUSTODY OF THE COMPETENT DIVISION OF R&D DEPARTMENT EXCEPT AS AUTHORIZED BY COMPAL ELECTRONICS, INC. NEITHER THIS SHEET NOR THE INFORMATION IT CONTAINS

	Compal Electronics, Inc.	
	Title: Reserve for PWR	
Size	Document Number	Rev 1.0
Date: Thursday, June 20, 2019	Sheet 98 of 100	

Reserve

Only for Dell

DELL CONFIDENTIAL/PROPRIETARY

THIS SHEET OF ENGINEERING DRAWING IS THE PROPRIETARY PROPERTY OF COMPAL ELECTRONICS, INC. AND CONTAINS CONFIDENTIAL AND TRADE SECRET INFORMATION. THIS SHEET MAY NOT BE TRANSFERED FROM THE CUSTODY OF THE COMPETENT DIVISION OF R&D DEPARTMENT EXCEPT AS AUTHORIZED BY COMPAL ELECTRONICS, INC. NEITHER THIS SHEET NOR THE INFORMATION IT CONTAINS

	Compal Electronics, Inc.	
	Title: Reserve for PWR	
Size	Document Number	Rev 1.0
Date: Thursday, June 20, 2019	Sheet 99 of 100	

Version Change List (P. I. R. List)

Item	Page#	Date	Request Owner	Issue Description	Solution Description	Rev.
1.	P84-PWR_CHARGER	2018 06/12	Compal	Vendor suggest	Change the PRB11 from 2Ohm to 1Ohm	X01
2.	P84-PWR_CHARGER	2018 06/12	Compal	Downsize	Change the PCB06 and PCB18 to 0.47U_0402	X01
3.	P84-PWR_CHARGER	2018 06/12	Compal	Vendor suggest	Change the PCB11 to 0.33U	X01
4.	P89-PWR_CPU_Stage	2018 06/14	Compal	Downsize	PCA07, PCG09, PCI09, PCI29 change to 0.47U_0402	X01
5.	P92-PWR_ VGA_CORE(ISL62771)	2018 06/14	Compal	Downsize	Change PCV30 to 0.15U_0402 Change PCV32 to 0.1U_0402	X01
6.	P86-PWR_1.2V_DDR	2018 07/05	Compal	Factory suggest	Change the PDM01 to SCS00000Z00	X01
7.	P83-BATT CONN	2018 07/05	Compal	ESD request	Change the PD5,PD6 to SCA00002A00	X01
8.	P84-PWR_CHARGER	2018 07/09	Compal	Modify for AC detect	Change the PRB10 from 47K to 52.3K	X01
9.	P90-PWR_CPU MLCC	2018 07/09	Compal	Change for PI simulat i on	move PCI134,PCI135,PCI136,PCI137,PCI138, PCI139,PCI140 to +VCC_CORE_GT	X01
10.	P84-PWR_CHARGER	2018 07/11	Compal	Factory request	Add PCB71, PCB07 change to 1U_0402	X01
11.	P92-PWR_VGA_CORE	2018 07/17	Compal	Downsize	Change the PCV30 to SE000011G00 0.15U 16V	X01
12.	P88-PWR_CPU	2018 07/17	Compal	Change for CPU EA test	Change the PRZ25, PRZ29 to SD014100380 100K Change the PRZ23 to SD034255200 25.5K	X01

Only for Dell

DELL CONFIDENTIAL/PROPRIETARY

THIS SHEET OF ENGINEERING DRAWING IS THE PROPRIETARY PROPERTY OF COMPAL ELECTRONICS, INC. AND CONTAINS CONFIDENTIAL AND TRADE SECRET INFORMATION. THIS SHEET MAY NOT BE TRANSFERED FROM THE CUSTODY OF THE COMPETENT DIVISION OF R&D DEPARTMENT EXCEPT AS AUTHORIZED BY COMPAL ELECTRONICS, INC. NEITHER THIS SHEET NOR THE INFORMATION IT CONTAINS

Compal Electronics, Inc.

Title: PWR P.I.R

Size | Document Number | Rev 1.0

Date: Thursday, June 20, 2019 | Sheet 100 of 100

Version Change List (P. I. R. List)

Only for Dell

Security Classification	Compal Secret Data		
Issued Date	2019/06/20	Deciphered Date	2020/06/30

THIS SHEET OF ENGINEERING DRAWING IS THE PROPRIETARY PROPERTY OF COMPAL ELECTRONICS, INC. AND CONTAINS CONFIDENTIAL AND TRADE SECRET INFORMATION. THIS SHEET MAY NOT BE TRANSFERED FROM THE CUSTODY OF THE COMPETENT DIVISION OF R&D DEPARTMENT EXCEPT AS AUTHORIZED BY COMPAL ELECTRONICS, INC. NEITHER THIS SHEET NOR THE INFORMATION IT CONTAINS MAY BE USED BY OR DISCLOSED TO ANY THIRD PARTY WITHOUT PRIOR WRITTEN CONSENT OF COMPAL ELECTRONICS, INC.

Compal Electronics, Inc.

Title: **EE Change list**

Size | Document Number: **LA-G716P** | Rev: 1.0

Date: Thursday, June 20, 2019 | Sheet 101 of 101